# KORG MS-20

## 1. SPECIFICATIONS

<CONTROL SECTION>

| | |
|---|---|
| 1. Keyboard | • C~C 37 keys (3 octaves) |
| 2. Voltage controlled oscillator 1 | • Scale (32', 16', 8', 4') (6 octaves, + cent, − cent)<br>• Wave form ( ∧, ◺, PW ( ⊓⊔ ~ ⊓⊔ ), white noise) (4 modes)<br>• Pulse width adjust 1 : 1 ~ 1 : ∞ |
| 3. V.C.O.2 | • Scale (16', 8', 4', 2') (6 octaves, + cent, − cent)<br>• Wave form ( ◺, ⊓⊔, ⊓⊔, ring modulator) (4 modes)<br>• Pitch (±1 OCTAVES) |
| 4. V.C.O. master control | • Master tune (±100 cent)<br>• Portamento (max. 00 sec)<br>• Frequency modulation intensity by MG/T. EXT (±5V)<br>• Frequency modulation intensity by EG1/EXT (+5V) |
| 5. V.C.O. mixer | • V.C.O.-1 level<br>• V.C.O.-2 level |
| 6. Voltage controlled high pass filter | • Cutoff frequency (50Hz~15,000Hz)<br>• Peak (flat~self OSC)<br>• Cutoff frequency modulation intensity by MG/T.EXT (−5V ~ +5V)<br>• Cutoff frequency modulation intensity by EG2/EXT (−5V ~ +5V) |
| 7. Voltage controlled low pass filter | • Cutoff frequency (50Hz~15,000Hz)<br>• Peak (flat~self OSC)<br>• Cutoff frequency modulation intensity by MG/T.EXT (−5V ~ +5V)<br>• Cutoff frequency modulation intensity by EG2/EXT (−5V ~ +5V) |
| 8. Envelope generator 1 | • Delay time (10 sec)<br>• Attack time (10 sec)<br>• Release time (10 sec) |
| 9. Envelope generator 2 | • Hold time (20 sec)<br>• Attack time (10 sec)<br>• Decay time (10 sec)<br>• Sustain level (0~5V)<br>• Release time (10 sec) |
| 10. Modulation generator | • Wave form ( ◺ ~ ∧ ~ ◿, ⊔⊓ ~ ⊓⊔ ~ ⊔⊓ )<br>• Frequency (1 : 1 ~ 1 : 80) |
| 11. Manual controller | • Control wheel (center click) (0.1Hz ~ 20Hz)<br>• Momentary switch ⊤GND |
| 12. P. Switch and volume | • Volume |
| 13. Indicator | • LED (KBD trigger, MG rate) |

<EXTERNAL SIGNAL PROCESSOR>

| | |
|---|---|
| 1. Control section | • Input signal level (0dB max.)<br>• Low cut frequency (50 ~ 2,500Hz)<br>• High cut frequency (100 ~ 5,000Hz)<br>• CV adjust<br>• Threshold level |
| 2. Input and output | • Signal In (auto pad system) (1.0 ~+ 14.0V)<br>• Amplifier Out<br>• Band pass filtered Out<br>• CV Out (F ∞ V) (0 ~ +8.4V)<br>• ENV Out (0 ~ +5V)<br>• Trig Out (+5V ⊤GND) |
| 3. Indicator (LED) | • Peak indicator<br>• Trigger indicator |

<PATCH PANEL>

| | |
|---|---|
| 1. Keyboard | • Keyboard control voltage output (exponential) (0~+8V)<br>• Keyboard trigger output (+5V ⊤GND)<br>• VCO-1 + VCO-2 control voltage input (linear response) (0~+8V)<br>• VCO-2 control voltage input (linear response) (0 ~ 8V) |
| 2. VCO | • VCO-1 + VCO-2 external frequency control input (OCT/V) (+5V −5V) |
| 3. VCF | • External signal input (3Vp-p max.)<br>• External HP filter cutoff frequency control input (2OCT/V) (−5V~+5V)<br>• External LP filter cutoff frequency control input (2OCT/V) (−5V~+5V) |
| 4. VCO + VCF | • Total external modulation input (T. ext) (−5~+5V) |
| 5. VCA | • External initial gain control input (0~+5V) |
| 6. EG | • EG 1 envelope signal normal output (−5V 0V)<br>• EG 1 envelope signal reverse output (+5V 0V)<br>• EG 1 + EG 2 trigger input (⊤GND)<br>• EG 1 trigger input (⊤GND)<br>• EG 2 envelope signal reverse output (0V) |
| 7. MG | • Triangle output (◺~∧~◿) (5Vp-p 0V)<br>• Rectangle output (⊔⊓ ~ ⊓⊔ ~ ⊔⊓) (⊔⊓ 5V 0V) |
| 8. Noise generator | • Pink noise output (5Vp-p ±20)<br>• White noise output (5Vp-p ±20) |
| 9. Sample and hold | • Clock trigger input (⊤GND)<br>• Sample signal input (5Vp-p max.)<br>• S/H output (5Vp-p max.) |
| 10. Modulation VCA | • Control voltage input (0~+5V)<br>• Signal input (−5V~+5V)<br>• Signal output (−5V~+5V) |
| 11. Manual controller | • Control wheel output (−5V ← 0V → +5V)<br>• Momentary switch output (⊤GND) |
| 12. Signal out | • Signal output (2Vp-p output impedance 3.5kΩ) |
| 13. Head phones | • Head phones output ((8Ω) 120m watts 5.6) |
| 14. Power consumption | • 10 watts |
| 15. Dimensions | • 569(W) x 309(D) x 249(H) mm |
| 16. Weight | • 7.7 kgs |
| 17. Accessories | • Patch cord, connection cord (35 cm x 2, 3 m x 1) |
| 18. Options | • Stand, hard case, foot pedal (MS-01)<br>• Junction box (MS-02) |

# KORG MS-20

## 2. STRUCTURAL DIAGRAM

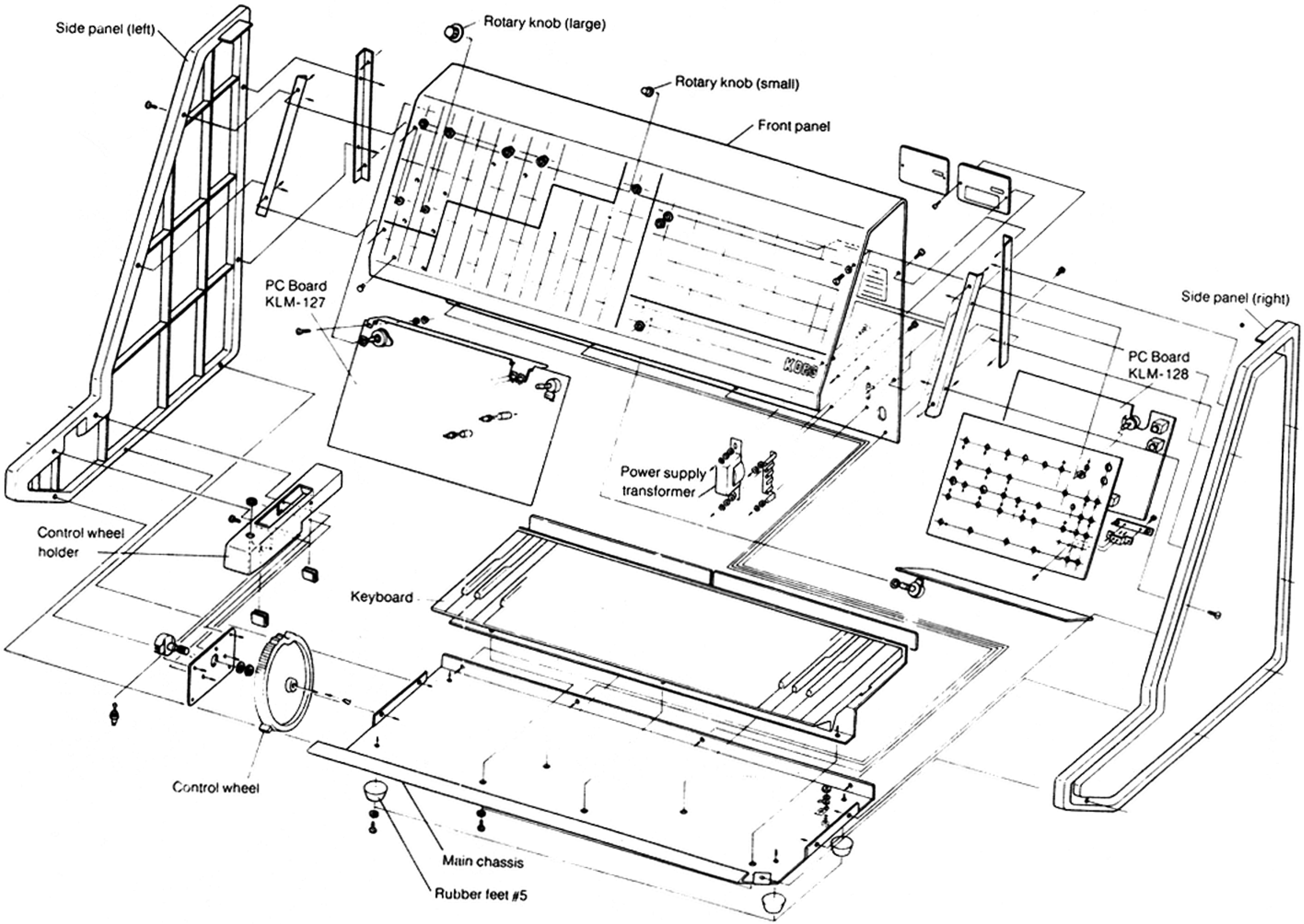

# KORG MS-20

## 3. CIRCUIT DIAGRAM (1)

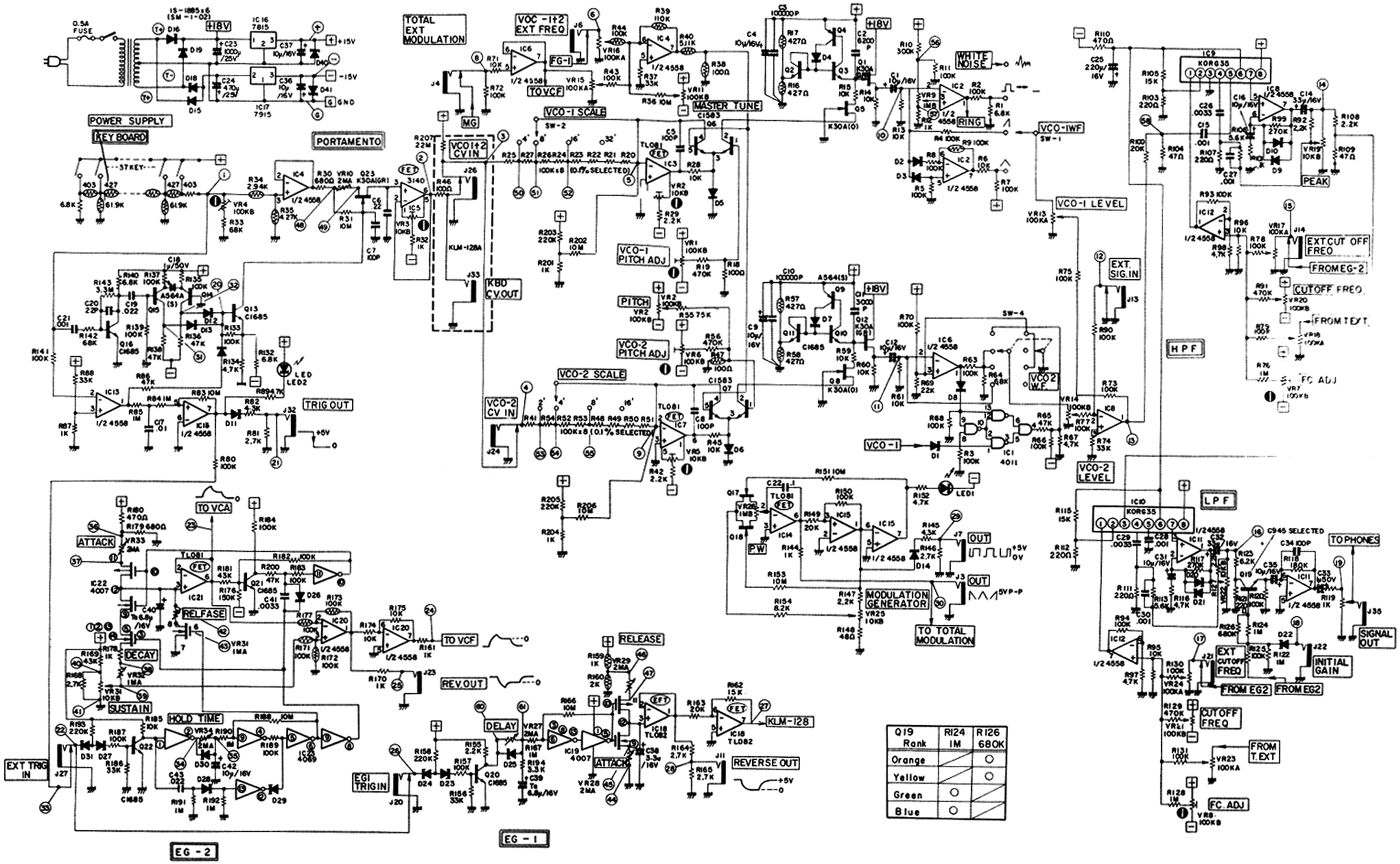


| Q19 Rank | R124 1M | R126 680K |
|---|---|---|
| Orange | | ○ |
| Yellow | | ○ |
| Green | ○ | |
| Blue | ○ | |

# KORG MS-20

## CIRCUIT DIAGRAM (2)

KLM-128

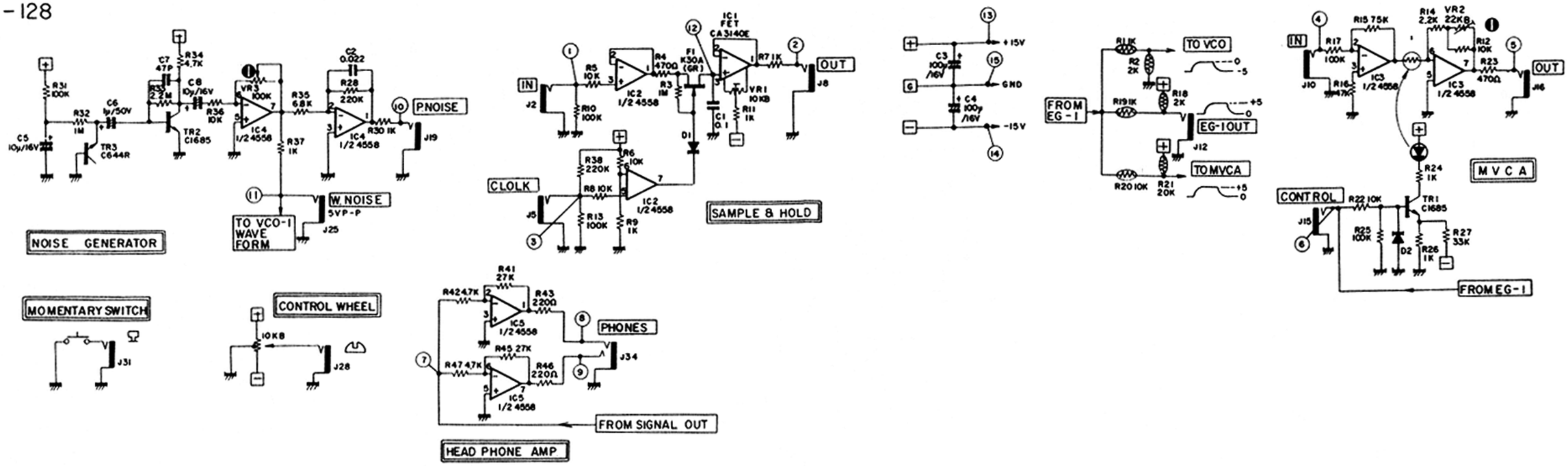


KLM-129

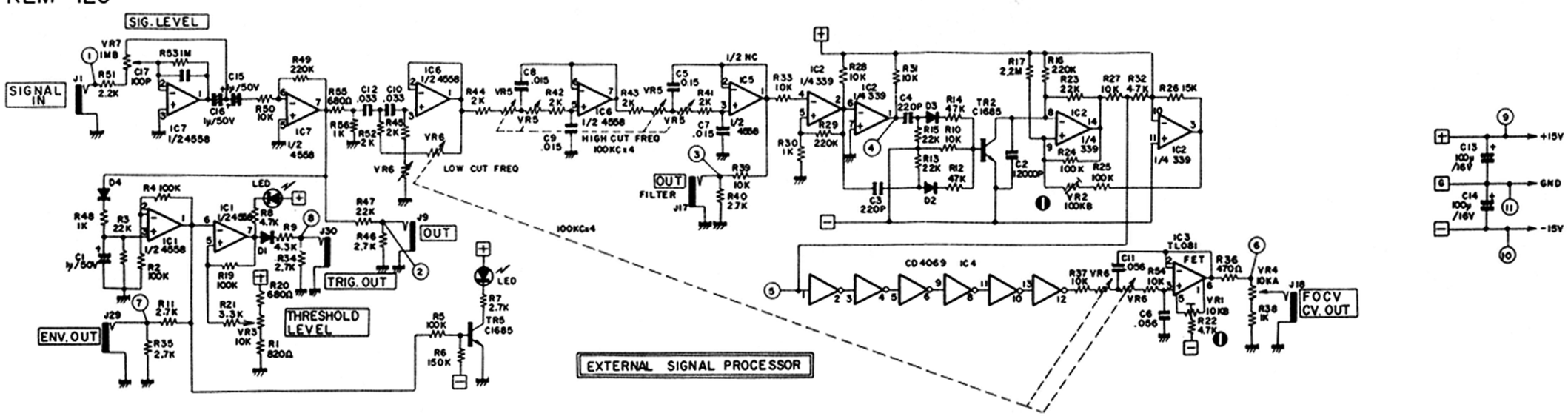

# KORG MS-20

## 4. FRONT VIEW OF PRINTED CIRCUIT BOARD KLM-127

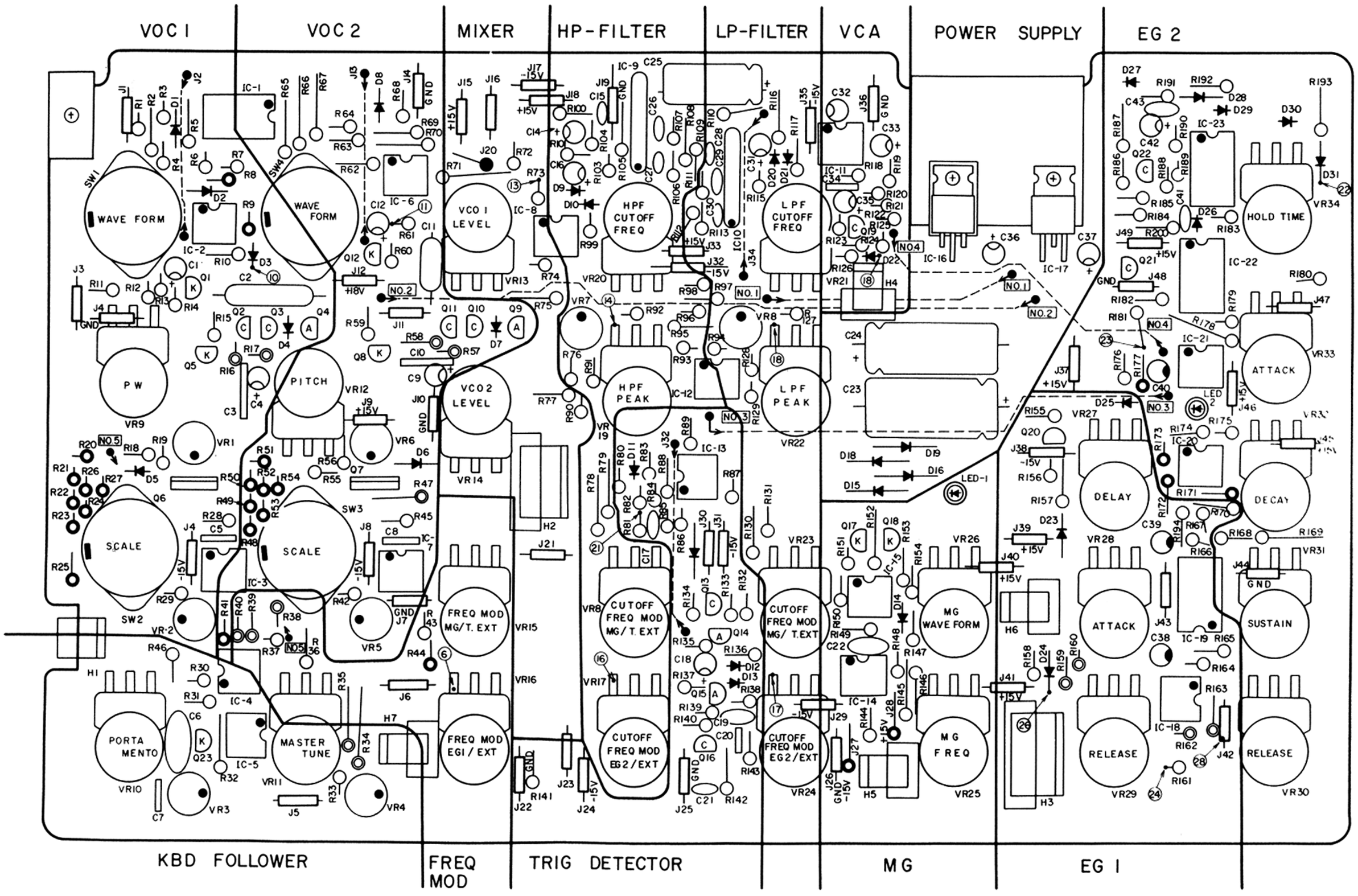

# KORG MS-20

## FRONT VIEW OF PRINTED CIRCUIT BOARD KLM-128C

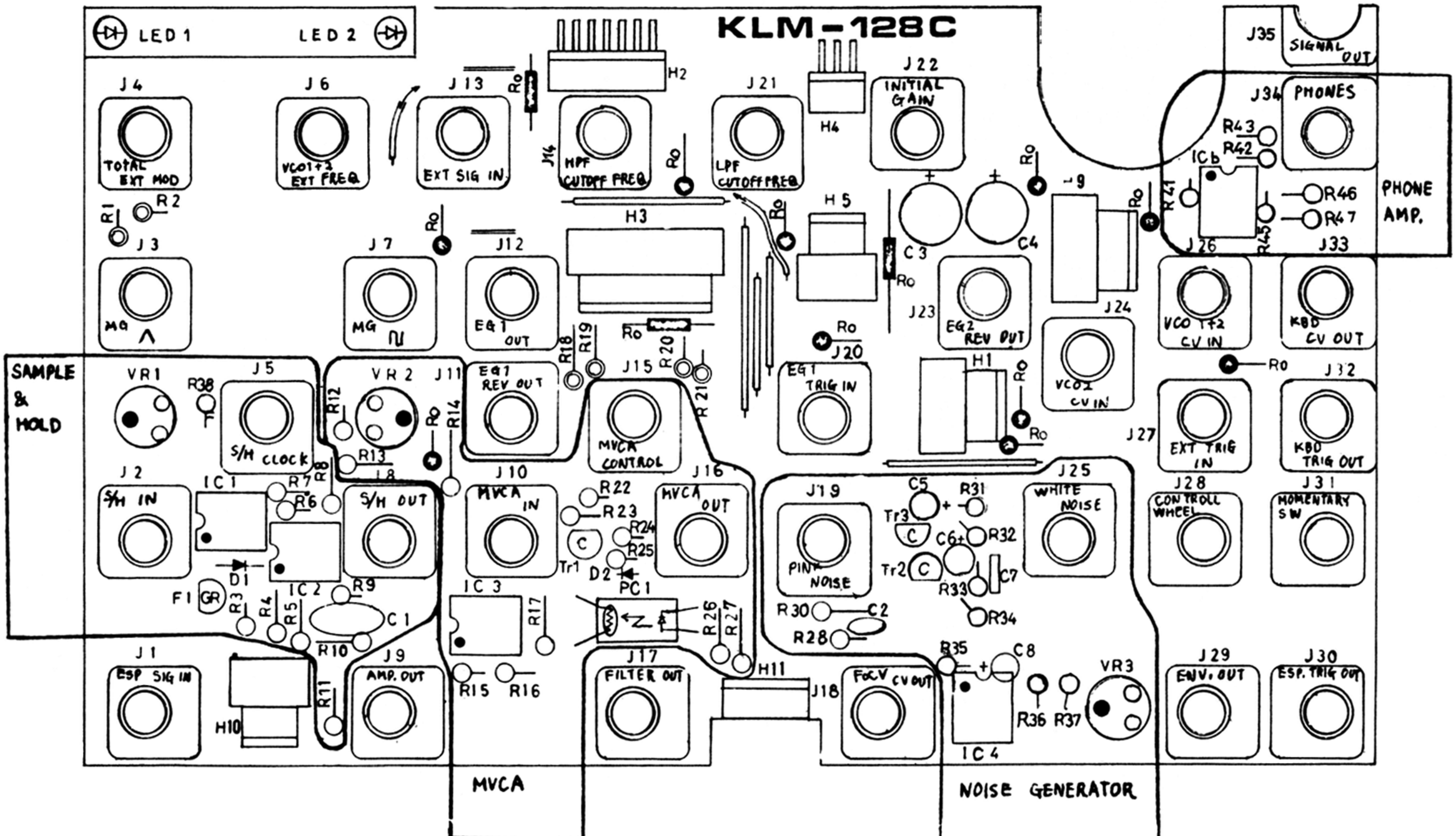

# KORG MS-20

## 5. PARTS LIST

(Mechanical parts not listed)

**●CARBON RESISTORS**
not listed

**●METAL FILM RESISTORS**

| | | |
|---|---|---|
| 1/4W 1% 100Ω | x | 2 |
| 1/4W 1% 403Ω | x | 18 |
| 1/4W 1% 427Ω | x | 22 |
| 1/4W 1% 1kΩ | x | 3 |
| 1/4W 1% 2kΩ | x | 3 |
| 1/4W 1% 2.94kΩ | x | 1 |
| 1/4W 1% 4.27kΩ | x | 1 |
| 1/4W 1% 10kΩ | x | 1 |
| 1/4W 1% 15kΩ | x | 1 |
| 1/4W 1% 20kΩ | x | 2 |
| 1/4W 1% 61.9kΩ | x | 17 |
| 1/4W 1% 100kΩ | x | 23 |
| 1/4W 1% 110kΩ | x | 1 |
| 1/4W 1% 5.11kΩ | x | 1 |

**●SOLID RESISTORS**

| | | |
|---|---|---|
| 1/4W 10% 10MΩ | x | 7 |

**●MYLAR CAPACITORS**
not listed

**●STYROL CAPACITORS**

| | | |
|---|---|---|
| 50V-12000pF | x | 1 |

**●CERAMIC CAPACITORS**

| | | |
|---|---|---|
| 50V-56pF | x | 1 |
| 50V-22pF | x | 1 |
| 50V-100pF | x | 5 |
| 50V-220pF | x | 2 |
| 50V-47pF | x | 1 |
| 25V-100000pF | x | 2 |

**●TANTALUM CAPACITORS**

| | | |
|---|---|---|
| 16V-3.3μF | x | 1 |
| 16V-6.8μF | x | 2 |

**●ELECTROLYTIC CAPACITORS**

| | | |
|---|---|---|
| 16V-10μF | x | 12 |
| 16V-33μF | x | 2 |
| 16V-100μF | x | 4 |
| 50V-1μF | x | 6 |
| 25V-470μF | x | 1 |
| 25V-10000μF | x | 1 |
| 16V-220μF | x | 1 |

**●POLYSTYRENE CAPACITORS**

| | | |
|---|---|---|
| 50V-3000pF | x | 1 |
| 50V-6200pF | x | 1 |

**●POLYPROPPYLENE CAPACITORS**

| | | |
|---|---|---|
| 200V-0.22μF | x | 1 |

**●TRANSISTORS**

| | | |
|---|---|---|
| 2SA-564(S) | x | 4 |
| 2SC-945(L)K | x | 1 |
| (special selected) | | |
| 2SC-1583G | x | 2 |
| 2SC-1685S | x | 13 |
| 2SC-644R | x | 1 |

**●FET**

| | | |
|---|---|---|
| 2SK-30(O) | x | 4 |
| 2SK-30(GR) | x | 4 |

**●DIODES**

| | | |
|---|---|---|
| 1S-1555 | x | 33 |

**●LED**

| | | |
|---|---|---|
| GD4-203RD | x | 4 |

**●PHOTOCOUPLER**

| | | |
|---|---|---|
| HTV-P873-G35-201B | x | 1 |

**●IC**

| | | |
|---|---|---|
| μPC-4558C | x | 17 |
| 081 | x | 5 |
| TL-(071) | | |
| (3140) | | |
| 082 | x | 1 |
| TL-(072) | | |
| (3140) | | |
| MC-14007 | x | 2 |
| MC-14069B | x | 2 |
| μPD4011C | x | 1 |
| μPC339C | x | 1 |
| μPC14315 | x | 1 |
| μA79M15 | x | 1 |
| KORG35 | x | 2 |

**●SEMI-FIXED RESISTORS**

| | | |
|---|---|---|
| SR19R(10kB) | x | 6 |
| SR19R(100kB) | x | 7 |

**●ROTARY VARIABLE RESISTORS**

| | | |
|---|---|---|
| 10KB | x | 4 |
| 100KA | x | 8 |
| 100KA | x | 4 |
| 1MB | x | 2 |
| 2MA | x | 6 |
| 1MA | x | 2 |
| Printed 10KA | x | 1 |
| Printed 10KB | x | 1 |
| Printed 1MB | x | 1 |
| Printed 4-ganged 100KC | x | 1 |
| 24φ 10KB | x | 1 |
| Center click-stop 10KB | x | 1 |

**●ROTARY SWITCH**

| | | |
|---|---|---|
| SRM-1034 1-15mm | x | 4 |

**●KEYBOARD**
ESK-431 37 key

**●TERMINAL LUG BOARD**

| | | |
|---|---|---|
| 2L4P | x | 1 |

**●PUSH SWITCH**

| | | |
|---|---|---|
| MS-102 | x | 1 |

**●CONNECTORS**

| | | |
|---|---|---|
| 3P | x | 6 |
| 4P | x | 2 |
| 5P | x | 2 |
| 7P | x | 1 |
| 8P | x | 2 |
| 3P | x | 3 |
| 5P | x | 1 |

Female Connectors

| | | |
|---|---|---|
| 3P | x | 10 |
| 4P | x | 2 |
| 5P | x | 3 |
| 7P | x | 2 |
| 8P | x | 2 |

# KORG MS-20

## 6. BLOCK DIAGRAM

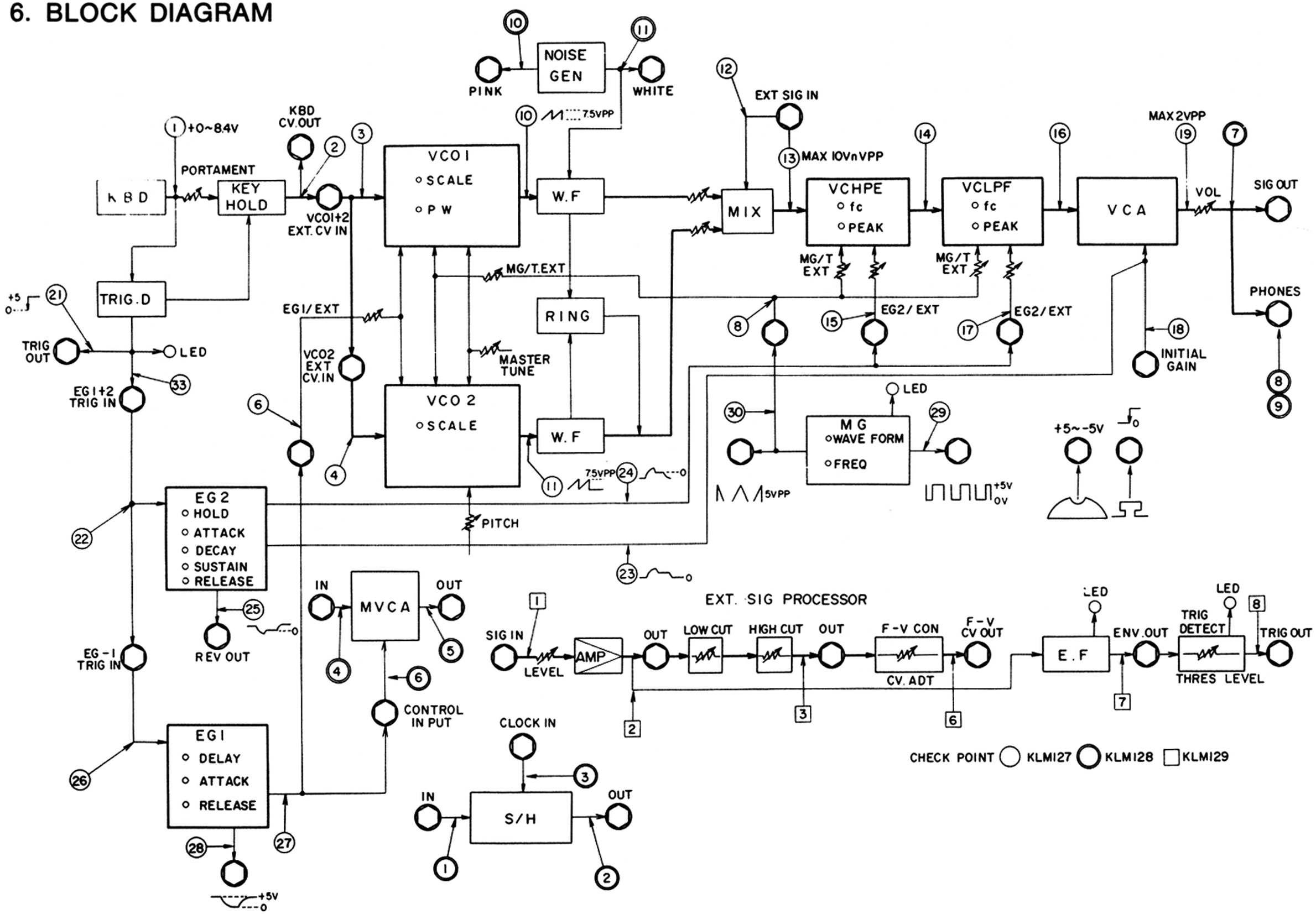

# KORG MS-20

## 7. ADJUSTMENT PROCEDURE

### 7-1 Power supply check

1. Positive ripple.
   Should be no more than 2mVp-p.
   Set oscilloscope vertical gain at 10mV/cm and check that power supply ripple is 2mV or less.
2. Negative ripple.
   Same as positive, should be no more than 2mVp-p.

### 7-2. Pitch adjustment

1. VCO-1.
   Perform adjustment with synthesizer controls at "normal setting" (Scale=8, Waveform= ⊓⊔ , Master Tune, Pitch, and all other knobs at "0"). See figure 1.
   a. Play C-4 (high C) on the keyboard and adjust the high ❶ semi-fixed screw until you obtain the correct tuning as indicated by WT-10A (connected to the SIG OUT jack).
   b. Play key C-1 and adjust the low ❷ semi-fixed screw.
   c. Repeat steps a and b as many times as necessary until both are tuned to the correct pitch.
   d. Check the tuning of C-1, C-2, C-3, and C-4 on the WT-10A meter to make sure pitch deviation is within ±2 cents for each.
   e. Change the scale to 32′, 16′, 8′, and 4′ and check the tuning of all four C keys to make sure that the pitch deviation of each is within ±10 cents.
2. VCO-2.
   Set the VCO-1 level at "0" and the VCO-2 level at "10". Then follow the same procedure as for VCO-1, by adjusting the high ❸ and low ❹ semi-fixed screws.

### 7-3. KBD CV adjustment

Use a 4-1/2 digital voltmeter to measure the KBD CV OUT signal.

a. Measure output voltage first when you play key C-4, then when you play key C-3. The output voltage for C-3 should be exactly half that for C-4. Adjust the KBD CV high ❺ semi-fixed screw as necessary so that C-3 produces half the voltage of C-4.

b. Measure C-2 and then C-1 in the same way. Adjust the KBD CV low ❻ semi-fixed screw as necessary so that C-2 produces exactly half the voltage of C-4.

c. Repeat steps a and b as many times as necessary until the output voltage of each of C-1, C-2, C-3, and C-4 is exactly half that of the next.

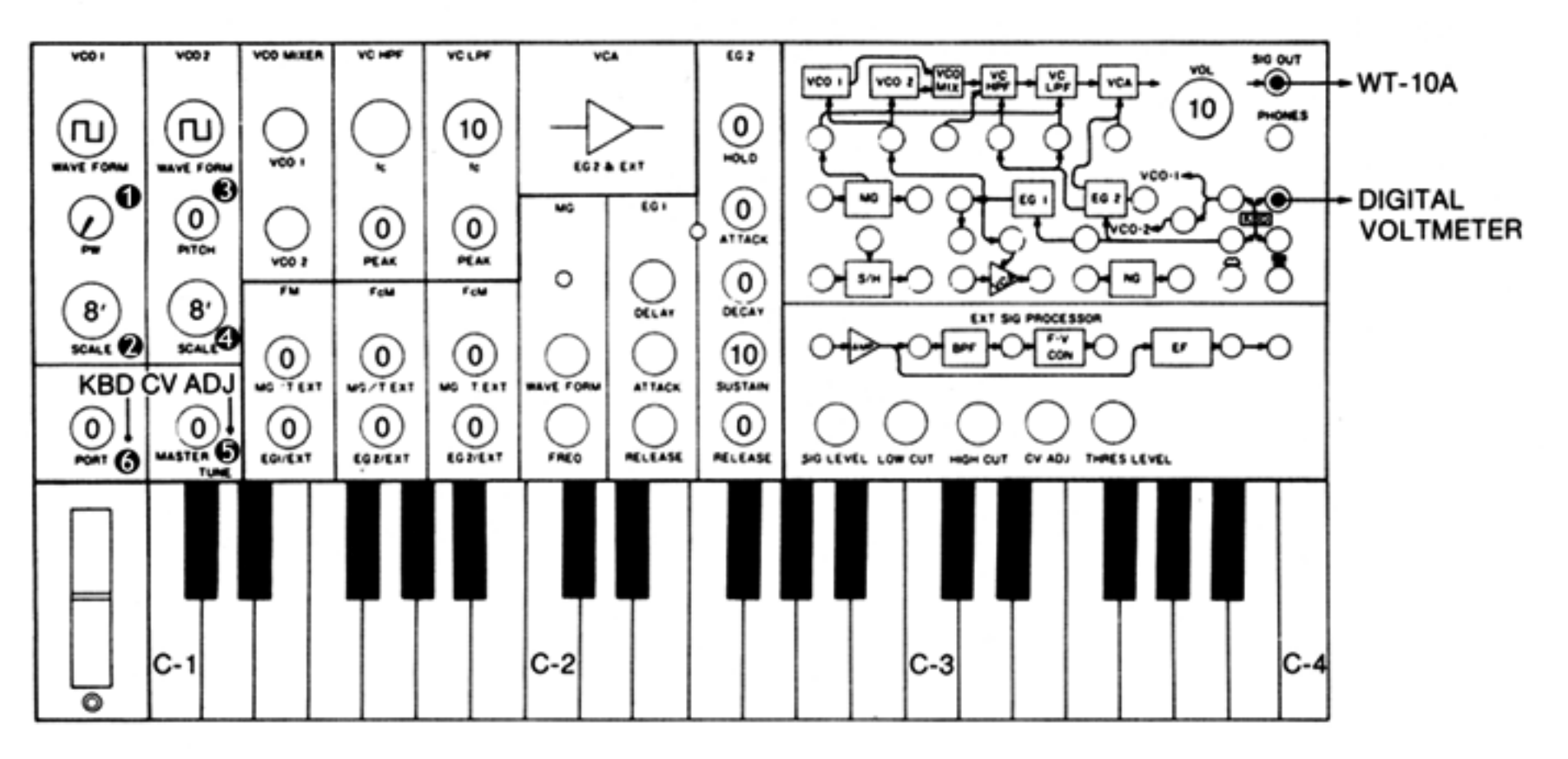


Fig. 1

### 7-4. VCF Fc adjustment

Connect a frequency counter to the PHONES jack (since a high output level is needed for measurement). Set VCO-1 and VCO-2 level at "0".

1. VC HPF
   Refer to the settings shown in figure 2. Set the LPF PEAK knob at "0", and the HPF PEAK knob at "10". Then adjust the ❶ semi-fixed screw as necessary so that the HPF oscillation frequency is 500Hz.
2. VC LPF
   Set HPF PEAK at "0", and LPF PEAK at "10". Then adjust the ❷ semi-fixed screw in the same way as you did for the HPF.

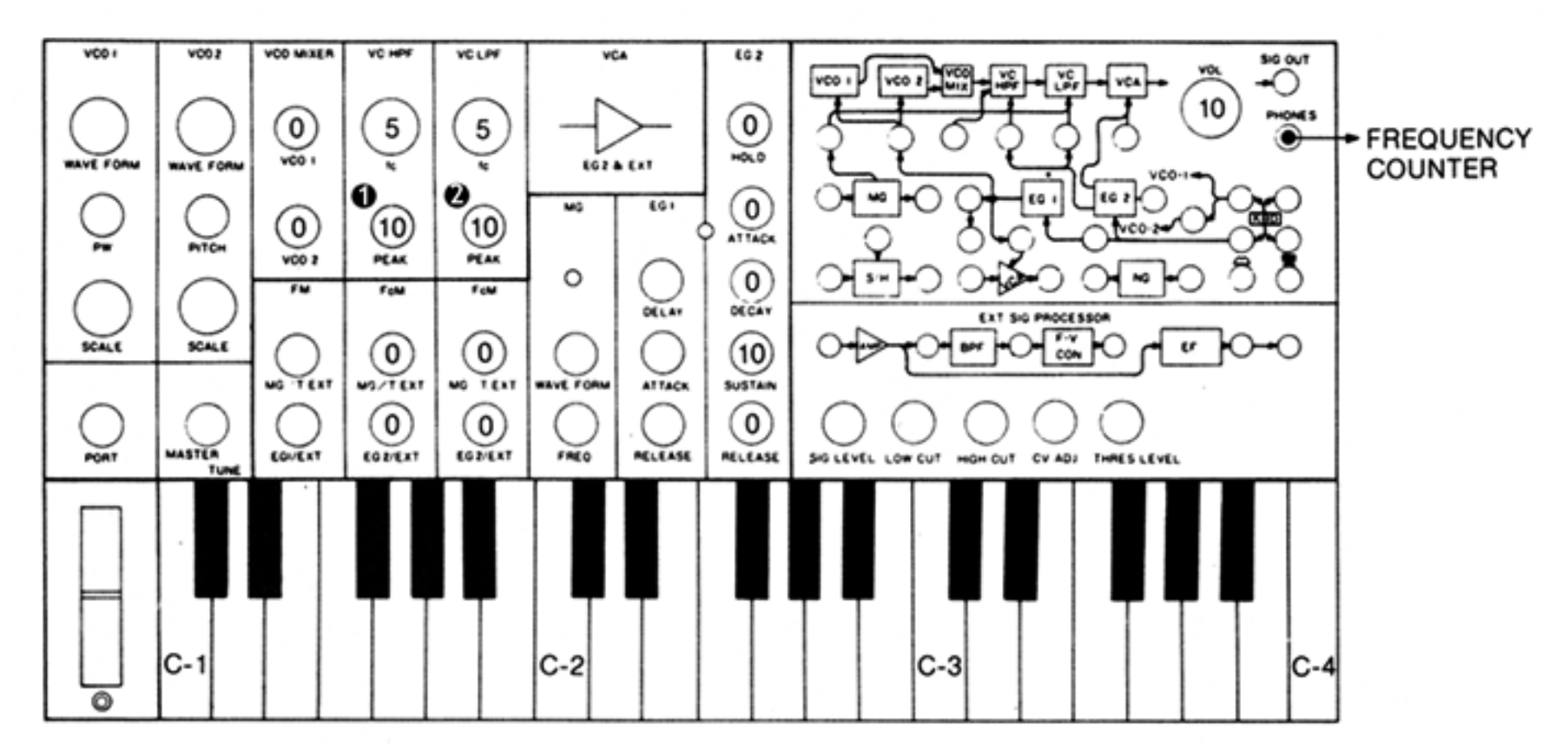


Fig. 2