Tone Control Circuits

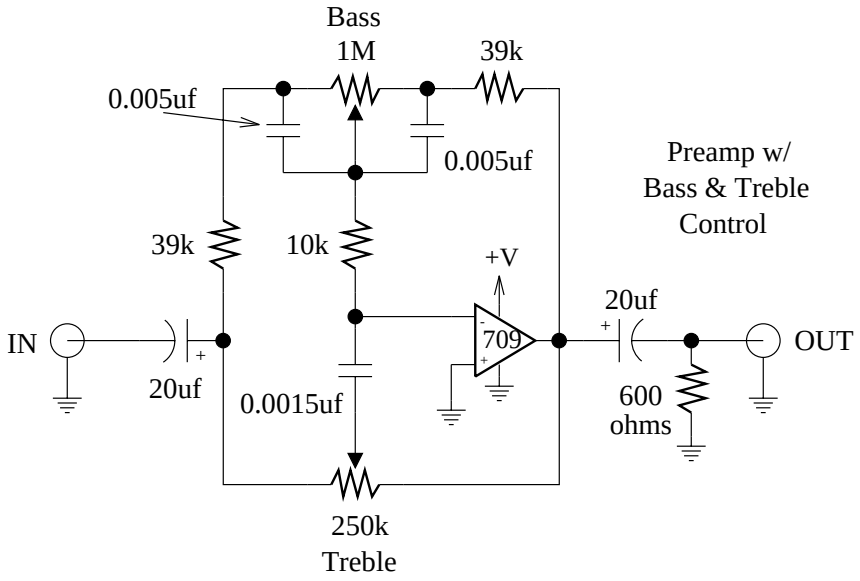

Both of these circuits provide some additional control over tone. They were origionally intended for use with synth modules but could be easily incorporated into most any effects circuit.

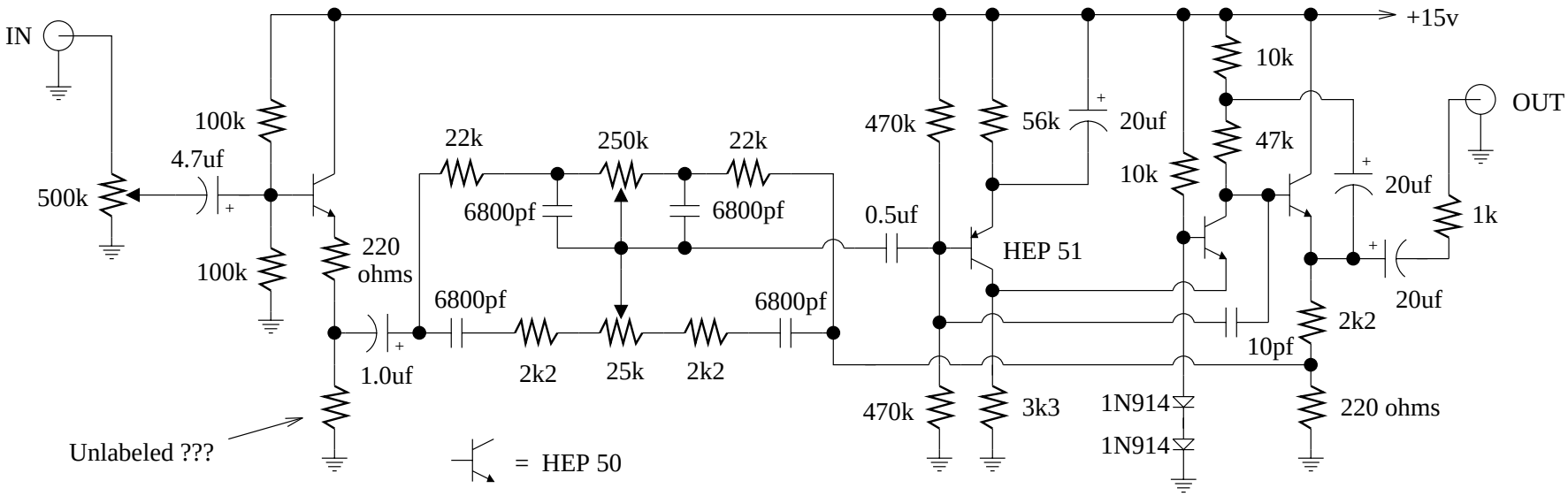

Tone Control circuit with signal isolation and impedance-matching stages.