Low-cost dual, quad FET op amps implement complex functions

Multiple general-purpose FET op amps in one package offer more than basic gain and control capabilities. By fully exploiting their high-performance potential, you can derive a variety of low-cost special-purpose circuits.

Jim Williams, National Semiconductor Corp

FET op amps in dual and quad packages furnish the same performance as their single-op-amp relatives, but they cost less per amplifier, occupy less board area and require fewer bypass capacitors and power-supply buses. To show you how to implement these advantages effectively, this article examines temperature-control, sine-wave-oscillator and A/D-converter circuit designs that each utilize one dual or quad FET op-amp package.

Controller maintains stable temperature

Fig 1, for example, shows a complete high-efficiency pulse-width-modulating oven-temperature controller. A single LF347 package contains the four op amps shown (A_1 through A_4).

A_1 functions as an oscillator whose output (**Fig 2**, trace A) periodically resets integrator A_2's output

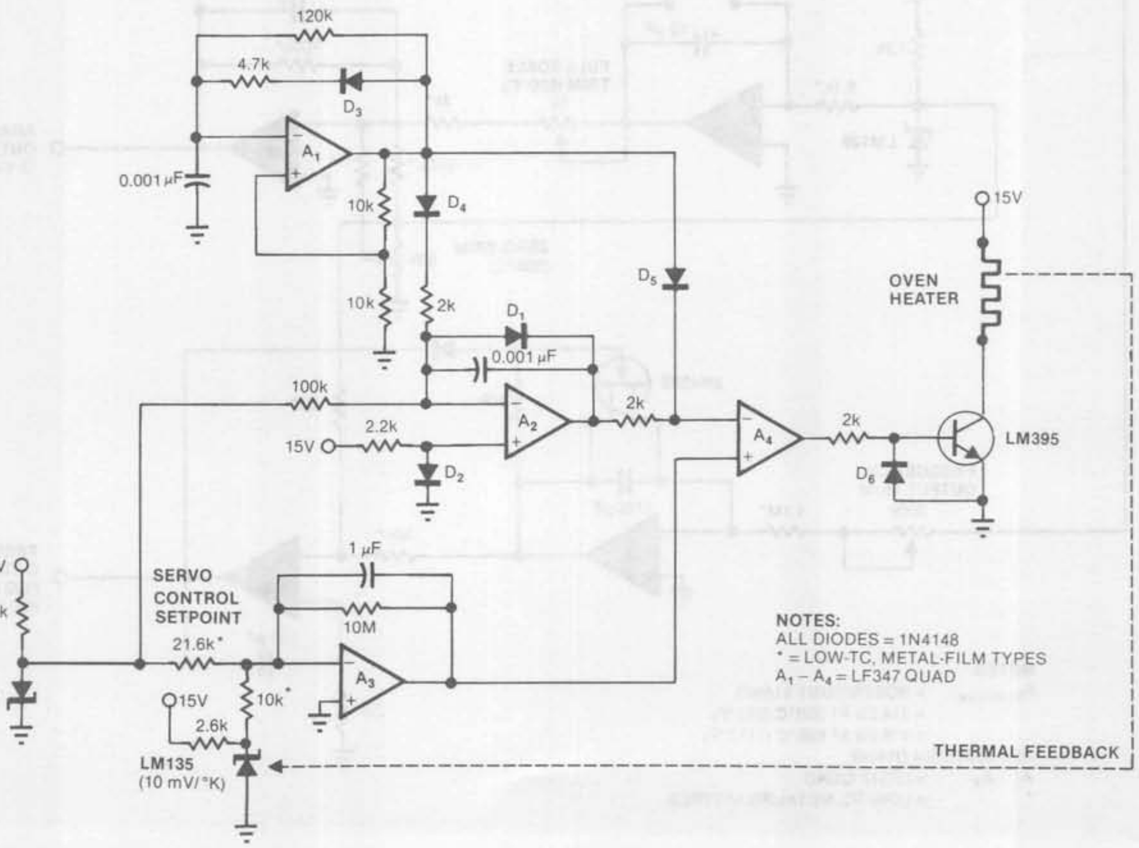

NOTES:
ALL DIODES = 1N4148
* = LOW-TC, METAL-FILM TYPES
$A_1 - A_4$ = LF347 QUAD

Fig 1—Connecting appropriate components *to an LF347 quad FET-op-amp IC produces a high-efficiency precision oven-temperature controller. This design can hold a temperature within 0.05°C despite wide ambient-temperature fluctuations.*

(trace B) to 0V. Each time A_1's output goes high, a large positive current flows into A_2's summing junction. This current overcomes the negative current flowing through the 100-kΩ resistor into the LM329 reference. As a result, A_2's output heads negative, ultimately limited by D_1's feedback bound.

Diode D_2 provides bias at A_2's positive input to compensate for D_1. Accordingly, A_2's output settles close to 0V. When A_1's positive output pulse ends, the positive current into A_2's summing junction ceases. Then A_2's output ramps linearly until the next reset pulse.

A_3 operates as a current-summing servo amplifier that compares the currents derived from the LM135 temperature sensor and the LM329 reference. In this configuration, A_3 achieves a gain of 1000, and the 1-μF feedback capacitor permits a 0.1-Hz servo response. A_3's output represents the amplified difference between the LM135's temperature and the desired control setpoint. You can vary the setpoint by changing the

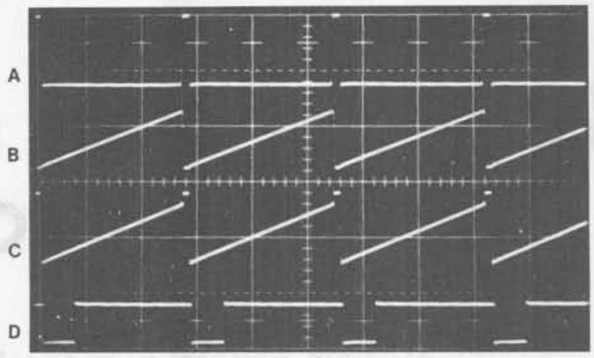

TRACE	VERTICAL	HORIZONTAL
A	20V/DIV	
B	10V/DIV	50 μSEC/DIV
C	10V/DIV	
D	20V/DIV	

Fig 2—Oven-controller waveforms *from* **Fig 1***'s circuit show A_1's oscillator output (trace A) and A_2's integrator output (B) as the latter resets periodically to 0V. Trace C displays A_4's ramp output, and D indicates the LM395's power input to the oven heater.*

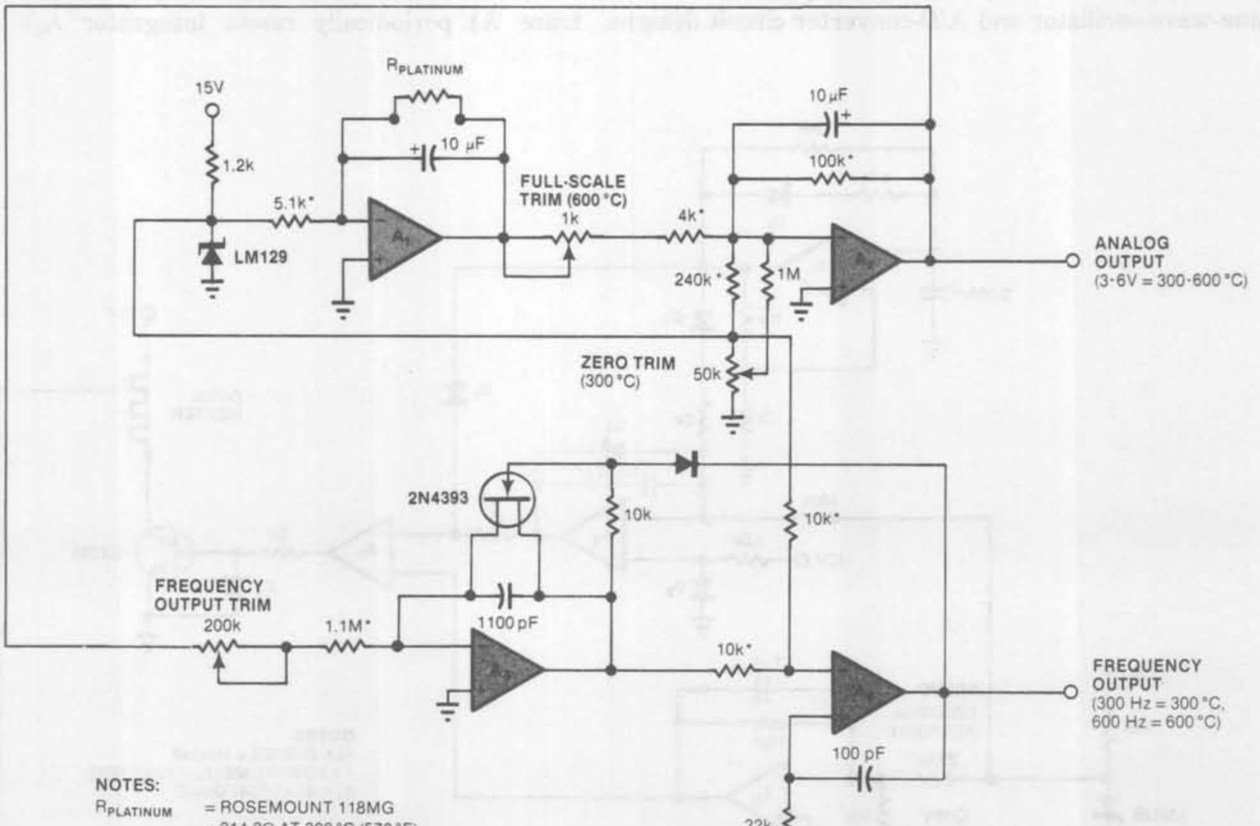

NOTES:
$R_{PLATINUM}$ = ROSEMOUNT 118MG
= 214.2Ω AT 300°C (572°F)
= 318.2Ω AT 600°C (1112°F)
ALL DIODES = 1N4148
$A_1 - A_4$ = LF347 QUAD
* = LOW-TC, METAL-FILM TYPES

Fig 3—Generate simultaneous analog-level and frequency outputs *using one LF347 package by signal-conditioning a platinum RTD sensor. You can calibrate this high-temperature (300 to 600°C) measuring circuit to ±1°C by using three trimming pots.*

21.6-kΩ resistor's value. In **Fig 1**'s version, the 21.6-kΩ resistor provides a setpoint of 49°C (322°K).

Configured as a comparator, A_4 measures A_3's output against A_2's ramp output. Specifically, A_4's output is high only when A_3's output exceeds the ramp voltage. The ramp-reset pulse from A_1 is diode summed with the ramp output (trace C) at A_4 to prevent A_4's output from going high during the reset-pulse period.

Additionally, A_4's output biases the LM395 power transistor, which switches power (trace D) to the heater. If you tightly couple the LM135 sensor to the heater and adequately insulate the oven, this controller circuit can easily hold a setpoint within 0.05°C over wide ambient-temperature excursions.

Sensor circuit generates dual outputs

Another temperature-related circuit employing one LF347 package appears in **Fig 3**. In this design, the LF347 op amps signal-condition a platinum RTD sensor and provide simultaneous analog-level and frequency outputs. These outputs stay accurate to ±1°C over 300 to 600°C (572 to 1112°F). Although the conditioning circuit can maintain linearity over an even wider range, the sensor's nonlinear response from 0 to 300°C limits overall accuracy (**Fig 4**).

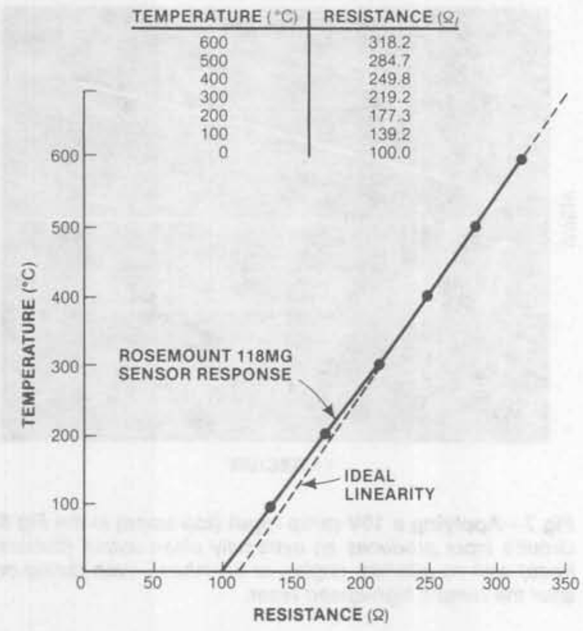

TEMPERATURE (°C)	RESISTANCE (Ω)
600	318.2
500	284.7
400	249.8
300	219.2
200	177.3
100	139.2
0	100.0

Fig 4—A platinum RTD sensor's resistance *decreases linearly from 600 to 300°C. Then, from 300 to 0°C, the sensor's resistance deviates from a straight-line slope and degrades the* ***Fig 3*** *circuit's accuracy beyond ±1°C.*

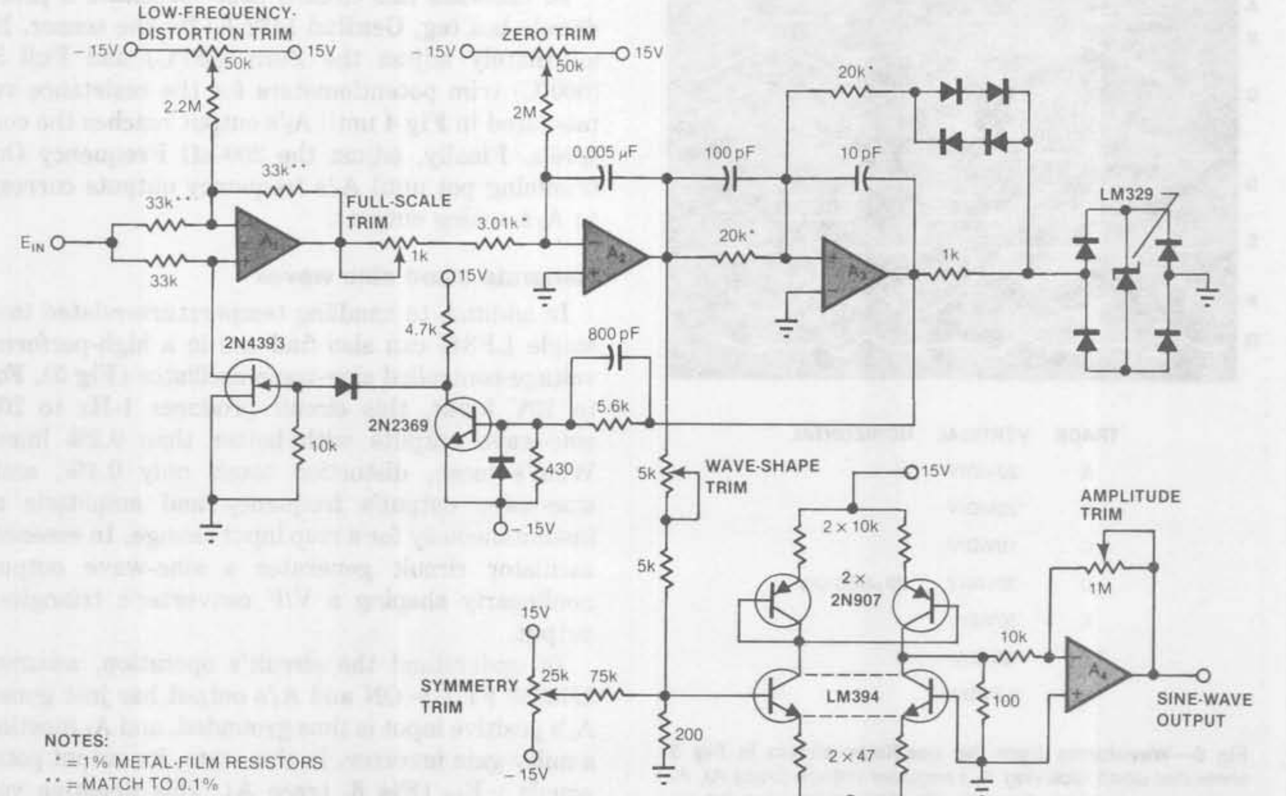

NOTES:
* = 1% METAL-FILM RESISTORS
** = MATCH TO 0.1%
ALL DIODES = 1N4148
$A_1 - A_4$ = LF347 QUAD

Fig 5—An LF347-based voltage-controlled sine-wave oscillator *combines high performance with versatility. For 0 to 10V inputs, this circuit generates 1-Hz to 20-kHz outputs with better than 0.2% linearity and only 0.4% distortion.*

Low-distortion oscillator generates clean sine waves

A_1 functions as a negative-gain inverter and drives a constant current through the platinum sensor. Both the LM329 and the 5.1-kΩ resistor supply the current reference. Because A_1 provides negative gain, the sensor's developed voltage remains extremely low and eliminates self-heating-induced errors.

A_1's output potential—which varies with the sensor's temperature—goes to A_2. In turn, A_2 furnishes scaled gain and offsetting to produce an analog output that ranges from 3 to 6V for a corresponding 300 to 600°C temperature swing at the sensor.

Performing as a voltage-to-frequency (V/F) converter, A_3 and A_4 generate a 300- to 600-Hz output from A_2's 3 to 6V analog output. A_3 integrates in a negative-going direction with a linear slope that depends on A_2's output voltage. Then A_4 compares A_3's negative ramp with the LM329's positive reference voltage by current-summing in the 10-kΩ resistors. When the ramp's negative potential barely exceeds the LM329's reference voltage, A_4's output goes positive. This action turns on the 2N4393 FET and resets A_3's integration process. At A_4, ac feedback causes "hang-up" in the positive state long enough to completely discharge A_3's integrator capacitor.

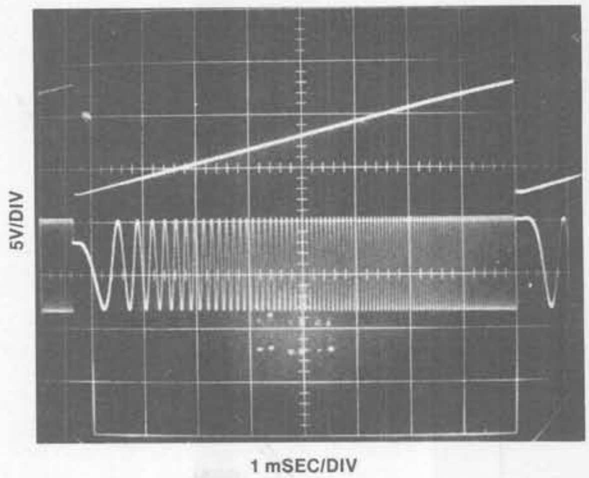

Fig 7—Applying a 10V ramp input (top trace) *to the* **Fig 5** *circuit's input produces an extremely clean output (bottom trace) with no glitches, ringing or overshoot, even during or after the ramp's high-speed reset.*

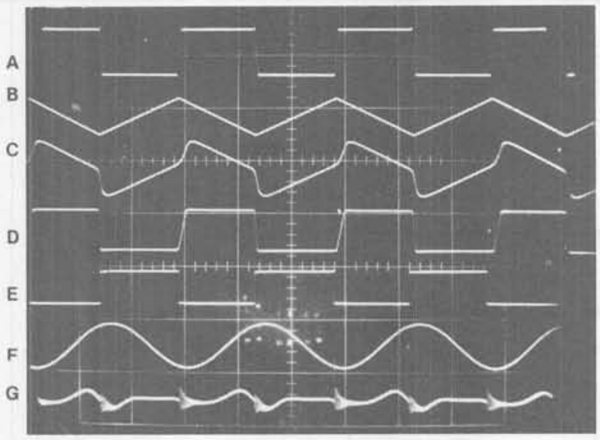

TRACE	VERTICAL	HORIZONTAL
A	20V/DIV	
B	20V/DIV	
C	10V/DIV	
D	20V/DIV	20 μSEC/DIV
E	50V/DIV	
F	2V/DIV	
G	0.2V/DIV	

Fig 6—Waveforms from the oscillator shown in Fig 5 *show that upon receiving A_1's negative voltage (trace A), A_2 ramps in a positive direction (B). This ramp joins the ac feedback delivered to A_3's positive input (C); trace D depicts A_3's positive-going output. This output in turn is inverted by the 2N2369 transistor (E), which turns off the 2N4393 and drives A_1's positive input above ground. A_2's triangle output also connects to four sine-shaper transistors and A_4 and finally emerges as the circuit's sine-wave output (F). A distortion analyzer's output (G) shows the circuit's minimum distortion products after trimming.*

To calibrate this circuit, first substitute a precision decade box (eg, GenRad 1432-K) for the sensor. Next, alternately adjust the Zero (300°C) and Full Scale (600°C) trim potentiometers for the resistance values tabulated in **Fig 4** until A_2's output reaches the correct levels. Finally, adjust the 200-kΩ Frequency Output trimming pot until A_4's frequency outputs correspond to A_2's analog outputs.

Generate clean sine waves

In addition to handling temperature-related tasks, a single LF347 can also find use in a high-performance voltage-controlled sine-wave oscillator **(Fig 5)**. For a 0 to 10V input, this circuit produces 1-Hz to 20-kHz sine-wave outputs with better than 0.2% linearity. What's more, distortion totals only 0.4%, and the sine-wave output's frequency and amplitude settle instantaneously for a step input change. In essence, the oscillator circuit generates a sine-wave output by nonlinearly shaping a V/F converter's triangle-wave output.

To understand the circuit's operation, assume the 2N4393 FET is ON and A_1's output has just gone low. A_1's positive input is thus grounded, and A_1 functions as a unity-gain inverter. In this state, its output potential equals $-E_{IN}$ **(Fig 6,** trace A). This negative voltage goes to integrator A_2, which responds by ramping in a positive direction (trace B). A_3 then compares this positive-going ramp to the LM329's 7V reference. The reference works within a symmetrically bounded positive feedback loop, within which the parallel diodes compensate the bridge diodes.

When the positive-going ramp voltage barely nulls

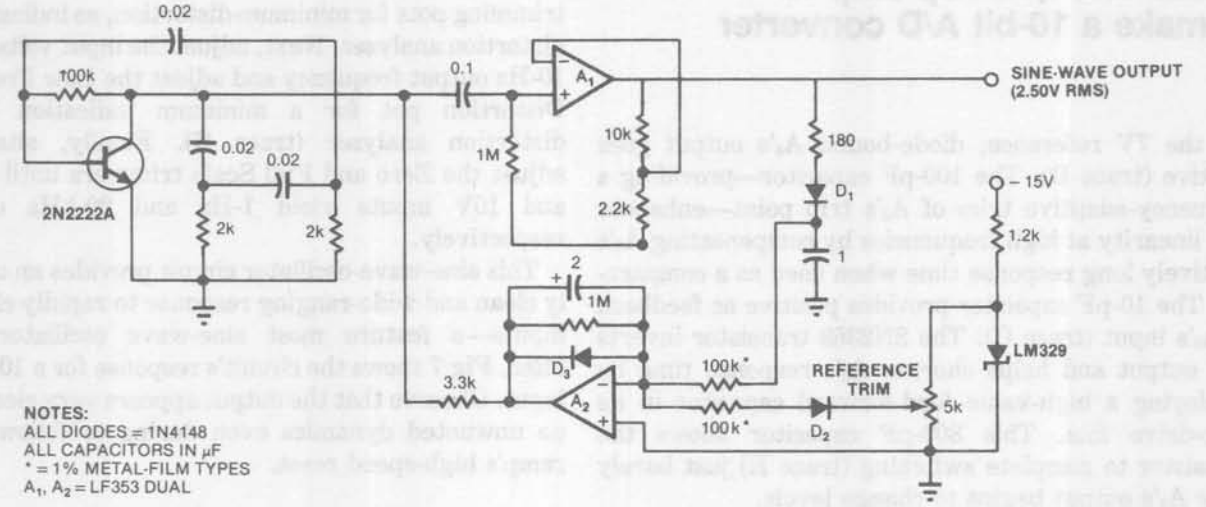

Fig 8—Reduce parts count and save money *by basing this precision sine-wave voltage reference on an LF353 dual FET-op-amp IC. This circuit generates a 1-kHz sine wave at 2.50V rms. The 2N2222A transistor functions as a phase-shift oscillator. The A_1, A_2 combination amplifies and amplitude-stabilizes the circuit's sine-wave output.*

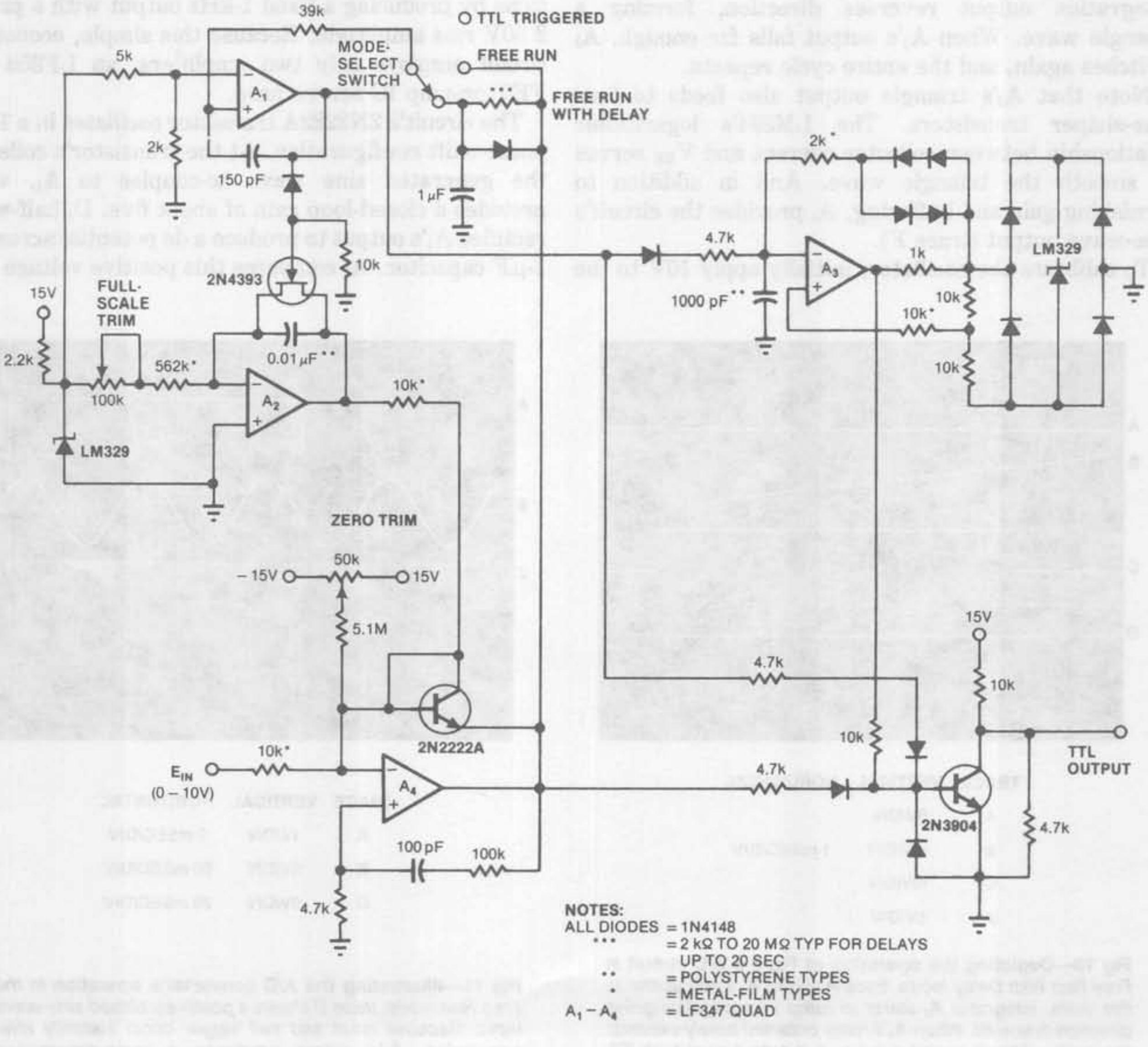

Fig 9—Three Mode Select switch positions *offer a choice of internal or external trigger conditions for this integrating A/D converter. Over 15 to 35°C, this trimmable converter provides a 10-bit serial output, converts in 10 msec and accepts 0 to 10V inputs.*

Utilize one quad op-amp IC to make a 10-bit A/D converter

out the 7V reference, diode-bound A_3's output goes positive (trace D). The 100-pF capacitor—providing a frequency-adaptive trim of A_3's trip point—enhances V/F linearity at high frequencies by compensating A_3's relatively long response time when used as a comparator. The 10-pF capacitor provides positive ac feedback to A_3's input (trace C). The 2N2369 transistor inverts A_3's output and helps shorten A_3's response time by employing a high-value feed-forward capacitor in its base-drive line. This 800-pF capacitor allows the transistor to complete switching (trace E) just barely after A_3's output begins to change levels.

The 2N2369's negative output turns off the 2N4393. As a result, A_1's positive input rises above ground and causes A_1 to act as a unity-gain follower. A_1's output then slews immediately to the value of E_{IN}, and A_2's integration output reverses direction, forming a triangle wave. When A_2's output falls far enough, A_3 switches again, and the entire cycle repeats.

Note that A_2's triangle output also feeds to four sine-shaper transistors. The LM394's logarithmic relationship between collector current and V_{BE} serves to smooth the triangle wave. And in addition to furnishing gain and buffering, A_4 provides the circuit's sine-wave output (trace F).

To calibrate the oscillator, initially apply 10V to the input and adjust the Wave Shape and Symmetry trimming pots for minimum distortion, as indicated on a distortion analyzer. Next, adjust the input voltage for a 10-Hz output frequency and adjust the Low Frequency Distortion pot for a minimum indication on the distortion analyzer (trace G). Finally, alternately adjust the Zero and Full Scale trimmers until 500-μV and 10V inputs yield 1-Hz and 20-kHz outputs, respectively.

This sine-wave-oscillator circuit provides an unusually clean and wide-ranging response to rapidly changing inputs—a feature most sine-wave oscillators don't offer. **Fig 7** shows the circuit's response for a 10V-ramp input. Observe that the output appears very clean, with no unwanted dynamics even during or following the ramp's high-speed reset.

Set up a sine-wave voltage reference

Common applications for sine-wave outputs include use as ac-calibration or amplitude-stabilized sources. Another sine-wave circuit (**Fig 8**) suits these applications by producing a fixed 1-kHz output with a precise 2.50V rms amplitude. Because this simple, economical circuit employs only two amplifiers, an LF353 dual FET-op-amp IC serves here.

The circuit's 2N2222A transistor oscillates in a 1-kHz phase-shift configuration. At the transistor's collector, the generated sine wave ac-couples to A_1, which provides a closed-loop gain of about five. D_1 half-wave-rectifies A_1's output to produce a dc potential across the 1-μF capacitor. A_2 compares this positive voltage with

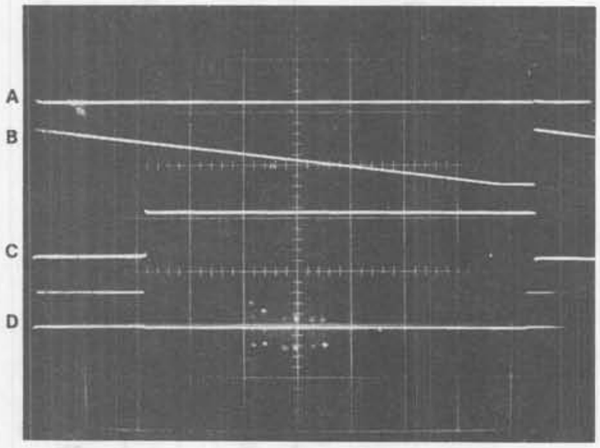

TRACE	VERTICAL	HORIZONTAL
A	5V/DIV	
B	10V/DIV	1 mSEC/DIV
C	10V/DIV	
D	5V/DIV	

Fig 10—Depicting the operation of Fig 9's A/D circuit *in Free Run With Delay mode, trace A shows A_1's output low. In this state, integrator A_2 starts to ramp in a negative-going direction (trace B). When A_2's ramp potential barely exceeds the input voltage's negative value, A_4's output goes high (C). This transition turns on the 2N3904 transistor, which shuts off the TTL output pulse train (D).*

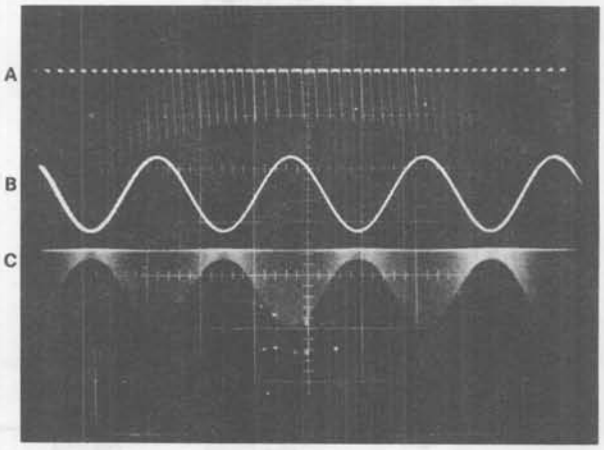

TRACE	VERTICAL	HORIZONTAL
A	1V/DIV	2 mSEC/DIV
B	5V/DIV	20 mSEC/DIV
C	5V/DIV	20 mSEC/DIV

Fig 11—Illustrating the A/D converter's operation *in the Free Run mode, trace B shows a positively biased sine-wave input. Because reset and self trigger occur instantly after conversion, A_2's output produces a ramp-constructed envelope of the input (trace C). Trace A shows a time-expanded form of the envelope waveform.*

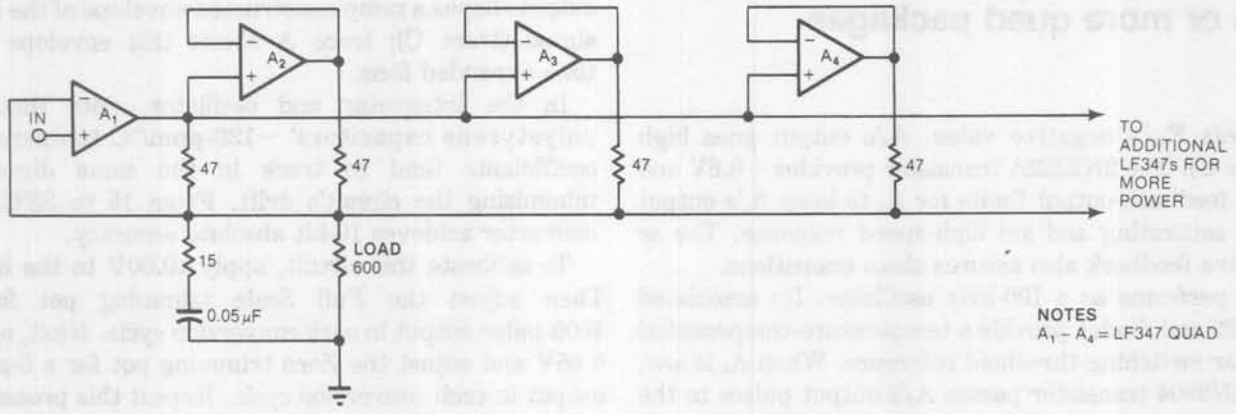

Fig 12—Utilizing current-amplifying capabilities, *one LF347 can drive a 600Ω load to ±11V. For additional power, two LF347s can supply an output current of ±40 mA.*

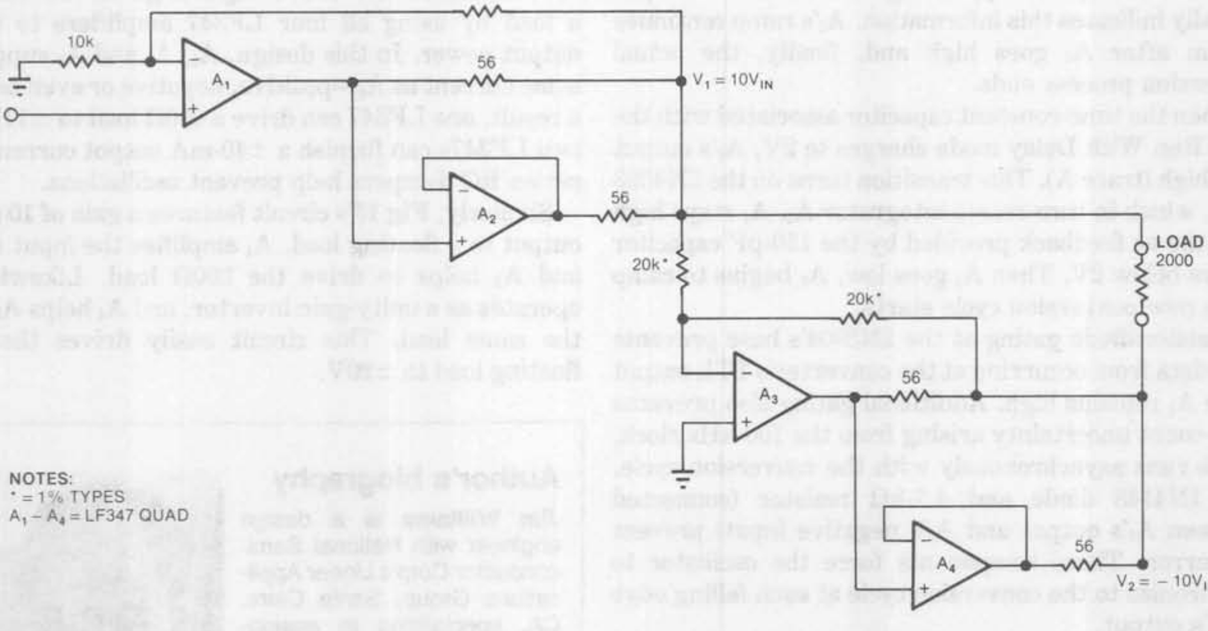

Fig 13—Configured as a high-output-current amplifier *with a gain of 10, this LF347 circuit can drive a 2000 Ω floating load to ±20V.*

a voltage derived from the LM329 reference. Diode D_2, located in the Reference pot's wiper arm, compensates for D_1. In A_2's feedback loop, D_3 prevents negative voltages from conducting to the transistor and the electrolytic 2-μF feedback capacitor upon start-up.

At a gain of 10, A_2 amplifies the difference between the reference and output signals. Additionally, A_2's output provides collector bias for the 2N2222A, completing an amplitude-stabilizing feedback loop around the oscillator. The electrolytic capacitor furnishes stable loop compensation.

To set the circuit's output amplitude, adjust the 5-kΩ pot until a precision voltmeter reads 2.50V rms at the sine-wave output terminal. For a ±5V variation in either power supply, the sine-wave output shifts less than 1 mV. Other key specs include 250-μV/°C typ drift and less than 1% distortion.

Versatile A/D converter employs quad op-amp IC

In addition to temperature- and oscillator-type circuits, the LF347 quad IC further demonstrates its versatility by implementing an integrating A/D converter (**Fig 9**). Either internally or externally triggered, this circuit delivers a 10-bit serial output word in 10 msec (full-scale conversion time).

To understand this circuit's operation, assume that the Mode Select switch is set to the Free Run With Delay position and the 2N4393 FET has just turned off. The A_2 integrator—biased from the LM329 reference—then begins to ramp in a negative-going direction (**Fig 10**, trace B). A_4 compares this ramp with the positive E_{IN} input voltage. When A_2's ramp potential barely exceeds E_{IN}'s negative value, A_4's output goes high (trace C). The 2N2222A transistor provides −0.6V and +7V feedback-output limits for A_4 to keep A_4's output from saturating and aid high-speed response. The ac positive feedback also assures clean transitions.

A_3 performs as a 100-kHz oscillator. Its associated LM329 and diodes provide a temperature-compensated bipolar switching-threshold reference. When A_4 is low, the 2N3904 transistor passes A_3's output pulses to the TTL output terminal. When A_4 goes high, the 2N3904 is biased ON, and the transistor shuts off the output pulses (trace D).

Because A_2 generates a linear output ramp, the time A_4 spends low is directly proportional to E_{IN}'s value. The number of pulses appearing at the 2N3904's output digitally indicates this information. A_2's ramp continues to run after A_4 goes high and, finally, the actual conversion process ends.

When the time-constant capacitor associated with the Free Run With Delay mode charges to 2V, A_1's output goes high (trace A). This transition turns on the 2N4393 FET, which in turn resets integrator A_2. A_1 stays high until the ac feedback provided by the 150-pF capacitor decays below 2V. Then A_1 goes low, A_2 begins to ramp and a new conversion cycle starts.

Resistor/diode gating at the 2N3904's base prevents false data from occurring at the converter's TTL output while A_1 remains high. Additional gating also prevents a ±1-count uncertainty arising from the 100-kHz clock, which runs asynchronously with the conversion cycle. The 1N4148 diode and 4.7-kΩ resistor (connected between A_1's output and A_3's negative input) prevent this error. These components force the oscillator to synchronize to the conversion cycle at each falling edge of A_1's output.

You can adjust the time between conversions in Free Run With Delay mode by changing the RC components connected to this selection-switch position. Moreover, you can trigger the converter externally using a 2V source.

In Free Run mode, the converter self-triggers immediately after A_4 goes high. The conversion time thus varies with the input voltage. Here, a positively biased sine wave (**Fig 11**, trace B) feeds to the converter's input. Because the converter resets and self triggers immediately after converting, A_2's ramp output shapes a ramp-constructed envelope of the input signal (trace C); trace A shows this envelope in a time-expanded form.

In the integrator and oscillator, note that the polystyrene capacitors' −120-ppm/°C temperature coefficients tend to track in the same direction, minimizing the circuit's drift. From 15 to 35°C, the converter achieves 10-bit absolute accuracy.

To calibrate this circuit, apply 10.00V to the input. Then adjust the Full Scale trimming pot for a 1000-pulse output in each conversion cycle. Next, apply 0.05V and adjust the Zero trimming pot for a 5-pulse output in each conversion cycle. Repeat this procedure until the adjustments converge.

Amplifiers supply high output current

Yet another role the LF347 quad can play is as an element in high-output-current amplifiers. **Fig 12** shows a scheme for delivering a large current flow into a load by using all four LF347 amplifiers to supply output power. In this design, A_2, A_3 and A_4 supply the same current as A_1—positive, negative or even zero. As a result, one LF347 can drive a 600Ω load to ±11V, and two LF347s can furnish a ±40-mA output current. The series RC dampers help prevent oscillations.

Similarly, **Fig 13**'s circuit features a gain of 10 and an output to a floating load. A_1 amplifies the input signal, and A_2 helps to drive the 200Ω load. Likewise, A_3 operates as a unity-gain inverter, and A_4 helps A_3 drive the same load. This circuit easily drives the 200Ω floating load to ±20V. **EDN**

Author's biography

Jim Williams is a design engineer with National Semiconductor Corp's Linear Applications Group, Santa Clara, CA, specializing in analog-circuit and instrumentation development. Previously, he worked as an analog systems and circuit consultant at Arthur D Little Inc and directed the Instrumentation Development Lab at the Massachusetts Institute of Technology. Jim studied psychology at Wayne State University. In his spare time, he enjoys tennis, skiing, art and collecting antique scientific instruments.