84
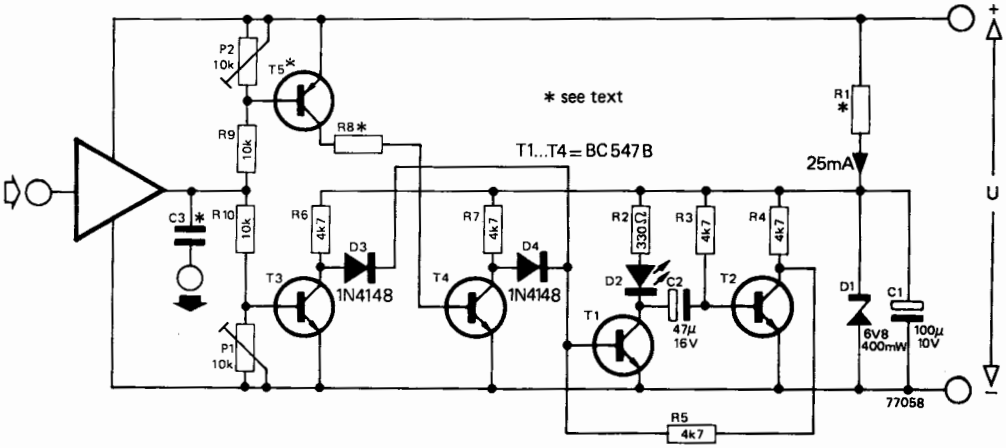
clipping indicator