SIMPLE-SYN, THE MUSIC MACHINE

This simple project, using an integrated circuit does more, better than many professional devices a generation ago.

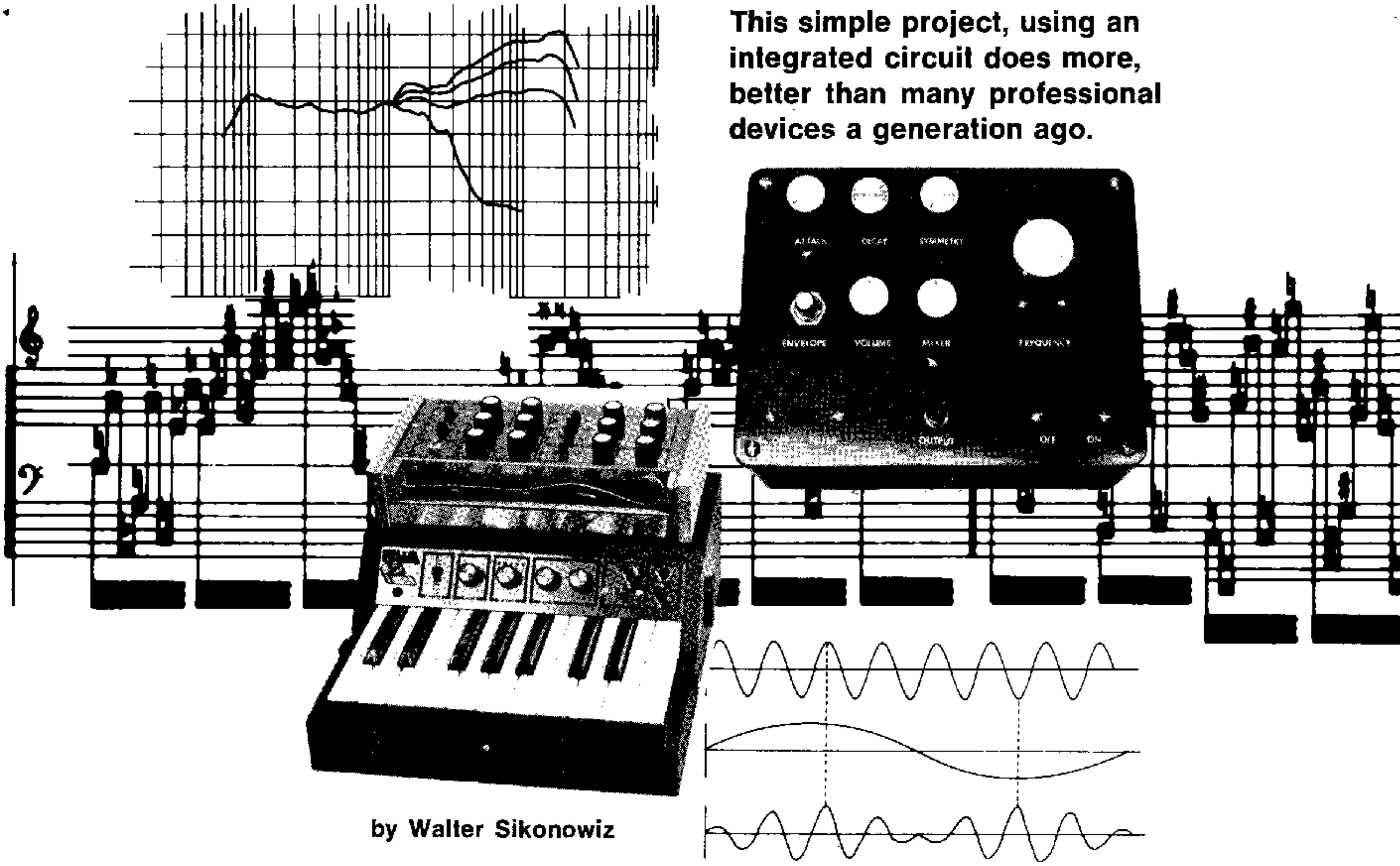

by Walter Sikonowiz

IT WAS INEVITABLE that modern man would use electronics to imitate the sounds of earlier musical instruments. Just as the pipe organ has been used for centuries to produce sounds similar to trumpets, flutes, and strings, for the past thirty years electric pianos and organs have been used to mimic the pianoforte and the pipe organ. Only today, with the advent of microelectronics—integrated circuits and other improvements on the vacuum tube and discrete transistors—we are seeing an explosion in the design and manufacture of electronic musical instruments.

In the Beginning. We've had electronic instruments as far back as the 1930's, though they were far simpler than even today's toys. In France the Martinot and the Oniolone used piano-like keyboards to control electronic oscillators which produced sustained tones. They were the forerunners of the keyboards which most rock-pop groups use today to produce those massive 120-dB sound crushers at festivals and concerts—to say nothing of thundering dance halls and discotheques.

Early Instruments. The best-known electronic instrument before today's was the Theremin. It consisted of two radio-frequency oscillators. One had a fixed frequency, and the frequency of the other was controlled by the player moving one hand nearer to, or farther from a sensing plate. The difference between the frequencies of the fixed and the variable oscillator produced a tone capable of being shifted throughout the audio range. The volume was controlled by slight movements of the player's other hand. Because nothing was actually touched to produce the frequency and volume changes, the Theremin made a weird, gliding tone which could, in the hands of a skilled performer, be extremely effective. However, it could produce only one tone at a time, and the world of music had to await the development of much more sophisticated circuitry before true electronic musical instruments were developed.

Electronic Music Today. The modern electronic synthesizer came into being with the construction of a vacuum-tube monster with thousands of tubes and other components. Called the Mark I RCA Synthesizer, and built at Princeton, New Jersey, it was dismantled after several years of experimentation to supply parts for the Mark II. This machine is still in use, and though smaller than the Mark I, it measures about 17 feet square and 7 feet high. It is still in use in the Columbia-Princeton Music Center, in New York City.

In the early 1960s Robert Moog (pronounced like "vogue") began developing and producing a line of electronic music synthesizers which revolutionized music. Within the next few years several other firms began producing synthesizer equipment, and in the last several years the microminiaturization made possible by the development of integrated circuits has made possible synthesizers controlled by keyboards—so now real performance instruments exist.

The Nature of Music. Before describing the construction of our simple syn-

SIMPLE-SYN

thesizer, Simple-Syn, we should first examine the composition of its end product—the music itself. Musical instruments all produce sounds, which can be defined in terms of their *frequency* (also called pitch), *dynamics* (often described, inaccurately, as loudness), and *timbre*.

Timbre. This is the quality of sound that differentiates a trumpet from a violin when both are playing the same frequency. The timbre is the result of "secondary" frequencies (harmonics—also called "overtones") being present in the sound of the respective instruments. If there are many harmonics present, the sound is called bright. If there are only a few present, the sound is called dull or mellow.

These harmonics are *above* the basic pitch being played. The timbre of each instrument is different because each instrument has its own particular pattern of harmonics.

Assume both the violin and clarinet are playing the same pitch, A440. Then A440 would be called the fundamental. The first overtone has a pitch of 880 cycles per second (2x440); the second overtone has a frequency of 1320 cycles a second (3x440); the third overtone has 1760 cps (4x440) and so on.

The clarinet and violin have different overtones. The violin produces the fundamental and all the *odd* and *even* numbered overtones. The clarinet on the other hand produces the fundamental and the odd numbered overtones. The overtones are not as loud as the basic frequency and are therefore not recognized as the fundamental. The loudness of the higher numbered overtones decreases rapidly.

In other words, every instrument has its own set of overtones that make up its timbre. The two factors that account for the difference in timbre are: which overtones are present; and the relative strength of those overtones.

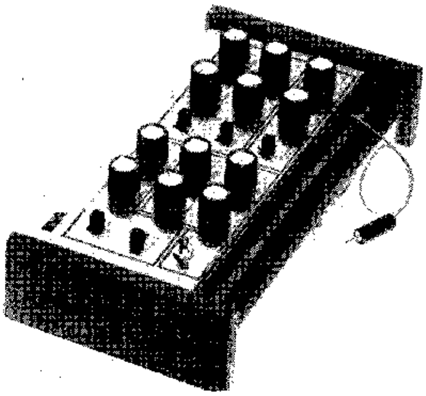

Small electronic musical instruments may be built from kits like this one from PAIA Electronics (address at end of article)

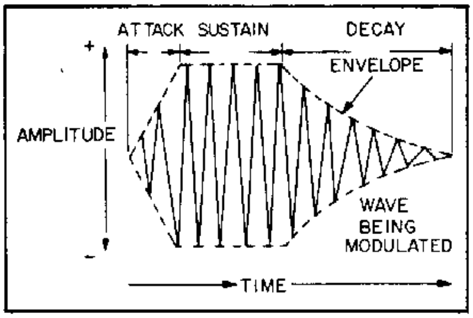

Typical musical note shows approximate areas of attack, sustain, and decay, Any or all of these may be much shorter or longer.

There are four basic combinations of fundamental and overtones that are important in electronic music. These specific combinations are named: sine, triangle, square, and sawtooth. A sine wave is like a flute in quality.

A triangular wave consists of a fundamental and the odd numbered overtones. The overtones that produce the triangle wave are very weak in strength. The quality of the sound produced by a triangle waveform at an audible pitch is like a wooden recorder.

A square wave, like the triangular waveform, consists of the fundamental and the odd numbered overtones. The overtones that make up a square wave are more numerous and louder than the same overtones in the triangle. The square wave has a "hollow" sound to it, like a clarinet.

Lastly, the sawtooth waveform consists of the fundamental frequency and the even and odd numbered overtones. The sawtooth sound quality is very "bright" like a string or brass instrument.

Dynamics (loudness). Dynamics is the third property of sound. It has two important aspects. It includes *overall loudness*, which can vary from the rustle of leaves to the blast of a rocket. It also includes the changing ratios of sound as time passes.

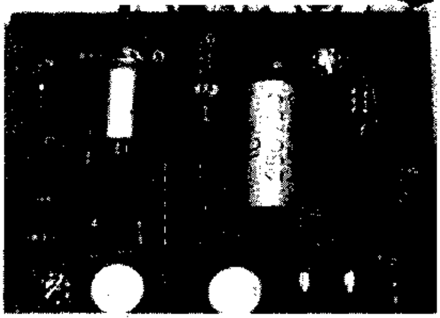

Closeup view of printed circuit board shows placement of the components. Be sure to use an IC socket for the IC.

For most musical sounds the loudness versus time characteristic may be broken into three parts:

1. Attack time—the time period from silence to when the sound reaches its maximum loudness.
2. Sustain time– the period during which the sound is maintained at some loudness level.
3. Decay time—the period during which the sound fades away to silence.

The voice is an example of a sound that has flexible loudness. A sound from a voice can begin very quietly and increase in volume, then hold some volume level for a time, and finally decrease the loudness of sound until it is silent.

A graph of the variations in loudness in a typical sound is shown.

Two sine waves drawn in dotted lines are labeled "A" and "B." As you can see from the drawing, waveform "B" goes through two cycles in the time that it takes waveform "A" to complete a single cycle. Waveform "B" is therefore twice the frequency of "A" and is said to be the *first* harmonic of the *fundamental* frequency "A." If we draw another wave three times the frequency of "A" it will be the *second* harmonic, four times will be the *third* harmonic, and so on.

If at every point in time we sum together the amplitudes of waveform A and B the result is the waveform shown by the solid line. Note that while the new wave is shaped differently than

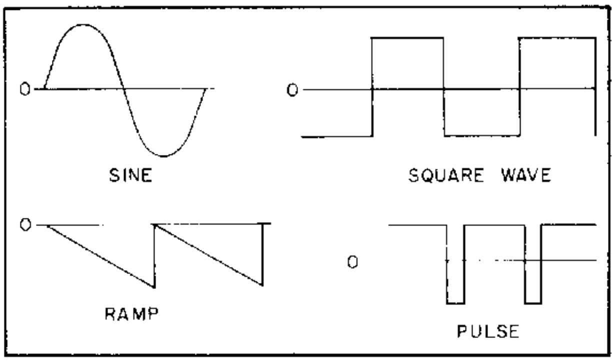

Musical tones may be generated by oscillators making simple sine waves, or any of several other shapes. The most common of these are shown. Note that the frequency of each note is the same, but the timbre (sound quality) will be different, depending on the wave-shape.

either A or B it has the same frequency (and consequently pitch) as the fundamental frequency A. If third, fourth, fifth and higher order harmonics were added into this wave the result would continue to change shape but the frequency would remain the same.

It is not necessary that every harmonic of a fundamental frequency be included in a wave and indeed the most musically interesting sounds have certain harmonics deleted. The square wave is a good example. It is difficult to imagine that the sharp-edged wave illustrated could be built up from smoothly changing sine waves, but it can, as shown in the progression of diagrams (a) through (e). In (b) the fundamental frequency is added to its third harmonic, producing the waveform shown by the solid line. In (d) the fifth harmonic has been added to the result of (b) to produce the new solid waveform and in (e) the seventh harmonic has been added to all the rest. You can see that the trend as higher order harmonics are added is to steepen the sides of the square and flatten and reduce the ripple in the top. When enough harmonics have been added the result will be a square wave. Notice in particular that not all harmonics are added together for a square wave, only the *odd* harmonics (3rd, 5th, 7th, etc.) are included.

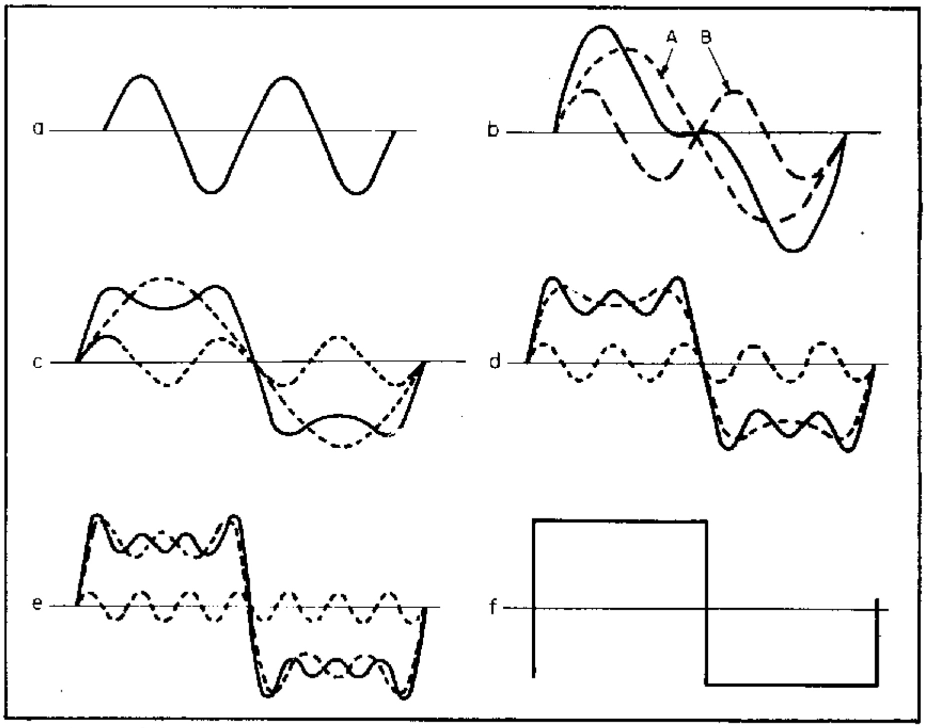

Waveforms show how harmonics of sine wave, added sufficiently, can form square wave. At (b) the fundamental (A) and its first harmonic (B) add to produce shape (b). At (d) and (e) additional harmonics begin to approximate square wave. An infinite number of harmonics would make a perfect square wave, as in (f).

Making Waves. It is much easier to generate a complex ramp or square wave than a sine wave. Since synthesizers operate with harmonic-rich waveforms as their primary signal source there is no need to start out with a sine wave at all. The VCO's supplied with most synthesizers provide a variety of waveforms each of which provides different harmonic structures. Common practice is to use a relaxation oscillator to generate a voltage ramp which is then converted to triangle and pulse waves using simple shaping circuits. In some cases the triangle will also be shaped into a sine wave. These waveforms and their harmonic contents are listed in the Table.

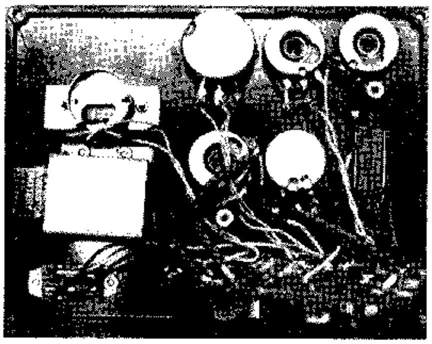

Underside view of front panel shows printed circuit board in place, ready to be dropped into its case.

Building Blocks. Modern synthesizers are made up of one or more each of several different kinds of building blocks, just the way all component hi-fi systems include similar blocks (preamplifier, controls, power amplifier). These building blocks are mostly *oscillators, filters, envelope generators, mixers,* and *amplifiers.* Each circuit is itself fairly simple. When a number of them are connected together they can comprise a performer's synthesizer. To demonstrate the basic principles of the most important of these building blocks we are presenting Simple-Syn—a one-tone synthesizer which incorporates most of the principles needed for practical music synthesizers.

The simple synthesizer in this project shows how basic oscillators (tone generators) work, and how the frequencies they produce are modified to produce a wide variety of sounds.

Simple-Syn is capable of simulating many naturally-occurring sounds, as well as some unnatural ones. It will be useful as a demonstrator of the characteristics of sound, as well as a sound-effects machine for tape recordists. The output of Simple-Syn is sufficient to drive the *Aux* input of an amplifier or the *Line* input of a tape recorder. It may also be adapted to other uses, as will be discussed later.

Shown here is a diagram of a burst of sound. The time interval during which the sound's volume builds from zero to some reference level is called the *Attack* time, while the interval during which the sound remains at the reference level is called the *Sustain* time. Finally, the period during which the sound level decays exponentially back to zero is the *Decay* time.

As you can see, what we have here is an amplitude-modulated sine wave. Now suppose that this sine wave is replaced by some other periodic waveform of the same frequency but with a different waveshape. For instance, consider the ramp, square, and pulse waveforms shown. If you think that they will sound different from the sine wave, you're right. Although these waveforms all have the same frequency as the sine wave, they are aurally perceived as having different timbre.

An important characteristic of natural sound generators is that they filter the waveshapes of the sounds they generate. For example, the body of a violin and the horn of a trumpet are natural resonators which reinforce some frequencies, and attenuate others. The overall shape of a waveform is correlated with the relative amplitudes of its harmonics. So, if a harmonic-rich waveform is filtered, we will alter its shape, since some of its harmonics will be attenuated more than others. Thus, *filtering* produces changes in *timbre.*

How the Circuit Works. Now let's turn

SIMPLE-SYN

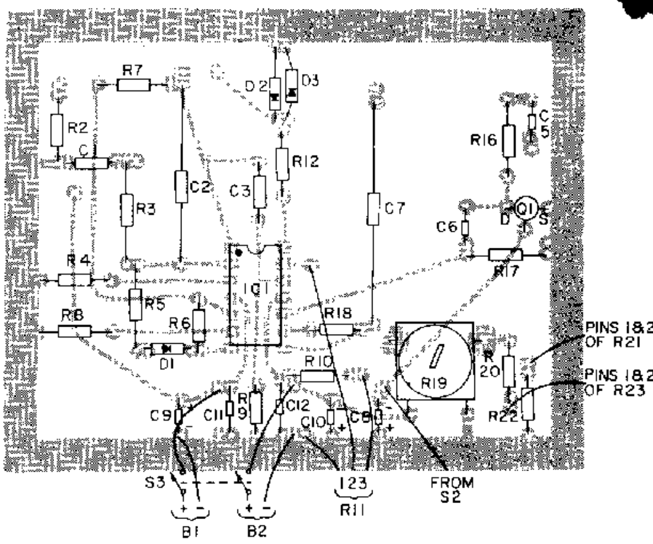

Placement of the components on printed circuit board. Perf board construction may be used since placement is non-critical. Controls, however, should be positioned approximately as indicated, for manual convenience.

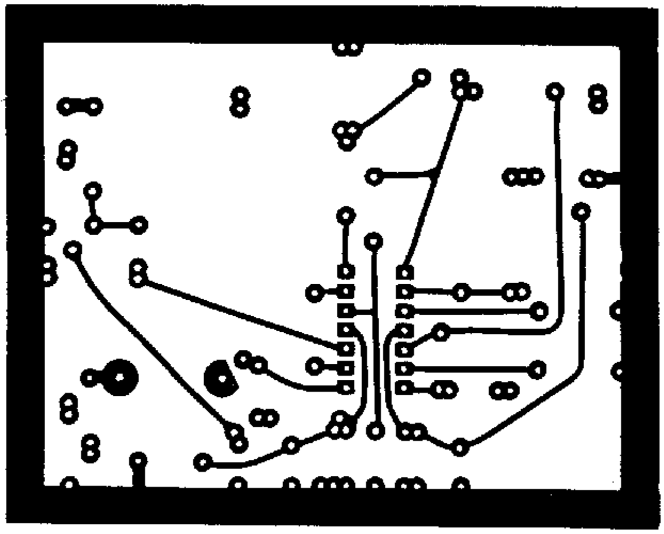

Printed circuit board layout for Simple-Syn is easy to make even if you haven't made one before. Radio Shack has inexpensive kits for boards.

to the schematic of the synthesizer. Sections A and B of IC1 comprise a voltage-controlled ramp generator, whose control voltage is supplied by potentiometer R1. C1 bypasses contact noise generated by rotation of R1. Section A is an integrator, which when fed a constant positive input voltage, produces an output voltage that decreases linearly with time. Section B is a Schmitt trigger which senses the output of A. When A's output drops below some lower reference level, Section B's output drops low, causing current to flow through D1 and R5. This current flow is opposite to (and greater than) the current from R1 that passes through R3. Therefore, A's output is forced rapidly upward. When A's output rises above some upper reference level, B's output swings high, D1 ceases to conduct, and A's output can once again begin to linearly drop. Thus, the whole process repeats itself.

The ramp waveform is fed through C3 to section C, which acts as a comparator. By adusting the *Symmetry* control, R11, we can shift the reference level at which the comparator switches, and thus the ratio of "high" time to "low" time of the rectangular wave at C's output. This rectangular wave is clipped by D2 and D3. The ramp and rectangular waves are mixed in R13 and fed to volume control R15. Closing S1 connects C4 across R15, thus forming a low-pass filter. C5 couples the signal from R15 to the voltage divider formed by R16 and Q1, an N-channel JFET whose resistance decreases as its gate bias decreases.

Gate voltage for Q1 is developed across C8, which we can consider initially discharged with S2 in the position shown. Therefore, Q1's resistance is minimal and the audio signal at its drain is also minimal. Flipping S2 upwards causes C8 to gradually charge through R19, R20, and R21; consequently, Q1's resistance increases and so does the volume. Flipping S2 down again causes C8 to slowly discharge through R22 and R23, and the volume drops once again. Finally, the audio signal from Q1's drain is coupled by C6 to the buffer amplifier formed by section D of IC1.

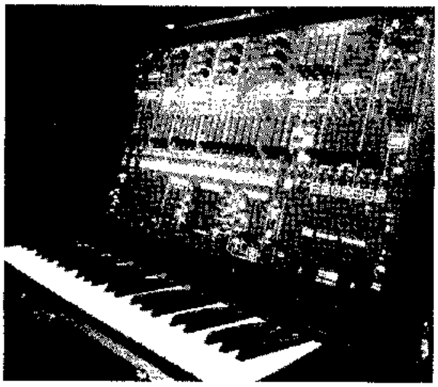

Large synthesizer, the ARP 2600, has four-octave keyboard, three voltage-controlled oscillators which can produce tones from three Hertz up to 20 kHz. In addition to voltage-controlled oscillators, filters, etc., it includes a ring-modulator, two envelope generators and an envelope follower, a random noise generator, three voltage processors, and a reverberation unit.

Building Simple-Syn. Construction of the synthesizer is not critical. The best method would be to copy the printed circuit layout shown. The board is simple enough to be copied using one of the kits available at Radio Shack and elsewhere. My Simple-Syn was built in a plastic box but a metal case is recommended in order to eliminate hum-pickup problems. The control layout shown in the photograph should be used. The completed printed circuit board will mount behind the control pots, with its foil side facing them, using 1¼-inch spacers.

After you have fabricated the board, install the IC socket. The other components may be installed in any order, but solder Q1 last. Be sure to observe proper orientation of Q1, D1, D2, D3, C8, C9, and C10. Trimmer R19 used in my prototype was mounted horizontally. The two large upper pads connect to its wiper. If you use a vertical-mounting trimmer instead you will have to change the position of the pads to accommodate it. Finally, install IC1 in its socket and set the board aside temporarily.

Try to copy the construction of Simple-Syn's prototype cabinet as closely as possible. *Frequency control* R1 mounts in the upper-right-hand quadrant and is actuated by the largest knob. Directly below that pot is an aluminum bracket holding B1 and B2. Right below the bracket is *Power* switch S3.

The first row of controls on the left-hand side of the front cover contains R21, R23, and R11 (from left to right). The second row contains S2, R15, and R13. Below the second row are *Filter* switch S1 and *Output* jack J1. With this arrangement, the interconnecting wiring is shortest, and all components mount on the cover, which is convenient when batteries have to be changed. Incidentally, the battery drain is less than 2 ma., so the batteries will last a long time.

After you've located and drilled all holes in the front panel, including those for the spacers that mount the printed circuit, solder short lengths of #22 stranded wire to the appropriate lugs of the controls, then mount them. Six-inch lengths of wire will suffice. This is easier than mounting the controls and then trying to solder to the leads in close quarters. Note that R14 is not on the

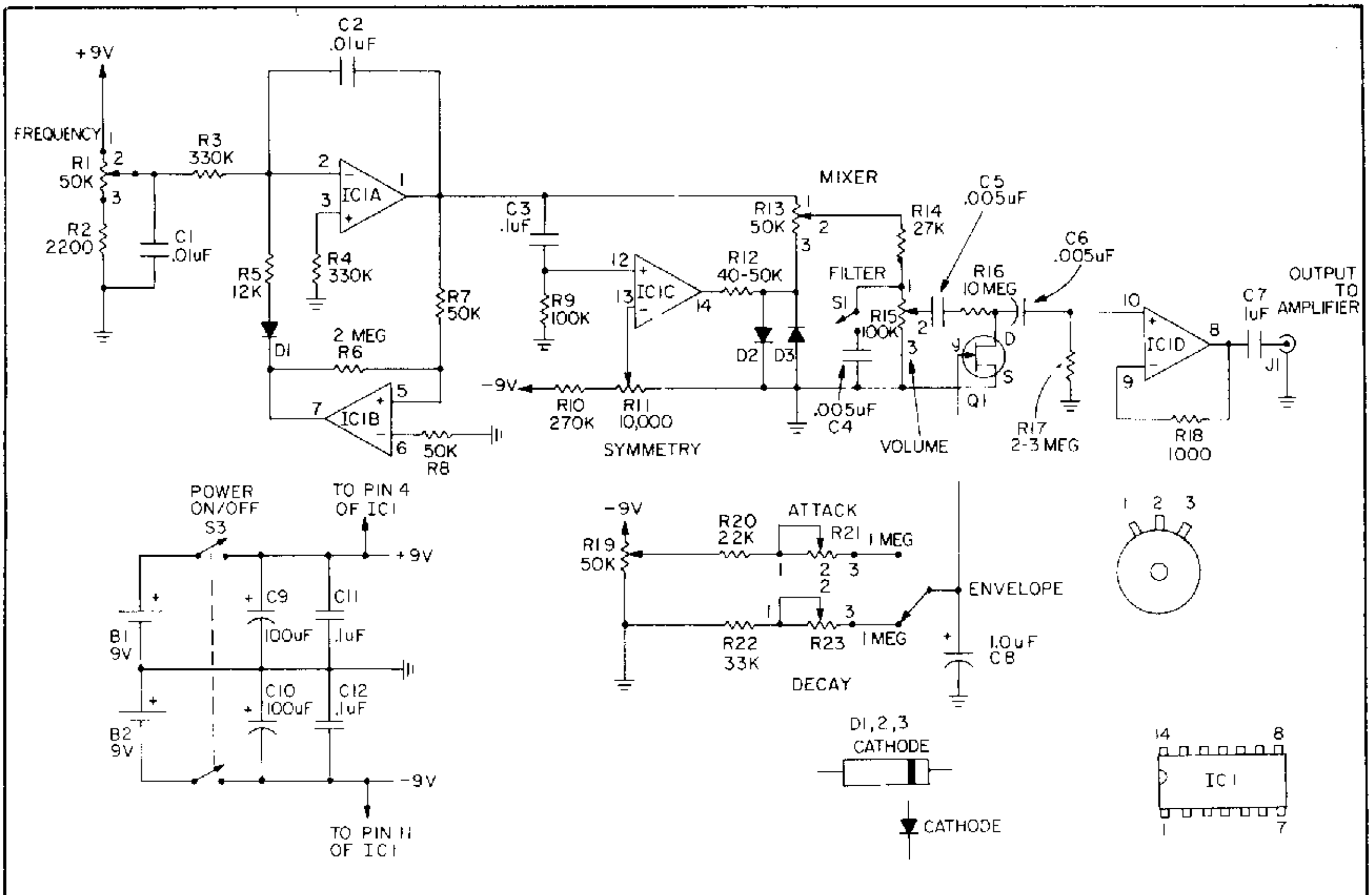

PARTS LIST FOR SIMPLE-SYN TONE SYNTHESIZER

C1—.01-uF capacitor
C2—.01-uF mylar capacitor
C3, 11, 12—.1-uF capacitor
C4, 5, 6—.005-uF capacitor
C7—1.0-uF, 250-VDC capacitor
C8—1.0-uF tantalum capacitor
C9, 10—100-uF, 16 VDC electrolytic capacitor
D1, 2, 3—1N914 silicon diode
IC1—LM324 quad operational amplifier IC
Q1—2N3819 JFET (N-Junction field-effect transistor)
R1—50,000-ohm, audio taper potentiometer (Allied Electronics 854-7333 or equiv. See end of Parts List for Allied's address)
R2—2200-ohm, ½-watt resistor
R3, 4—330,000-ohm, ½-watt resistor
R5—12,000-ohm, ½-watt resistor
R6—1.8 to 2.2-megohm, ½-watt resistor
R7, 8—47,000 to 51,000-ohm, ½-watt resistor
R9—100,000-ohm, ½-watt resistor
R10—270,000-ohm, ½-watt resistor
R11—10,000-ohm, linear taper potentiometer
R12—39,000 to 47,000-ohm, ½-watt resistor
R13—50,000-ohm, linear taper potentiometer
R14—27,000-ohm, ½-watt resistor
R15—100,000-ohm, audio taper potentiometer
R16—10-megohm, ½-watt resistor
R17—2.2 to 3.3-megohm, ½-watt resistor
R18—1000-ohm, ½-watt resistor
R19—50,000-ohm, linear taper potentiometer
R20—22,000-ohm, ½-watt resistor
R21, 23—1-megohm, linear taper potentiometer
R22—33,000-ohm, ½-watt resistor
S1—SPST slide switch
S2—SPDT pushbutton switch
S3—DPDT slide switch
Misc.—knobs, cabinet (preferably metal); 9-VDC transistor radio batteries (2); battery clips; socket for IC1, wire, solder, etc.

Allied Electronics' address is 401 East 6th St., Ft. Worth, TX 76102.

Workbenches are alive with the sound of music—wherever Simple Syn is being built! When the first caveman whistled the first tune, who would have thought that just five million short years later such sweet music would be floating from an electronics filled box? Well, Cro-mag-non Man didn't have the editors of e/e backing him up. Today, you'll find that building a state-of-the-art music machine can be as simple as Do-Re-Mi following our PC board foil and component side layouts. You'll find dozens of uses for the Simple-Syn, especialy if you make tape recordings and are in need of special effects. Besides music, Simple-Syn can be used to imitate foghorns, sirens, whistles and can make eerie, creepy, wailing noises like from the soundtrack of a Grade B science-fiction movie of the Fifties. But, more to the point, Simple-Syn can be calibrated to produce some really outrageous music. Just calibrate the frequency control and the Simple-Syn can span more than three full octaves, a wider range than many popular singers of today command.

SIMPLE-SYN

circuit board—it mounts point-to-point between lug #2 of R14 and lug #1 of R15. Likewise, C4 is off the board, wired between S1 and R15 as the schematic indicates.

Position the front panel face down on a table, and next to it place the printed circuit board, foil side up. Connect the control leads to the pads indicated on the board by inserting each lead into the appropriate hole from the foil side and then soldering. Trim off the excess wire that protrudes from the component side of the board. When the connections have all been completed, mount the board foil side down behind the controls. All the wiring will now be underneath the board, and your project will not be cluttered by dangling wires.

Final Adjustment. When Simple-Syn is completed, only one adjustment must be made. Turn on the power and adjust R21 for minimum attack time, and then R15 for maximum volume. Press S2. Now turn R19 fully to the right, and then fully to the left. Leave it at whichever end provides a loud tone in your speaker (the opposite extreme should produce silence). Now turn R19 back until there is a just barely-noticeable diminishing of sound intensity. The correct position for R19 is anywhere between R19's present position and the position it was in previously. You will notice that the position of R19 affects the attack and decay times somewhat if you play with those controls. Choose a position for R19 (within the two bounds previously indicated) that produces the most pleasing attack and decay behavior.

Using Simple-Syn. If you make tape recordings, Simple-Syn can be used to imitate foghorns, train whistles, sirens, musical instruments, insect buzzes and hums, as well as surreal science-fiction-movie sounds. In conjunction with a small amp and loudspeaker it can provide realistic horn and whistle effects for a model railroad. You might use it to replace your humdrum doorbell with some really wild sounds. Finally, Simple-Syn can be used as a musical instrument. All that is necessary is that you calibrate the frequency control, perhaps using a pointer affixed to the frequency knob and a scale with the positions of the various notes marked on it. Simple-Syn spans more than three octaves, so the larger scale you use, the easier it will be to calibrate. Calibration is easiest with a frequency counter, but you can also tune it by ear, using a piano as reference. In addition, you can replace the 9V. batteries with 8.6V. mercury cells, since the frequency of the ramp generator is voltage-sensitive. Your calibration with mercury cells will stay accurate because, unlike zinc-carbon cells whose voltage decreases with age, a mercury cell's voltage remains quite constant throughout its useful life.

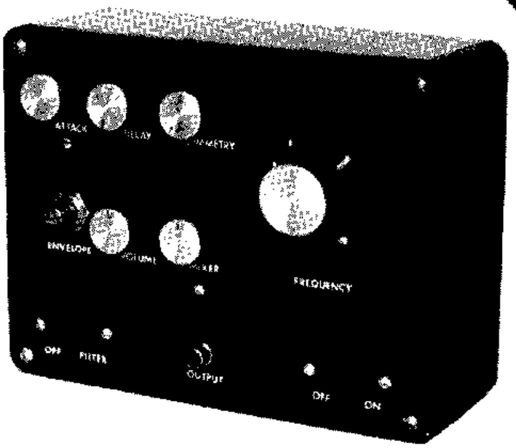

Completed prototype shows layout of controls. If your cabinet is larger you should still stick to this physical layout, to keep internal leads as short as author did.

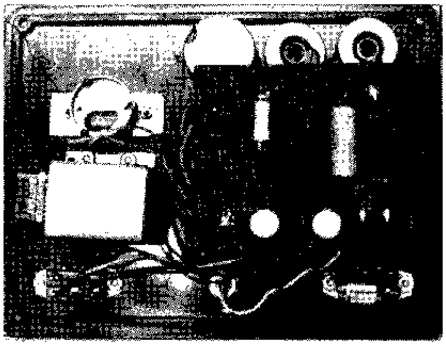

Here's what the author's prototype looks like inside. Everything mounts on the top panel, so the cabinet body is used just for support. If you use a metal cabinet (recommended) it will also serve to minimize possible hum pickup.

Final Remarks. A few final remarks about operation of the synthesizer might be helpful. First, the *Symmetry* control will have its maximum effect when the *Mixer* is rotated to yield a pure rectangular wave; its effect will be inaudible when *Mixer* is rotated to pure ramp. The effect of *Symmetry* and *Mixer* controls, which vary the harmonic structure of the output, will be most evident at low frequencies. This is because the important harmonics (all those up to about the thirtieth) of the higher frequency tones fall above 15 kHz. Beyond 15 kHz the human ear has a rapidly diminishing sensitivity. Thus, a high frequency ramp won't sound tremendously different from a high frequency rectangle because the human ear does not respond to all the important harmonics.

The effect of the *Filter* control will be to attenuate the higher harmonics of a waveform, and produce a more mellow sound. In most natural sounds decay time is longer than attack time. Try using a long attack time together with a very short decay time for a really strange effect. Finally, if you are feeding the synthesizer's output into your hi-fi system, be careful not to sustain a loud tone for too long a time. Home speaker systems can handle large amounts of power only on a transient basis; sustained operation at high power can burn out voice coils.

Learning More About Synthesizers. If you'd like to learn lots more about how today's practical electronic musical instruments work you can get an excellent booklet called the *Synthesizer Primer* by writing to Electronic Music Laboratories, Box H, Vernon, CT 06066. If you're interested in knowing more about their extensive line of Synthesizers, say so, and they'll send you literature and prices, as well as a fascinating 7-inch phonograph disc of five short selections performed on EML synthesizers.

Another good source of information on the subject is PAIA Electronics, Inc., Box 14359, Oklahoma City, OK 73114, the makers of a wide variety of kits for synthesizers and allied instruments. They have several very interesting low-cost modules for producing all sorts of sounds, including wind, surf, chimes, in addition to musical and other sounds. The PAIA "Gnome" micro-synthesizer produces many sounds, such as winds and flutes. Gnome kit costs $48.95. For more information circle number 71 on the Reader Service coupon.

If you're into really heavy performing instruments you can look over the state-of-the-art models being sold by ARP Instruments, 45 Hartwell Ave., Lexington, MA 02173. ARP will send you a record demonstrating the sounds of the ARP Omni, which they call the world's first symphonic electronic keyboard, for $1.00. Moog and Buchla synthesizers are also still being produced, and are available in many music stores. ■