TONE SEQUENCER
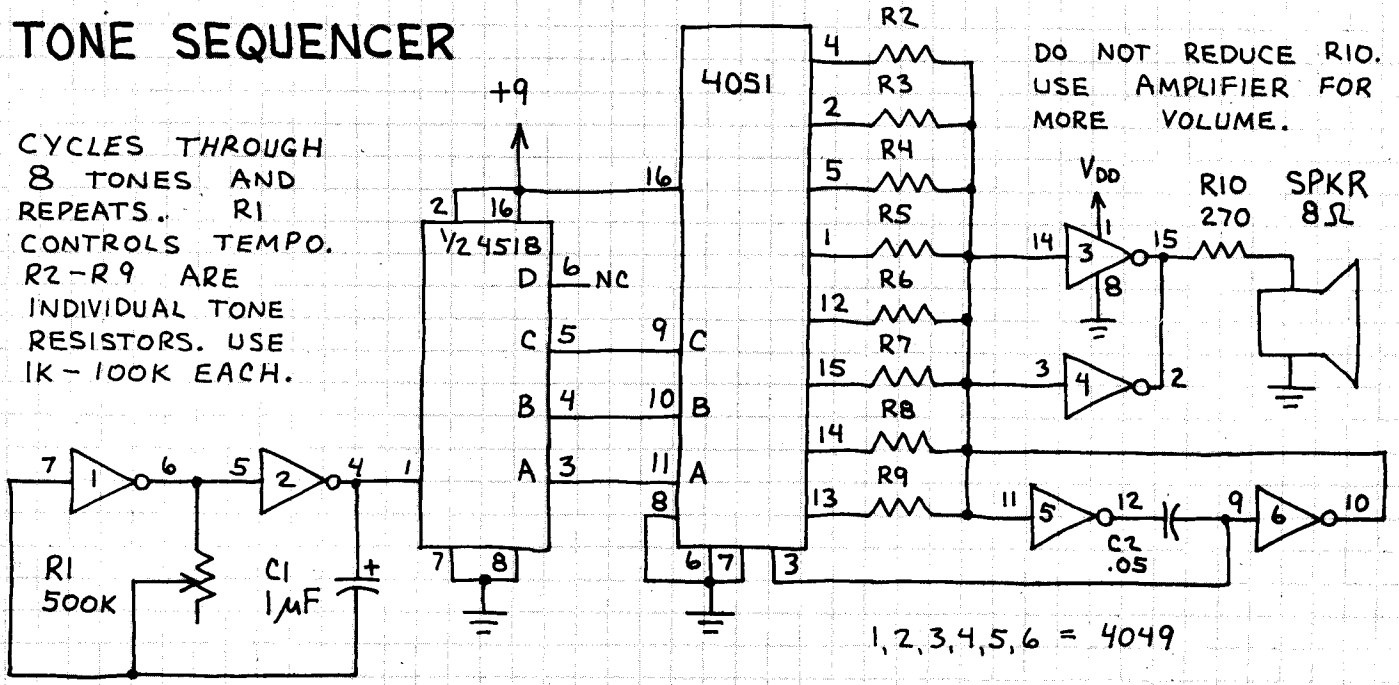
CYCLES THROUGH 8 TONES AND REPEATS. R1 CONTROLS TEMPO. R2-R9 ARE INDIVIDUAL TONE RESISTORS. USE 1K - 100K EACH.