APPLICATION CIRCUITS
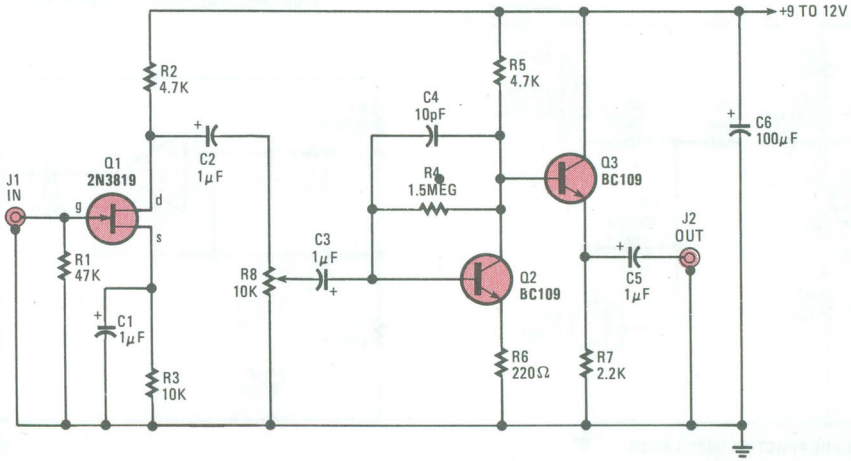
50K MICROPHONE PREAMPLIFIER