JBL Incorporated, 8500 Balboa Boulevard, P.O. Box 2200. Northridge, California 91329 U.S.A.

Technical Manual

JBL SR4725

SPECIFICATIONS

ACOUSTIC & ELECTRICAL SPECIFICATIONS:

- Nominal Impedance: 8 ohm
- Power Rating: 600W
- Frequency Response: 36 Hz to 18 kHz
- Sensitivity: 97 dB SPL*
- Crossover Frequencies: 1.1 kHz

SYSTEM COMPONENTS:

- Cabinet: CSR4725
- Grille: GSR4725 (71971)
- Low Frequency Transducer: 380mm (15 in.) Paper Cone Transducer (2226H)
- DC Resistance: 5.0 ohm ± 10% Aluminum Wire

*1 Watt (2.83 V RMS) @ 1 Meter

SYSTEM COMPONENTS: *(cont'd)*

- High Frequency Transducer: 44mm (1.75 in.) Pure Titanium Compression Driver (2426H)
- DC Resistance: 3.2 ohm ± 8% Aluminum Wire
- Crossover Network: NSR4725 (71935)

AURAL SWEEP TEST SPECIFICATIONS:

A. System Aural Sweep Test: 7.0V Input, 20 Hz to 20 kHz
B. L.F. Aural Sweep Test: 10.0V Input, 20 Hz to 1.2 kHz
C. M.F. Aural Sweep Test: 2.83V Input, 550 Hz to 1.2 kHz

PHYSICAL SPECIFICATIONS:

- Enclosure Dimensions: 724mm x 622mm x 432mm D (28.5 x 24.5 x 17.0 in. D)
- Shipping Weight: 78 lbs. (35.4 kg)

WARRANTY INFORMATION:

- Refer to the Warranty Statement packed with each product.

PACKAGE

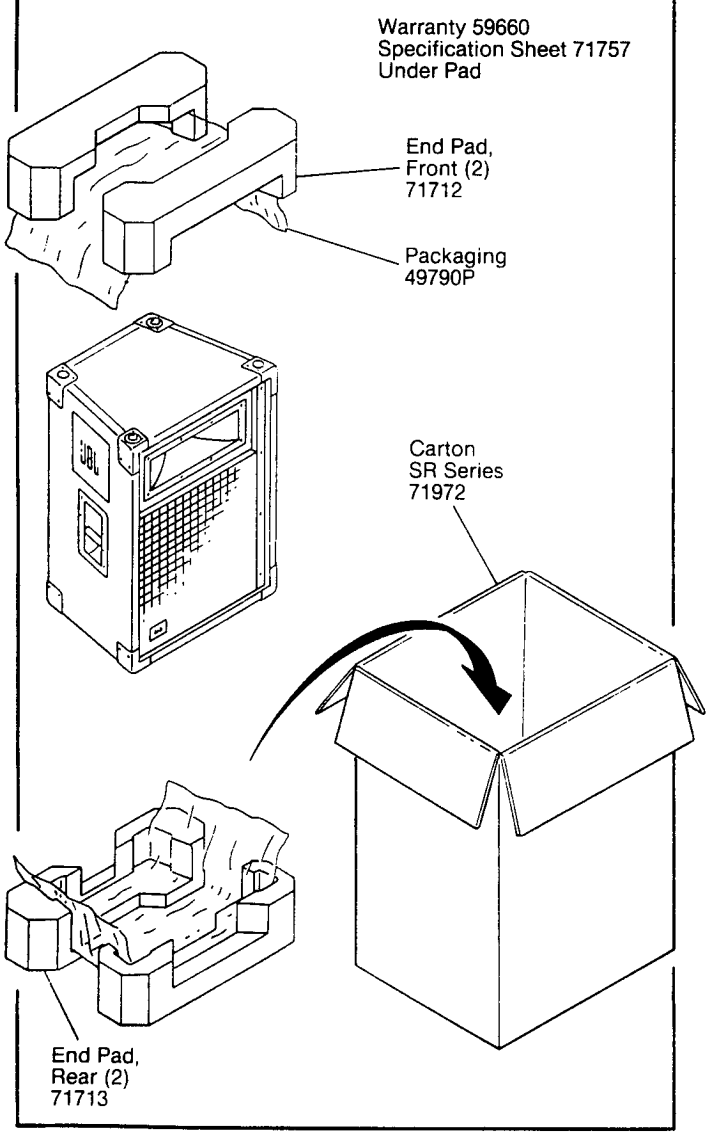

WIRING DIAGRAM

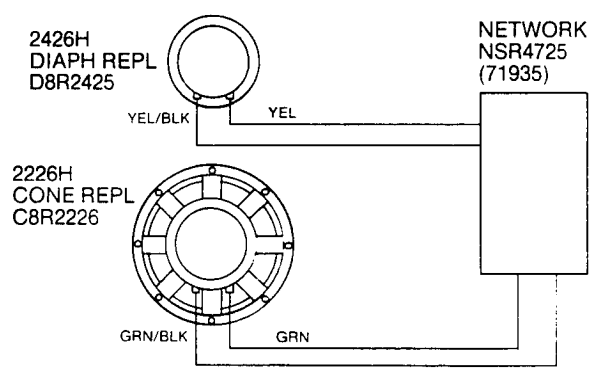

SCHEMATIC NSR4725

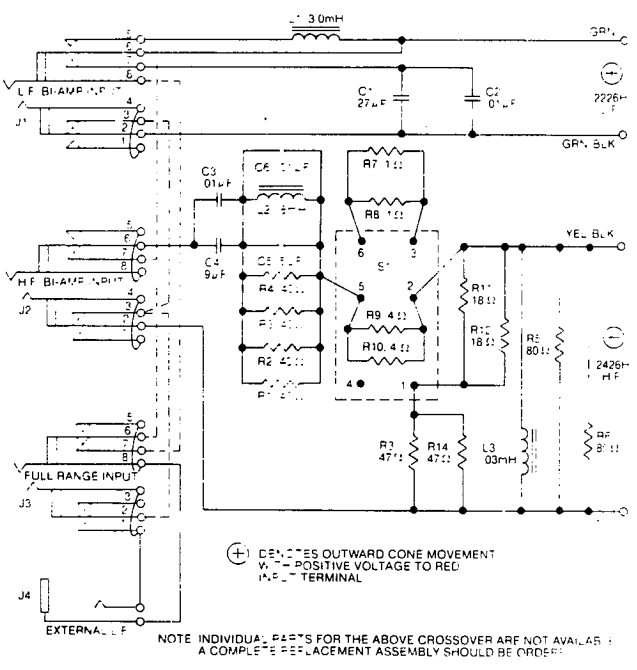
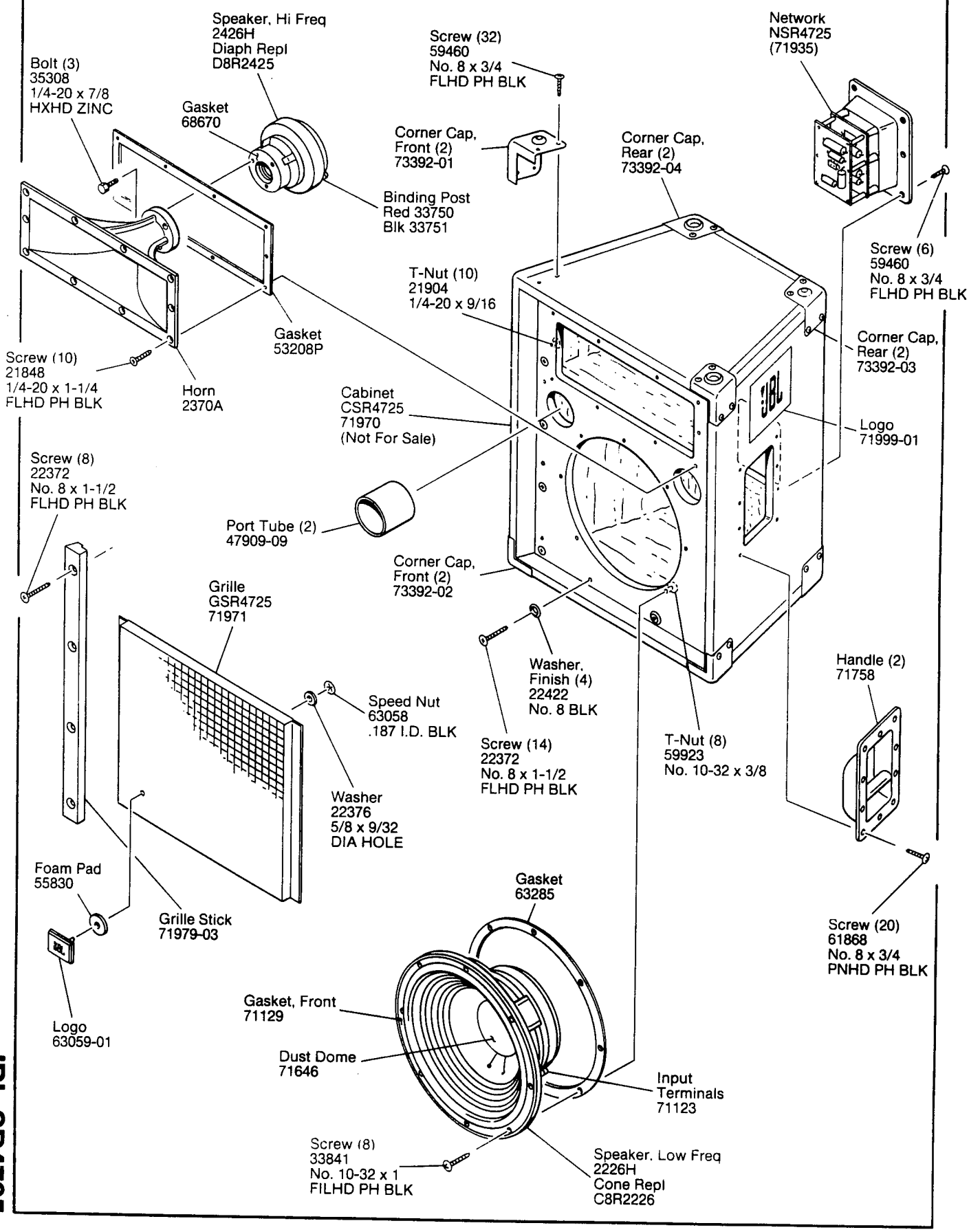
COMPONENT EXPLODED VIEW