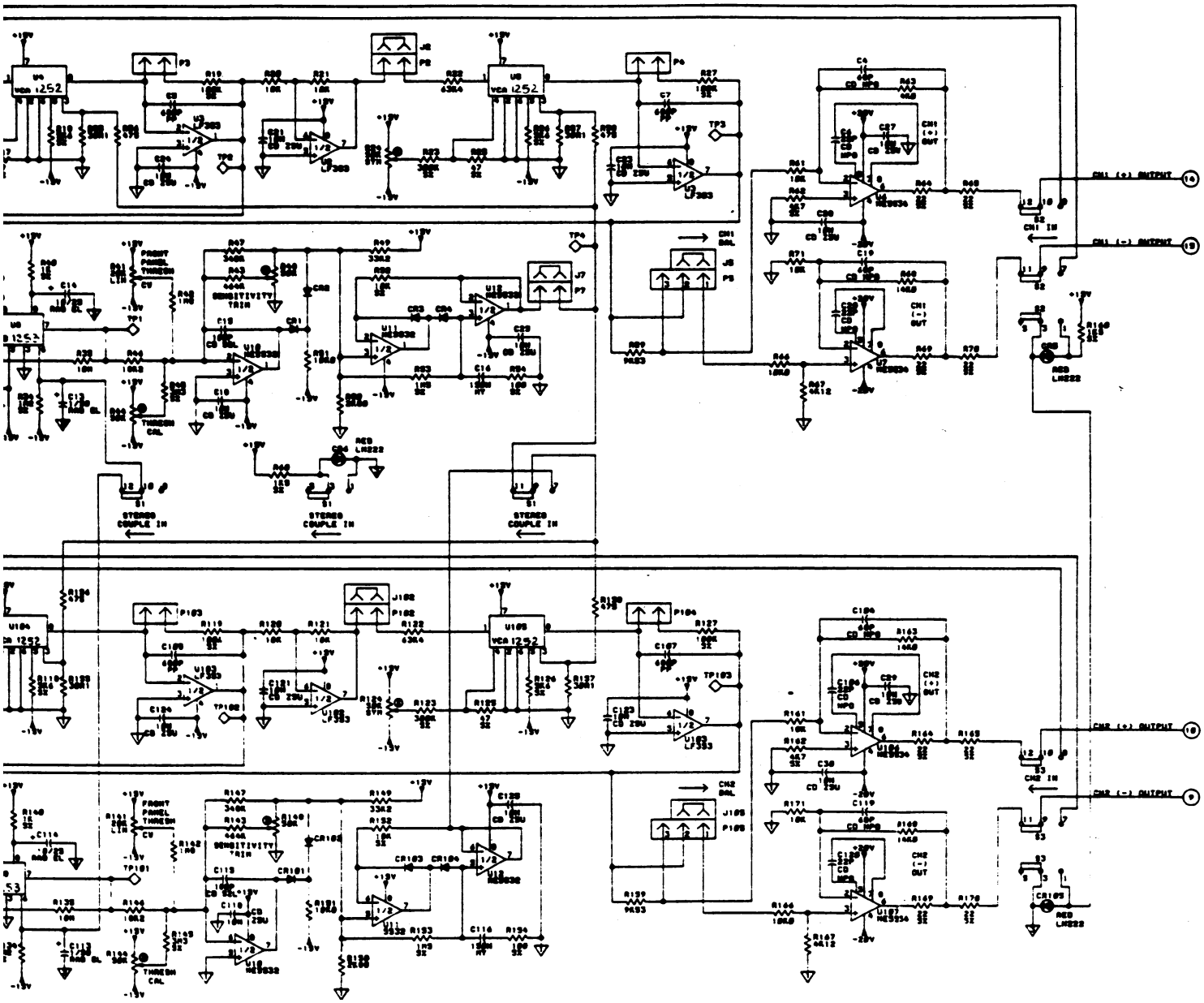
CH1 (+) OUTPUT
CH1 (-) OUTPUT
CH2 (+) OUTPUT
CH2 (-) OUTPUT
STEREO COUPLE IN
STEREO COUPLE IN
STEREO COUPLE IN
CH1 IN
CH2 IN
CH1 BAL
CH2 BAL
FRONT PANEL THRESH
SENSITIVITY TRIM
THRESH CAL
VCA 1252