REVISION RECORD			
LTR	ECO NO:	APPROVED:	DATE:

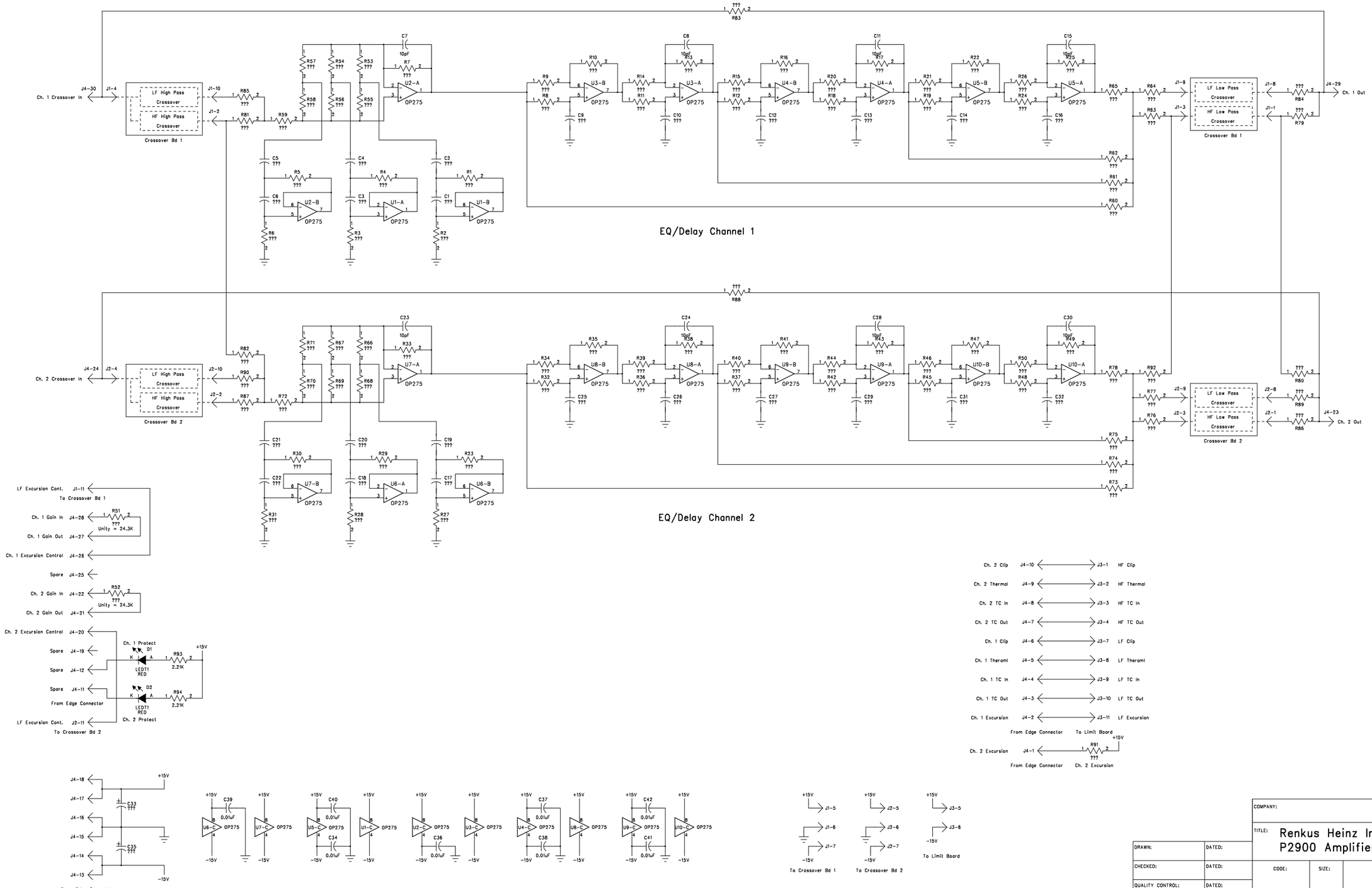

COMPANY:			
TITLE: Renkus Heinz Inc. P2900 Amplifier EQ Board			
DRAWN:	DATED:	CODE:	SIZE:	DRAWING NO:	REV: B
CHECKED:	DATED:				
QUALITY CONTROL:	DATED:				
RELEASED:	DATED:	SCALE:	SHEET: OF		