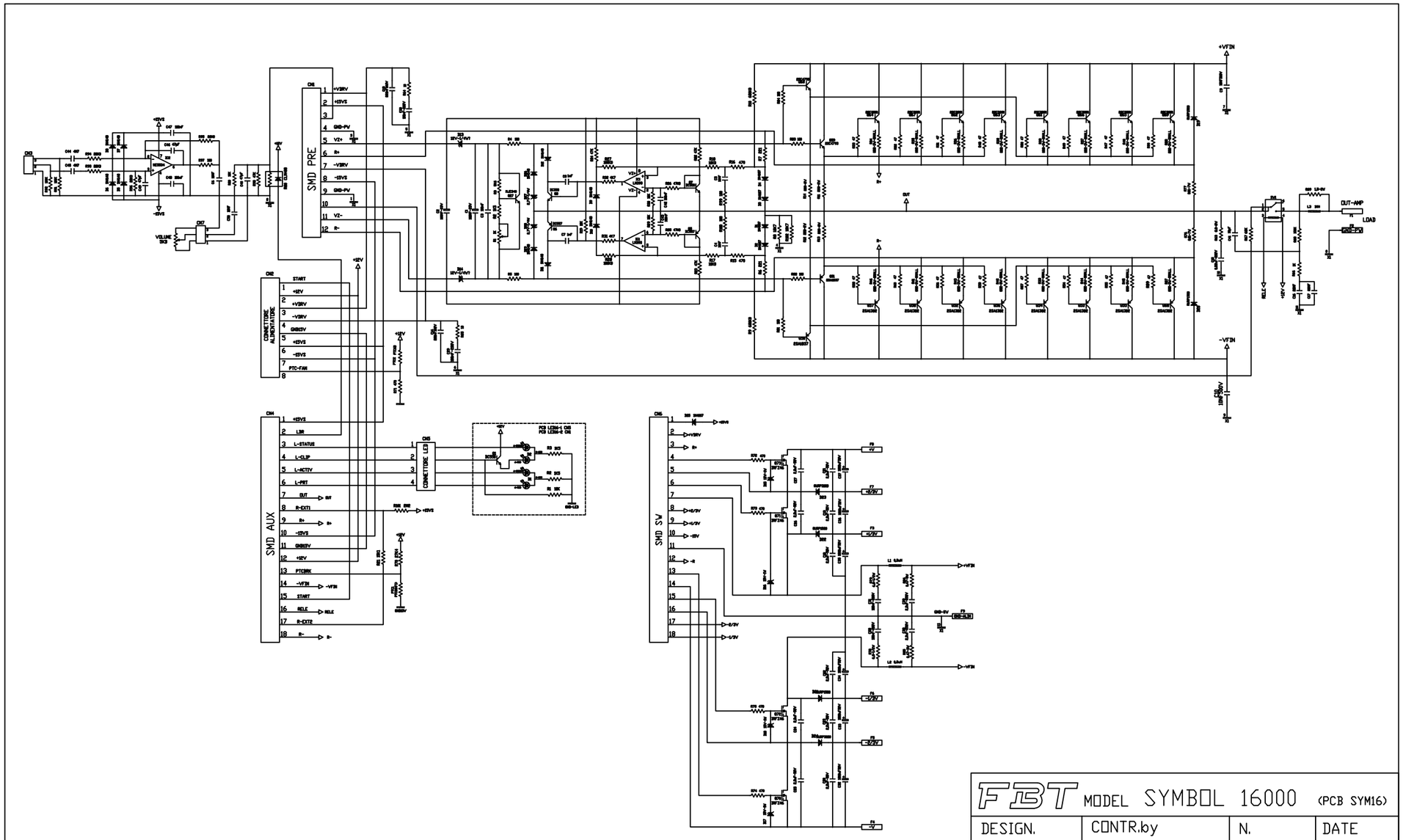

FBT MODEL SYMBOL 16000 (PCB SYM16)			
DESIGN.	CONTR.by	N.	DATE 06/07/98