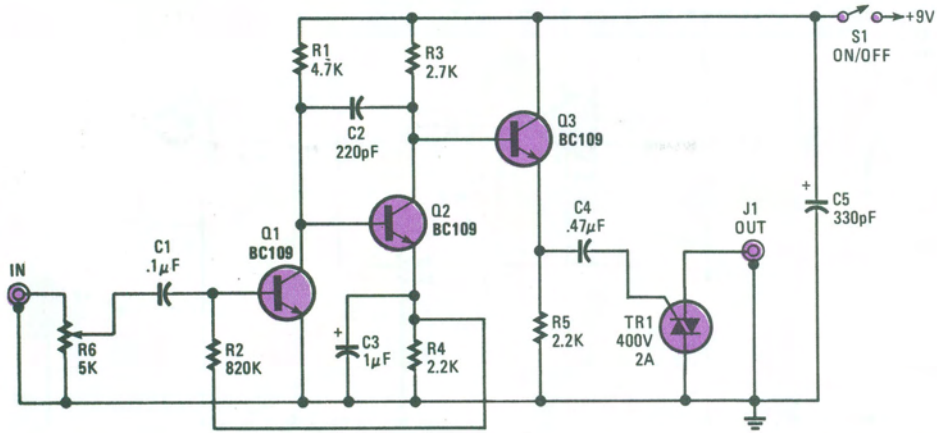SOUND TRIGGERED FLASH