Two-chip radio link pilots toys and models

Transmitter and receiver ICs for multichannel remote control give low-cost digital and proportional system a 100-meter range

by Martin Giles, Kerry Lacanette, Dennis Monticelli, and Ron Page, *National Semiconductor Corp., Santa Clara, Calif.*

☐ Toys and model vehicles with radio-frequency remote control have long been limited to committed hobbyists and radio amateurs working with expensive control terminals. But the price of radio control will drop enough to spur a consumer boom now that inexpensive but sophisticated integrated circuits are moving into the field.

Penetration of this high-volume, low-cost market is helped considerably by ICs designed for easy, reliable assembly and operation. Two of the first such chips, introduced at the end of 1978 and now in volume production, are the LM1871 encoder-transmitter and the LM1872 receiver-decoder. They make it possible to build a complete radio control system for only $10.

The LM1871 encoder-transmitter contains all the circuitry required to modulate an rf carrier as high in frequency as 80 megahertz with up to six analog channels of control information. The LM1872 receiver-decoder uses a combination of pulse-width and pulse-count techniques to recover two analog signals and to accommodate two others for digital (latched) service. Alternatively, simple external circuitry provides for handling a total of four independent channels in any combination of analog or digital formats. The versatile chip pair thus may be adapted to many other tasks such as activating burglar alarms or the remote switching of lights, TV channels, or data links, to name just a few.

With or without a license

While sharing many of the features of the typical 0.75-watt, $200-to-$400 radio control set used by the serious hobbyist in the licensed portion of the spectrum at 72 MHz, the LM1871/LM1872 combination is also designed to provide superior performance over the frequencies where no operator license is required (see Table 1). The modulation technique used is compatible with the requirements of the Federal Communications Commission for all allocated frequencies. The decoding technique, suitable for use in the licensed bands at the

REMOTE-CONTROL FREQUENCY ALLOCATIONS AND GENERAL REQUIREMENTS

Frequency (MHz)	Carrier tolerance	Maximum power or field strength	Band-width	Modulation	Notes
26.995 27.045 27.095 27.145 27.195 27.255	0.01%	10,000 μV/m measured at 3 meters.	± 10 kHz	On/off keying or amplitude tone modulation only	• Low power. Licensed operators permitted transmitting powers to 2.5 W • Frequency, phase and amplitude modulation prohibited • Maximum out-of-band emission: 500 μV/m at 3 m • Channel spacing: 50 kHz
49.830 49.845 49.860 49.875 49.890	0.01%	10,000 μV/m at 3 m	± 10 kHz	Any type	• No license required • Maximum out-of-band emission: 500 μV/m at 3 m • Channel spacing: 15 kHz
72.160 72.320 72.960	0.005%	0.75 W	± 4 kHz	On/off and tone	• License required
72.080 75.640 72.240 72.400	0.005%	0.75 W	± 4 kHz	On/off and tone	• Remote control of model aircraft only • License required

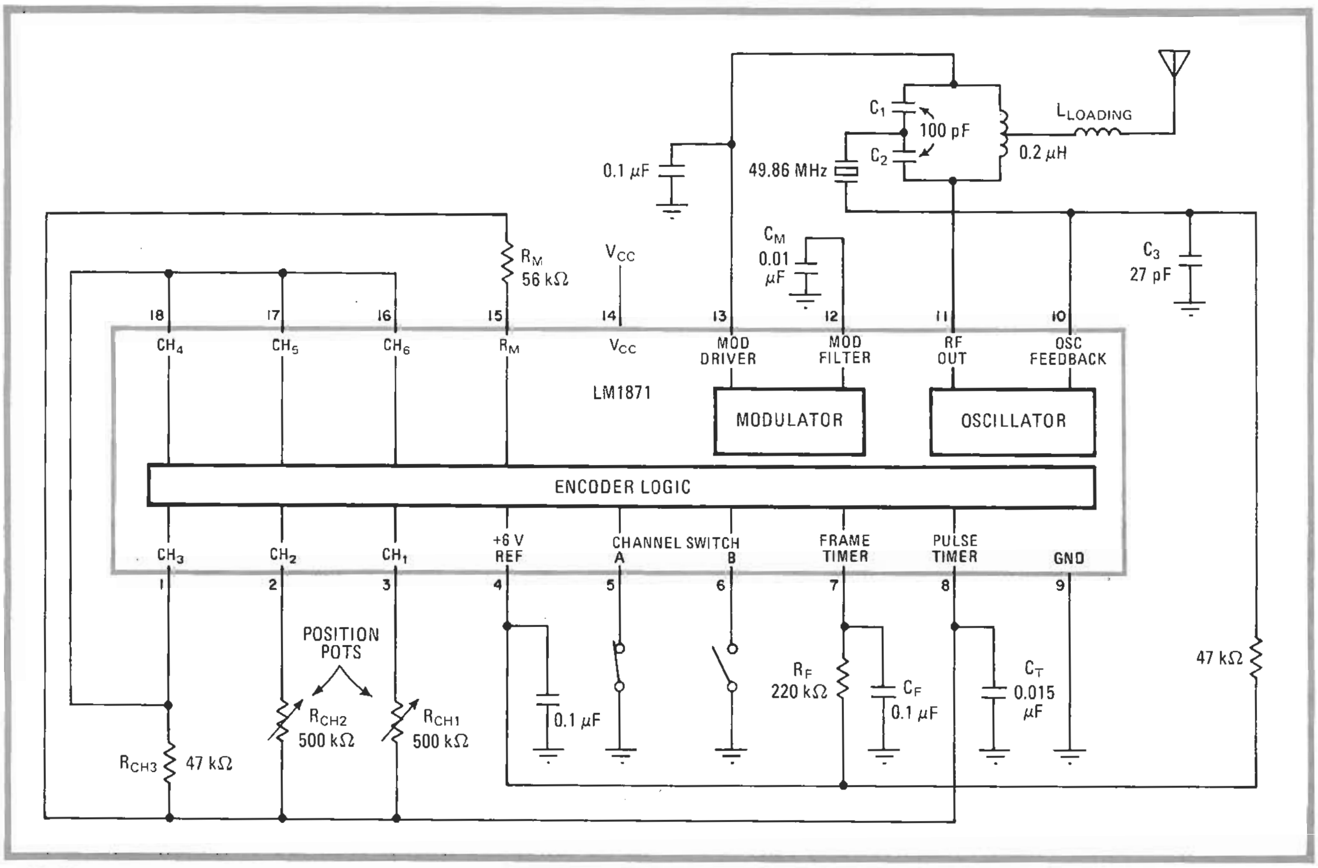

1. Guidance. LM1871 encoder-transmitter guides toys and models at 27, 49, and 72 MHz. Digital and proportional unit, shown configured for two channels each of digital and analog data, can be set up to deliver up to six channels of pulse-width–modulated information.

allowed higher power levels, works equally well in the low-power unlicensed segments at 27 and 49 MHz.

The LM1871 is a six-channel combination digital and proportional type encoder and rf transmitter (Fig. 1). A bipolar linear device, it is designed to generate a field with a strength of 10,000 microvolts per meter at a distance of 3 meters from its antenna at frequencies up to 50 MHz. This is the maximum field strength permitted for unlicensed transmitters. Encoding involves a pulse-width modulation scheme: analog information is converted into a train of pulses whose widths are proportional to the corresponding channel inputs.

In practice, the analog information at each channel input, and thus the output pulse width, can be set by a potentiometer that corresponds to a given control variable. Each of up to six pots may be sequentially switched to discharge the timing capacitor at pin 8, which is periodically charged by the 1871. The setting of switches A and B (pins 5 and 6) determines the number of channels sent in the transmitted pulse train. This number may vary from three to six. Each frame of six pulses lasts about 20 milliseconds, which includes a terminating sync pulse 5 ms long to allow the receiver to discriminate between one set of pulses and the next.

In operation, capacitor C_T at pin 8 is charged to two thirds of the supply voltage (V_{cc}) through the pulse timer in a time determined by both R_M and C_T. This time corresponds to the carrier-off period. The capacitor is then discharged back down to one third of V_{cc} through external potentiometer R_{CH1}, which sets the carrier-on period for the corresponding channel, with the sum of the on and off periods constituting the pulse width for the channel. This width is usually between 1 and 2 ms, with a nominal 1.5-ms value. At the receiver, a corresponding potentiometer connected into a pulse recovery circuit is mechanically set in position by a servo, the servo rotating until the pulse widths at receiver and transmitter match.

Closed loop or open

This pulse-width matching is a form of closed-loop analog control: the rotation of the receiver's servo is proportional to the control position of the transmitter's potentiometer—that is, a steering, or positional function. Alternatively, open-loop control can be obtained for any channel by omitting the corresponding receiver potentiometer and comparing the transmitted pulse with a fixed pulse width at the receiver (usually a 1.5-ms monostable vibrator triggered by the leading edge of the transmit pulse). A shorter transmitted pulse will cause the servo to rotate in one direction. Matching pulses will result in a stationary motor, and a wider transmitted pulse causes rotation in the other direction. The motor speed can either be fixed for positional control or variable, depending on the actual difference in the pulse widths for speed control. Because this open-loop method initially requires matched pulses for a stationary motor, the LM-1871/1872 can also use another method, described later, that avoids the need for a time reference to control latched channel controls (digital channels).

The typical transmitting antenna used in the field will be a telescoping or fixed wire antenna about 0.6 m in length. At 27 and 49 MHz, this length is less than one tenth of a carrier wavelength, so the antenna is capacitive. At 49 MHz, a 0.6-m, 5.6-mm-diameter antenna can be represented by a 6.2-picofarad capacitor. The ability of such an antenna to radiate power can be represented by an equivalent radiation resistance (R_A) that would dissipate the same power. R_A is given by:

$$R_A = 40\ (\pi\ L/\lambda)^2 \text{ ohms}$$

where L is the length of the antenna and λ is the wavelength, both in meters. For an antenna 0.6 m long, R_A equals 3.78 Ω.

The current through R_A needed to generate a given field strength, E (in μV/m), is given by:

$$I_A = Ed\lambda/(120\pi L)$$

where d is the distance in meters from the antenna. Plugging in the FCC limit for E of 10,000 μV/m at d = 3 m, it is seen that the antenna current is 0.8 mA. If the capacitive reactance of the antenna is tuned out with a loading coil (resonating with 6 pF at 49 MHz) less than 3 mV is required from the oscillator tank circuit, in theory. The loss resistance, R_L, is considerable, however, and must be taken into account. This resistance will be a function of the terrain, transmitter height, load mismatch, and other factors. For a typical hand-held transmitter with a consequently poor ground return, R_L will vary from several hundred ohms to kilohms. Practical experience indicates that the tank coil should be suitably tapped to deliver 20 mV peak to peak at 49 MHz and about 200 mV p-p at 27 MHz to the antenna loading coil in order for the 1871 to deliver the maximum field strength. The transmitter is regulated so that the maximum power output is maintained for a supply voltage variation extending from 16 down to 5 volts.

The extremely low radiated power permitted in the unlicensed bands does indicate one difficulty in utilizing these frequencies, apart from the limited range. Specifically, FCC regulations mandate that out-of-band emissions must be at least 26 dB below the peak permitted carrier level: that is, less than 500 μV/m. Because of the substantial losses encountered in the antenna circuit, the oscillator power level must usually be made high to achieve the maximum permitted field strength. This means that the level of harmonics being radiated directly by the oscillator can easily be above the FCC limit if care in circuit layout is not exercised. Oscillator and output leads, including ground returns, should be kept as short as possible. Design and evaluation kits for both the 1871 and 1872 are now available for those who wish to eliminate construction-phase headaches.

Range versus terrain

The range to be expected with this low-power transmitter is dependent on the transmitting and receiving antenna heights and the local geography. Outdoors, the transmitted field strength can be expected to be similar to that of the color curves of Fig. 3, taken across an asphalt parking lot with a transmitter 3 feet above the ground. Wet grass or water and higher antenna locations will yield an increase in field strength for a given distance from the transmitter. In contrast, operation within buildings can drastically reduce range if they contain much metal. Metal furniture, refrigerators, filing cabinets or steel beams will cause dramatic local variations in field strength making any range predictions subject to large errors. However, in domestic environments, a range of at least 10 to 20 m can usually be attained.

But while the permissible output power is an important factor in determining the control range, of equal importance is the sensitivity of the LM1872 receiver.

Sensitive superhet

To obtain sensitivity along with good selectivity, the LM1872 (Fig. 2a) is configured as a single-conversion superheterodyne receiver. The local-oscillator and mixer stages are capable of operation up to 80 MHz with good conversion gain and low intrinsic noise. The intermediate frequency is 455 kHz, and a wide-range (97-dB) automatic-gain-control circuit is employed in the i-f amplifier to handle the wide range of input voltages typically encountered. This circuit also provides good immunity to voltage transients on the supply line. The active digital detector that follows raises the system gain to 88 dB. The resulting baseband signal is then applied to the decoding logic, so that the original signal information sent on each channel can be retrieved.

A high-gain precision comparator, a 30-μs integrator, and a 25-mV reference make up the unique digital detector. When the signal voltage from the i-f amplifier exceeds 25 mV (the detector threshold level), the comparator will drive transistor Q_{11} to discharge the envelope-detection capacitor, C_{12}. A period of 30 μs is normally required for the 1-μA current source to linearly charge C_{12} to the 3 V ($V_{cc}/2$) level necessary to fire the Schmitt trigger. But the presence of the 455-kHz carrier waveform (2.2-μs period) prevents C_{12} from reaching this threshold until the carrier signal goes to zero during the interchannel time. The Schmitt will respond 30 μs later. This delay does not upset system sync since the LM1872 decoder responds only to the negative edges of the modulation envelope.

Recovering the data

The decoder (Fig. 2b) extracts the timing information from the carrier for the analog channels (of which there are normally two) and the pulse-count information for the digital channels (normally two). At the heart of the decoder is a three-stage binary (flip-flop) counter, A–C, that is advanced by one count on each negative transition of the modulated carrier envelope.

When the rf carrier drops out for the first modulation pulse, its falling edge advances the counter. During this time the sync capacitor C_6 is held low by transistor Q_{12}.

When the carrier comes high again for the variable channel interval, C_6 ramps toward $V_{cc}/2$ through the 100-kΩ resistor but is unable to reach it in the short time that is available. At the end of the pulse, the carrier drops out and the counters advance once again. The sequence is repeated for the second analog channel.

Gates G_1 and G_2 decode the analog channels by exam-

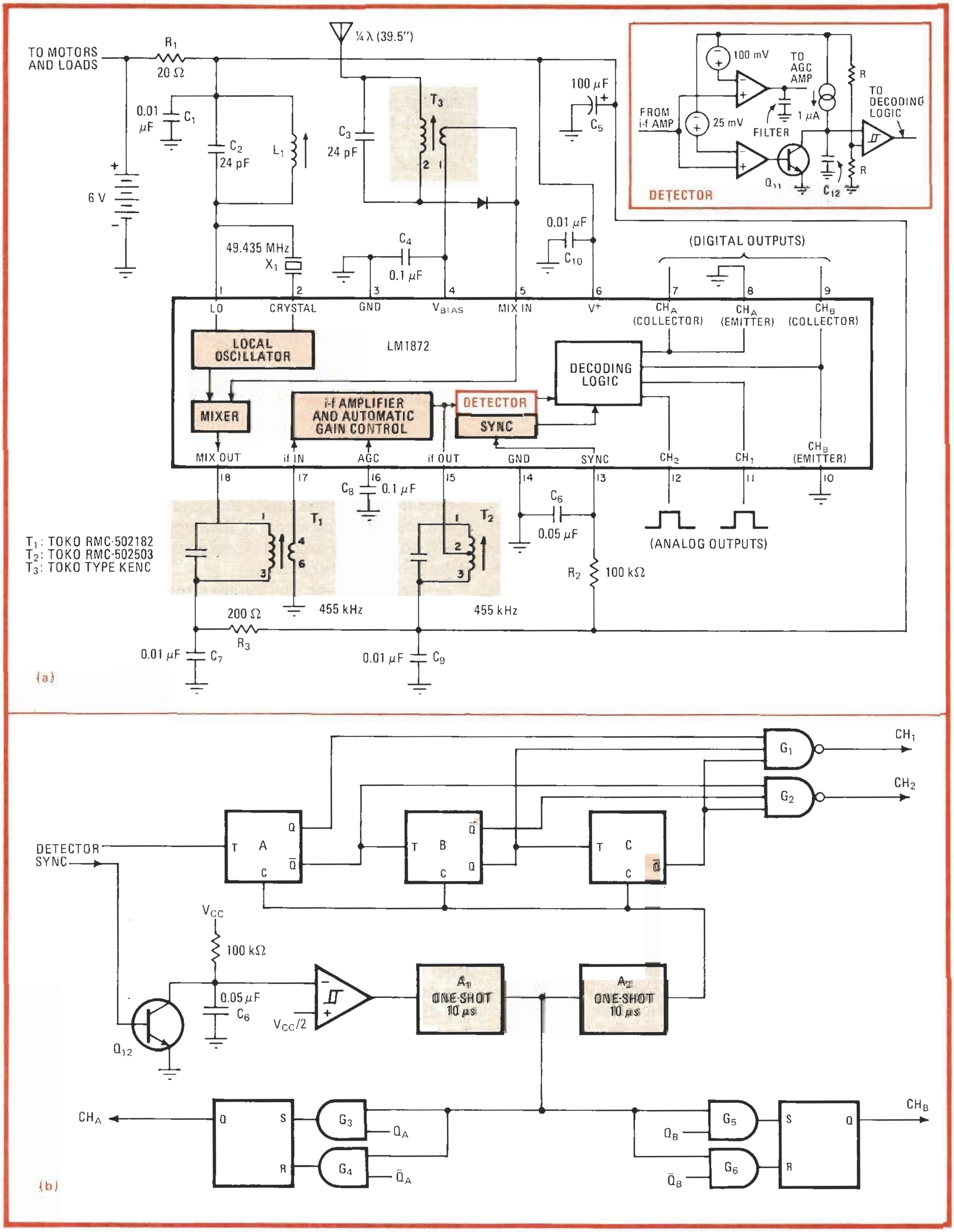

2. Linkage. LM1872 (a) demodulates up to four channels of incoming data, converting it into positional data for model vehicle's analog- and digital-channel servos. Single-conversion superhet is built on par with standard a-m receiver, except for digital decoder (b), which is needed for extracting the timing and pulse-count data from carrier in order to deliver the proper channel command to its corresponding servo.

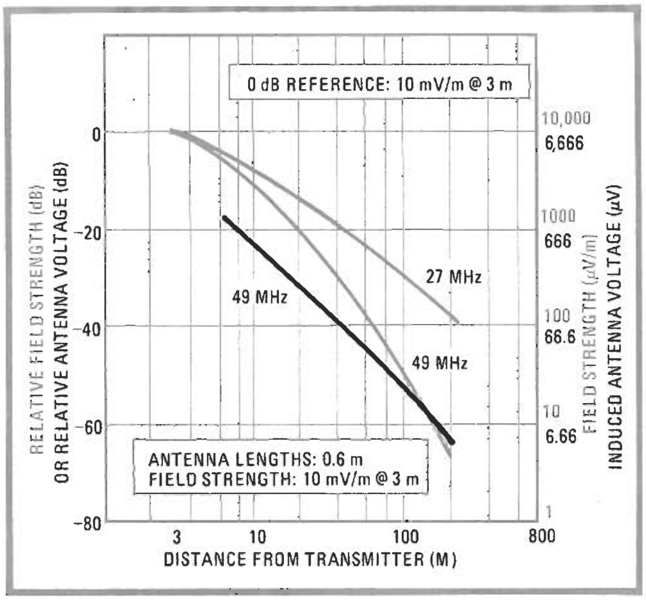

3. Profile. The field transmitted by the 1871 (color curves) induces a voltage at the 1872 receiver's antenna (black curve) sufficient for operation at 100 m. The receiver's automatic-gain-control threshold is reached at an input voltage of 250–280 μV.

ining the counter's binary output to identify the time slots that represent those channels. Decoded in this manner, the output pulse width equals the sum of the standard interpulse time and the variable pulse width representing channel information. A Darlington output driver then delivers the channel pulses to their corresponding servos.

Following the transmission of the second analog channel, one to four (in this case, two) pulses representing the digital information are received in the manner outlined in the detector discussion. Up until the end of the pulse group frame period, the decoder responds as if these pulses were analog channels, but it delivers no output. At the conclusion of the frame, the sync pulse is sent. Because the sync time is always made longer than the period of the sync timer (pin 13), the timer can deliver a signal to monostable (one-shot) multivibrator A_1. The first A_1 enables gates G_3–G_6 to read the state of flip-flops A and B into a pair of RS latches.

The latches can source or sink up to 100 mA, thus serving as an ideal device for transferring the digital command to its servo. If A or B, and thus its corresponding latch, is at logic·1, then its respective servo will be activated. Upon conclusion of the read pulse, one-shot A_2 is triggered, the counter is reset, and the chain is ready for the next frame.

The motor noise factor

The voltage induced by this encoder into a receiving antenna 0.6 m in length at 49 MHz is plotted in the solid black curve of Fig. 3. As seen, the maximum typical outdoor range will be 100 meters. The minimum receiver sensitivity needed to effect a successful command has been set at 15 μV nominal. Higher sensitivities can be easily achieved and the range possibly increased significantly, but the high-noise environment created by inexpensive servo motors themselves makes this consideration impractical for low-cost applications.

The automatic-gain-control (AGC) threshold is reached for an input of 250 to 280 μV from the antenna. This signal level corresponds to a position roughly 25 m distant from the transmitter. At the detector threshold level (12 dB below the AGC threshold), the antenna signal is 60 to 70 μV, corresponding to a minimum range between 50 m and 60 m. To run a small vehicle on a received signal of only 60 μV does require good suppression of motor noise. Although the LM1972 is immune to noise transients on the common supply lines, rf noise generated by the motor brushes will always be picked up at the antenna or i-f transformer windings. Motors with wire or carbon brushes are usually better in this respect than motors with metal-stamping brushes, but even the latter can usually be effectively suppressed by inductors mounted close to the brush leads. In applications where the drive or servo motors are more remote from the antenna circuit, the LM1872 can be designed with higher sensitivity. At the licensed frequencies around 72 MHz, the circuit is able to operate with a signal below 2 μV at the antenna input.

Four-channel flight

The 72-MHz band is intended primarily for control of model aircraft, which often requires more than two analog channels. Expansion to four analog channels is easily accomplished by modifying the LM1871 encoding waveform such that channels 1, 2, 4, and 5 are pulse-width–controlled by potentiometers. Channel 2 is made to emit a fixed long pulse (5 ms) such that after decoding channels 1 and 2 at pins 11 and 12, the LM1872 will recognize channel 3 as a sync pulse and reset the counter chain. Simultaneously, both digital channel outputs will be latched low and then channels 4 and 5 will be decoded at pins 11 and 12. Because the digital channels are at a logic 1 (high) during encoding of channels 1 and 2 but are at a logic 0 during encoding of channels 4 and 5, they can be used to steer the analog channels—providing four independent analog controls.

This type of transmitter encoding may also be used to provide simultaneous control of four independent single-channel receivers, each receiver using the digital channel output to identify its control pulse.

Other transmission media

Although the LM1871 and LM1872 have been designed primarily as an rf link, other alternatives are possible, including common carrier transmission, ultrasonic, or infrared data links. To use the LM1872 as an infrared receiver, the local oscillator is defeated and the mixer stage runs as a conventional 455-kHz amplifier. For an ac line link, a 262-kHz i-f is more suitable but will have a similar configuration. The choice of carrier will depend largely on application—rf links being suited to relatively long-range outdoor mobile control, infrared and ultrasound to applications where room-limited transmission is needed for privacy. Common carrier will apply best to stationary locations where communications is desired without additional wiring around a building. Additional information is available in the application notes for the 1871 and 1872. ☐

REMOTE COMMANDER

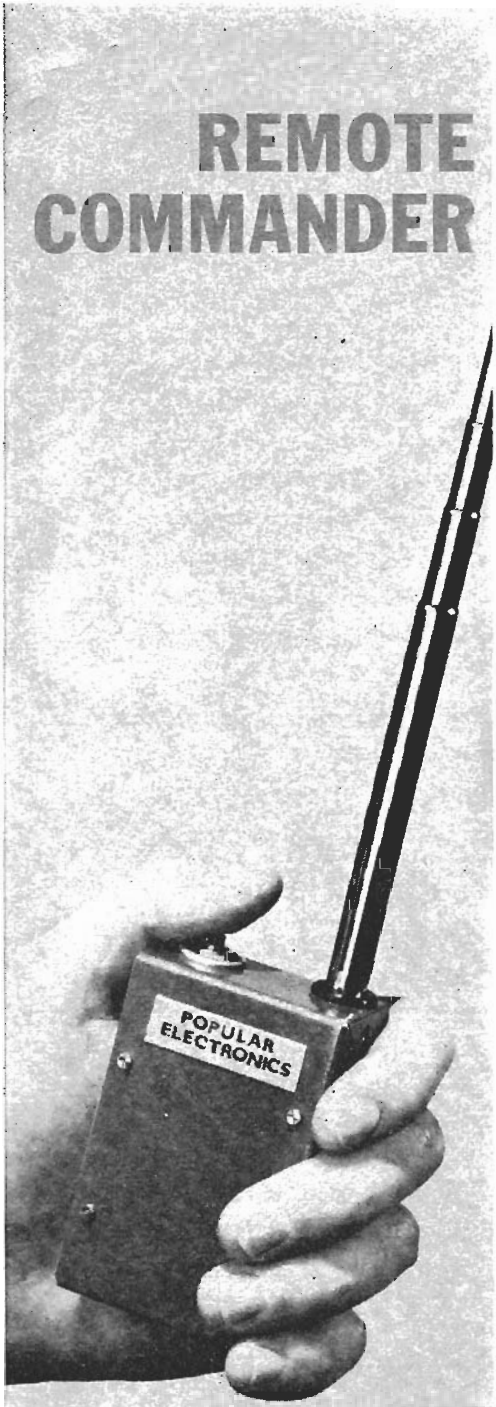

LET THIS
RADIO CONTROL SYSTEM
TURN ON AND OFF
YOUR RADIOS, TV'S,
LAMPS, ETC.,
UP TO 500 FEET AWAY

By ELDEN C. MAYNARD, K6SAI

THE "REMOTE COMMANDER" radio control (R/C) system can save you time and energy inside and near your home. It lets you take care of little jobs, like turning TV sets, radios and lights on and off from remote locations. Outside your home, the system is a real convenience; it can be rigged to a garage door opening and closing setup that can be controlled with the touch of a button—you don't have to get out of your car in even the stormiest weather.

The system is made up of a transmitter that is compact and light enough in weight to be carried in your shirt pocket and an equally compact receiver. In operation, the receiver remains in a fixed location near the device being controlled, while the transmitter can be moved to any location within range of the receiver. No physical link between the two units is required, so you are not limited to a few "strategic" locations—any location you happen to be at is strategic when you have the transmitter with you.

The "Remote Commander" R/C system was originally conceived as the controlling device for the "Pulse Command Responder" (see page 47 of this issue). If used with the responder, it is connected as shown in Fig. 1. However, the responder is not required for operation of the system. The "Remote Commander" can be used with an inexpensive power relay to control a single device.

Of course, being a radio control system, the "Remote Commander" can also be used for controlling model airplanes, boats and racing cars.

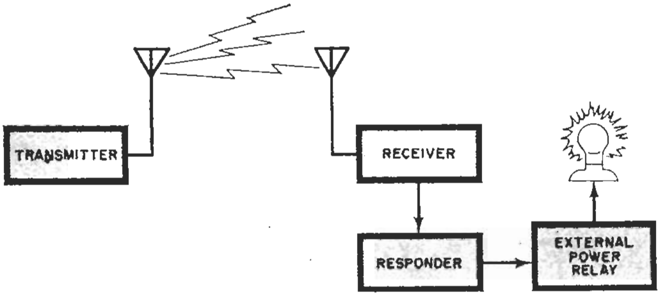

Fig. 1. "The Remote Commander" can be used as an R/C remote control device for the "Pulse Command Responder" (page 47) if the setup is as shown above.

How The System Works. The two devices that make up the major elements of the system are reproductions of actual manufacturer circuits. (The schematic shown in Fig. 2 is a Mark II "Mule" tone transmitter, and Fig. 3 is a Model "4" superregenerative tone receiver, both made by Controlaire Division of World Engines, Incorporated.)

The transmitter circuits (Fig. 2) develop a 26.995-MHz carrier and an 800-Hz modulating tone, generated by crystal controlled oscillator *Q1* and blocking oscillator *Q4*, respectively. The modulating tone is amplified through *Q3* before it is passed on to *Q2* where it modulates the r.f. carrier. After amplification through *Q2*, the resulting tone-modulated signal is coupled through *C1* to the antenna and finally radiated into space.

The receiver's antenna (see Fig. 3) picks up this signal and passes it to superregenerative detector *Q1*. Transistor *Q1* operates as an interrupted oscillator that generates a quenching voltage and maintains the *Q* of tuned circuit *L1-C4* at maximum (on the border line just before *Q1* goes into oscillation).

The r.f. carrier is shorted to ground through *C6*, and the modulating tone is transformer-coupled *via T1* to audio amplifiers *Q2*, *Q3*, and *Q4*. When *Q4* conducts, *K1* energizes.

The input sensitivity of the receiver is 4 microvolts or better and is directly attributable to the use of a superregenerative detector.

When *K1* energizes, the load being controlled either receives or is denied power,

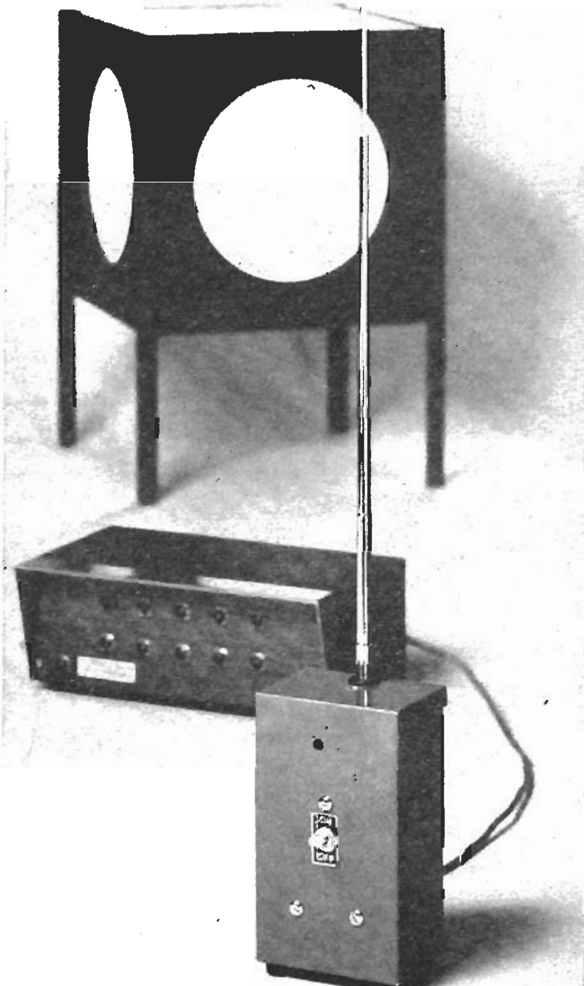

Fig. 2. Transmitter is crystal-controlled to conform with the FCC specifications regarding carrier frequency stability. Output consists of a 26.995-MHz carrier signal, modulated with an 800-Hz tone.

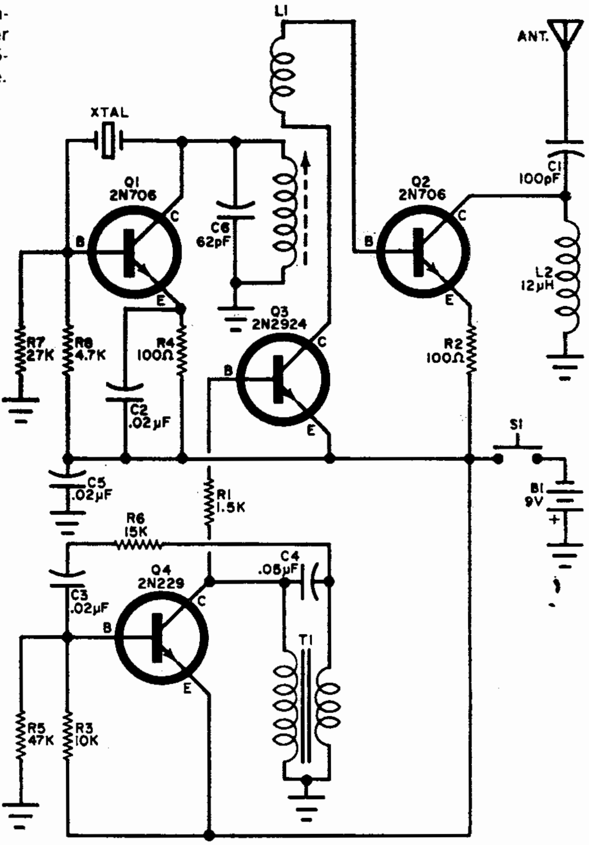

TRANSMITTER PARTS LIST

B1—9-volt battery
C1—100-pF ceramic capacitor
C2, C3, C5—0.02-µF ceramic capacitor
C4—0.05-µF ceramic capacitor
C6—62-pF ceramic capacitor
L1—R.f. coil assembly (See Text)
L2—12-µH radio frequency choke
Q1, Q2—2N706 transistor
Q3—2N2924 transistor
Q4—2N229 transistor
R1—1500-ohm
R2, R4—100-ohm
R3—10,000-ohm
R5—47,000-ohm
R6—15,000-ohm
R7—27,000-ohm
R8—4700-ohm
All resistors ½ watt
S1—S.p.s.t. normally-open momentary action push-button switch
T1—10,000- to 1000-ohm impedance matching transformer
XTAL—26.995-MHz crystal (available from Texas Crystals, 1000 Crystal Dr., Fort Myers, Fla.)
*1—Printed circuit board**
1—Antenna (similar to Lafayette Radio Electronics No. 99 H 3008)
Misc.—Metal box, battery clip, ½" rubber grommet, hookup wire, solder, hardware, metal strip, insulator, etc.

**See Receiver Parts List.*

Fig. 3. Receiver is a simple, single-channel superregenerative unit employing a relay-type output. Incoming signal is detected by Q1 and a 800-Hz tone is passed through amplifier stages Q2, Q3 and Q4. The amplified tone from Q4 energizes K1.

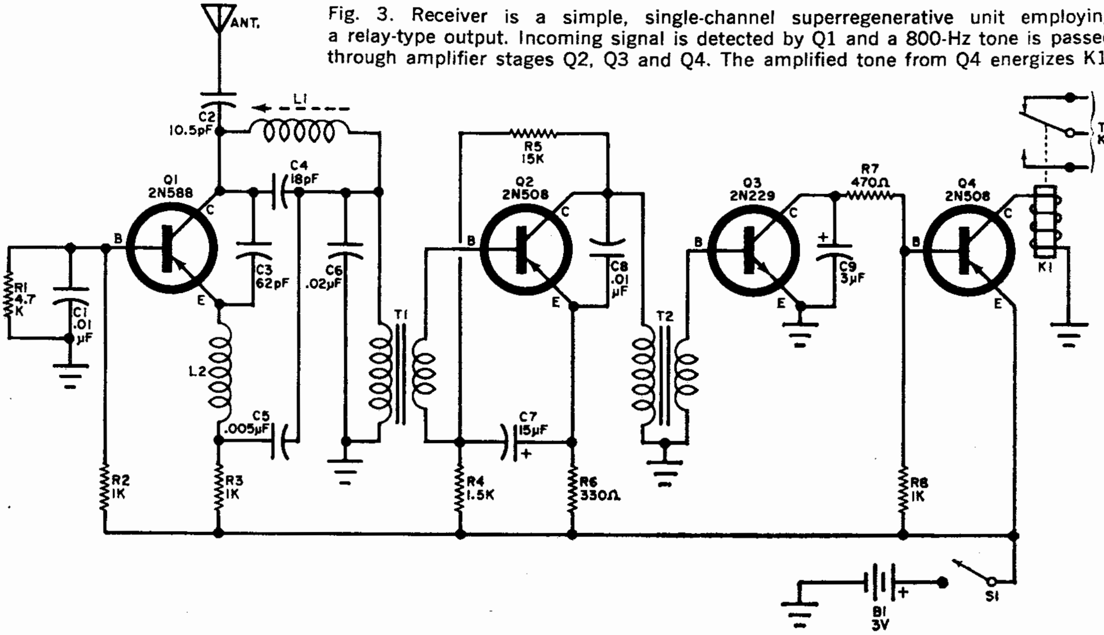

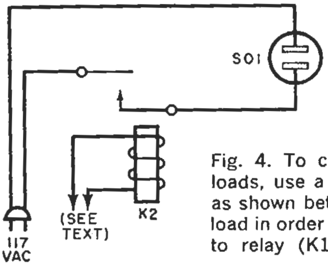

Fig. 4. To control high power loads, use a power relay wired as shown between receiver and load in order to prevent damage to relay (K1) in the receiver.

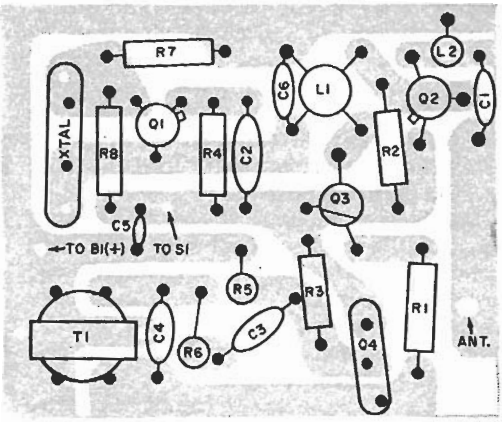

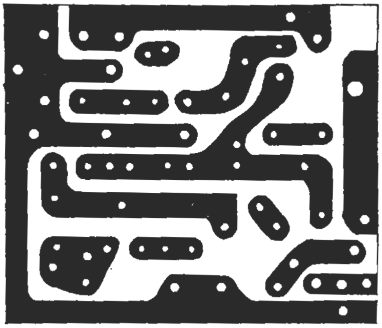

Fig. 5. Transmitter (directly above) and receiver (below right) etching guides are shown actual size. The layouts show parts location and orientation on the boards to facilitate easy component mounting.

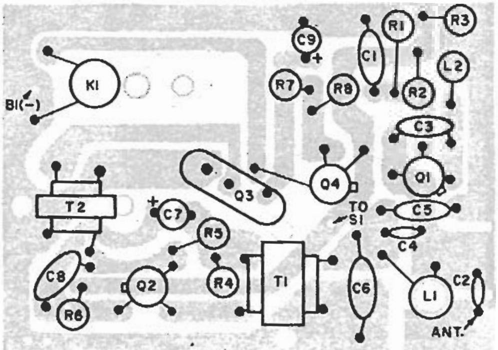

depending on the pair of contacts to which the load is connected. The contacts of *K1* are designed for low-voltage and low-power loads. Therefore, they must be protected against overloading and arcing through the use of low-voltage external power relay *K2* (Fig. 4) and a power source compatible with the requirements of *K2*'s solenoid winding.

For normally-on operation of the load being controlled, *K2* should be connected to the upper pair of *K1*'s contacts. Conversely, for normally-off operation *K2* should be connected to the lower contacts. When wiring *K2* and its power source across the contacts of *K1*, a con-

RECEIVER PARTS LIST

B1—3-volt battery
C1, C8—0.01-µF ceramic capacitor
C2—10.5-pF ceramic capacitor
C3—62-pF ceramic capacitor
C4—18-pF ceramic capacitor
C5—0.005-µF ceramic capacitor
C6—0.02-µF ceramic capacitor
C7—15-µF, 15-volt electrolytic capacitor
C9—3-µF, 15-volt electrolytic capacitor
*K1—S.p.d.t., 50-ohm subminiature relay**
K2—See text
L1—R.f. coil (See Text)
L2—12-µH radio frequency choke
Q1—2N588 transistor
Q2, Q4—2N508 transistor
Q3—2N229 transistor
R1—4700-ohm
R2, R3, R8—1000-ohm
R4—1500-ohm
R5—15,000-ohm
R6—330-ohm
R7—470-ohm
S1—S.p.s.t. switch
All resistors ½ watt
*T1, T2—10,000- to 1000-ohm impedance matching transformer with tab mount**
*1—Printed circuit board**
1—Telescoping antenna (See Transmitter Parts List).
Misc.—Small metal box, 3¼" x 2⅛" x 1⅛" utility box, ½" rubber grommet, 3-lug terminal strip, hookup wire, solder, hardware, insulator, battery clip, etc.

**These parts obtainable from Controlaire Electronics, World Engines, Inc., 8960 Rossash Rd., Cincinnati, Ohio 45236.*

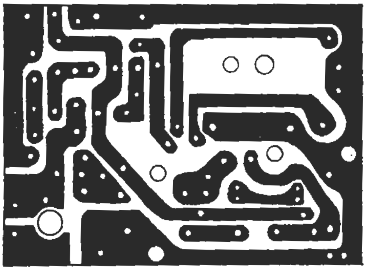

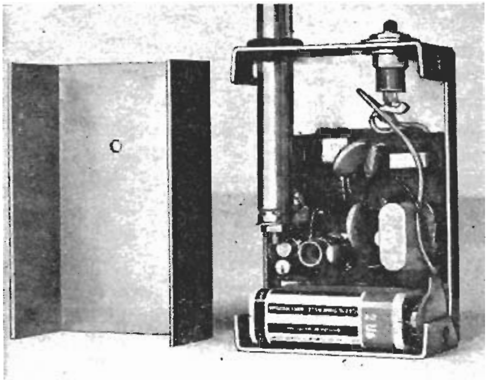

Fig. 6. Transmitter case should be smallest possible size, but large enough to house circuit board, battery and switch, and provide support for antenna.

tinuous series circuit should be obtained, so that *K1*'s contacts act as a switch between the low voltage supply and *K2*.

Construction. While small size and light weight are not important in the receiver, they are absolute necessities in the transmitter for maximum portability. Both circuits should be built on printed circuit boards, if for no other reason than to minimize construction time.

You can etch and drill your own printed circuit boards using the drawings in Fig. 5 to guide you, or you can buy them already etched and drilled (see Parts Lists). Coil *L1* in both the transmitter and receiver can also be home brewed. The transmitter coil consists of 3½ turns (upper winding) and 10¾ turns (lower winding) of #24 enameled wire. The receiver coil consists of 10 turns of #30 enameled wire. Both coils should be closely wound on ¼"-diameter coil forms with adjustable high-frequency powdered iron cores.

Mount all parts as close to the circuit boards as possible, but allow enough lead length between transistors and boards to permit proper heat sinking when soldering. All the resistors in the transmitter and a few in the receiver should be mounted "on-end" to conserve space.

When all parts are in place, solder them to the boards' foil conductors, being careful to prevent solder bridges between the closely spaced conductors. Then cut away the excess component leads as close to the boards as possible.

Mount the transmitter circuit board in the smallest size metal box that will house the board, battery and switch and provide a support for the antenna as shown in Fig. 6. Place a piece of insulating material between the bottom of the board and the metal box.

Drill a ½" hole in the top of the metal box, place a grommet in it, and slide the antenna into place, securing it to the board with a metal strip. Finally, mount the switch on top of the box near the antenna, and drill a small access hole in the box directly over *L1*.

The size of the box you use to house the receiver and its associated parts is unimportant. The main circuits—minus power switch, antenna and batteries—

(*Continued on page* 153)

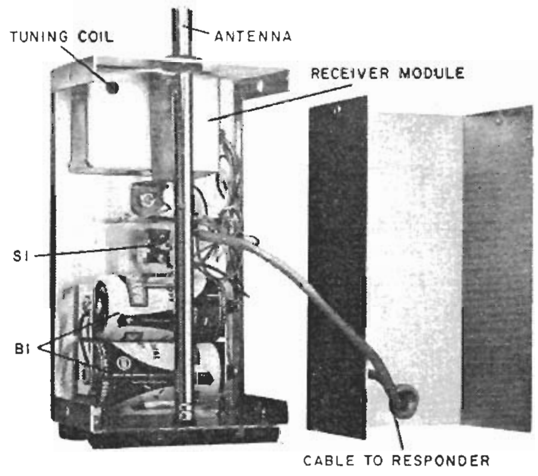

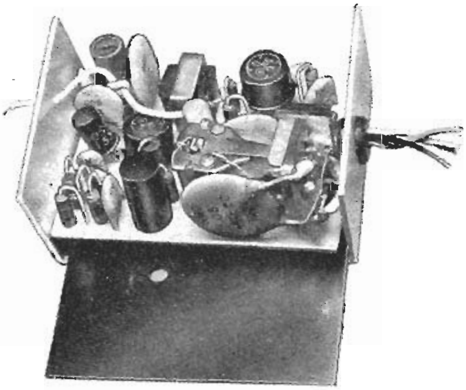

Fig. 7. For maximum shielding from outside interference, receiver circuit board should be mounted in separate metal case (above). Mount receiver module, switch, batteries and antenna in larger metal cabinet (left).

REMOTE COMMANDER

(*Continued from page* 14)

should be mounted in a separate miniature metal box as shown in Fig. 7, and then the small metal box should be mounted in a larger box. The same precautions taken for the transmitter also apply to the construction of the receiver: insulator between board and box, rubber grommets to insulate antenna from box, etc. Then drill a small access hole in the module case directly over *L1* in the receiver.

System Alignment. Either one or both of two methods can be used to tune the transmitter and receiver units in the "Remote Commander" R/C system for maximum range and sensitivity. The first method is the "seat-of-your-pants" technique requiring no test equipment of any kind. Simply tune the slugs in coil *L1* in both units so that *K1* in the receiver relay pulls in as soon as *S1* in the transmitter is depressed. Continue tuning the coils for the desired results several times, each time putting a greater distance between both units.

The second alignment method requires the use of a 0- to 50-milliamp meter movement. Alignment is first performed in the transmitter, then the receiver.

Connect the meter in series with the negative side of *B1* in the transmitter and *S1*. Depress *S1*, and tune *L1* for a maximum meter indication; then back off slightly. Remove the meter from the transmitter, and reconnect the negative side of *B1* to *S1*.

To tune the receiver, connect the meter movement between the positive side of the receiver's battery and *S1*. Depress the power switch on the transmitter and tune *L1* in the receiver for a maximum indication on the meter.

Tuning of both the transmitter and the receiver should be performed with each unit completely enclosed in its respective metal case.

The "Remote Commander" R/C system is now ready to go to work saving you time and energy. Simply connect it to the devices you wish to control and keep the transmitter handy in your shirt or pants pocket. –30–

OUT OF TUNE

Remote Commander (August, 1967, page 45). Several of the parts in Fig. 5 are numbered incorrectly, and *T1* on the transmitter board is shown improperly oriented. The drawings below contain the necessary corrections for

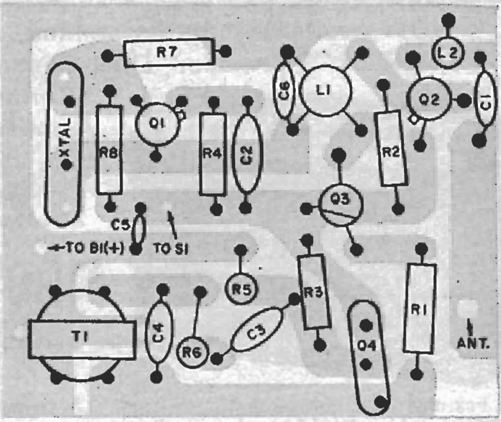

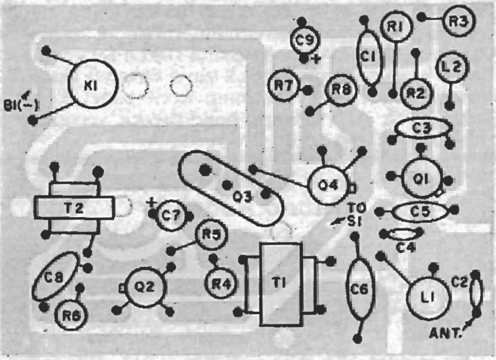

proper operation of this project. Clip out these drawings, and paste them over the ones in your copy of the August issue.

Radio Amateur Equipment Samples (August, 1967

BUILD THE
PULSE COMMAND RESPONDER

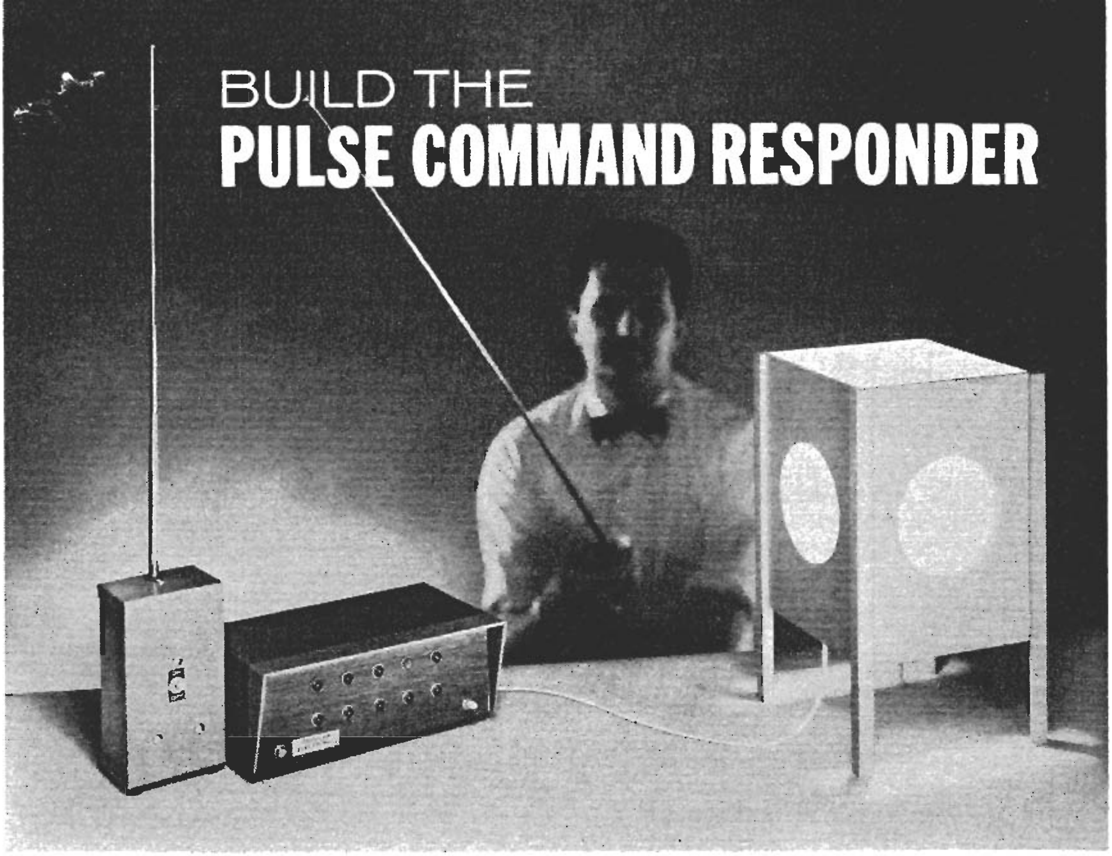

YOU CAN CONTROL ALMOST ANY NUMBER OF ELECTRICAL DEVICES FROM ALMOST ANYWHERE

By ELDEN C. MAYNARD, K6SAI

THE "Pulse Command Responder" is perhaps one of the most versatile selective multifunction types of remote control centers you are likely to find anywhere. With just the touch of a single button, you can control many different electrical circuits individually and at any time. You can turn your TV set, lamps, motors, and just about any other electrical device on and off from one or more locations, and at distances of up to several hundred feet.

The Responder can be operated by radio control (R/C), carrier-current remote control, or direct "on-line" switching. For R/C operation, a transmitter and a receiver—of the types for controlling model airplanes—are suitable. The carrier-current remote control also has a transmitter and a receiver; but instead of the signal radiating from the transmitter into space, it is coupled to the receiver by way of your house wiring. (Construction of a "Carrier Current Remote Control System was described in the 1968 Winter Edition of ELECTRONIC EXPERIMENTER'S HANDBOOK.) The "on-line" switching technique calls for a 3-wire hookup going from the Responder to one or more strategically-located push-button switches. A complete R/C system is illustrated in Fig. 1.

Regardless of the type of control employed, operation of the Responder remains the same: a number of pulses are used to trigger an electronic switching circuit, which in turn controls a stepping-type relay. Except for the first two steps, each step on the relay is connected to a different device to be controlled.

Unlike certain sequential or stepping relay control devices, no unwanted circuit or device is energized even momentarily while the stepping relay "finds" a

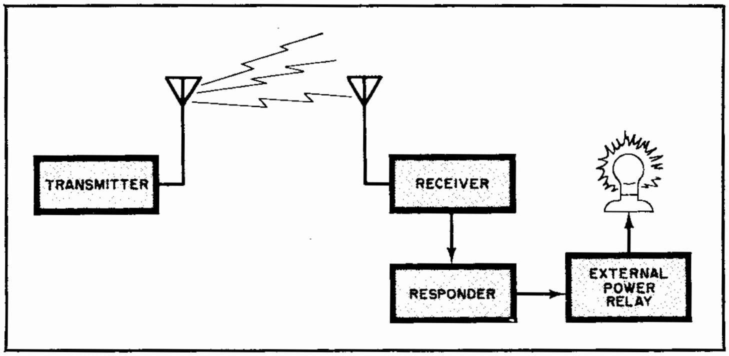

Fig. 1. The Responder can be radio-controlled if it is connected as shown.

wanted position. For example, you can start a motor in step 5, without affecting anything connected to steps 3, 4, 6, etc., and then, at a later time, control the devices on steps 4 or 7 without affecting the action on step 5. (Steps are on *K5* as shown in Fig. 2.)

The Responder is foolproof. It will seek a numbered step in accordance with a like number of pulses on the first round. On the second round, it will reset itself almost instantly in the presence of a single pulse. Sending up to three pulses on the second round will have the same effect as a single pulse. However, not until the stepping relay is in its *0* position can it accurately respond to a given number of pulses for a given position.

By tying steps *1* and *2* together and connecting them to the reset function (*K4* in Fig. 2), a certain amount of noise immunity is built into the Responder. It will not activate any control circuits unless at least three pulses are received in rapid order. This feature is especially desirable for R/C operation, or where the Responder may be accidentally pulsed.

How It Works. An s.p.d.t. switching mechanism, such as that shown for *K1* in Fig. 2, is used to connect a positive or a negative voltage as needed to *K3*, *K4*, *K5* and the base of *Q1*. This switch (on *K1*) can be part of a relay in an R/C receiver or in any other appropriate external control device. (Note that *K1* is actually not considered as a part of the Responder, but rather as an integral component of whatever external control system is used.)

Relay *K1* (or its equivalent) switches the voltage from positive to negative and back to positive for each pulse. Therefore, this switch should be a spring-loaded affair which always returns to an upward position (positive voltage on the normally-closed set of contacts).

Before tracing the action of the positive and negative voltages on *Q1*, the various diodes and relays *K2*, *K3*, *K4* and *K6*, you should know how *K5* works. Both the *Advance* and *Reset* coils of *K5* operate on 117 volts a.c. Since the control voltages are on the order of 6 volts d.c. in the Responder, relays *K3* and *K4* are used to switch the *Advance* and *Reset* coils, respectively.

Each time the *Advance* coil is ener-

PARTS LIST

*C1, C2—100-μF, 15-volt electrolytic capacitor**
*C3, C6—6-μF (or 5-μF), 15-volt electrolytic capacitor**
*C4, C5—0.02-μF ceramic or disc capacitor**
*D1, D2, D3, D4—1N4004 (or 1N4001) diode**
I1, I2—6-volt lamp—see text
K1—See text
K2—6-volt s.p.d.t. relay
K3, K4—6-volt s.p.s.t. relay
K5—117-volt a.c. stepping relay (Guardian MER-115 stepper/reset, 24 contacts, or similar)
K6—6-volt power relay
Q1—2N217 transistor
*RECT 1—2-amp, 50-PIV rectifier bridge (International Rectifier 10DB2A-C, or similar)**
*R1, R2—100-ohm, 1-watt resistor**
S1—S.p.s.t. switch
T1—Filament transformer: primary, 117 volts; secondary, 12 volts, 1 ampere, center-tapped
*1—Printed circuit card, or 3¼" x 4" perforated phenolic board—see text***
1—Aluminum or steel cowl-type utility box
Misc.—Indicator lamp sockets, line cord, hookup wire, spacers, solder, hardware, barrier strip

The asterisked parts are available from Southwest Technical Products Co., 219 West Rhapsody, San Antonio, Texas 78216.

*Included in package of components for printed circuit board, $5.

**Drilled and etched fiberglass printed circuit card, $2.

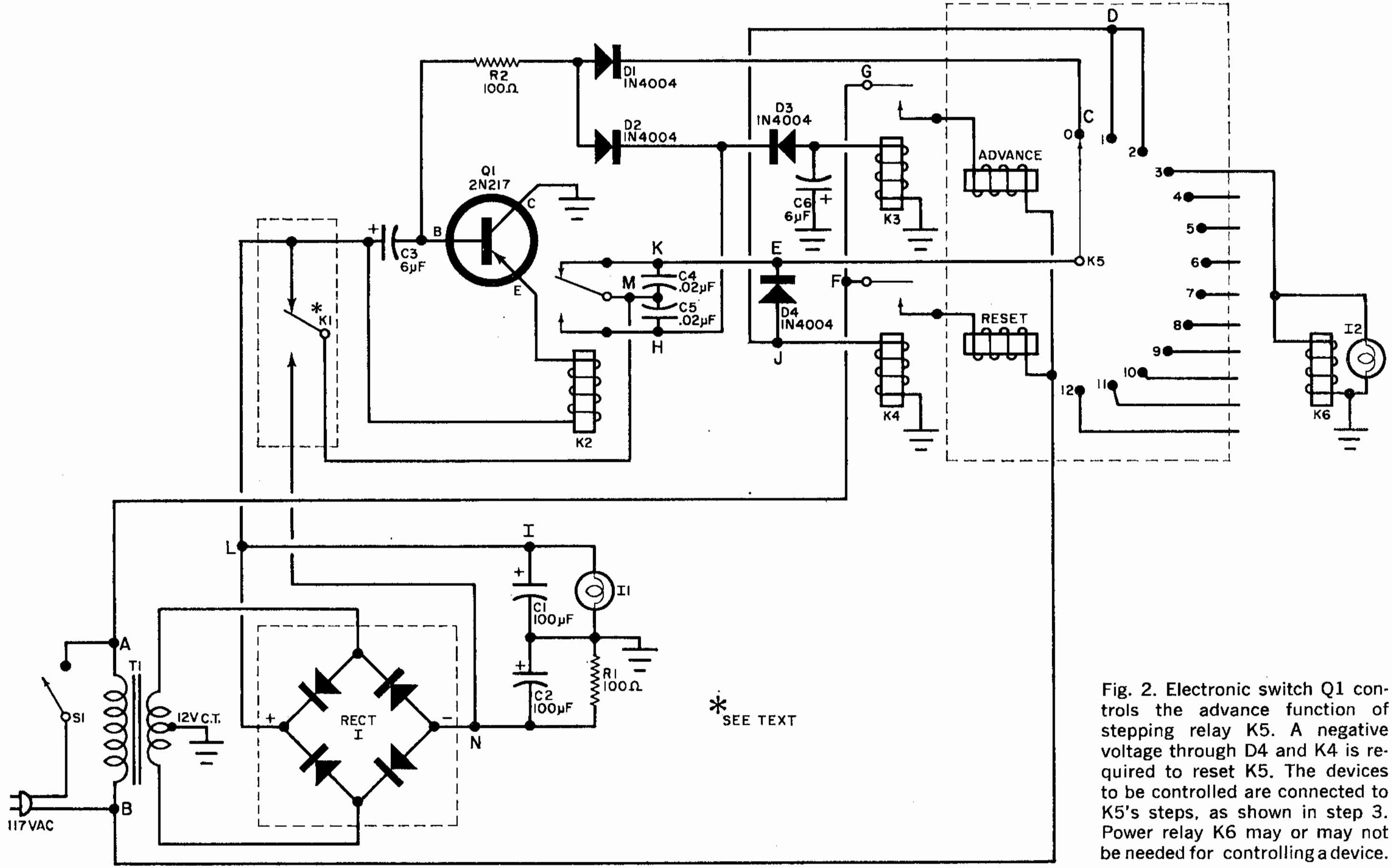

Fig. 2. Electronic switch Q1 controls the advance function of stepping relay K5. A negative voltage through D4 and K4 is required to reset K5. The devices to be controlled are connected to K5's steps, as shown in step 3. Power relay K6 may or may not be needed for controlling a device.

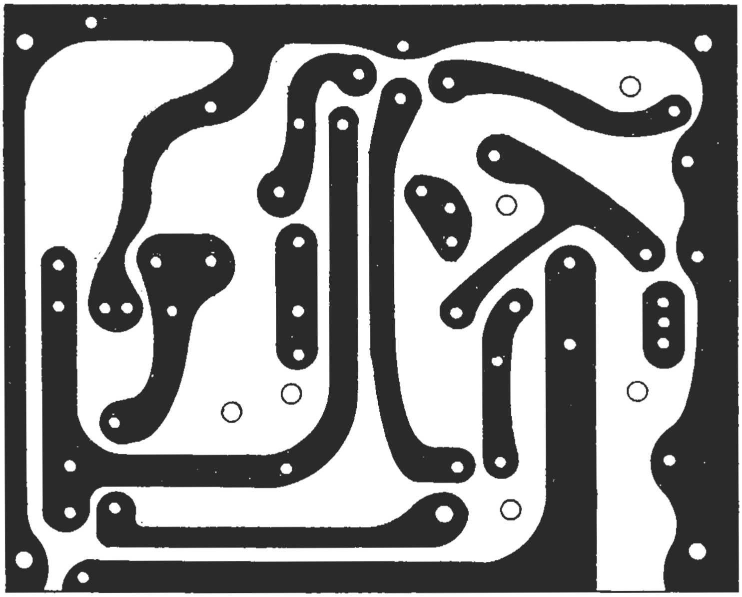

Fig. 3. If you decide to make your own printed circuit board, use this full-size drawing as a guide to proper etching of foil side of board.

gized, *K5* advances one step and holds. When the *Reset* coil is activated, *K5* is spring-returned to its *0* step.

When *S1* is closed and power is applied, the pilot lamp, *I1*, lights and the Responder is ready to go to work. In the Responder's quiescent state, *Q1* does not conduct and all relays and coils are de-energized. Note that *K6*—like *K1*—is not considered to be part of the Responder proper.

When *K1* is energized, a negative voltage is applied through the upper contacts of *K2* to *D4* and the armature of *K5*. In step *0* on *K5*, the negative voltage is fed to *D1* and forward-biases *Q1* to allow it to conduct. When *Q1* conducts, *K2* becomes energized, which removes the negative voltage from the *D4-K4* circuit and applies it to the *D3-K3* circuit. Each time *K3* sees a negative pulse, it advances one step. Capacitor *C3* holds *Q1* conducting and *K2* energized to prevent the *Reset* coil from being activated. As long as *K2* is energized, no control voltage reaches any of the steps on *K5*, and no externally controlled circuits are affected until the Responder settles down to a quiescent state. The train of pulses must come in a rapid enough succession to be within the discharge time of *C3*.

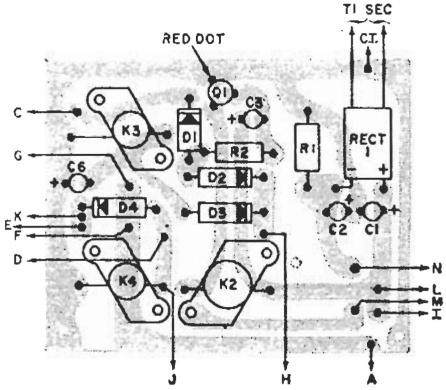

Fig. 4. Parts layout is not critical, but be careful not to confuse polarity of diodes, and the connections to the relays' frames, coils, and contacts.

If *K5* is on step *3* or higher when *K1* is energized, the negative voltage cannot get to *Q1*, and now *D4* is able to go to work and pass this voltage on to *K4* and reset *K5*. Notice that steps *1* and *2* on *K5* (the noise immunity circuits) are connected back to *K4*; if for any reason *K5* is advanced only to either step, *K5* will reset itself with a positive or a negative voltage, but not until *K1* de-energizes, *Q1* in turn stops conducting, and *K2* releases.

Transformer *T1*, full-wave bridge rectifier *RECT 1*, *C1*, *C2*, *R1* and *I1* provide suitable positive and negative voltages to operate the Responder. Pilot lamp *I1* does double duty; it helps power supply regulation as does *R1*, and it also serves as an on/off indicator. Lamp *I2* is optional. Capacitors *C4* and *C5* are used for relay contact protection; a 0.02-μF capacitor can also be placed across the contacts on *K3* and another on *K4*, if you wish. Capacitor *C6* tends to prevent chatter and helps *K3* to perform in a more positive manner.

Circuits to be controlled having voltage and current requirements different from the 6 volts d.c. available at *K5*'s steps, or for continuous operation—once activated, require relays (*K6*, etc.) or other switching devices (SCR's) to be interposed between *K5* and the controlled circuit.

Construction. The Responder can be built into any 8″ x 6″ x 3″ enclosure. Parts placement is not critical, but perhaps the most suitable layout for the small parts is on a printed circuit board or plain perforated phenolic board. If you want to make your own printed circuit board, follow the actual-size drawing shown in Fig. 3. You can buy one already etched and drilled for $2 postpaid (see Parts List).

If you use a circuit board, you can follow the same general layout for parts as shown in Fig. 4. When mounting capacitors, diodes and transistor, be careful to observe polarity. After all parts are mounted, set the circuit board aside.

Drill the mounting holes for the circuit board, power transformer, indicator lamps, switch and stepping relay, referring to Fig. 5 for the general location of these major parts. Actual location of parts is not too important provided that the parts do not interfere with the circuit board or each other. To facilitate mounting of the board and other parts, secure *T1* to the metal case last.

Use ⅜″ spacers to get adequate clearance between the board and case. Optional indicator lamps (*I1*, *I2*, etc.) should be mounted on the front part of the case.

After all parts are mounted, wire the circuit in accordance with the schematic. For your convenience, the lettered points in Fig. 4 correspond to the same lettered points in Fig. 2.

Each of the steps on stepping relay *K5* should be connected to a suitable terminal strip or set of output jacks mounted on the back of the case, such as the jack marked "TO K6" in Fig. 5. Because only 6 volts d.c. is available at each step at any one time, power relays or circuits to be controlled should also be able to operate on 6 volts d.c.

Final Check. When construction of the Responder is complete, connect the pulsing device to satisfy the switching requirements for *K1* as shown in Fig. 1. Turn the Responder on, and pulse it once. Relay *K5* should advance to step 1. After a short delay, as *C6* discharges, the stepping relay should automatically reset to step *0*. The same is true when you pulse the responder twice, except that *K5* should first advance to step *2*. Check each of the other steps of *K5* by pulsing the Responder the same number of times as the step number you want, but between each selection of steps, reset *K5* to step *0* with one or two pulses.

When you are satisfied that the Responder is operating properly, you can connect your power relays and circuits to be controlled. Once you work with and get to know the Responder, you will find that its applications and functions are practically limitless. —30—

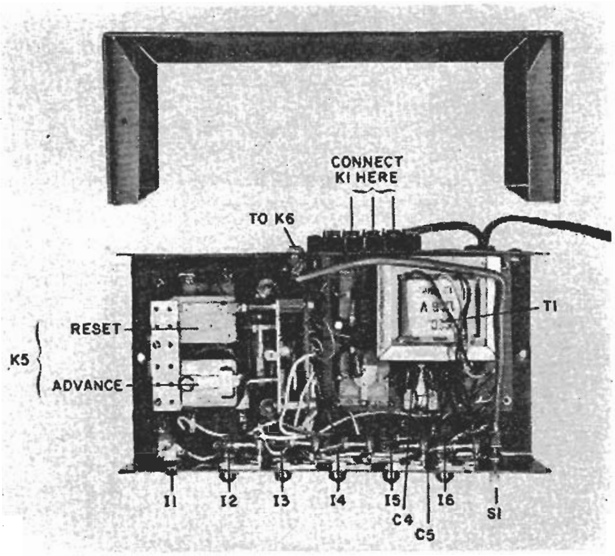

Fig. 5. Position the parts so that they do not interfere with each other or with the circuit board. Both Reset and Advance coils are 117-volt a.c.-operated and care must be exercised to keep them clear of the case. If necessary, use a larger case.

HOW TO

Interface R/C Servos

R/C servos are good for more than controlling model planes and cars. Here's a description of how they work, and some ideas on how you can use them.

DAN and JEANETTE PELTON

RADIO-CONTROL (R/C) SERVOS ARE GOOD for much more than just operating model aircraft or boats. They can be used to keep a signal generator on frequency, steer a small robot, govern your lawnmower, interface a computer to run a strip-chart recorder—in fact, those miniature servos provide just about the ideal electrical-to-mechanical interface. They are simple to use and cost-effective, and the circuits needed to drive them are simple, and easy to build—you can even put them together on prototyping boards.

How servos work

Servos are slow-running electric motors that can be stopped and started almost instantaneously. As long as they receive a control signal they run; when it stops, so do they. That makes them well suited for use in proportional-control systems, such as are used in model airplanes, boats, and cars. The control signals can be sent by radio, or fed directly to the servo-control circuits.

R/C servos generally operate from TTL logic-level voltages—about five volts—which makes them very convenient to interface with computer or other TTL circuits. The devices—which may generate several pounds of thrust—draw a maximum of 400 mA to 1000 mA, depending on the particular type used. Servo-control signals are pulses whose widths vary from one to two milliseconds in length; the servos convert that pulse-width-modulated signal into a precise mechanical movement.

Inside the servo housing is an IC that provides all the functions needed to convert the width of a pulse into the signals needed to drive the servo motor so that the output shaft is correctly positioned. Figure 1 shows a block diagram of a typical servo-driver IC and its connections to the servo motor. The output shaft of the servo motor is attached to a potentiometer. As the output shaft is driven by the motor, the voltage across the potentiometer varies. The amplitude of that voltage is directly related to the position of the output shaft, and the voltage is fed back to the servo-driver IC where it controls the time duration of an internal one-shot pulse generator.

When a logic-level input pulse reaches the servo-driver IC, two things happen. First, the internal one-shot pulse generator previously mentioned is triggered. The time duration of the one-shot's output pulse is controlled by the feedback voltage from the potentiometer on the output shaft of the motor. The duration of the output pulse is compared to that of the input pulse by two NAND gates. The result of the comparison will trigger one of the two pulse stretchers; that in turn will either set or reset the directional flip-flop.

(The pulse stretchers are required because in many servo applications—model aircraft, for example—as many as eight channels can be in use at the same time with information being transmitted sequentially to as many as eight servos. Under those circumstances, as many as 25 milliseconds may pass before a particular servo receives another input pulse. The pulse stretchers keep the servo motor running for most of the time between input pulses, keeping "chatter" to a minimum and allowing greater speed and efficiency.)

The output of the flip-flop will cause the servo motor to be driven by one or the other of the motor-drive circuits; the circuit selected will determine the direction in which the motor will turn. The motor

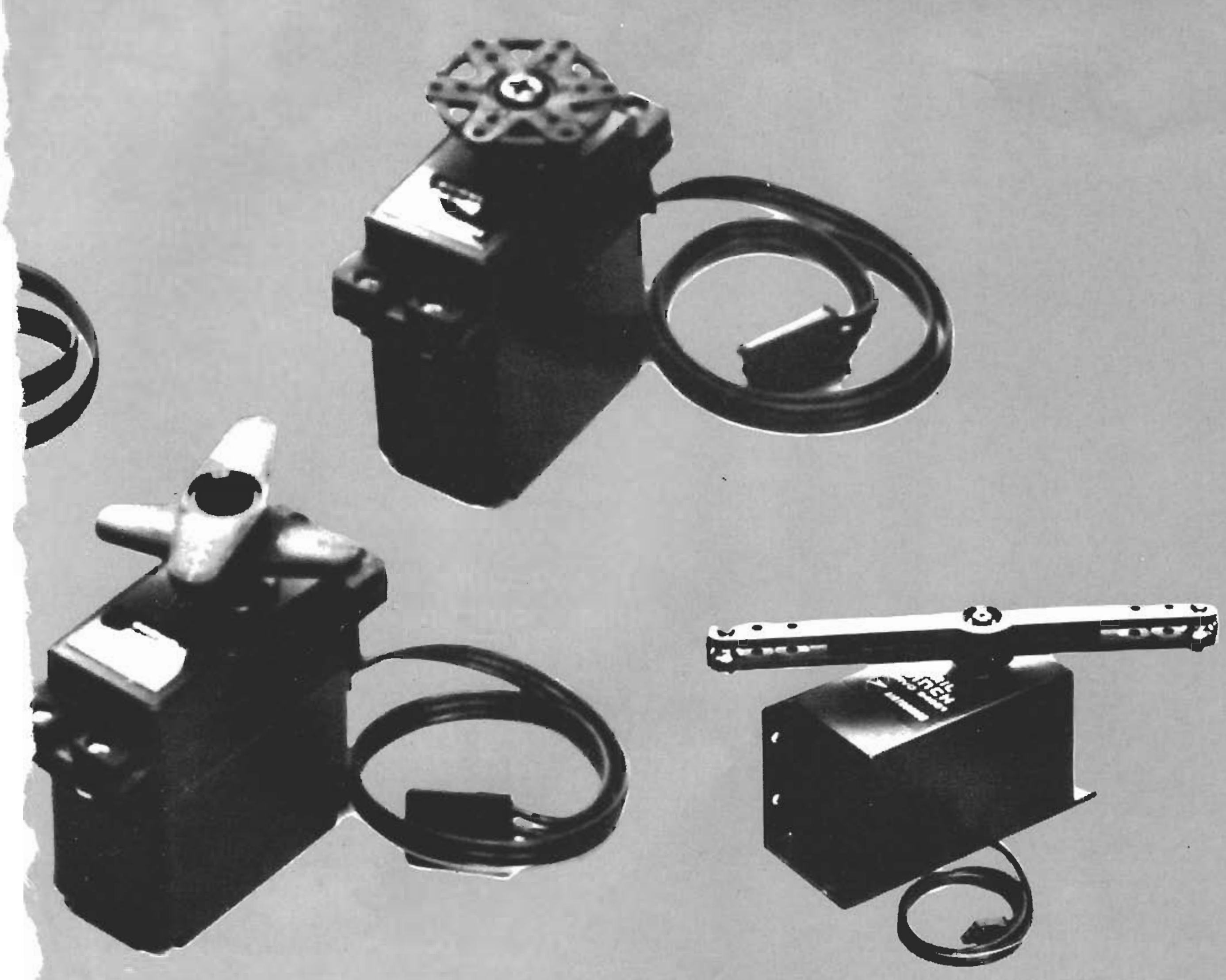

will turn the output shaft until it reaches a position that causes the input pulse and the pulse from the one-shot to be of equal durations.

A one-millisecond input pulse will drive the output shaft of the servo motor to one extreme, and a two-millisecond pulse will drive it to the other.

A servo-control circuit

In most applications, you will need to convert the amplitude of a DC voltage into a pulse-width-modulated signal that can be used to drive the servo motor. For example, you may have a remote TV camera that you want to be able to aim from your monitoring location. Your control console could have a joystick for that purpose which, when moved, would move the shaft of a potentiometer.

The output of the potentiometer would be a DC voltage related to the position of the joystick and would have to be translated into a pulse-width-modulated signal that could be used to control the servo. That signal can be generated by a single quad op-amp (one IC containing four separate op-amps) like National Semiconductor's LM324.

An easy-to-build PWM (*P*ulse *W*idth *M*odulation) circuit using that IC is shown in Fig. 2. Two sections of the IC (IC1-a and IC1-b) function as a ramp generator whose output is a sawtooth waveform. Op-amp IC1-c is a conditioner that limits the DC level and peak-to-peak swing of the input signal. The last section of the IC (IC1-d) compares the output of the signal conditioner with the ramp (triangle) waveform. The signal conditioner is adjusted to provide a comparator output that is compatible with the servo's requirements.

The heart of the ramp generator is IC1-b. It operates as an integrating amplifier with capacitor C1 acting as the integrating- or feedback-element of the circuit. If the output of IC1-a is negative, a current will flow through R4 and try to pull the inverting input of IC1-b down. In response, the current output of IC1-b will increase so the current flow through C1 continues to equal the current flow through the input resistor R4.

That charges C1 and, if nothing else were to happen, IC1-b's output would reach its positive limit and stay at that level. However, IC1-a is configured as a Schmitt trigger that monitors the output of IC1-b, and when IC1-b's output voltage reaches a certain point, IC1-a changes state (it goes high). Current then flows through D1 and R3, and the input of IC1-b goes high and its output drops rapidly. When it drops to a certain point, IC1-a changes state again, and the whole cycle repeats. The repetitive cycle generates a sawtooth waveform with a positive going ramp.

Adjustment

After you've built the circuit, if you have an oscilloscope available, connect its probe to the output of the comparator (IC1-d). Set the OFFSET potentiometer,

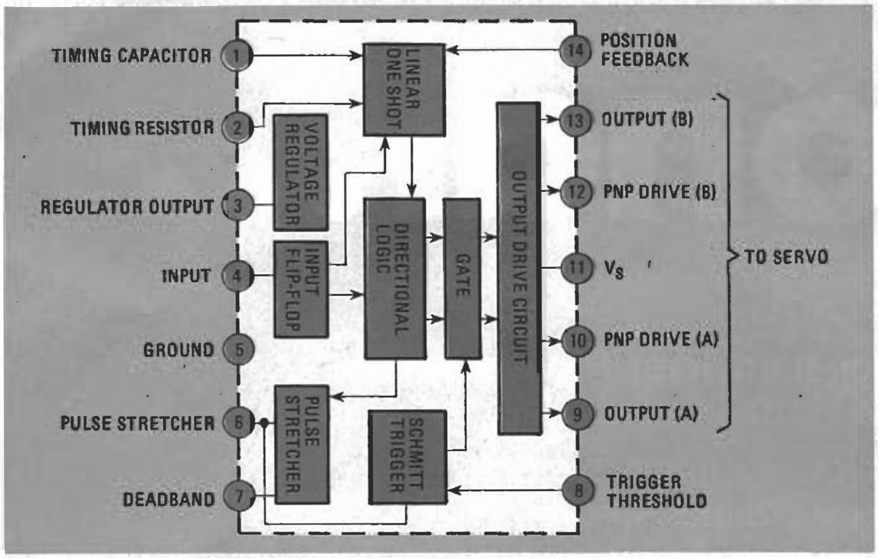

FIG. 1—SERVO-DRIVER IC DECODES input pulses and outputs signals that cause the servo motor to turn in one direction or the other.

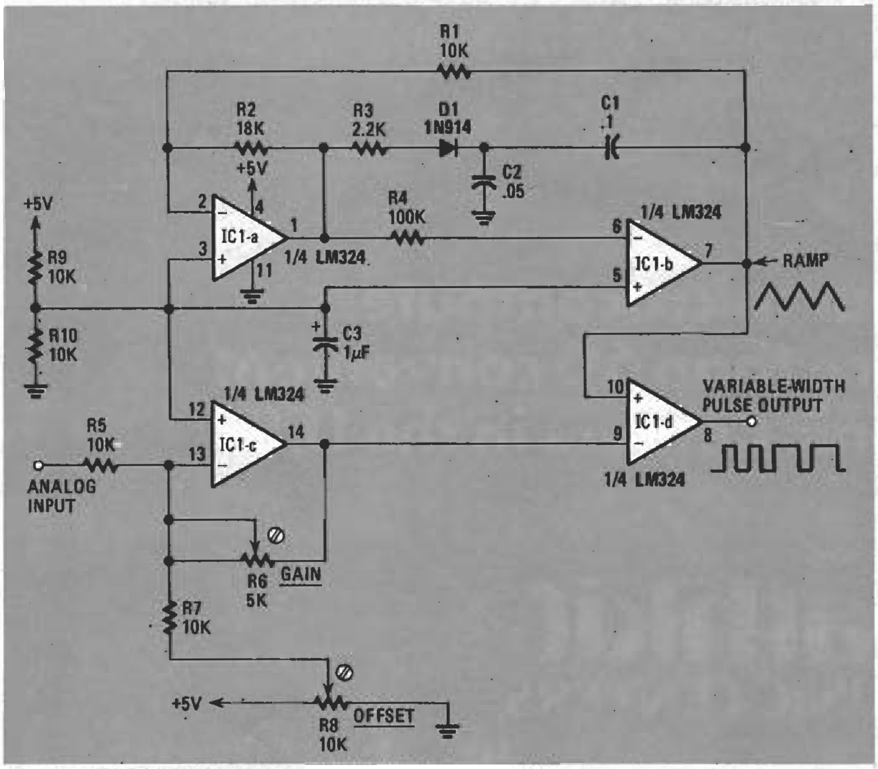

FIG. 2—ANALOG-TO-PULSE-WIDTH CONVERTER senses DC-voltage level and outputs a corresponding variable-width pulse-string to servo-driver IC.

R8, for a pulse width of about 3 ms. At the signal input (R5) apply the lowest voltage you are likely to use and observe the duration of the pulse on the scope (still connected to the output of IC1-d). Then apply the highest-level signal you expect to use and observe the pulse-width. Set R6 (GAIN) so that changing from one input-voltage extreme to the other results in a one-ms change in pulse duration. Once that is achieved, apply the lower-level signal to the input and adjust R8 for a two-ms pulse width. A high-level signal should then cause a one-ms pulse to be generated.

Connect your servo to the pulse-width output. The black or green lead of the servo is ground; red is the positive supply-voltage, and the remaining lead is for the pulse signal.

Apply the control signals from your generator and be sure the servo doesn't jam. A jamming condition is best determined by measuring the current drawn by the servo. If the current draw exceeds the midrange idle-current at either extreme of the servo's travel, adjust R8 slightly. (Midrange idle-current can be measured when the servo is at any position other than an extreme.) If the servo jams at both travel extremes, adjust R6 to eliminate the problem. If your servo requires negative-going pulses, they can be obtained by adjusting R8.

PARTS LIST

All resistors ¼-watt, 5%, unless otherwise specified
R1, R5, R7, R9, R10—10,000 ohms
R2–18,000 ohms
R3—2200 ohms
R4—100,000 ohms
R6—5000 ohms, trimmer potentiometer
R8—10,000 ohms, trimmer potentiometer
Capacitors
C1—0.1µF
C2—0.05µF
C3—1µF, tantalum
IC1—LM324
D1—1N914
Miscellaneous: perforated construction board, wire, 5-volt power-supply, IC socket, cable and connector for computer's parallel port, servos and linkages, etc.

Servos can be purchased at most "hobby shops" that sell R/C equipment. Check your local Yellow Pages under "Hobby & Model Construction Supplies." They are also available mail order; check the ads in modelling magazines.

Computer control

To control a servo with a home computer, all you need is one line of a parallel port and a program with a timing loop that will provide pulse signals of one to two ms in length that repeat every 20 milliseconds. The pulses will have to be repeated enough times to ensure that the servo has reached the desired position—usually half a second is enough to go from one extreme to the other. Servos are apt to cause power supply noise, so it might be a good idea to add a 0.01-µF capacitor across the servo's power-supply terminals.

Applications

The output wheel on the servo's shaft can be attached directly to a pen or pointer for use in a strip-chart recorder. It can be directly hooked to a robot arm using model-aircraft linkages. For steerable devices, borrow the front-end parts from model-aircraft nosegear. To govern the speed of a lawnmower, hook an arm from the servo shaft directly to the lawnmower engine's throttle plate; that should give you nearly instant control.

R/C servos have dozens of uses, whether or not you use a computer to control them. Give them a try in your next project. **R-E**

"I'd tape toy commercials and play them for Mom and Dad just before my birthday."

12-KEY PUSHBUTTON TONE MODULE

CEX-4000

GENERATES THE 12 STANDARD TELEPHONE TONE DIALING FREQUENCY PAIRS. V+ SHOULD <u>NOT</u> EXCEED 6 VOLTS. REQUIRES 3.58 MHz CRYSTAL. OK TO USE FROM 1 TO 12 KEYS FOR REMOTE CONTROL.

TOUCH-TONE® IS A REGISTERED TRADEMARK OF AT+T.

(FREQUENCIES IN Hz)

1	2	3
699.1 1215.9	699.1 1331.7	699.1 1471.9
4	**5**	**6**
766.2 1215.9	766.2 1331.7	766.2 1471.9
7	**8**	**9**
847.4 1215.9	847.4 1331.7	847.4 1471.9
*****	**0**	**#**
948 1215.9	948 1331.7	948 1471.9

PORTABLE TOUCH-TONE® GENERATOR

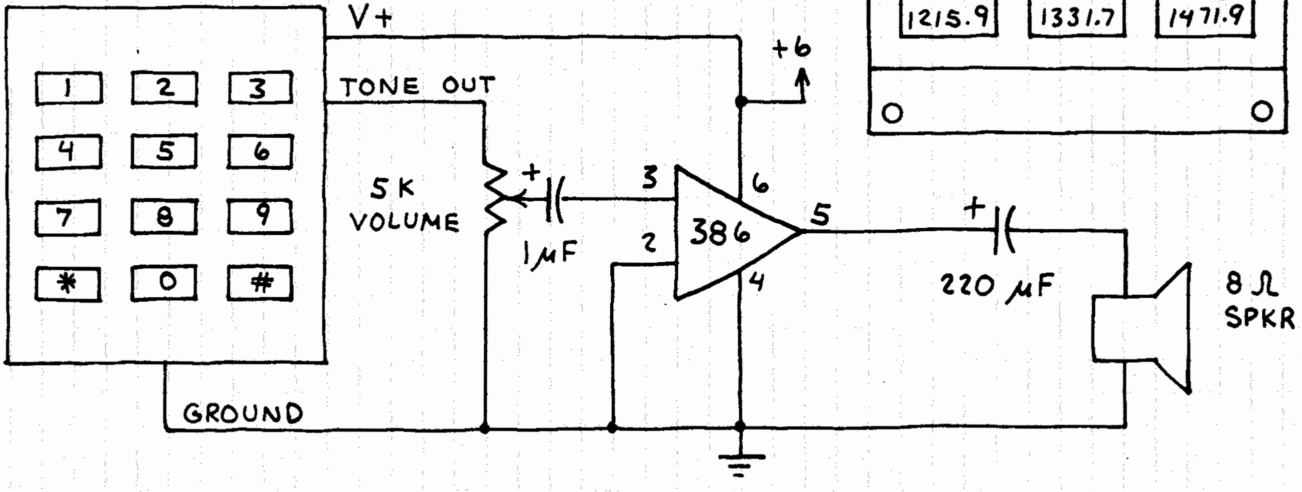

REMOTE CONTROL

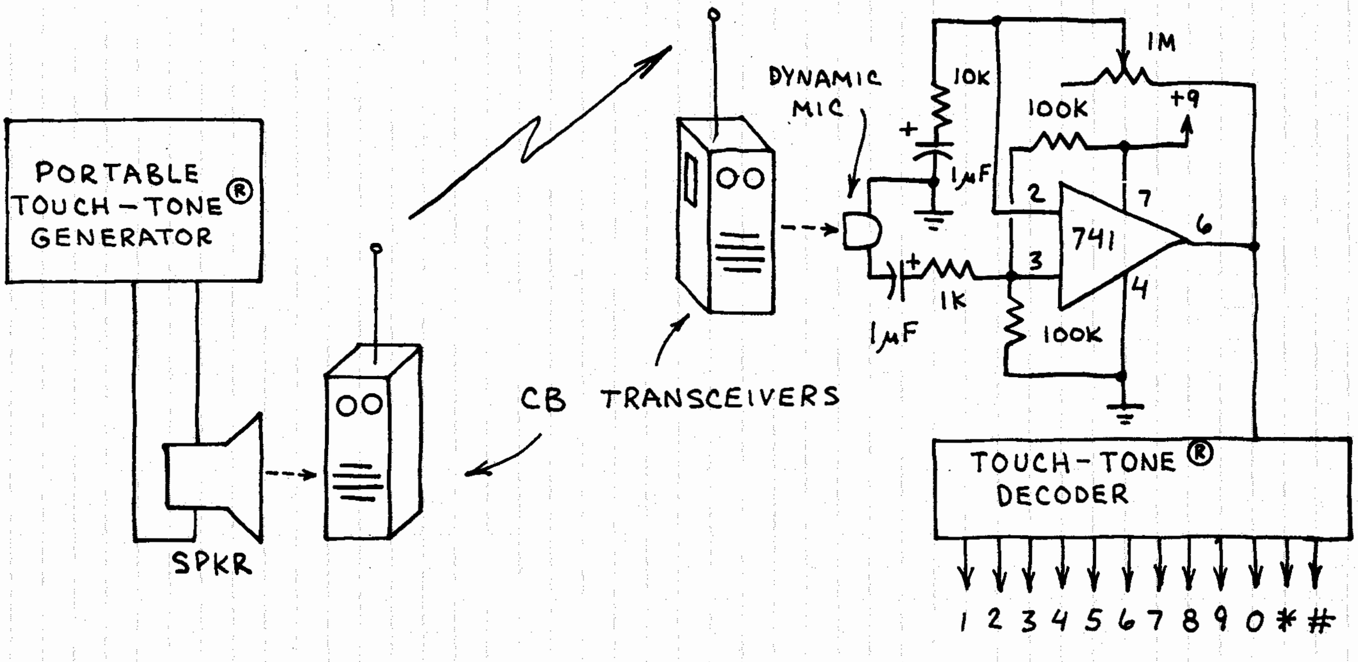

PERSONAL POCKET PAGER

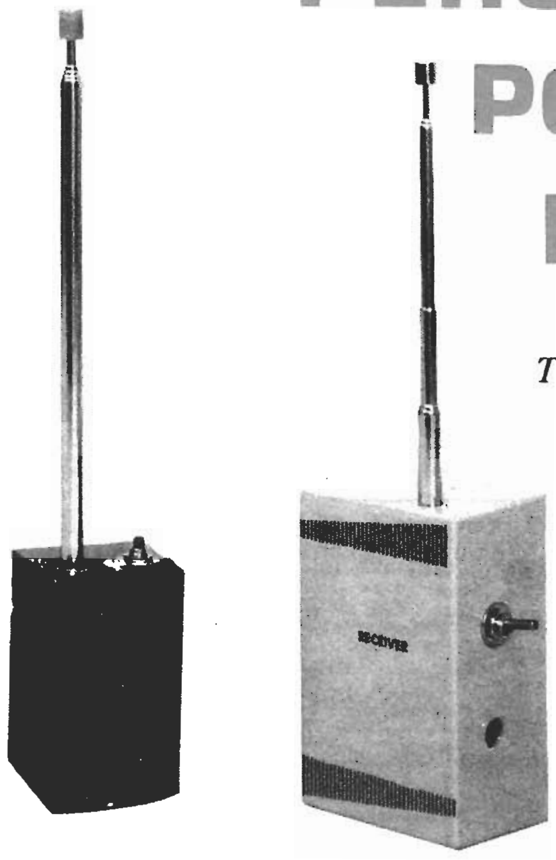

This local-area paging system can help keep you in touch with family, friends, and co-workers.

By Dan Becker

While working outdoors or in your garage, often it would be helpful for those indoors to have a convenient way to alert you if you are needed. Or perhaps your children are playing outdoors and you would like an easy way to call them in. This article describes a wireless transmitter/receiver combination—called the *Personal Pocket Pager*—that allows you to page (beep) someone from a distance of up to about 100 feet.

When activated, the transmitter sends out an amplitude modulated (AM) 49,890-MHz RF carrier. The receiver detects, amplifies, and decodes the RF signal, which, in turn, activates a piezo beeper (buzzer). The receiver is small enough to carry in a pocket or sit on your workbench. The transmitter is also small and fits easily into a pocket for quick access.

The Transmitter. Figure 1 shows a schematic diagram of the transmitter circuit. A 7555 CMOS oscillator/timer, U1, generates a 490-Hz squarewave. Resistors R1–R3, and capacitor C3 determine the squarewave's frequency. Capacitor C2 and L3 prevent RF currents from reaching the trigger input, pin 2 of U1; at the same time, 490-Hz signals pass unattenuated. The 490-Hz output of U1 at pin 3 is used to drive a crystal-oscillator circuit built around Q1, which generates the 49,890-MHz RF-carrier signal.

Capacitor C5 bypasses RF current to ground, placing transistor Q1 in a common-base configuration. Resistors R4–R6 set Q1's quiescent DC emitter current to about 7 milliamperes (mA). Inductor L1 is used to tune capacitors C6, C7, and Q1's collector-base capacitance to a resonant frequency of 49,890 MHz. RF transformer T1 matches the low impedance of the whip antenna to the 780-ohm load resistance required by the oscillator. The antenna-loading coil, L2, tunes out the capacitive reactance exhibited by the electrically short whip antenna changing the antenna into a resistive load. Capacitors C1, C4, and C8 filter the V+ (power supply) bus.

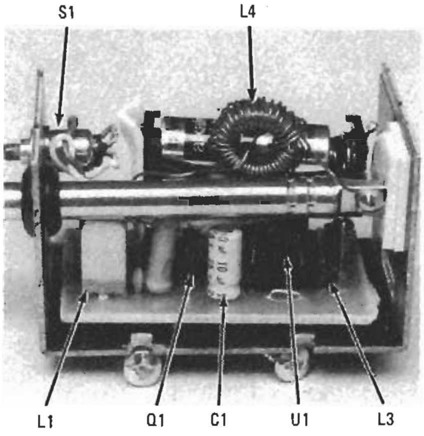

Shown here is the Pocket Pager's completely assembled transmitter, which should give you some idea of its actual size. Because of tight spacing, the resistors have been vertically mounted.

With switch S1 closed, the squarewave signal from U1 periodically grounds the pin 3 end of resistor R6. With R6 grounded, Q1 is supplied a DC current that, in turn, allows Q1 to generate an RF carrier. In that way, U1 switches Q1 on and off at a frequency of 490 Hz to generate an amplitude-modulated RF envelope.

The RF Receiver. Figure 2 shows the schematic diagram of the RF receiver. Transistor Q1 and its components comprise a super-regenerative receiver. Resistors R1–R4 bias Q1 for a quiescent-emitter current of about 1 mA.

The primary and secondary currents of T1 are 180-degrees out of phase, providing positive feedback. Capacitor C6 tunes T1 to resonance at 49,890 MHz. Capacitor C6 and transformer T1 make the circuit into a Hartley RF oscillator. Capacitor C4 is non-critical, but it does improve performance by providing an RF current path around transistor Q1 for the discharge from the T1/C6 tank circuit.

Capacitor C1 couples the antenna to the primary of T1. From there, the received signals are used to drive the base of Q1 through T1's secondary and capacitor C2 (which affects Q1's DC bias rate). Because of that, the circuit oscillates at two frequencies simultaneously: 49,890 MHz, and 450 kHz. During each 49,890-MHz cycle, before RF oscillation begins, Q1 acts like a high gain RF amplifier, greatly magnifying the antenna's signal.

Once amplified, the signal causes an increase in the average DC emitter current of Q1; and that, in turn, increases the voltage drop across resistor R4. So, amplitude variations in the

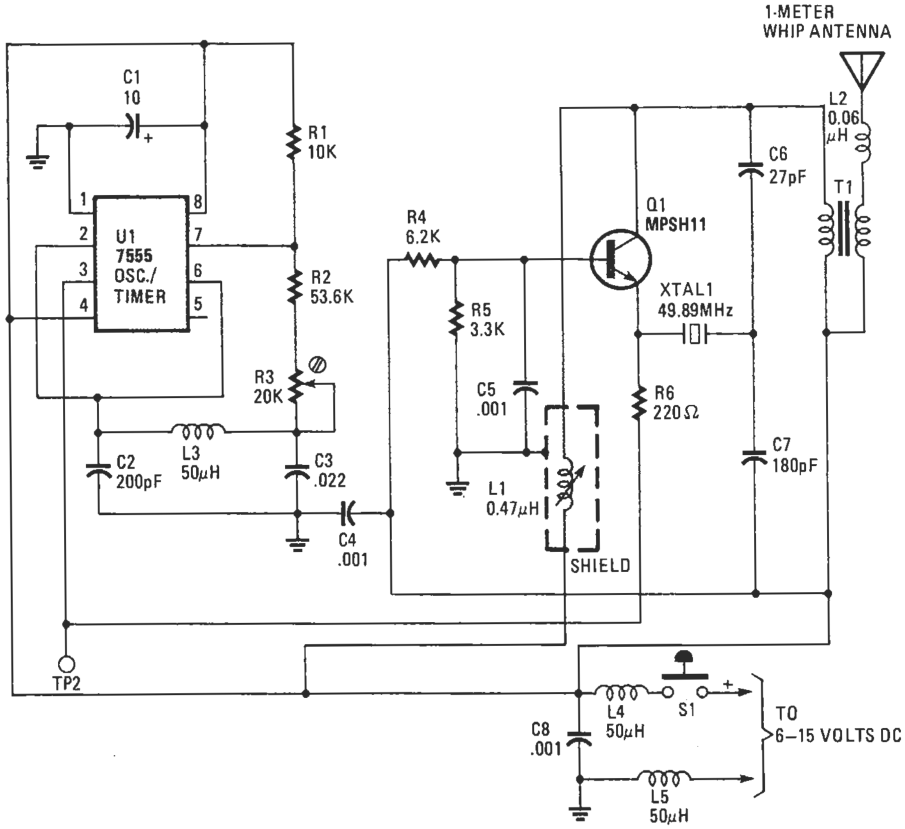

Fig. 1. The transmitter is built around a 7555 CMOS oscillator/timer, U1—whose frequency is dependent upon the values of resistors R1–R3 and capacitor C3—and is designed to generate a 490-Hz squarewave output.

antenna's signal result in voltage variations across R4. Capacitor C7 couples the demodulated RF signal that appears at R4 to op-amp U1.

Op-amp U1-a provides 10 dB of gain to the 490-Hz signal from R4. Op-amp U1-b further amplifies and shapes the 490-Hz signal into squarewave pulses. To do that, resistors R5 and R6 set the voltage gain of U1-a to 40 dB (100 times). Resistors R7–R9, R12, and R13 fix the quiescent DC-output voltage at pins 1 and 7 to 2.5-volts. Resistor R10 allows a test probe to sample the 490-Hz tone at pin 1. A ferrite bead (connected in series with R10 and located at TP1) and C9 block any RF current that may be present. Another ferrite bead (connected across the opposite end of C9) keeps RF current from reaching any test probes connected to circuit ground. Capacitor C10 couples the 490-Hz signal, from pin 7 of U1-b, to pin 3 of U2 (an LM567 PLL tone decoder). Resistor R16 divides pin 7's output voltage, decreasing the transmitter's range, but increasing the receiver's immunity to interference from other transmitters using the 49-MHz band.

Integrated-circuit U2 contains circuits that can be set to detect a specific signal frequency when applied to its input at pin 3. Resistors R17 and R18, and capacitor C14 set the detection frequency to 490 Hz. Capacitors C11 and C12 fix the circuits bandwidth to less than 100 Hz. Pull-up resistor R19 keeps output pin 8 high until a signal is decoded, at which time pin 8 goes low. Upon going low, pin 8 grounds the cathode of LED1 through current-limiting resistor R20, causing it to light.

Capacitor C15 couples a high-to-low trigger pulse from U2 to U3 (a 7555 oscillator timer). After triggering, pin 3 of U3 goes high, turning transistor Q2 on. When Q2 conducts, the negative lead of the piezo buzzer (BZ1) is grounded, causing BZ1 to sound. Resistor R22 and capacitor C16 fix the time interval during which BZ1 sounds to about one second.

Pushbutton S1 allows you to transmit a signal by connecting power to the circuit. A low power voltage regulator, U4, provides a constant 5-volts source, which is used to operate the circuit. Capacitors C3, C8, C13, C17, and C18, and RF choke L3 bypass RF and the 490-Hz signals to ground, filtering the V+ bus.

Construction. Because both units include RF circuitry, printed-circuit boards are recommended. Full-sized templates of the printed-circuit boards for Personal Pocket Pager's transmitter and receiver (respectively) are shown in Figs. 3 and 4. You can etch your own, or you can purchase etched and drilled boards from the source given in the Parts List.

You may want to power the receiver

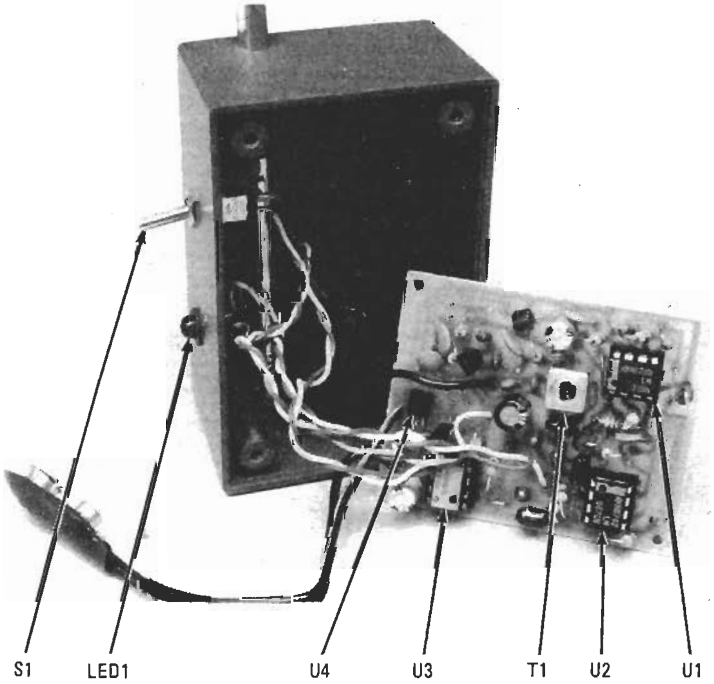

Here is what the receiver's printed-circuit board looks like with all the components installed. The receiver is somewhat larger than it's counterpart, the transmitter. If used as a stationary unit, it can be powered from a wall-mounted power supply, or a home-brew power supply circuit.

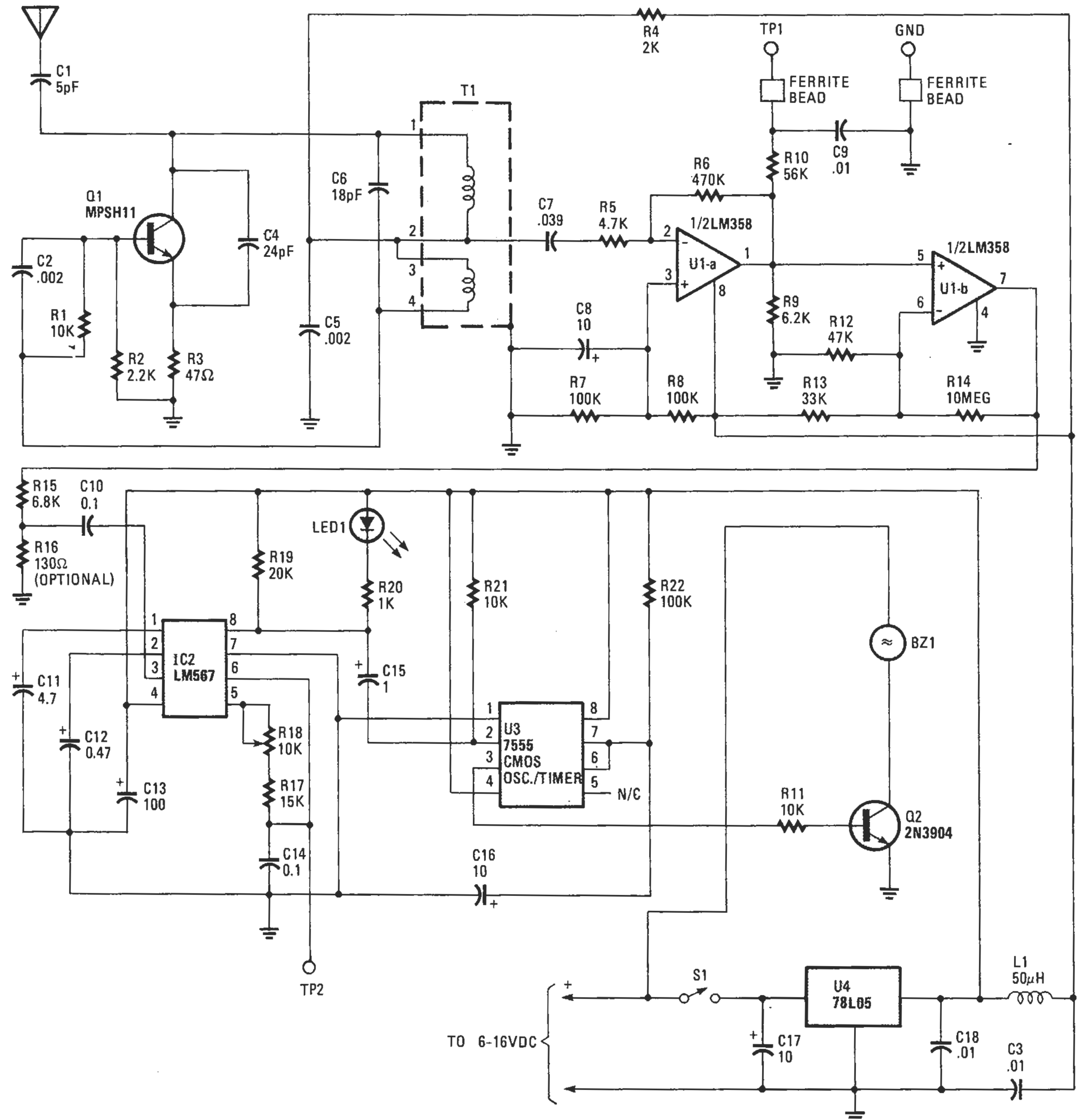

Fig. 2. The RF receiver is built around an LM358 dual op-amp (U1), an LM567 PLL tone decoder (U2), and a 555 oscillator (U3).

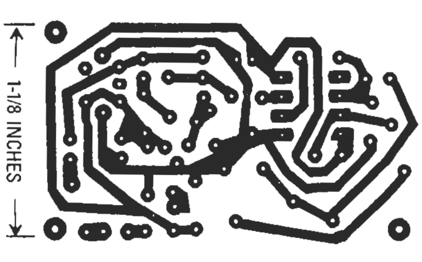

Fig. 3. Shown here is a full-sized template of the transmitter's printed-circuit board.

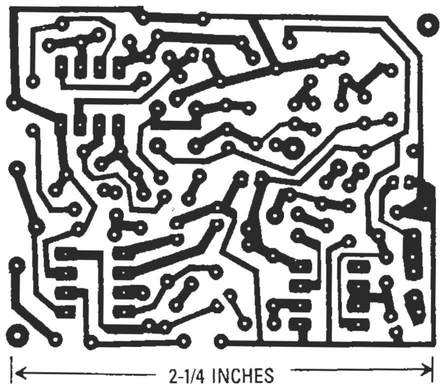

Fig. 4. Here is a full-sized template of the receiver's printed-circuit board.

from an AC-to-DC wall transformer. If so, the receiver will fit into an enclosure about 2½ by 3 inches. Alternatively, make the receiver portable by selecting an enclosure that is large enough to hold a battery—almost any rechargeable battery, in the 6- to 12-volt range, works fine. Before assembling, use the receiver's printed-circuit board as a template to mark mounting holes in the enclosure. Drill the holes, using a ³⁄₃₂-inch bit, for the mounting hardware. In addition, drill a hole for the antenna, a ⅛-inch hole for the wire from the wall transformer (if applicable), and mounting holes for the piezo buzzer, on-off switch S1, and LED1.

For the transmitter, select an enclosure with enough room for the printed-circuit board, a whip antenna, and a 9-volt battery. Before assembling the circuit board, use it as a template to mark the enclosure for mounting holes. Drill the mounting holes with a 3⁄32-inch bit. Finally, drill appropriately sized mounting holes for pushbutton-switch S1, and a hole for the whip antenna.

Following Figs. 5 and 6, assemble the transmitter and the receiver (respectively) printed-circuit boards. Observe the proper polarity of the electrolytic capacitors, the IC's, and the diodes.

Mount the capacitors and resistors. The capacitors are mount flush against the board to minimize lead lengths; that's especially important in the RF and tone decoder circuits. Note that all resistors vertically mounted.

Don't forget the test points. Figure 7 shows the construction of the test point terminals. Test point TP1 on the transmitter board (see Fig. 5 for its location, and Fig. 7A for construction details) is made by bending a ¼ inch, 180-degree loop in one lead of resistor R6. Install and solder the resistor onto the printed-circuit board so that the loop is accessible with a test probe.

Similarly make two test points on receiver's printed-circuit board (see Fig. 6 for their locations). Test point TP1 (see Fig. 7B) is made by inserting a ferrite bead over one lead of resistor R10. Make a ring in the lead so that the bead stays in place, and then solder the lead to the board. Install a second ferrite bead over a ½-inch length of hookup wire to form TP2. Bend the end of the lead into a ring to secure the ferrite bead in place, and connected the other end (with the ferrite bead installed) on the printed-circuit board.

PARTS LIST FOR THE RF TRANSMITTER

SEMICONDUCTORS

U1—7555, CMOS oscillator/timer integrated circuit
Q1—MPSH11, ECG229, TCG229, or SK3246/229, NPN RF transistor

RESISTORS

(All resistors are ¼-watt, 5%, unless otherwise noted.)
R1—10,000-ohm
R2—53,600-ohm, 1%
R3—20,000-ohm, trimmer potentiometer
R4—6200-ohm
R5—3300-ohm
R6—220-ohm

CAPACITORS

(All capacitors must be rated at for least 16 WVDC.)
C1—10-µF, electrolytic
C2—200-pF, ceramic disc
C3—0.022-µF, metalized film
C4, C5, C8—0.001-µF, ceramic disc
C6—27-pF, ceramic disc
C7—180-pF, ceramic disc

INDUCTORS

L1—0.47-µH, RF inductor, TOKOI 7KSM series
L2—0.6-µH, antenna loading coil
L3–L5—50-µH, miniature RF choke
T1—RF transformer (see below)

ADDITIONAL PARTS AND COMPONENTS

S1—Single-pole single-throw, momentary contact pushbutton switch
XTAL1—49.890-MHz series resonant crystal
Printed-circuit board, antenna (one-meter whip or, a one-meter length of #22 hookup wire), enclosure, 8-pin DIP socket, wire, solder, etc.

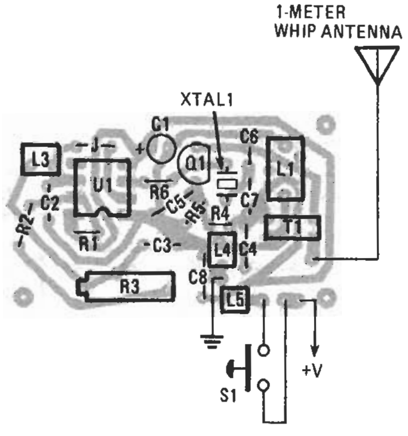

Fig. 5. Following this layout diagram, assemble the transmitter, being mindful that the resistors are vertically mounted on the board due to tight spacing.

On the transmitter circuit, solder one lead of the antenna loading coil, L2, to the printed-circuit board, and attach the other lead to the base of the whip antenna.

Tuning. The following alignment procedure uses a frequency counter and an amplifier/speaker with an auxiliary- or microphone-input jack. All test points are referenced to the circuit-board ground.

Temporarily, remove U2 (receiver) from its socket. Apply power to the transmitter and receiver circuits. Adjust trimmer potentiometer R18 for 490 Hz while measuring the frequency at TP2 (receiver). Similarly, adjust R3 for 490 Hz while measuring the frequency at TP1 (transmitter). Remove the frequency counter and attach an audio amplifier/speaker to TP1 (receiver).

Using a small screwdriver, adjust the core of T1 (receiver), and the core of L1 (transmitter) until the top of each core is even with the top of its housing. A rushing noise, and possibly the 490-Hz tone, should be heard. Alternately, adjust L1 and T1 for the strongest reception of the 490-Hz tone. Next, place the transmitter at the fringe of its range and tune T1 (receiver) for the best reception. Disconnect all test equipment and power, and reinsert U2.

A second harmonic of the transmitter's signal may be detected on an FM receiver tuned to about 100 MHz. If so, minimize that signal by carefully adjusting L1.

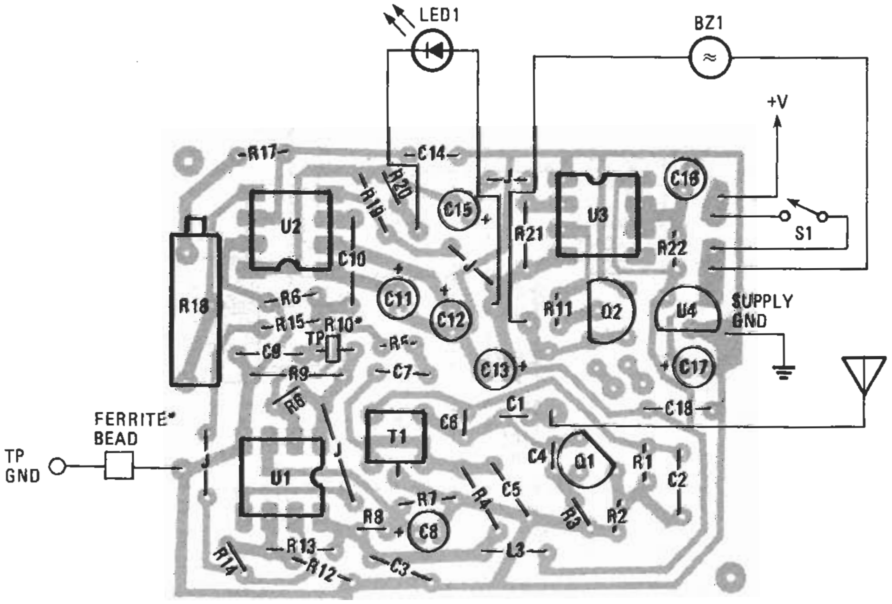

*SEE TEXT

Fig. 6. Assemble the receiver printed-circuit board, using this layout diagram as a guide. Note the locations of the two ferrite beads, and be sure not to leave them out.

PARTS LIST FOR THE RF RECEIVER/ALERT BEEPER

SEMICONDUCTORS

U1—LM358 dual op-amp integrated circuit
U2—LM567 tone decoder, integrated circuit
U3—7555 CMOS oscillator/timer integrated circuit
U4—78L05 low power +5-volt regulator, integrated circuit
Q1—MPSH11, ECG229, TCG229, or SK3246/229, NPN RF silicon transistor
Q2—2N3904 general-purpose NPN silicon transistor
LED1—Light-emitting diode (any color)

RESISTORS

(All resistors are ¼-watt, 5%, units unless otherwise noted.)
R1, R11, R21—10,000-ohm
R2—2200-ohm
R3—47-ohm
R4—2000-ohm
R5—4700-ohm
R6—470,000-ohm
R7, R8, R22—100,000-ohm
R9—6200-ohm
R10—56,000-ohm
R12—47,000-ohm
R13—33,000-ohm
R14—20 megohms
R15—6800-ohm
R16—1300-ohm
R17—15,000-ohm
R18—10,000 ohm, 20-turn, trimmer potentiometer
R19—20,000-ohm
R20—1000-ohm

CAPACITORS

C1—5-pF, ceramic disc
C2, C5—0.002-μF, ceramic disc
C4—24-pF, ceramic disc
C6—18-pF, ceramic disc
C7—0.039-μF, metallized film
C8, C16, C17—10-μF, electrolytic
C3, C9, C18—0.01-μF, ceramic disc
C10, C14—0.1-μF, metallized film
C11—4.7-μF, electrolytic
C12—0.47-μF, electrolytic
C13—100-μF, electrolytic
C15—1.0-μF, electrolytic

ADDITIONAL PARTS AND COMPONENTS

L1—50-μH, RF choke
T1—RF transformer
S1—Single-pole, single-throw toggle switch
Printed-circuit board (see below) or perfboard, VHF ferrite beads, antenna (two feet of #22 hookup wire), 8-pin DIP sockets, plastic enclosure, piezo buzzer, hookup wire, solder; hardware, etc.

ORDERING INFORMATION

Note: The following components for the project are available from Time Space Scientific, 101 Highland Dr., Chapel Hill, NC 27514:

TRANSMITTER

TS3 printed-circuit board, $9.95; TR6-1 inductor kit includes T1 and L1–L5 only, $10.95; complete transmitter kit TR6-2 (including all semiconductors, resistors, capacitors, one DIP socket, $26.95. Antenna, switch, and enclosure not included.

RECIEVER COMPONENTS

TS3310, transformer T1, $7.95; TS2 printed-circuit board, $8.95; complete receiver kit RC2-1 (including all semiconductors, resistors, capacitors, ferrite beads, L1, T1, antenna wire, and DIP sockets) is available for $27.95. Enclosure and battery not included.

Add $4.50 for shipping and handling (a one time charge covering all items ordered). NC residents must add sales tax. For technical information write to Time Space Scientific at the above address, and include a self addressed stamped envelope.

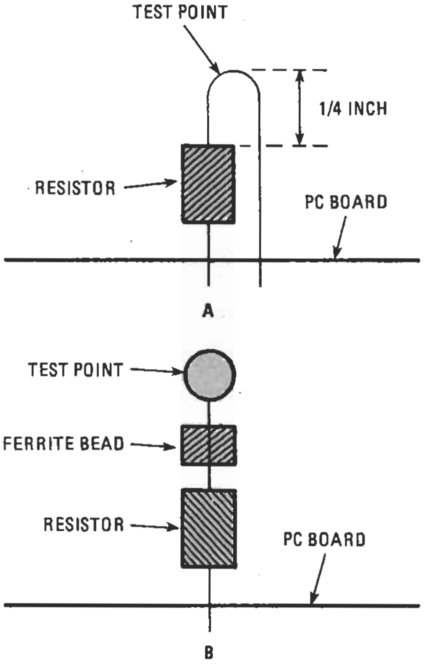

Fig. 7. Shown here are construction details of the test point terminals.

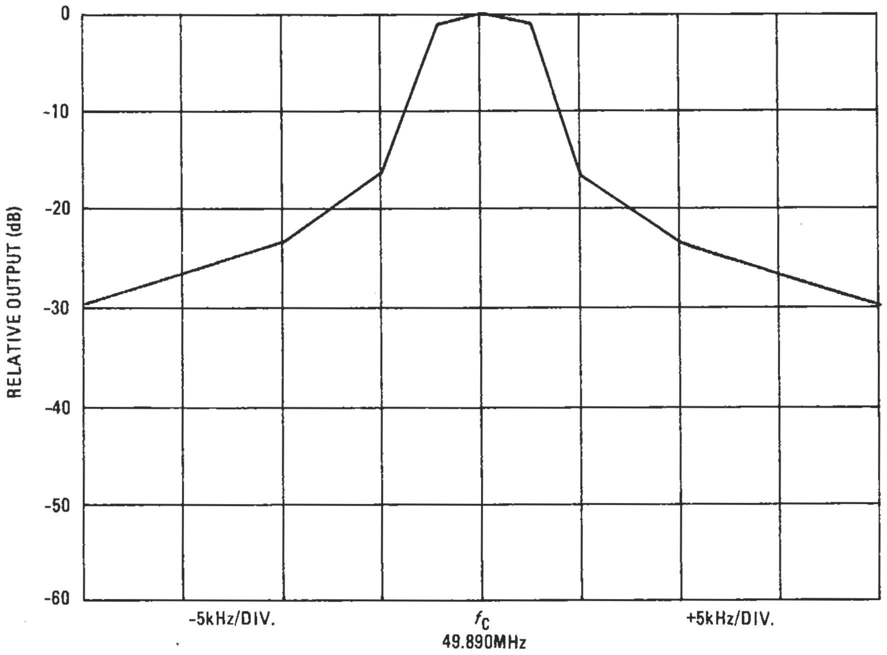

Fig. 8. This diagram illustrates the RF of the transmitter, as seen on a spectrum analyzer. As Required by FCC regulations, Part 15, the bandwidth is less than +/–10 kHz.

FCC Rules. The Personal Pocket Pager is designed to comply with part 15 of the FCC rules and regulations. It can be built without having to obtain special permission from the Federal Communications Commission. However, it is recommended that you read part 15, sections 15.133, 15.118 and 15.119 of the Federal rules and regulations which are available at most libraries.

Figure 8 shows the signal of the RF transmitter, as seen on a spectrum analyzer. As required by FCC regulations, Part 15, the bandwidth is less than ±10 kHz. ■

COMMUNICATIONS

HOW RADIO-CONTROL SYSTEMS WORK

TYPES OF REMOTE R/C SYSTEMS USED TO OPERATE MODEL PLANES, CARS, AND BOATS

BY FRED MARKS

A GROWING number of hobbyists has been attracted to radio-control modeling due to new solid-state designs and exam-free CB licensing. The electronic gear in today's modeling provides wide response flexibility and high reliability in extremely compact, lightweight packages. (See also "Radio Control For Hobbyists," February 1974.)

There are two commonly used basic schemes in R/C equipment. The simplest is a refined version of single-channel, pulse-proportional control. The other, a digital system, is a sophisticated feedback proportional control that utilizes pulse-position modulation.

Pulse-Proportional Systems. The only tone-modulated, pulse-proportional system we know of on the market today is made by Ace R/C. Its major advantages are minimal weight and low cost. It is used primarily in situations where multi-channel flexibility is not required.

In the Ace R/C system, a 600-Hz tone is pulsed on and off at the transmitter to drive an actuator in the receiver. The receiver demodulates the received pulsed tone and produces a square-wave output that reproduces the pulses originally sent to the transmitter's tone modulator.

The switching outputs of the receiver connect one end of the actuator or the other (depending on the command initiated at the transmitter) to the positive voltage supply. This type of system is limited to one proportional function. The repetition rate is from 6 to 8 pulses per second. The model under control does not respond to individual pulses. Instead, it follows the average position.

Digital-Proportional Systems. Digital systems all use the same pulse-position modulation scheme, with the r-f envelope amplitude-modulated by a series of pulses at a specific interval (frame length) of from 10 to 15 milliseconds. Each pulse is separated from the others by a nominal 1.5 milliseconds. This separation is independently and continuously variable by ±0.5 millisecond (maximum) for control. The decoded output to a digital feedback servo is a pulse that duplicates the original control input to an accuracy of 99.75 percent.

The block diagram of a typical digital-proportional transmit/receive system is shown in Fig. 1. The wavetrain illustrated is for a five-channel system.

The objective of digital encoding and decoding is to obtain a specific width-control pulse for each servo in the system. The length of the pulse must be variable over the desired control range. Timing and syn-

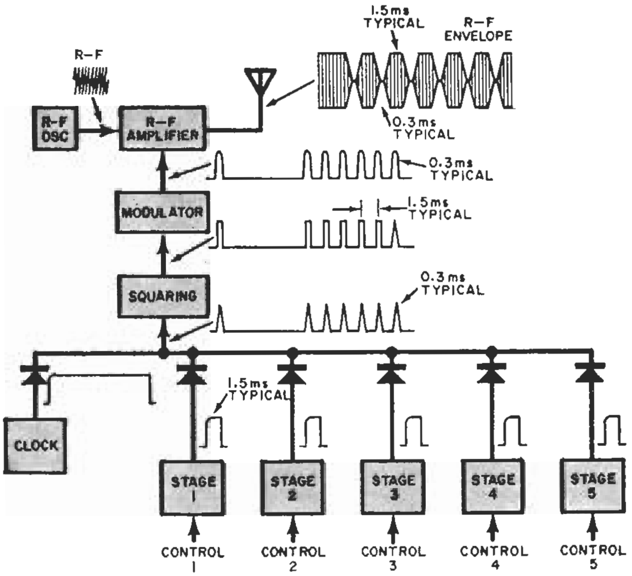

TRANSMITTER/ENCODER
(A)

Fig. 1. Block diagram of contemporary five-channel digital-proportional transmit and receive system is complete as shown except for servos. The decoder system, shown on facing page, uses typical IC's.

chronization of the scheme is shown in Fig. 2. The times indicated are approximate and are representative of those used in current systems.

A typical encode decode process takes place as follows. The clock oscillator in Fig. 1A establishes the repetition rate of the system, which is usually 10 to 16 milliseconds or 60 to 100 Hz. The trailing edge of the frame pulse triggers the first stage. Upon being triggered, the first stage changes state for a period of time determined by the control potentiometer.

The output of each stage is gated by a diode to an RC differentiator, and a small spike at the input to the squaring block occurs at the trailing edge of the stage's output pulse. This spike is also coupled to the next stage for triggering. Stage two stays on for its commanded period (t2 in Fig. 2). Stages three through five follow in like manner. Then 3 to 8 milliseconds are permitted to elapse to allow the decoder to reset. The clock, having completed its 15-millisecond period, changes state to restart the cycle.

The gated output spikes appear at the input to the squaring amplifier in the first frame of pulses. The squaring stage converts each spike to a well-defined pulse with a 0.3-millisecond nominal width for control of the modulator.

The position of each pulse relative to the preceding pulse is the transmitted information—hence, pulse-position modulation. The rise and fall times of the pulsed r-f envelope must be carefully controlled to obtain an acceptable sideband spectrum.

The receiver attempts to reproduce the encoded envelope with the best possible fidelity for presentation to the decoder.

Digital-Decoder. The decoder, shown in block diagram form in Fig. 1B and schematically in Fig 3, is typical of modern IC decoders. The output of the receiver is a train of two (for one channel) to nine (for eight channels) pulses per frame. The inverters switch between a 4.8-volt high level to almost zero for the low level. Transistor *Q1* serves primarily as an inverter for the incoming signal, although it also provides a slight amount of amplification.

The pulse train that comes off the collector of *Q1* proceeds to two stages. The stage consisting of inverters 4 and 5 generates the "set" pulse, while the one made up of inverters 2 and 3 shapes the pulse train to form the clock or "shift" pulses.

The shift-pulse shaper accepts the pulse train, squares it, and slightly stretches it by feedback through *C3*. The low output from inverter 2 is shifted high by inverter 6 to provide the proper output. The shaped

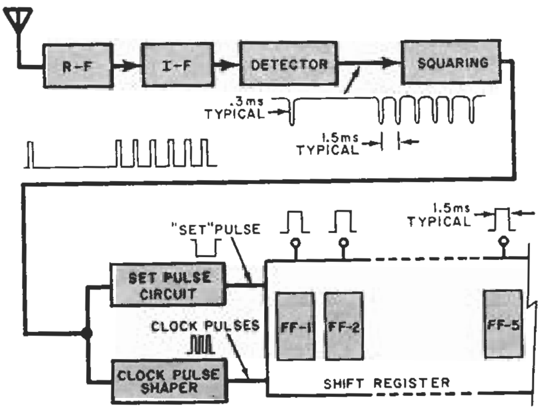

RECEIVER/DECODER
(B)

clock pulses are then passed to an eight-bit shift register.

Upon receipt of the sync pulse, the diode and *C4* act as a "sample-and-hold" circuit or pulse stretcher. Discharging through inverter 4, *C4* places the inverter in a high state. At this point, the pulse is stretched across the entire pulse train. The output from inverter 5 is square and low during the period when the pulse train is present.

The shift register is set by having the output of the inverter high at the instant the first clock pulse is received. The set is immediately driven low until after the last pulse is received. Flip-flop *FF1* in the register is inhibited from shifting to high at its Q output until the next frame of information is received. (see Fig. 1B).

The two control functions are entered at the set (S) input of *FF1* and at the clock inputs. When there is no information present during the sync (set) pause period, the *FF1* through *FF8* Q outputs are low. As soon as the first clock pulse is received, *FF1*'s Q output goes high. Unless it "sees" a high input at SA and SB, which it does at the instant the first clock pulse is received, *FF1* (at its Q output) cannot shift. It remains high until the second clock pulse is received, at which time it goes low.

If the S input of *FF1* were to remain high at all times, *FF1* would simply shift high alternately at its Q and not-Q outputs every time a clock pulse is received. Now, *FF1* cannot shift again as long as the output of inverter 5 is low. This is why the pause between frames is called the sync or "set" pause.

Bear in mind that the Q output of *FF2* cannot shift high until the S input is high. It sees a high level only when the Q output of *FF1* is high. As soon as *FF1*'s Q output is driven high, *FF2* is set to shift high at its Q output when the second pulse, which

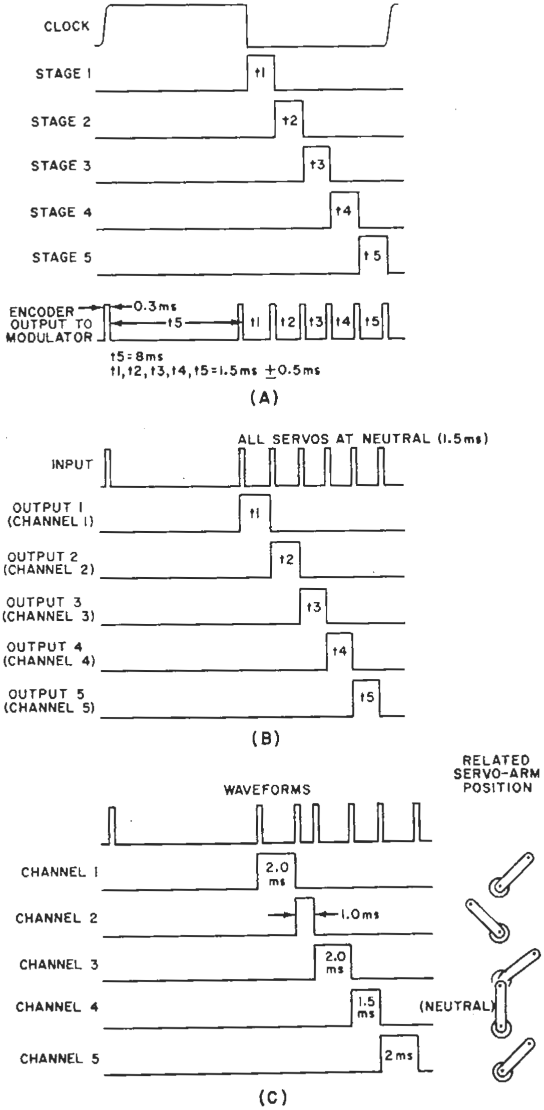

Fig. 2. Waveforms show timing and synchronization of digital signals. Those at (A) are for one frame of encoder; (B) is for decoder; and (C) shows control variations.

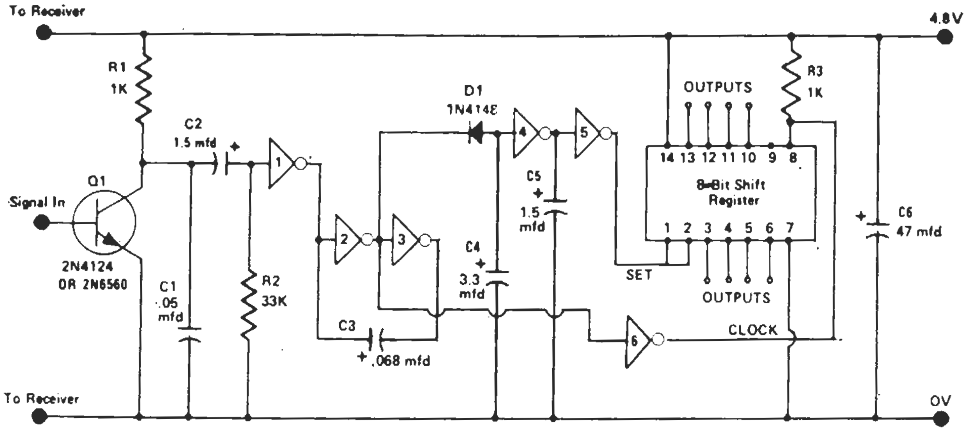

Fig. 3. Schematic diagram of the decoder shows how the 8-bit shift register in IC is used to simplify the circuit. Transistor Q1 is inverter and amplifier for input.

sets the Q output of *FF1* to low, is received. The Q output of *FF2* remains high until the third pulse is received to drive it low and the Q output of *FF3* high, and so on down the line through *FF5*. As soon as *C5* and *C6* have discharged after the last pulse, the output of inverter 5 returns to high, setting *FF1* for the next frame.

The Servo. Figure 4 is a block diagram of a digital feedback servo. Almost all servo amplifiers now consist of a specially designed IC that contains all the control functions shown in the diagram. The only external components needed are used for dead-band, travel, and feedback sensitivity trimming. The servo functions as follows.

First, a reference pulse is generated, its width determined by the feedback element as positioned by the servo output arm. The incoming signal may be wider or narrower than the reference pulse. The comparator, usually a diode-resistor network, determines the relative width of the pulses (see Fig. 5).

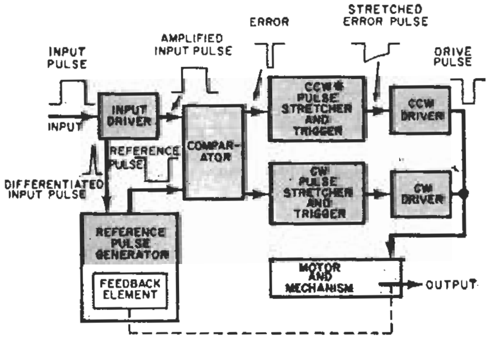

*COUNTERCLOCKWISE AND CLOCKWISE

Fig. 4. Most of the functions in digital servo are included in a single IC device.

The pulse stretcher and trigger convert the error pulse, measured in microseconds, to a longer pulse suitable for turning on the servo driver. The driver then applies B+ power to the servo motor, providing *full* power at any position.

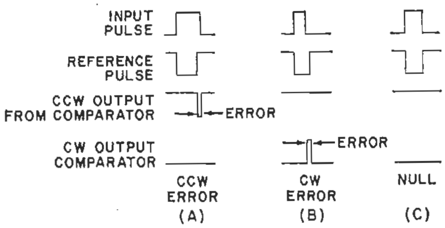

Fig. 5. Diode-resistor comparator determines relative width of pulses in digital servo.

As the motor and servo arm are driven, the feedback element is repositioning to yield a pulse that is exactly equal in width to the input pulse. The repositioning can take several frames to occur because full servo travel requires 0.5 to 1.0 second, depending on such factors as gearing and battery voltage.

Summing Up. Radio control for modeling has come a long way since the 1950's. With today's equipment, containing the sophisticated electronics described here, the modeler has at his command a control system that responds in a manner very similar to the systems used in full-size aircraft, racing and standard cars, and boats. ◆

Radio control tone decoder

Logic circuitry replaces resonant reeds

by C. Attenborough

The unit to be described is a tone decoder suitable for use in multi-channel radio-controlled models. It performs the function of the resonant reeds commonly used to detect which modulation frequency is being transmitted, but has the advantage that the range of audio input frequencies can exceed an octave. This cannot be done with reeds because the reed, resonant at *f*, will also be activated by the second harmonic of *f*/2, giving ambiguous outputs. The decoder is also unusual in possessing an ideal band-pass-filter characteristic (steep sides, flat top), an improvement on resonant reeds, which have the characteristic of a high-*Q* tuned circuit. The new decoder, therefore, does not demand such great accuracy of the transmitter modulation frequency.

The basic element of the decoder has the characteristic shown in Fig.1, which will be referred to as a digital high-pass characteristic. Such a characteristic, when passed through an inverter, gives a digital low-pass characteristic. It will be shown later how several basic elements with different critical frequencies, plus some simple gating circuitry, can give digital band-pass characteristics.

Fig.2 shows the circuit of the basic element. R_x and C_x determine the critical frequency (150kΩ and 0.015μF give a critical frequency of 900Hz). If, during one cycle of the input, C_x charges enough for the output voltage of the buffer emitter follower to exceed the upper trigger voltage of the Schmitt, *S*, then the output of the Schmitt goes to logic "0". If one input period is not long enough for this to occur, then the Schmitt output remains at logic "1". At the output of the Schmitt, therefore, there is a pulse waveform when the input frequency is below the critical value, and a logic "1" when it is above the critical value as shown in Fig.3. To give a continuous logic "0" below the critical frequency and logic "1" above it, the *D*-type edge-triggered flip-flop B_2 is used, its *D* input being connected to the output of *S*. The flip-flop is clocked by a positive-going edge which occurs at the end of the time during which C_x is charging. The *Q* output assumes the state the *D* input was in before the clocking edge. It is this property of the flip-flop which enables it to deliver a static output even when the *D* input is a pulse train.

The signals to discharge C_x and to clock B_2 are provided by B_1 which divides the

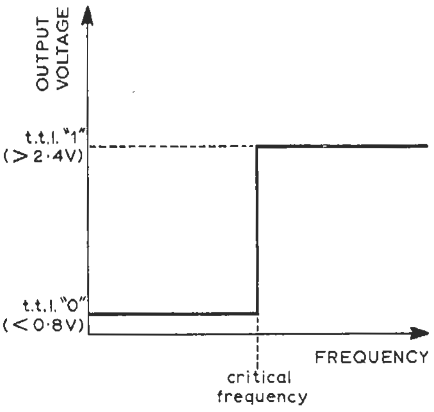

Fig.1. Frequency characteristic of basic element.

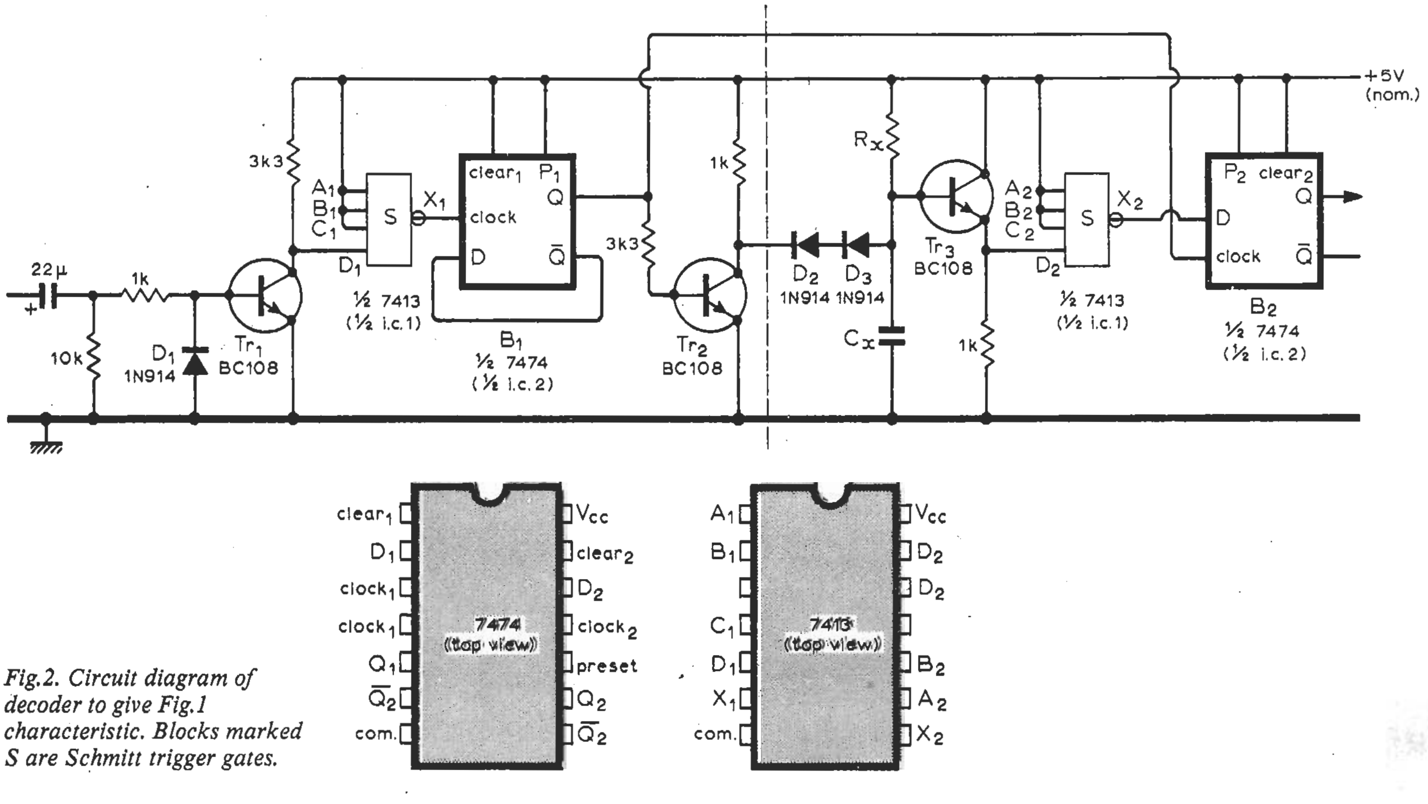

Fig.2. Circuit diagram of decoder to give Fig.1 characteristic. Blocks marked S are Schmitt trigger gates.

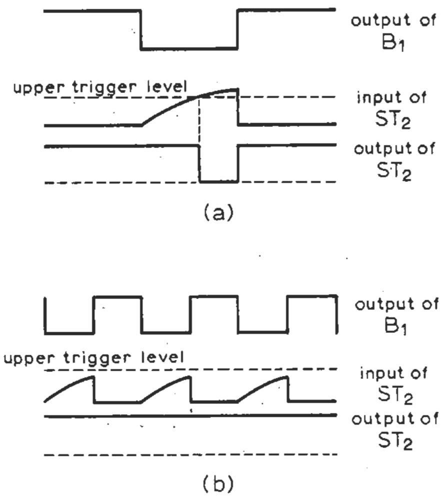

Fig.3. Waveforms produced at output of Fig.3 when input frequency is less than (a) and greater than (b) the critical frequency. The output of ST_2 is marked X_2 in Fig.2.

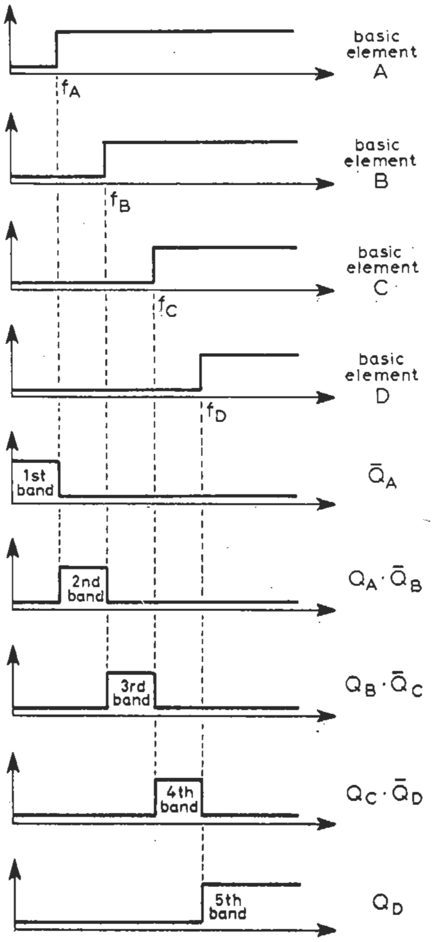

Fig.4. The derivation of four pass-bands from four basic elements.

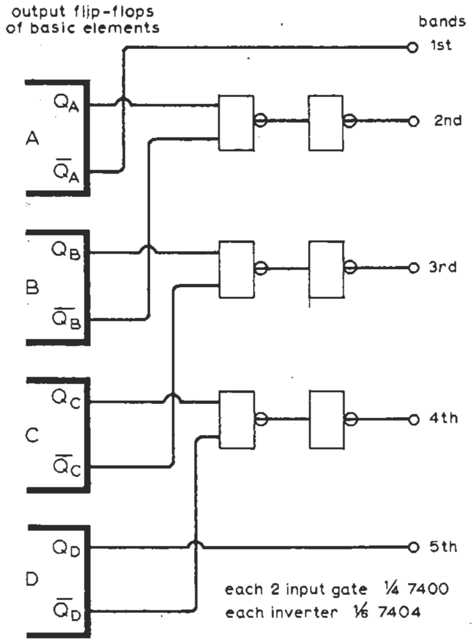

Fig.5. Logic to perform the function of Fig.4.

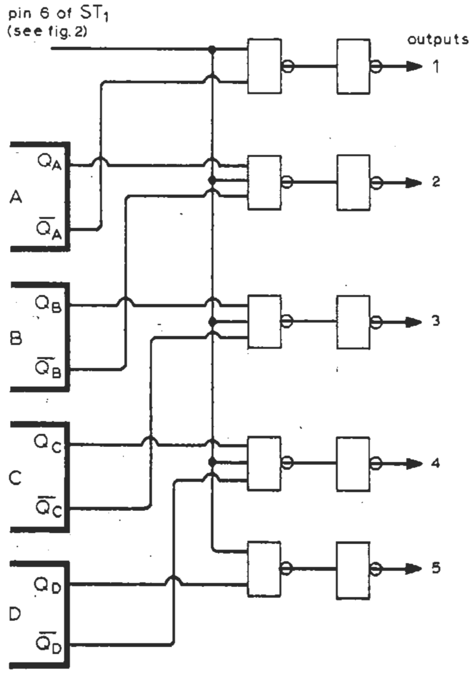

Fig.7. Time-division multiplexing.

Fig.6. Circuit to constrain all flip-flop Q outputs to "0" in the absence of an input signal.

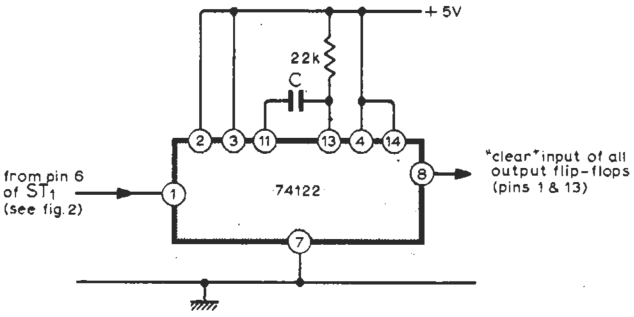

input frequency by two and thus removes mark/space ratio variations. If this were not done, the C_x charging time would be affected, not only by the frequency of the input, but by mark/space ratio variations. Tr_2 discharges C_x via D_2 and D_3 when the B_1 Q output is at logic "1". D_1 and D_2 reduce the dependence of the critical frequency on the supply voltage to about 1% for a change from 4 to 5 volts. Tr_1 and S generate fast rise-time t.t.l. level pulses from the input signal to trigger B_1.

To obtain n non-overlapping band-pass characteristics, we need $n-1$ basic elements with different critical frequencies. (The components to the left of the broken line in Fig.2 may be common to all the basic elements.) Fig.4 shows the characteristics of four basic elements with different critical frequencies, the five distinct bands with these critical frequencies as their edges, and the logic equations for these bands. Fig.5 shows these expressions implemented with NAND logic.

Transmitter battery power may be conserved by not transmitting when all controls are in a neutral position. This means that the lowest frequency band (the first band in Fig.4) cannot be used. Because we cannot know which state B_1 will settle in when the input signal is removed, some way of defining the state of the output bistables is necessary. Fig.6 shows a circuit which will ensure that all the output bistables' Q outputs go to a logic "0" when the input signal is removed. The period of the retriggerable 74122 monostable must be greater than the period of the lowest input frequency; if this condition applies, then because it is retriggerable, the monostable's output will be at logic "1" while an input is present. When the input signal to the decoder is removed, the monostable's output will assume the logic "0" state; because it is connected to the CLEAR inputs of all the output bistables, all the output Q terminals will be forced to logic "0".

It has already been stated that B_1 makes the decoder independent of mark/space ratio variations of the input signal. It follows that mark/space modulation of the transmitter modulating signal may be used to provide proportional control channels in addition to multiple on/off channels provided by the tone decoder itself. It has been suggested that time-division multiplexing of the modulating signal is feasible with the new decoder. If signals in bands 1, 2, 3, 4 and 5 are applied to the transmitter modulator in sequence, then (see Fig.4) at the decoder outputs, 1, 2, 3, 4 and 5 will go to logic "1" and return to logic "0" in succession. A modified form of output gating, shown in Fig.7, routes a decoder input signal in band 1 out of output 1, a signal in band 2 out of output 2, and so on. Since the inputs may be modulated in mark/space ratio or (within any one band) in frequency, it seems that multiple channel proportional control should be possible with a time division multiplexed modulating signal: this presumes, however, some method of holding analogue data in each channel, while other channels are being addressed.