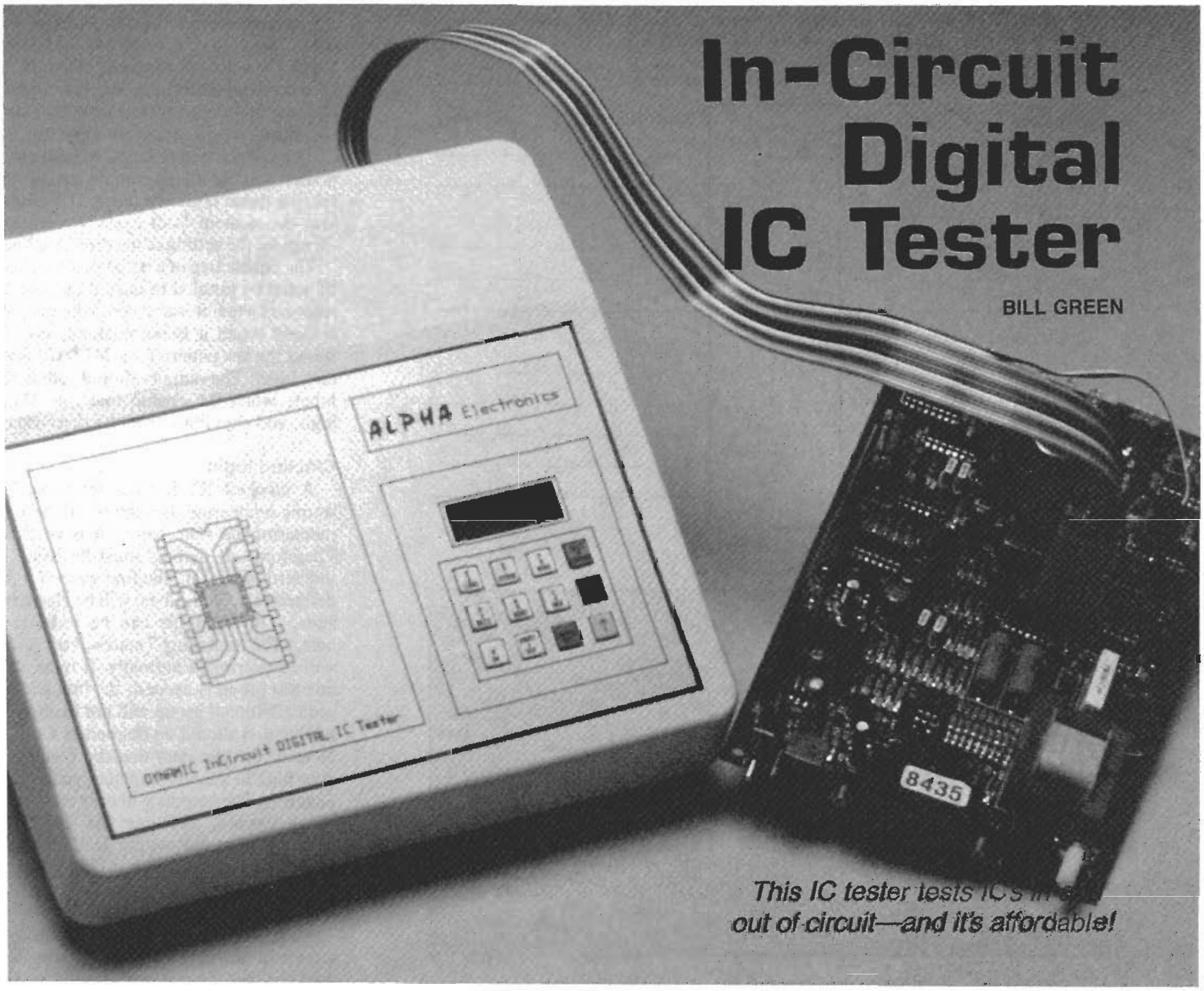

# In-Circuit Digital IC Tester

BILL GREEN

*This IC tester tests IC's in and out of circuit—and it's affordable!*

**Part 2** LAST MONTH WE BUILT the tester and discussed basic test methodology. Now we'll go on and provide specific examples showing how to set up your own test routines on paper and by computer, and how to send those files to and from your desktop computer.

Before we get started, lets correct a few errors from last month. The schematic of the driver board incorrectly identified P2 and P4. Also, the ordering information should have noted that IC16 and IC17 are not included in the partial kit.

### 7404 test data

Here is how to generate test data. This procedure applies whether data is entered via external computer using the data-entry routine discussed later, or is entered via the tester's keyboard.

Our first example illustrates the process for a 7404 hex inverter. First, obtain the pin numbers for inputs, outputs, $V_{CC}$, and ground, and the functional description (or truth table) from the device's data sheet.

To ease the process of generating the test data, make a copy of the template shown in Fig. 7; then fill in the blanks for the part number, number of pins, and group number. You must make a template for each test group if you need more than one. You may also sketch the part's logic diagram in the box on the template.

Next fill in the data blanks, leaving room to write eight binary digits at each pin that must be tested. If we put a 1 into an inverter, we should get a 0 out of it. So put a 1 in the blank for pin 1, and a 0 by pin 2. Repeat the procedure with the remaining five inverters. Then put an X at pins 7 and 14 to indicate that they will be ignored. Now we have all data for the first test cycle.

There is a total of eight test cycles, so now place a 0 at each input and a 1 at each output. (The X's should remain by pins 7 and 14.) That accounts for two of the eight bits in this test group's byte, so duplicate the bit pairs four times. Then convert the eight-bit data, four bits at a time, to two hexadecimal digits using the binary/hexadecimal chart at the bottom of the template. The completed test form is shown in Fig. 8.

The test information, along with the part number and the number of pins, is then stored in the tester's memory using the procedure outlined last time. There is no need for more than one test group to test a 7404 completely.

### In-circuit example

The data for an in-circuit IC depends on how the IC is connected. For example, input pins may be tied to $V_{CC}$ or to ground, so we tell the tester to ignore those pins. Or, if the IC's input is connected to one of its outputs, ignore the input, because its data will be supplied by the output it's connected to. A sample chart is shown in Fig. 9.

**TEST ROUTINE TEMPLATE**

PART NUMBER (8 Alphanumeric Digits Maximum: ____________
NUMBER OF PINS (2 Digits Maximum, Even Numbers 4 to 24): ____________
GROUP NUMBER (1 to 5): ________
REMARKS: ____________

| Binary Data | | Hex | Funct | Pin# | Pin# | Binary Data | | Hex | Funct |
|---|---|---|---|---|---|---|---|---|---|
| | = | | | | | | = | | |
| | = | | | | | | = | | |
| | = | | | | | | = | | |
| | = | | | | | | = | | |
| | = | | | | | | = | | |
| | = | | | | | | = | | |
| | = | | | | | | = | | |
| | = | | | | | | = | | |
| | = | | | | | | = | | |
| | = | | | | | | = | | |
| | = | | | | | | = | | |
| | = | | | | | | = | | |

**BINARY TO HEXADECIMAL CONVERSION TABLE**

| BINARY | HEX | BINARY | HEX |
|---|---|---|---|
| 0000 | 0 | 1000 | 8 |
| 0001 | 1 | 1001 | 9 |
| 0010 | 2 | 1010 | A |
| 0011 | 3 | 1011 | B |
| 0100 | 4 | 1100 | C |
| 0101 | 5 | 1101 | D |
| 0110 | 6 | 1110 | E |
| 0111 | 7 | 1111 | F |

FIG. 7—COPY THIS TEMPLATE to simplify generating your own test routines.

## Multiple test groups

IC's with pins that can function as both inputs and outputs can be tested as follows. We'll use a 74LS245 octal bus transceiver for illustration. That IC is commonly used to buffer data into and out of a microprocessor; direction of data flow is controlled by a single DIR input (pin 1).

The data for testing the IC in send mode is shown in Fig 10; the data for testing it in receive mode is shown in Fig. 11. Notice that the data in both cases is identical except for the setting of the direction line.

The enable line of a registered (latched) IC must be toggled to ensure that the IC responds when it is enabled, and does not respond when it is not enabled. Fig. 12 shows the test pattern for a 74LS373 octal data latch. The outputs should follow the inputs when the enable line (pin 11) is high, and shouldn't change otherwise.

## Clocked logic

A clocked IC that has no means of setting or clearing its outputs will have an indeterminate state before it is clocked. Therefore, all outputs must be listed as indeterminate (D). The first state of a pin defined as indeterminate will be cleared to zero. (Only outputs can be indeterminate.) The remaining 7 states of the group will be processed normally. If more than one test group is needed, the first state of each additional group will not be indeterminate and should be defined as Output. Note in the test data that the clock line goes high in the odd-number cycles (1, 3, 5, and 7). The outputs will only change on those cycles, because the 74LS374 changes state during the leading clock edge. Test data is shown in Fig. 13.

## Multiple-output-state devices

An IC with many inputs or outputs may require more than one test group. (Remember that there is a maximum of five test groups per part number). For exam-

PART NUMBER (8 Alphanumeric Digits Maximum: 7404
NUMBER OF PINS (2 Digits Maximum, Even Numbers 4 to 24): 14
GROUP NUMBER (1 to 5): 1
REMARKS: HEX INVERTER

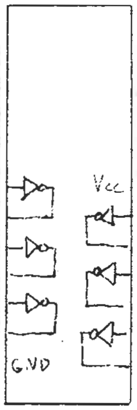

| Binary Data | | Hex | Funct | Pin# | Pin# | Binary Data | | Hex | Funct |
|---|---|---|---|---|---|---|---|---|---|
| | = | | | | | | = | | |
| | = | | | | | | = | | |
| | = | | | | | | = | | |
| | = | | | | | | = | | |
| | = | | | | | | = | | |
| 0101 0101 | = | 55 | I | 1 | 14 | | = | | X |
| 1010 1010 | = | AA | O | 2 | 13 | 0101 0101 | = | 55 | I |
| 0101 0101 | = | 55 | I | 3 | 12 | 1010 1010 | = | AA | O |
| 1010 0101 | = | AA | O | 4 | 11 | 0101 0101 | = | 55 | I |
| 0101 0101 | = | 55 | I | 5 | 10 | 1010 1010 | = | AA | O |
| 1010 1010 | = | AA | O | 6 | 9 | 0101 0101 | = | 55 | I |
| | = | | X | 7 | 8 | 1010 1010 | = | AA | O |

FIG. 8—TEST DATA FOR A 7404 hex inverter. All states are redundantly checked four times.

PART NUMBER (8 Alphanumeric Digits Maximum: 7404
NUMBER OF PINS (2 Digits Maximum, Even Numbers 4 to 24): 14
GROUP NUMBER (1 to 5): 1
REMARKS: IN-CIRCUIT

| Binary Data | | Hex | Funct | Pin# | Pin# | Binary Data | | Hex | Funct |
|---|---|---|---|---|---|---|---|---|---|
| | = | | | | | | = | | |
| | = | | | | | | = | | |
| | = | | | | | | = | | |
| | = | | | | | | = | | |
| | = | | | | | | = | | |
| 0101 0101 | = | 55 | I | 1 | 14 | | = | | X |
| 1010 1010 | = | AA | O | 2 | 13 | | = | | X |
| | = | | X | 3 | 12 | 0000 0000 | = | 00 | O |
| 0101 0101 | = | 55 | O | 4 | 11 | 0101 0101 | = | 55 | I |
| | = | | X | 5 | 10 | 1010 1010 | = | AA | O |
| 1010 1010 | = | AA | O | 6 | 9 | 0101 0101 | = | 55 | I |
| | = | | X | 7 | 8 | 1010 1010 | = | AA | O |

FIG. 9—TEST DATA FOR AN IN-CIRCUIT 7404. Input pins 3, 5, and 13 are marked X, for "ignore." Those pins might be hard-wired to ground, $V_{CC}$, or elsewhere in an actual circuit.

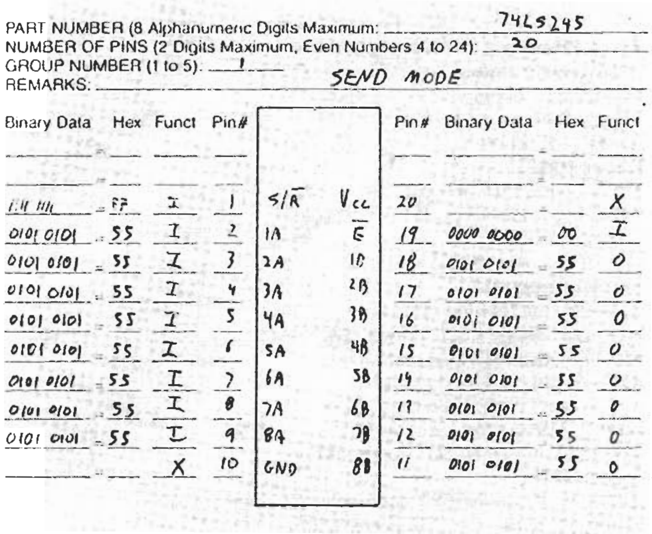

PART NUMBER (8 Alphanumeric Digits Maximum: 74LS245
NUMBER OF PINS (2 Digits Maximum, Even Numbers 4 to 24): 20
GROUP NUMBER (1 to 5): 1
REMARKS: SEND MODE

| Binary Data | Hex | Funct | Pin# | | | Pin# | Binary Data | Hex | Funct |
|---|---|---|---|---|---|---|---|---|---|
| 1111 1111 | FF | I | 1 | S/$\overline{R}$ | Vcc | 20 | | | X |
| 0101 0101 | 55 | I | 2 | 1A | $\overline{E}$ | 19 | 0000 0000 | 00 | I |
| 0101 0101 | 55 | I | 3 | 2A | 1B | 18 | 0101 0101 | 55 | O |
| 0101 0101 | 55 | I | 4 | 3A | 2B | 17 | 0101 0101 | 55 | O |
| 0101 0101 | 55 | I | 5 | 4A | 3B | 16 | 0101 0101 | 55 | O |
| 0101 0101 | 55 | I | 6 | 5A | 4B | 15 | 0101 0101 | 55 | O |
| 0101 0101 | 55 | I | 7 | 6A | 5B | 14 | 0101 0101 | 55 | O |
| 0101 0101 | 55 | I | 8 | 7A | 6B | 13 | 0101 0101 | 55 | O |
| 0101 0101 | 55 | I | 9 | 8A | 7B | 12 | 0101 0101 | 55 | O |
| | | X | 10 | GND | 8B | 11 | 0101 0101 | 55 | O |

FIG. 10—TEST SETUP FOR A 74LS245 octal bus transceiver in send mode.

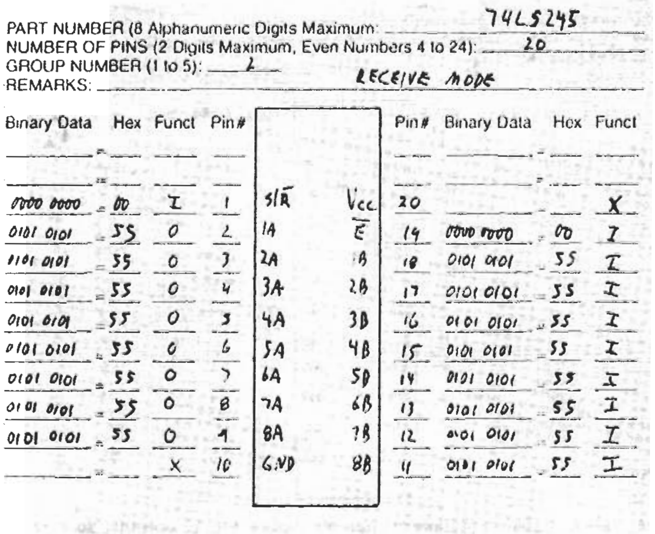

PART NUMBER (8 Alphanumeric Digits Maximum: 74LS245
NUMBER OF PINS (2 Digits Maximum, Even Numbers 4 to 24): 20
GROUP NUMBER (1 to 5): 2
REMARKS: RECEIVE MODE

| Binary Data | Hex | Funct | Pin# | | | Pin# | Binary Data | Hex | Funct |
|---|---|---|---|---|---|---|---|---|---|
| 0000 0000 | 00 | I | 1 | S/$\overline{R}$ | Vcc | 20 | | | X |
| 0101 0101 | 55 | O | 2 | 1A | $\overline{E}$ | 19 | 0000 0000 | 00 | I |
| 0101 0101 | 55 | O | 3 | 2A | 1B | 18 | 0101 0101 | 55 | I |
| 0101 0101 | 55 | O | 4 | 3A | 2B | 17 | 0101 0101 | 55 | I |
| 0101 0101 | 55 | O | 5 | 4A | 3B | 16 | 0101 0101 | 55 | I |
| 0101 0101 | 55 | O | 6 | 5A | 4B | 15 | 0101 0101 | 55 | I |
| 0101 0101 | 55 | O | 7 | 6A | 5B | 14 | 0101 0101 | 55 | I |
| 0101 0101 | 55 | O | 8 | 7A | 6B | 13 | 0101 0101 | 55 | I |
| 0101 0101 | 55 | O | 9 | 8A | 7B | 12 | 0101 0101 | 55 | I |
| | | X | 10 | GND | 8B | 11 | 0101 0101 | 55 | I |

FIG. 11—TEST SETUP FOR A 74LS245 octal bus transceiver in receive mode.

ple, the 74154 4-to-16 line decoder has four address inputs (pins 20–23), two active-low gate inputs (pins 18 and 19), and 16 outputs, one of which goes low when both gate inputs are low, depending on the state of the four address inputs. Figures 14, 15, and 16 show the data required to test the IC completely.

### Advanced commands

After generating test data you'll probably want to store it in your desktop computer. The tester provides storage for as many as 105 test routines, which you may upload to and download from the tester's internal memory.

After entering test data, if you wish to store it, press the Store key, and the data will be stored in memory for future use under the part number that is entered with the data.

To load a test routine from the tester's local memory, press Load and then enter the part number. If a corresponding routine is in memory, *CLEAR OR ENTER?* will appear on the display. Press Clr to erase the entry from memory, or press Enter to leave the data in the test buffer for testing or transfer to the external computer. To upload the data, press Send. To download it, press Recv. If you wish to retain a received file, press Store. Use the BASIC programs shown in Listings 1 and 2 to send and receive programs.

### Remote data generation

The BASIC program shown in listing 3 can be used to create test patterns somewhat more conveniently than on the tester itself. It is important to note that when using the program to generate test files, only hex characters (0–9, A–F) may be used in the part number (TF$) if the file is to be stored in the Tester's memory. The reason for this is that the Tester's keyboard has no other characters to access the test routine in its memory. Therefore you would not be able to load or delete the test routine. For example, a part entered as 74LS138 would be inaccessible because there is no L or S on the Tester's keyboard.

### Usage hints

First a few words of caution. Never connect the test clip to an IC that has power on it unless the tester is on and *COMMAND?* is scrolling in the display. Conversely, never shut the tester off when the clip is connected to a powered IC. And always make sure when testing in-circuit IC's that the tester and the DUT (*D*evice *U*nder *T*est) share a common ground. Connect the black test hook clip to a ground on the board near the IC's to be tested.

The test drivers (IC7–IC15) are rated at 7 volts maximum, so be careful what you connect the test clip to. A powered RS-232 driver might have ±12 volts, or even more, and voltages at those levels

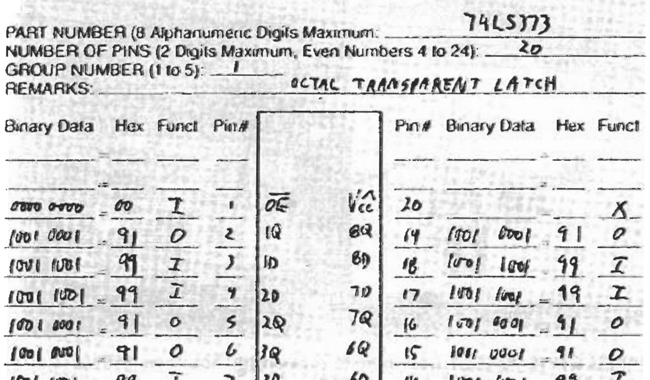

PART NUMBER (8 Alphanumeric Digits Maximum: 74LS373
NUMBER OF PINS (2 Digits Maximum, Even Numbers 4 to 24): 20
GROUP NUMBER (1 to 5): 1
REMARKS: OCTAL TRANSPARENT LATCH

| Binary Data | Hex | Funct | Pin# | | | Pin# | Binary Data | Hex | Funct |
|---|---|---|---|---|---|---|---|---|---|
| 0000 0000 | 00 | I | 1 | $\overline{OE}$ | Vcc | 20 | | | X |
| 1001 0001 | 91 | O | 2 | 1Q | 8Q | 19 | 1001 0001 | 91 | O |
| 1001 1001 | 99 | I | 3 | 1D | 8D | 18 | 1001 1001 | 99 | I |
| 1001 1001 | 99 | I | 4 | 2D | 7D | 17 | 1001 1001 | 99 | I |
| 1001 0001 | 91 | O | 5 | 2Q | 7Q | 16 | 1001 0001 | 91 | O |
| 1001 0001 | 91 | O | 6 | 3Q | 6Q | 15 | 1001 0001 | 91 | O |
| 1001 1001 | 99 | I | 7 | 3D | 6D | 14 | 1001 1001 | 99 | I |
| 1001 1001 | 99 | I | 8 | 4D | 5D | 13 | 1001 1001 | 99 | I |
| 1001 0001 | 91 | O | 9 | 4Q | 5Q | 12 | 1001 0001 | 91 | O |
| | | X | 10 | GND | E | 11 | 1011 0011 | B3 | I |

FIG. 12—TEST SETUP FOR A 74LS373 octal transparent data latch. Whenever the enable line (pin 11) is high, each output follows the corresponding input.

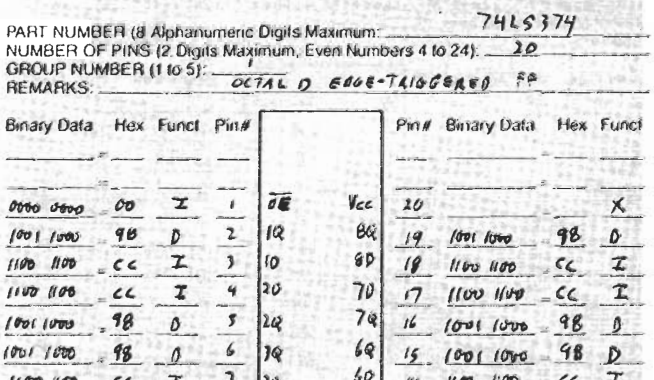

PART NUMBER (8 Alphanumeric Digits Maximum: 74LS374
NUMBER OF PINS (2 Digits Maximum, Even Numbers 4 to 24): 20
GROUP NUMBER (1 to 5): 1
REMARKS: OCTAL D EDGE-TRIGGERED FF

| Binary Data | Hex | Funct | Pin# | | | Pin# | Binary Data | Hex | Funct |
|---|---|---|---|---|---|---|---|---|---|
| 0000 0000 | 00 | I | 1 | $\overline{OE}$ | Vcc | 20 | | | X |
| 1001 1000 | 98 | D | 2 | 1Q | 8Q | 19 | 1001 1000 | 98 | D |
| 1100 1100 | CC | I | 3 | 1D | 8D | 18 | 1100 1100 | CC | I |
| 1100 1100 | CC | I | 4 | 2D | 7D | 17 | 1100 1100 | CC | I |
| 1001 1000 | 98 | D | 5 | 2Q | 7Q | 16 | 1001 1000 | 98 | D |
| 1001 1000 | 98 | D | 6 | 3Q | 6Q | 15 | 1001 1000 | 98 | D |
| 1100 1100 | CC | I | 7 | 3D | 6D | 14 | 1100 1100 | CC | I |
| 1100 1100 | CC | I | 8 | 4D | 5D | 13 | 1100 1100 | CC | I |
| 1001 1000 | 98 | D | 9 | 4Q | 5Q | 12 | 1001 1000 | 98 | D |
| | | | 10 | GND | CLK | 11 | 1010 1010 | AA | I |

FIG. 13—TEST SETUP FOR A 74LS374 octal D flip-flop. Data on each input is clocked into the corresponding output on the leading edge of each clock pulse. Clock pulses are applied to pin 11.

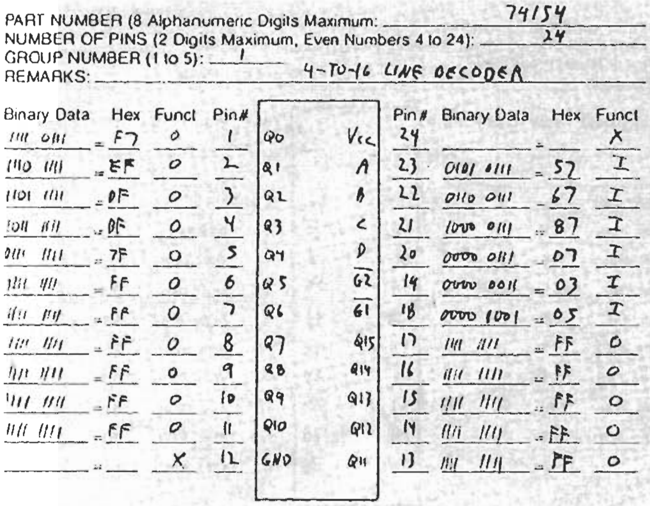

PART NUMBER (8 Alphanumeric Digits Maximum: 74154
NUMBER OF PINS (2 Digits Maximum, Even Numbers 4 to 24): 24
GROUP NUMBER (1 to 5): 1
REMARKS: 4-TO-16 LINE DECODER

| Binary Data | Hex | Funct | Pin# | | | Pin# | Binary Data | Hex | Funct |
|---|---|---|---|---|---|---|---|---|---|
| 1111 0111 | F7 | 0 | 1 | Q0 | Vcc | 24 | | | X |
| 1110 1111 | EF | 0 | 2 | Q1 | A | 23 | 0101 0111 | 57 | I |
| 1101 1111 | DF | 0 | 3 | Q2 | B | 22 | 0110 0111 | 67 | I |
| 1011 1111 | BF | 0 | 4 | Q3 | C | 21 | 1000 0111 | 87 | I |
| 0111 1111 | 7F | 0 | 5 | Q4 | D | 20 | 0000 0111 | 07 | I |
| 1111 1111 | FF | 0 | 6 | Q5 | $\overline{G2}$ | 14 | 0000 0011 | 03 | I |
| 1111 1111 | FF | 0 | 7 | Q6 | $\overline{G1}$ | 18 | 0000 1001 | 05 | I |
| 1111 1111 | FF | 0 | 8 | Q7 | Q15 | 17 | 1111 1111 | FF | O |
| 1111 1111 | FF | 0 | 9 | Q8 | Q14 | 16 | 1111 1111 | FF | O |
| 1111 1111 | FF | 0 | 10 | Q9 | Q13 | 15 | 1111 1111 | FF | O |
| 1111 1111 | FF | 0 | 11 | Q10 | Q12 | 14 | 1111 1111 | FF | O |
| | | X | 12 | GND | Q11 | 13 | 1111 1111 | FF | O |

FIG. 14—A 74154 demultiplexer has six inputs and 16 outputs, so it requires three test groups to test all combinations. Group 1 is shown here.

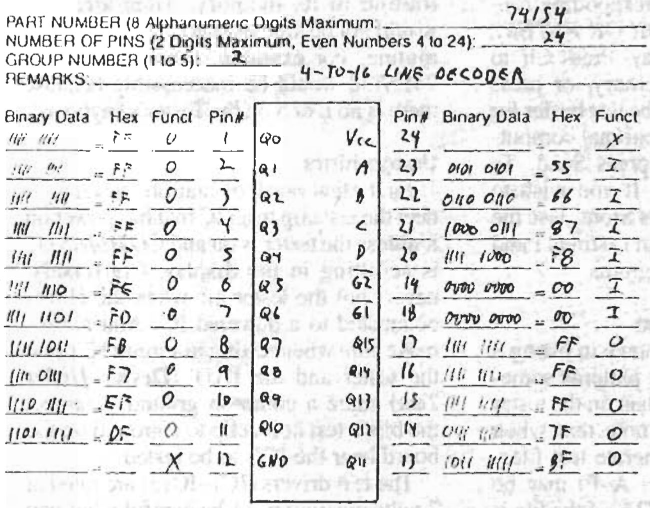

PART NUMBER (8 Alphanumeric Digits Maximum: 74154
NUMBER OF PINS (2 Digits Maximum, Even Numbers 4 to 24): 24
GROUP NUMBER (1 to 5): 2
REMARKS: 4-TO-16 LINE DECODER

| Binary Data | Hex | Funct | Pin# | | | Pin# | Binary Data | Hex | Funct |
|---|---|---|---|---|---|---|---|---|---|
| 1111 1111 | FF | 0 | 1 | Q0 | Vcc | 24 | | | X |
| 1111 1111 | FF | 0 | 2 | Q1 | A | 23 | 0101 0101 | 55 | I |
| 1111 1111 | FF | 0 | 3 | Q2 | B | 22 | 0110 0110 | 66 | I |
| 1111 1111 | FF | 0 | 4 | Q3 | C | 21 | 1000 0111 | 87 | I |
| 1111 1111 | FF | 0 | 5 | Q4 | D | 20 | 1111 1000 | F8 | I |
| 1111 1110 | FE | 0 | 6 | Q5 | $\overline{G2}$ | 14 | 0000 0000 | 00 | I |
| 1111 1101 | FD | 0 | 7 | Q6 | $\overline{G1}$ | 18 | 0000 0000 | 00 | I |
| 1111 1011 | FB | 0 | 8 | Q7 | Q15 | 17 | 1111 1111 | FF | O |
| 1111 0111 | F7 | 0 | 9 | Q8 | Q14 | 16 | 1111 1111 | FF | O |
| 1110 1111 | EF | 0 | 10 | Q9 | Q13 | 15 | 1111 1111 | FF | O |
| 1101 1111 | DF | 0 | 11 | Q10 | Q12 | 14 | 0111 1111 | 7F | O |
| | | X | 12 | GND | Q11 | 13 | 1011 1111 | BF | O |

FIG. 15—GROUP TWO OF THE 74154 TEST set is shown here.

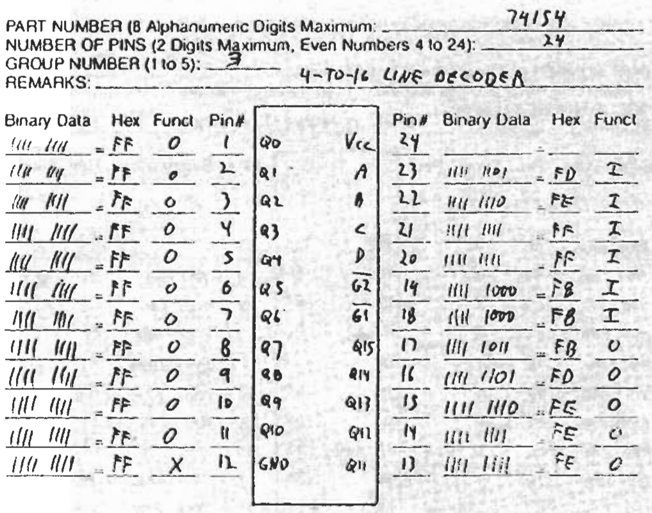

PART NUMBER (8 Alphanumeric Digits Maximum: 74154
NUMBER OF PINS (2 Digits Maximum, Even Numbers 4 to 24): 24
GROUP NUMBER (1 to 5): 3
REMARKS: 4-TO-16 LINE DECODER

| Binary Data | Hex | Funct | Pin# | | | Pin# | Binary Data | Hex | Funct |
|---|---|---|---|---|---|---|---|---|---|
| 1111 1111 | FF | 0 | 1 | Q0 | Vcc | 24 | | | |
| 1111 1111 | FF | 0 | 2 | Q1 | A | 23 | 1111 1101 | FD | I |
| 1111 1111 | FF | 0 | 3 | Q2 | B | 22 | 1111 1110 | FE | I |
| 1111 1111 | FF | 0 | 4 | Q3 | C | 21 | 1111 1111 | FF | I |
| 1111 1111 | FF | 0 | 5 | Q4 | D | 20 | 1111 1111 | FF | I |
| 1111 1111 | FF | 0 | 6 | Q5 | $\overline{G2}$ | 14 | 1111 1000 | F8 | I |
| 1111 1111 | FF | 0 | 7 | Q6 | $\overline{G1}$ | 18 | 1111 1000 | F8 | I |
| 1111 1111 | FF | 0 | 8 | Q7 | Q15 | 17 | 1111 1011 | FB | O |
| 1111 1111 | FF | 0 | 9 | Q8 | Q14 | 16 | 1111 1101 | FD | O |
| 1111 1111 | FF | 0 | 10 | Q9 | Q13 | 15 | 1111 1110 | FE | O |
| 1111 1111 | FF | 0 | 11 | Q10 | Q12 | 14 | 1111 1111 | FE | O |
| 1111 1111 | FF | X | 12 | GND | Q11 | 13 | 1111 1111 | FE | O |

FIG. 16—GROUP THREE OF THE 74154 TEST set is shown here.

## PARTS LIST

**All resistors are ¼-watt, 5% unless otherwise noted.**
R1—22,000 ohms
R2—330 ohms
R3–R6—1000 ohms
**Capacitors**
C1, C8—1000 µF, 16 volts, electrolytic
C2, C4–C7, C9–C17—0.1 µF, 10 volts, ceramic disc
C3—10 µF, 16 volts, electrolytic
**Semiconductors**
IC1—Z80 microprocessor
IC2—DS1230-104 32K nonvolatile RAM
IC3—MAX233 RS-232 interface
IC4—75499 custom decoder
IC5—75498 custom decoder
IC6—75500 custom decoder
IC7, IC10, IC13—NE591 open-emitter octal driver
IC8, IC11, IC14—NE590 open-collector octal driver
IC9, IC12, IC15—74LS373 octal latch
IC16—7805 5-volt regulator
IC17—2-Mhz crystal oscillator
D1—1N4001 rectifier
DISP1—DL1414 16-segment decoder/driver/display
**Other components**
F1—1-amp pigtail fuse
J1—9-pin D connector
P1, P2—right-angle double-row 20-pin male header strips
P3—right-angle double-row 26-pin male header strips
S1—minature SPDT toggle switch
S2—momentary SPST pushbutton
S3–S14—momentary SPST keyboard switches
T1—Transformer, 9.5–12-volts, 1-amp, wall-mount
**Miscellaneous:** One 10-pin, two 20-pin and one 26-pin double-row female IDC header connectors. Two 12-pin single-row female IDC header connectors. Flat ribbon cable and test clips.
**Note: The following are available from: ALPHA Electronics Corporation, P.O. Box 1005, Merritt Island, Florida 32952-1005, (305) 453-3534: Kit of parts for $299.00 + $6.00 P&H. Includes all parts, punched and screened panel, case, and labeled keys. Test cable and clips not included. Completely assembled tester for $399.00 + $6.00 P&H. Includes test cable with 16-, 20-, and 24-pin IC test clips. Partial kit, including all IC's (except IC16 and IC17), display, and PC boards for $199.00 + $5.00 P&H. Three custom IC's (75498, 75499 and 75500) for $60.00 + $4.00 P&H. Florida customers please add 5% State sales tax. Canadian customers please add $3.00 additional postage to all orders. All foreign orders add appropriate postage for Air shipping and insurance.**

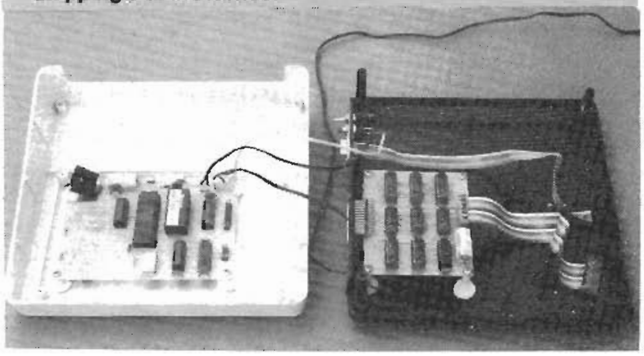

**INSIDE THE IC TESTER. Last time we showed you how to build the project; this month we show you how to use it.**

could damage the drivers easily. The display will probably dim if you inadvertently connect the test clip to an IC incorrectly, or if you have entered test data incorrectly. If the display does become dim, disconnect the test clip and remove power immediately.

In addition to testing IC's both in and out of circuit, the tester can also be used as a simple logic analyzer to test as many as twenty four points in a digital circuit. Simply replace the DIP clip with individual test-hook clips. Some lines would be used as outputs to stimulate the circuit, and others would be used as inputs to read the results. **R-E**

# PC SERVICE

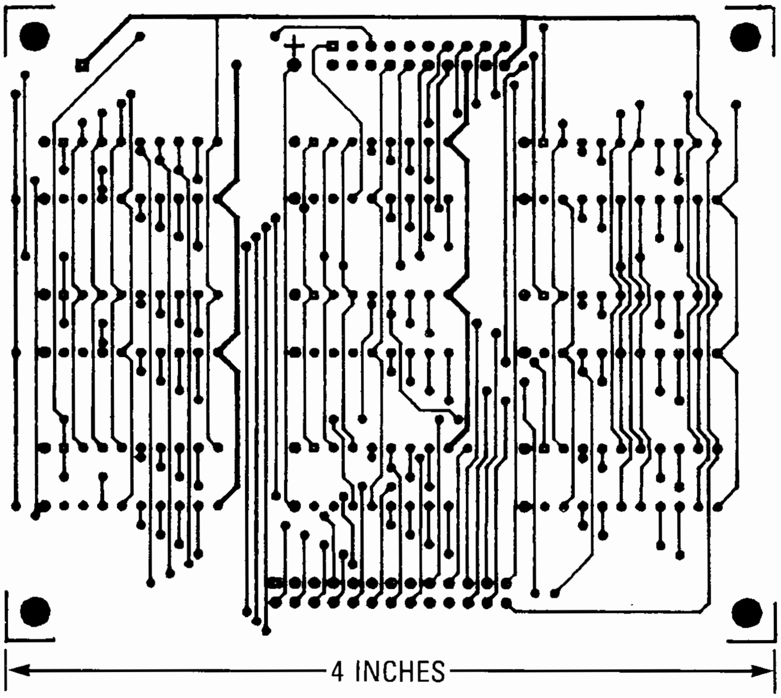

THE IC TESTER'S DRIVER BOARD. The foil side is shown here.

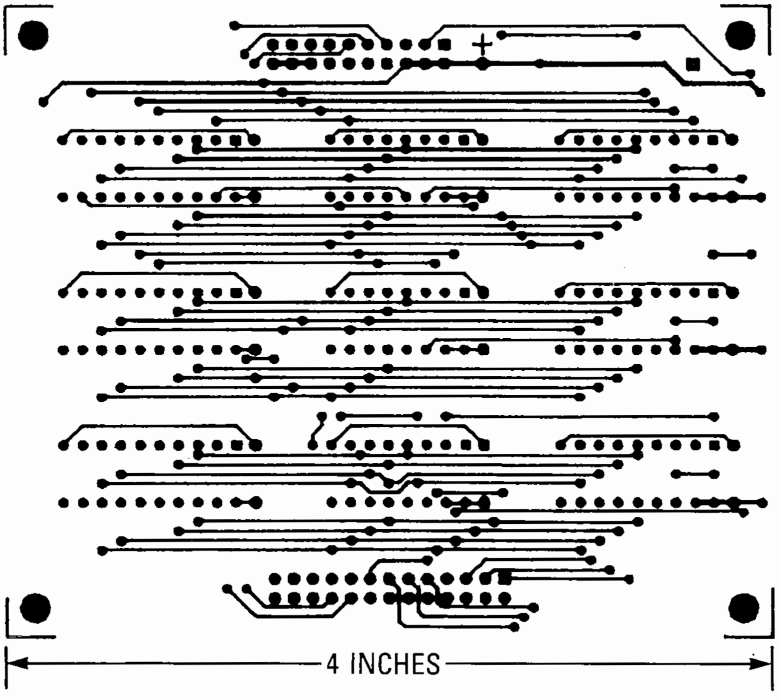

MOUNT THE COMPONENTS ON THIS SIDE of the IC Tester's driver board. The PC pattern for the main board will be shown next time.

One of the most difficult tasks in building any construction project featured in **Radio-Electronics** is making the PC board using just the foil pattern provided with the article. Well, we're doing something about it.

We've moved all the foil patterns to this new section where they're printed by themselves, full sized, with nothing on the back side of the page. What that means for you is that the printed page can be used directly to produce PC boards!

**Note:** The patterns provided can be used directly only for *direct positive photoresist methods.*

In order to produce a board directly from the magazine page, remove the page and carefully inspect it under a strong light and/or on a light table. Look for breaks in the traces, bridges between traces, and in general, all the kinds of things you look for in the final etched board. You can clean up the published artwork the same way you clean up you own artwork. Drafting tape and graphic aids can fix incomplete traces and doughnuts, and you can use a hobby knife to get rid of bridges and dirt.

An optional step, once you're satisfied that the artwork is clean, is to take a little bit of mineral oil and carefully wipe it across the back of the artwork. That helps make the paper transluscent. Don't get any on the front side of the paper (the side with the pattern) because you'll contaminate the sensitized surface of the copper blank. After the oil has "dried" a bit—patting with a paper towel will help speed up the process—place the pattern front side down on the sensitized copper blank, and make the exposure. You'll probably have to use a longer exposure time than you are used to.

We can't tell you exactly how long an exposure time you will need as it depends on many factors but, as a starting point, figure that there's a 50 percent increase in exposure time over lithographic film. But you'll have to experiment to find the best method for you. And once you find it, stick with it.

Finally, we would like to hear how you make out using our method. Write and tell us of your successes, and failures, and what techniques work best for you. Address your letters to:

**Radio-Electronics**
Department PCB
500-B Bi-County Blvd.
Farmingdale, NY 11735

# In-circuit IC tester checks TTL and C-MOS

by Ronald G. Ferrie
*Communications & Controls Co., Pittsburgh, Pa.*

An in-circuit IC logic tester, which can be built easily and inexpensively, can check ICs operating from supply voltages of 5 to 15 V. This means that the tester can be used for C-MOS devices, as well as TTL devices. The IC, however, must be powered from a single-polarity supply.

Although the test circuit draws its operating power from the IC being checked, it does not load the IC's logic points. Total operating current is usually less than 60 milliamperes for a typical 16-pin IC package.

Figure 1 shows what the test circuit looks like for checking three logic points. Light-emitting diodes are used to indicate whether the input signal is logic 0 or logic 1. As the truth table indicates, a logic 1 at an input causes the LED associated with that input to light. A pair of junction diodes and an inverting C-MOS buffer are used to gate each logic signal for driving the LED.

This simple arrangement can be easily extended to handle any number of logic inputs by simply adding more stages—an additional buffer, diode pair, LED, and current-limiting resistor for each new logic input to be checked.

To conserve power, the indicator LEDs are operated at 2 mA. Because of this, the LEDs will have a low luminous output, making it necessary to mount them so that they do not compete with ambient light. Recessing the lamps slightly and providing a dark background color is usually adequate. For this tester, the LEDs and their associated electronics were mounted in a small plastic box and connected to the IC under test by means of a cable terminated in a dual in-line test clip.

Figure 2 shows a complete test circuit for a 16-pin DIP. Resistor $R_2$ is included here at each input to prevent ambiguity when an IC with uncommitted terminals is being measured. The power supply formed by the zener diode and the transistor is poorly regulated—its main purpose is to limit the voltage driving the LEDs and thereby conserve current consumption. ☐

---

Engineer's Notebook is a regular feature in Electronics. We invite readers to submit original design shortcuts, calculation aids, measurement and test techniques, and other ideas for saving engineering time or cost. We'll pay $50 for each item published.

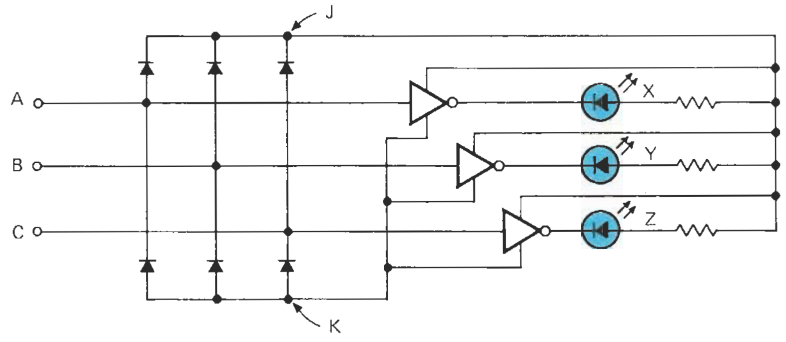

TRUTH TABLE

| A | B | C | X | Y | Z | J | K |
|---|---|---|---|---|---|---|---|
| 0 | 0 | 0 | 0 | 0 | 0 | 0 | 1 |
| 0 | 0 | 1 | 0 | 0 | 1 | 1 | 0 |
| 0 | 1 | 0 | 0 | 1 | 0 | 1 | 0 |
| 0 | 1 | 1 | 0 | 1 | 1 | 1 | 0 |
| 1 | 0 | 0 | 1 | 0 | 0 | 1 | 0 |
| 1 | 0 | 1 | 1 | 0 | 1 | 1 | 0 |
| 1 | 1 | 0 | 1 | 1 | 0 | 1 | 0 |
| 1 | 1 | 1 | 1 | 1 | 1 | 1 | 0 |

**1. Simple go/no-go check.** The basic circuit employed by the in-circuit IC tester is illustrated here for three logic inputs. Light-emitting diodes indicate the presence of a logic 1 at the input. A C-MOS buffer and a pair of junction diodes gate each logic signal.

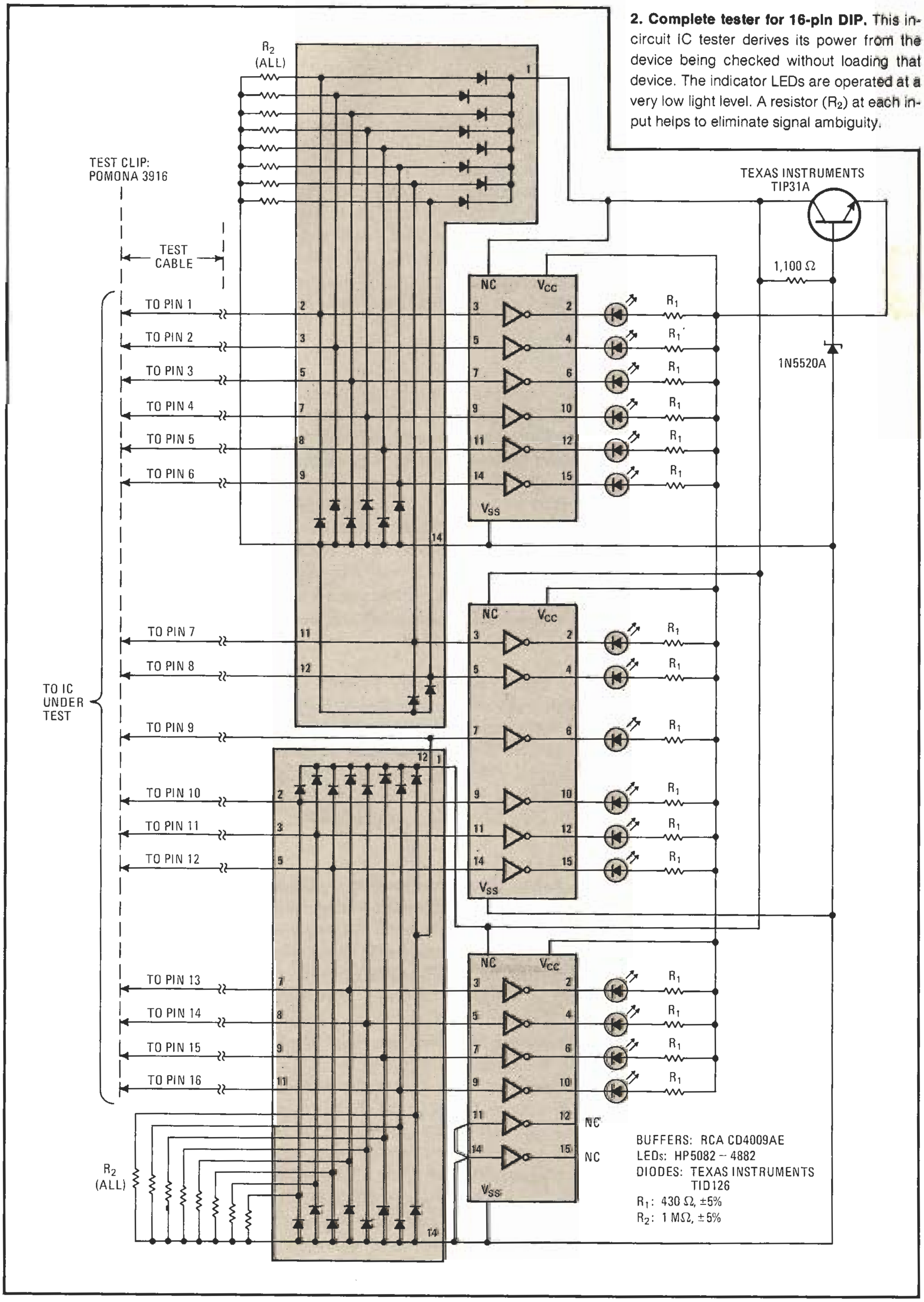

**2. Complete tester for 16-pin DIP.** This in-circuit IC tester derives its power from the device being checked without loading that device. The indicator LEDs are operated at a very low light level. A resistor ($R_2$) at each input helps to eliminate signal ambiguity.

# Automatic Diode Checker

### *Makes a complete check in 1/60th of a second.*

BY R. M. STITT

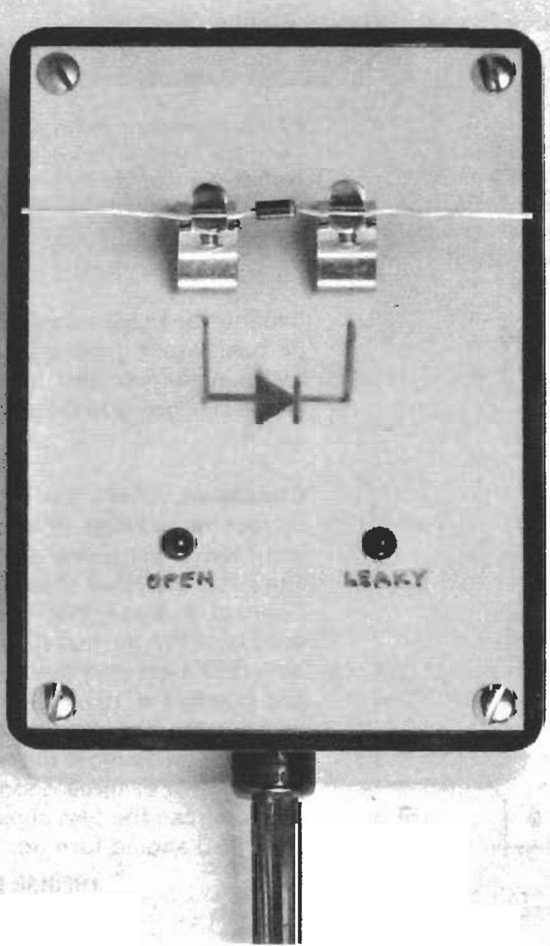

MOST EXPERIMENTERS think that using an ohmmeter is the best way to test a semiconductor diode. However, some ohmmeters supply too much current to the device, causing an "open" where one does not really exist. Other meters indicate values of forward and reverse resistance, which hopefully give an indication of the diode's condition.

In the Automatic Diode Checker described here, the diode is tested in the forward-bias condition for excessive voltage drop and then in the reverse condition for excessive leakage current. Each test is made during one half of the power-line frequency, and the results are displayed simultaneously on two LED's labeled OPEN and LEAKY. The LED marked OPEN is illuminated when there is excessive voltage drop. The other is lit when there is excessive reverse leakage. If the diode fails both tests, both LED's are on. With no diode in the clips, the OPEN indicator is on.

When a good diode is inserted in the test clips (correctly oriented), both LED's should be off. There will be no damage to either the diode being tested or the diode tester if the diode is inserted the wrong way; but both LED's will glow.

The peak reverse voltage is less than 18 volts and the peak forward current is less than 4 mA. With the values shown in Fig. 1, OPEN indicates a forward voltage drop in excess of 1.3 volts at 3 mA; and LEAKY indicates a reverse leakage current of about 0.05 mA at 16 volts.

**How It Works.** On one half cycle of the ac supply, the OPEN circuit is active (*D1, D2, D3, R2, R3, Q1* and *LED1*). In this half cycle the upper ac line is positive. (*D4* and *D5* are reverse-biased to isolate the other part of the circuit.) Current, limited by *R2*, flows through *D1* and the diode being tested. The voltage across the test diode is applied through *D3* to the base of *Q1*. If this voltage exceeds 1.3 V, *Q1* turns on and sinks current through *LED1*, indicating high forward drop.

When the ac supply reverses, the lower part of Fig. 1 is active, with *D1* and *D2* reverse-biased to shut out the OPEN part of the circuit. Any reverse leakage current through the test diode flows through *R1*, creating a potential across it. This voltage is applied to the base of *Q2* through *R7* and *D5*. When this voltage exceeds about 2 volts, *Q2* is energized, turning on *Q3* and *LED2*.

Since the circuit uses a conventional 12-volt transformer, no dc supply is required and all switching is performed automatically at 60 Hz.

**Construction.** Although circuit layout is not critical and any type of construction can be used, a unique approach was used in the author's prototype as shown in the photographs. The pc board foil pattern shown in Fig. 2 can be used to make a board which has the components mounted on one side with the other side serving as the cover for the plastic case. The component holes are drilled only half-way into the board. The only holes drilled all the way through the board are those for mounting the LED's and the diode test clips. The other components are mounted by bending and cutting their leads so that they just fit on their pads. Solder must be applied quickly and properly to insure a good mechanical hold.

Transformer *T1* can be attached to the bottom of the plastic case, with plastic foam insulation between the transformer and the components on the board. Use a grommet on the hole for the line cord in the side of the case.

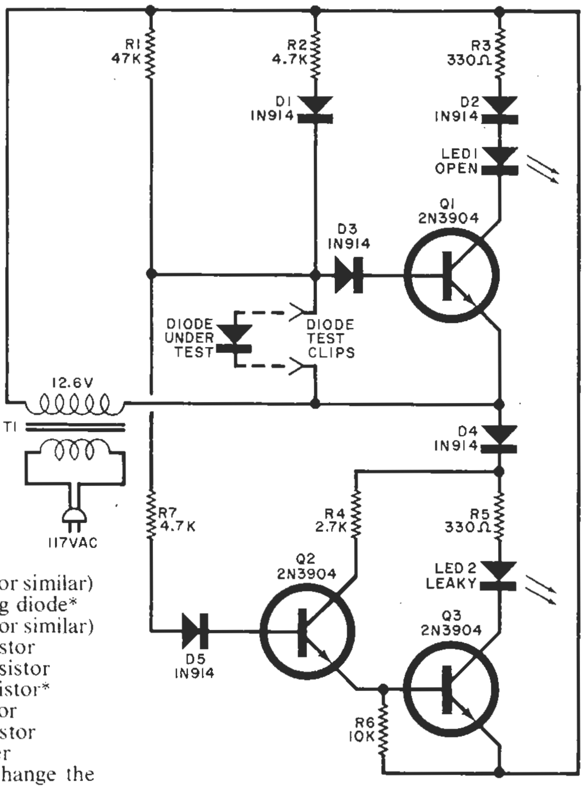

*Fig. 1. The "open" circuit operates when upper ac line is positive. "Leaky" circuit operates when this line is negative. Both circuits test diode at line frequency.*

### PARTS LIST

D1 to D5—Silicon diode (1N914 or similar)
LED1,LED2—Red light emitting diode*
Q1,Q2,Q3—Transistor (2N3904 or similar)
R1—47,000-ohm, ¼-W, 5% resistor
R2,R7—4700-ohm, ¼-W, 5% resistor
R3,R5—330-ohm, ¼-W, 5% resistor*
R4—2700-ohm, ¼-W, 5% resistor
R6—10,000-ohm, ¼-W, 5% resistor
T1—12.6-V, 100-mA transformer
*R3 and R5 can be varied to change the brightness of the LED's.
Misc.—Diode test clips, plastic case (Harry Davis #220 or similar), line cord, grommet, mounting hardware, etc.

Note: A complete kit of parts is available from: Atlantis, Box 12654, Tucson, AZ 85711, for $19.95.

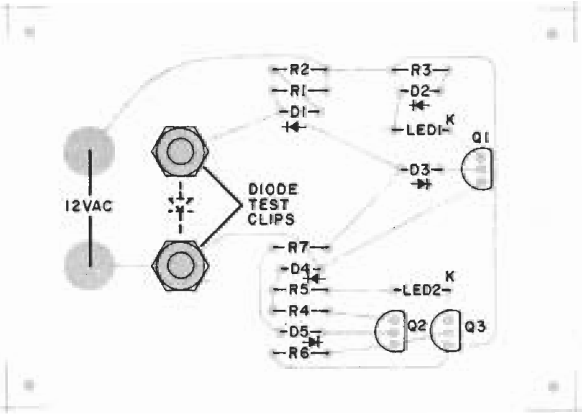

*Fig. 2. Pc board can be used as case cover with component mounting as shown at left.*

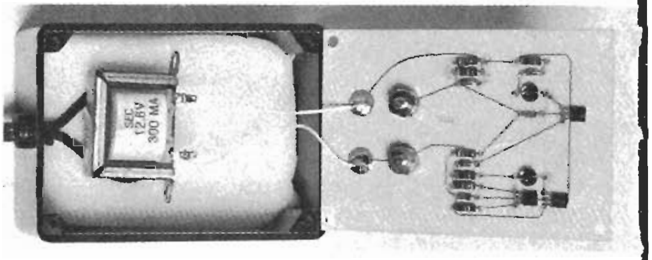

*Photo shows how components are mounted on pc board with the transformer in the bottom of the case with foam insulation.*

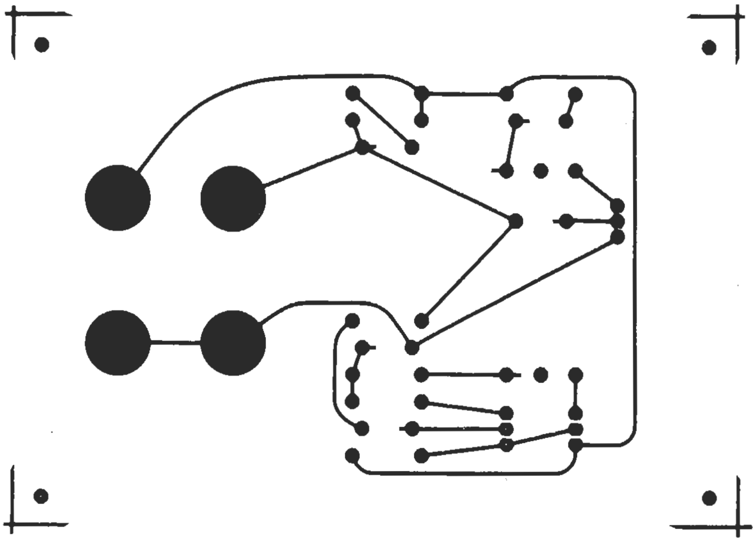

Identify the LED's on the front of the pc board, and draw a diode symbol between the two test clips with the anode side going to the junction of *D1* and *R1*.

**Checkout.** Check the pc board for correct installation of components, and then apply power to the tester. The OPEN indicator should come on. Connect a diode that you know is good between the test clips. Note that both LED's are off. Remove the diode and connect a 100,000-ohm resistor between the test clips. Note that both LED's are on. Remove the resistor and connect two or three good diodes in series across the test clips. Only the OPEN LED should turn on. ◆

# NON-DESTRUCTIVE TRANSISTOR TESTER

## *Check or Match Transistors and Diodes*

BY JOHN L. KEITH

BUYING SURPLUS or bargain-package transistors is a little like buying a pig in a poke. Especially if you get one of those so-called "computer boards" to which several transistors, usually unmarked, are connected. You may get some real high-quality, expensive units--some others may be completely useless. For the most part, the transistors that are in operating condition can be put to good use by the experimenter, provided he can sort them out as to type and identify their parameters. This can be done of course with a good transistor checker but not everyone has one of those so the simple transistor tester described here comes in very handy and saves time and money.

The transistor tester can be used to check either npn or pnp transistors and will measure leakage down to 10 $\mu$A and collector current to 10 mA. You can measure $I_{co}$, $I_c$ (with 20 or 100 $\mu$A of base current), $I_{CEO}$, $I_{CES}$, and $I_{EO}$ (see sidebar for definitions). Diodes can also be checked by connecting them between the collector and emitter pins of the test socket. The tester is also useful for checking two transistors that must be matched for a specific application.

The tester has been designed so that it will check almost any type of transistor and cannot harm a unit regardless of the switch positions or the way the transistor is connected to the test socket.

**Construction.** As shown in the photographs, the prototype was built in a conventional plastic utility box with all components except the batteries mounted on the cover and with point-to-point wiring. The circuit is shown in Fig. 1.

The internal resistance of the meter movement is an integral part of the circuit. The combined resistance of the meter, *R5*, and *R4*

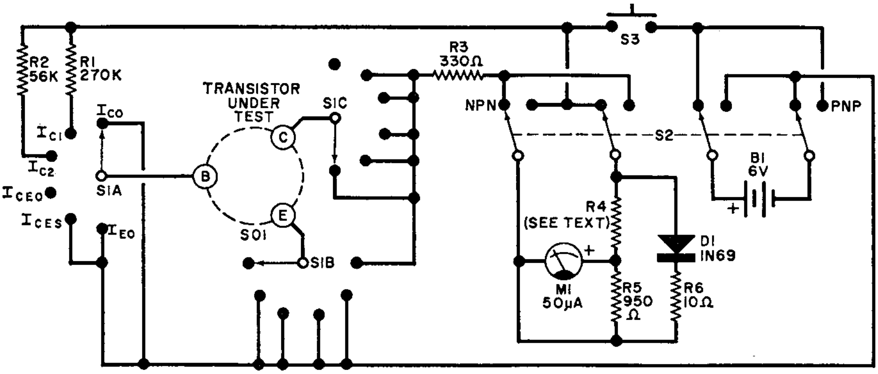

Fig. 1. All major transistor parameters can be checked using this tester since the novel circuit enables measurements from a low of 10 microamperes to high of 10 milliamperes.

### PARTS LIST

*B1—6-volt battery (4 flashlight cells)*
*D1—1N69 diode*
*M1—50-μA meter (Calector D1-910 or similar)*
*R1—270,000-ohm, ½-watt resistor*
*R2—56,000-ohm, ½-watt resistor*
*R3—330-ohm, ½-watt resistor*
*R4—See text*
*R5—950-ohm, ½-watt resistor*
*R6—10-ohm, ½-watt resistor*
*S1—Three-pole, six-position rotary switch*
*S2—Four-pole, two-position rotary switch (Calectro E2-167 or similar)*
*S3—Spst, normally open pushbutton switch (Calectro E2-140 or similar)*
*SO1—Transistor socket*
*Misc.—Suitable cabinet with cover (Calectro J4-726), knobs (2), battery holder, mounting hardware, wire, solder, etc.*

must be 12,000 ohms. The value of *R4* must be chosen to obtain this value as closely as possible. With the meter specified in the Parts List, *R4* should be about 11,000 ohms. This insures full compression and, with the circuit of *D1* and *R6*, provides a full-scale reading of 10 mA.

**Operation.** Insert the transistor to be tested in the test socket, place *S1* on either $I_{C1}$ or $I_{C2}$, and depress pushbutton switch *S3*. The meter should deflect upscale when *S2* is in the proper position. The position of the switch for upscale deflection determines whether the transistor is npn or pnp.

To check the dc gain ($H_{FE}$) of the transistor, place *S1* on either $I_{C1}$ or $I_{C2}$, depress *S3*, and note the meter indication. Then determine the gain from the conversion table. Note that position $I_{C1}$ is for a base current of 20 μA while position $I_{C2}$ supplies a base current of 100 μA. The gain is different for the different base currents.

The other four positions of *S1* are to test

### PARAMETER DEFINITIONS

$I_{CEO}$—Collector current with base open. The polarity of the applied voltage is such that the collector-base junction is biased in a reverse direction.

$I_{CES}$—Collector leakage current with base shorted to emitter. Equivalent to the leakage current of collector diode if emitter junction were not present. The polarity of the applied voltage is such that the collector-base junction is biased in a reverse direction.

$I_{EO}$—Sometimes called $I_{EBO}$. Emitter-base current with collector open. The polarity of the applied voltage is such that the emitter-base junction is biased in the reverse direction.

$I_{CO}$—Sometimes called $I_{CBO}$. Collector-base current with emitter open. The polarity of the applied voltage is such that the collector-base junction is biased in the reverse direction.

$I_C$—Collector current—depends on the amount of base current supplied. A measure of dc gain ($H_{FE}$).

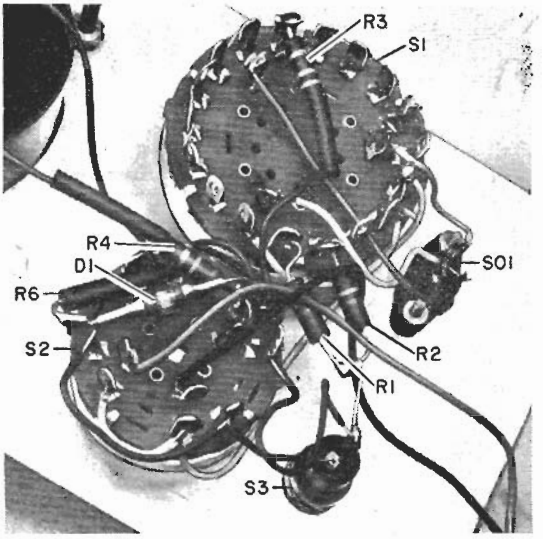

All the components except the battery are mounted on the front panel. The small parts such as resistors, capacitors and diodes are soldered directly to the two switches.

for leakage currents. Obviously, the less leakage in any case, the better. In these tests, the meter indicates directly in microamperes.

To check a diode, connect it between the emitter and collector pins of the test socket and place *S1* in either the $I_{C1}$ or $I_{C2}$ position. Depress *S3* and note the meter readings when *S2* is in the npn and pnp positions. Ideally, in one position, the meter should indicate full scale and it should give no indication in the other position—indicating that the diode conducts in one direction and not the other. The lower the ratio between the two readings, the poorer the diode. -30-

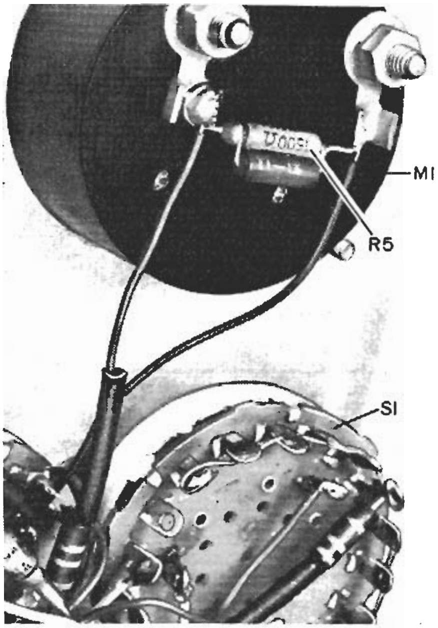

Two resistors in parallel are used to make up the meter shunt resistor (R5) in order to obtain the required resistance value. Here again the components are mounted directly on the meter terminals.

# OUT OF TUNE

In "Non-Destructive Transistor Tester" (March, p 47) the following table was omitted.

## GAIN CONVERSION TABLE

| Meter Indication | Current | $H_{FE}$ | |
|---|---|---|---|
| | | $I_{C1}$ | $I_{C2}$ |
| 2 | 10 μA | 0.5 | 0.1 |
| 3 | 15 | 0.75 | 0.15 |
| 4 | 30 | 1.5 | 0.3 |
| 5 | 50 | 2.5 | 0.5 |
| 6 | 100 | 5 | 1.0 |
| 7 | 140 | 7 | 1.4 |
| 8 | 200 | 10 | 2 |
| 9 | 300 | 15 | 3 |
| 10 | 400 | 20 | 4 |
| 12 | 600 | 30 | 6 |
| 14 | 900 | 45 | 9 |
| 16 | 1.2 mA | 60 | 12 |
| 18 | 1.6 | 80 | 16 |
| 20 | 2.0 | 100 | 20 |
| 22 | 2.36 | 118 | 23 |
| 24 | 2.75 | 137 | 27 |
| 26 | 3.26 | 163 | 32 |
| 28 | 3.48 | 174 | 35 |
| 30 | 4.05 | 200 | 40 |
| 32 | 4.55 | 228 | 45 |
| 34 | 5.1 | 255 | 51 |
| 36 | 5.75 | 277 | 57 |
| 38 | 6.17 | 308 | 62 |
| 40 | 6.63 | 332 | 66 |
| 42 | 7.30 | 365 | 73 |
| 44 | 7.85 | 382 | 78 |
| 46 | 8.43 | 420 | 84 |
| 48 | 9.26 | 463 | 93 |
| 50 | 9.85 | 494 | 99 |

# Versatile, Inexpensive SEMICONDUCTOR JUNCTION TESTER

## CHECKS DIODES, TRANSISTORS, AND IDENTIFIES TYPES

**BY IRA CHAYUT**

FOR A FAST, inexpensive way to check the condition of a diode or transistor junction, use the circuit shown at A. The transformer should have a secondary rated between 6 and 12.6 volts (conventional filament type). The diodes can be any silicon rectifier types; and the lamps should be rated for 6 volts at low current.

The circuit can be constructed in any convenient manner. However, the two test contacts (Emitter/Collector and Base) should be about 1 inch apart on the front of the container. The lamp marked NPN should be adjacent to the Emitter/Collector contact, and the PNP lamp should be near the Base contact. Beneath and centered between the two test contacts, install the legend "Lamp Adjacent to Contact Indicates Cathode."

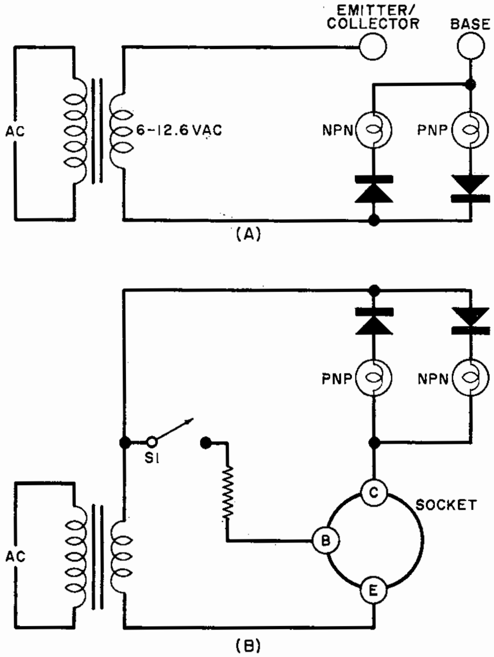

(A)

(B)

Two simple checking circuits.

To test a diode, connect it between the two test contacts. If neither lamp lights, the diode is open. If both lamps light, the diode is shorted; and if only one lamp lights, that lamp indicates the cathode end of the diode.

**Transistor Tests.** To test transistor junctions, connect the base lead to the Base test contact and either the emitter or collector to the other contact. The lit bulb indicates the type of transistor. If both lamps light, the transistor is shorted; and if neither lamp lights, the transistor is open.

The test circuit can also be used as a simple continuity checker by connecting a pair of leads to the test points. Note that this is a continuity checker, and even a low resistance in series with the tested circuit will not permit the lamps to light.

**Go-No-Go Transistor Tester.** If all you need is a simple transistor go-no-go tester, which will identify the type of transistor (npn or pnp) and whether or not it works, use the circuit shown at B.

Operation and components are similar to those in the A circuit. With a transistor plugged into the test socket and with *S1* open, if either one or both lamps go on, the transistor has an internal short. If neither lamp goes on, close *S1*. Then if the transistor is good, one lamp will come on and indicate the type. If neither lamp lights when *S1* is closed, the transistor is open. The base resistor can be any value from 680 ohms to a few thousand ohms.

Of course, you can connect insulated test leads to the three terminals on the socket and terminate these in insulated alligator clips. In this way, you can check transistors that will not fit into the socket. ◆

# Letters

## PLAY IT SAFE, USE LED'S

With regard to the "Semiconductor Junction Tester" (February 1973), the project will destroy transistors under test. Cold lamp bulbs typically draw between 12 and 15 times their steady-state currents; so, when the Junction Tester is used, large inrush currents will flow in the transistor under test. If, for example, a small 30-mA lamp were used, currents of up to 400 mA would flow through the transistor for several milliseconds. If this current were fed into the base of a signal transistor, it would in all likelihood destroy the transistor. I suggest that the lamps specified in the Parts List of the project be replaced with light-emitting diodes (LED's) as shown in the diagram. The LED's can be operated at a safe 5 or 10 mA.

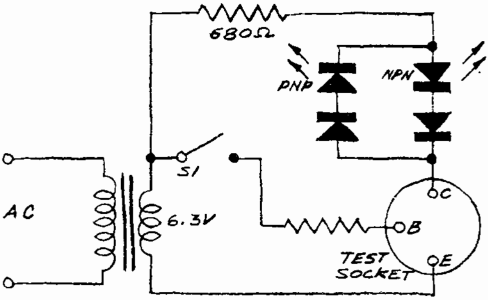

Richard W. Fox
General Electric Application Engineering
Auburn, N.Y.

*Many thanks for bringing this information to our and our readers' attention.*

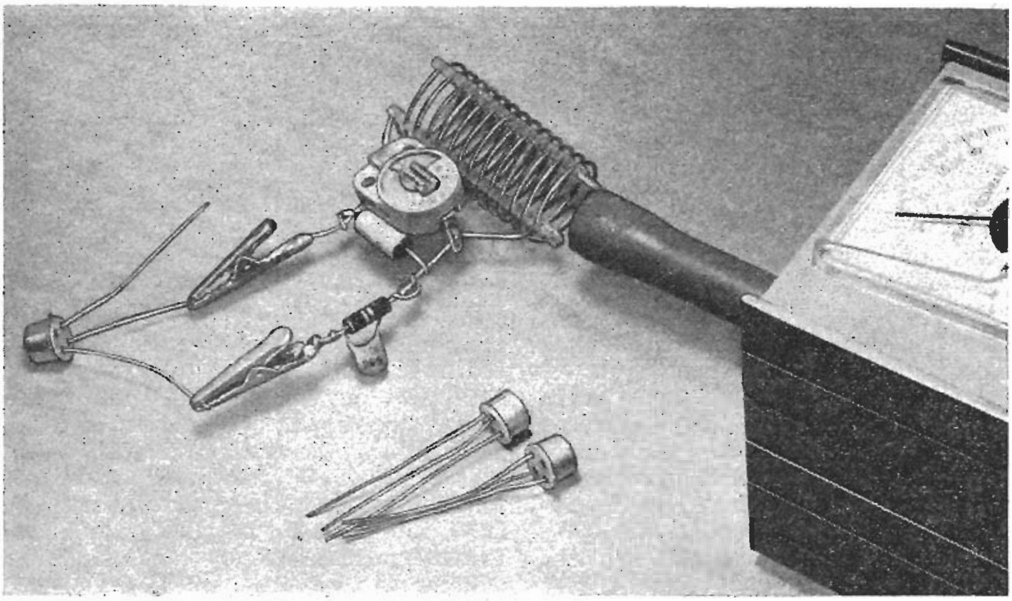

# Transistor Sorter

## ARE THEY AUDIO, LOW R.F., OR VHF? FIND OUT WITH THIS SIMPLE TESTER

BY RAYMOND F. ARTHUR

MANY ELECTRONICS hobbyists have accumulated signal transistors from bargain packs, surplus computer boards, and other sources. The problem is that most such transistors lack "2N" identification markings, and in the cases where user production numbers are provided, the problem is only compounded. Sure, almost any transistor tester will show whether an unknown transistor is *npn* or *pnp* and provide gain data. But how do you find out if it's suitable for audio or r.f. applications?

Well, if you own or can get your hands on a grid-dip oscillator, you can sort your transistors into application categories (audio, i.f., h.f., etc.). This type of sorting is possible because the shunting action of the base-to-collector capacitance of the *pn* junction causes transistor gain to drop off as frequency is increased. Relating this phenomenon to application sorting, the lower the junction capacitance (less pronounced dropoff in gain with increasing frequency), the higher the frequency at which the transistor can be operated.

In addition to a grid-dip oscillator, you will need a parallel-resonant tank circuit (*L1* and *C1* in Fig. 1) to sort transistors according to application. With the alligator clips open-circuited, *L1* and *C1* should resonate at a frequency of about 30 MHz. Any added capacitance (connected between the clips) lowers the resonant frequency of the tank circuit and causes a correspondingly lower dip point on the GDO.

The *L1-C1* tank circuit, when properly assembled, should be self-supporting as shown in photo. For *L1*, use a 16-turn length of Barker and Williamson #3015 "Miniductor" (1" coil diameter, 16 turns/in. of #21 wire). Unwrap one turn from each end of the coil, leaving 14 complete turns and ending up with two 2" leads oriented perpendicular to the axis of the coil.

Slip the unwrapped leads through the solder lugs of trimmer capacitor *C1* and

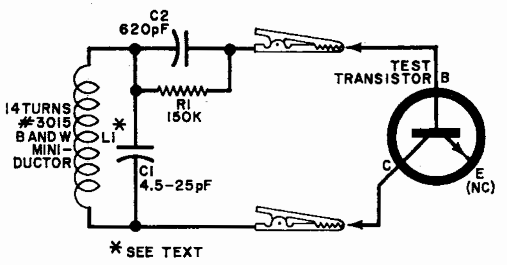

Fig. 1. The base and collector leads of the test transistor connect to the tank circuit through alligator clips. Reverse-bias voltage across the junction is developed across C2 and R1.

solder into place 1½″ from the coil. Then solder a miniature alligator clip to one of the coil leads. Clip off the excess length of the other coil lead at *C1*, and solder *C2* and *R1* to *C1*; make sure the leads of *C2* and *R1* are clipped short. Finally, solder another alligator clip to the unconnected sides of *R1* and *C2*.

In use, the tank circuit should be placed in a small plastic box to permit easy alignment of the axes of *L1* and the coil of the GDO. With the alligator clips open-circuited and positioned where they can accept the leads of a transistor, gently adjust *C1* for a dip at 30 MHz. Shorting the alligator clips together should shift the dip to 3 MHz.

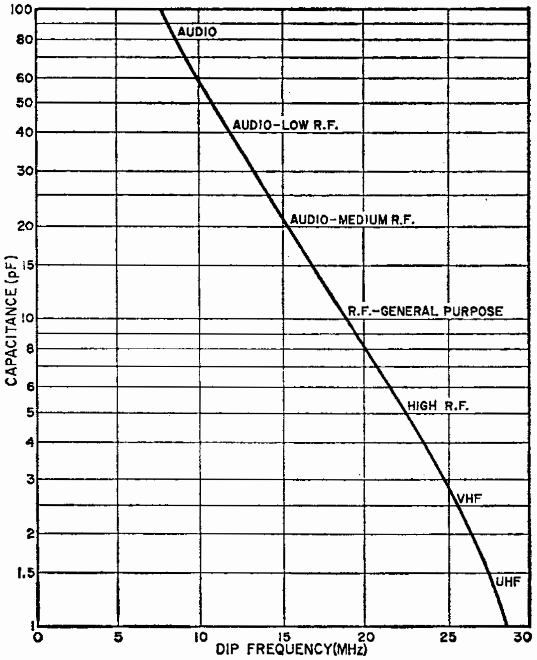

Fig. 2. For low-power transistors, junction capacitance is shown as a function of the dip frequency.

Connect the base and collector leads of the transistor to be tested to the alligator clips; it doesn't matter which lead goes to which clip. Now, avoiding overcoupling between the tank circuit and GDO, determine the frequency at which the GDO pointer dips.

Refer to the graph provided in Fig. 2 for measured capacitance or transistor type. This graph indicates a general trend of very low capacitance for UHF transistors to higher capacitance for audio transistors. It is not practical to indicate precise regions for various transistor types on the graph because of overlaps and other factors that might affect the high-frequency operation of transistors.

Although collector capacitance plays an important part in setting the upper frequency limit of transistors, other factors such as current gain, base resistance, and overall power gain are also important. If current gain is known and two transistors show about the same output capacitance, but have widely differing gains (say 30 and 300), the lower gain transistor should be rated downward in frequency capability.

The graph of Fig. 2 is intended for use with low-power transistors—not power transistors. With a few exceptions, all transistors you check will produce a dip on the GDO. Failure to obtain a dip may indicate a very leaky transistor, an unusually low collector-to-base breakdown voltage, or unusually low Q of the junction capacitance.

Considering its simplicity and low cost, the GDO method of sorting transistors affords the experimenter and hobbyist with a simple and useful means of judging the relative frequency capabilities of small unidentified transistors. -30-

# BUILD THE SCR TESTER

BY JAMES W. CUCCIA

## PLAN TO RE-USE AN SCR? YOU'LL WANT TO CHECK IT OUT FIRST

SILICON controlled rectifiers (SCR's) are becoming very popular with the electronics experimenter. However, there is one major drawback. Once you have a couple of used SCR's lying around, how do you test them? Conventional transistor testers can't do the job, and there are no low-cost SCR testers on the market.

For about $12, you can make an excellent SCR tester that will tell you whether or not a particular SCR is good or not. (Since SCR's fail catastrophically, there is no such thing as testing them for "weakness" or degradation.) This tester will also tell you how much gate current is required to fire an SCR and how much anode current is required to hold it in conduction once it has fired. Knowing whether or not an SCR is good, and having values for its minimum gate triggering current and minimum anode holding current, you are ready to put it to use.

You can't determine the SCR's maximum current rating since, in doing so, you might very easily ruin it. Maximum current and voltage ratings can be found in the manufacturer's literature.

**Construction.** The author built his version in a 6¼″ × 3¾″ × 1⅞″ plastic

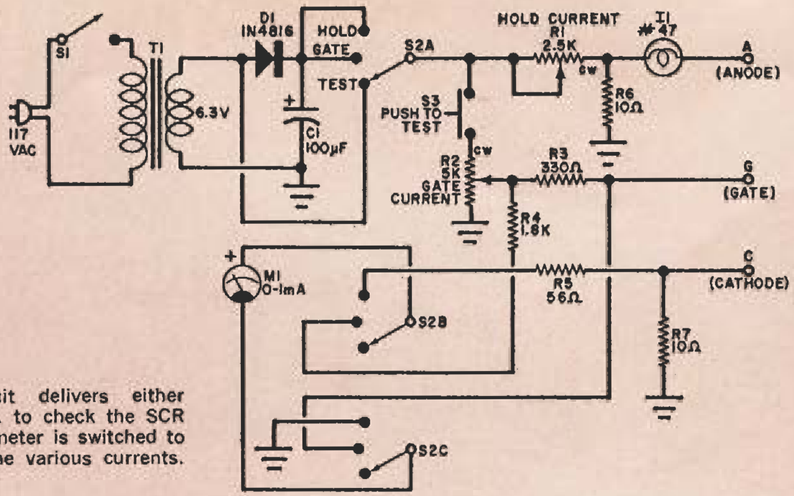

Test circuit delivers either a.c. or d.c. to check the SCR while the meter is switched to measure the various currents.

## PARTS LIST

*C1—100-µF, 15-volt electrolytic capacitor*
*D1—1-amp, 50-volt diode rectifier (1N4816 or similar)*
*I1—6.3-volt, 150-mA pilot lamp (#47 or similar)*
*M1—1-mA d.c. ammeter (Emico Model 13, substitution requires change in R4 and R5)*
*R1—2500-ohm, 2-watt potentiometer*
*R2—5000-ohm, 2-watt potentiometer*
*R3—330-ohm, ½-watt resistor*
*R4—1800-ohm, ½-watt resistor*
*R5—56-ohm, ½-watt resistor*
*R6, R7—10-ohm, ½-watt resistor*
*S1—S.p.s.t. switch*
*S2—4-pole, 3-position rotary switch (Mallory 3243J or similar)*
*S3—Momentary pushbutton switch (Switchcraft 103 or similar)*
*T1—Filament transformer, secondary 6.3 volts*
*Misc.—Line cord; lamp holder; screws; knobs; plastic case (Harry Davies 240 or similar) with metal cover; short lengths of thin insulated wire; three small, insulated alligator clips.*

case, while the various controls, switches, meter and pilot light assembly are mounted and wired point-to-point on the metal front cover. The front-view photograph shows the panel layout used, although any other arrangement will do. The three SCR connectors (C, G, and A) are brought out through three small holes using lengths of insulated wire terminated in small insulated alligator clips. Make a small knot in each wire, just inside the cover, to act as a strain relief. Because of the many different lead configurations that are used on SCR's, a socket is not prescribed.

## HOW IT WORKS

With switch *S2* in the TEST position, 60-Hz power is applied to the anode-cathode circuit of the SCR, in series with lamp *I1*. The GATE CURRENT control, *R2*, is adjusted clockwise to increase the applied gate current until the SCR fires. This is indicated by the turning on of *I1*. Returning *R2* to its counterclockwise position reduces the applied gate current to the point where the SCR will not conduct and *I1* will not come on. This test merely indicates whether or not the SCR is good or bad.

The GATE position of *S2* is used to determine the minimum gate current required to fire the SCR. The controlled gate supply is increased slowly until the SCR fires. The amount of current required is indicated on the meter and should be read just before the SCR fires.

To measure the holding current, the meter is connected in the cathode circuit of the SCR. The correct current measurement is obtained by firing the SCR, removing the gate voltage and then increasing the resistance in series with the anode until the SCR cuts off.

Take care when drilling the transformer mounting holes in the plastic case since the plastic chips very easily. Countersink the two holes on the outside of the case and mount the transformer with flat-head screws so that the finished unit can be used in either a vertical or horizontal position. Note that a three-pole, three-position switch is used for *S2*, but a four-pole switch is called for in the Parts List. The connectors on the spare pole are used to mount the resistors.

**Operation.** Place *S2* in the TEST position, rotate GATE CURRENT control *R2* full counterclockwise, and set HOLD

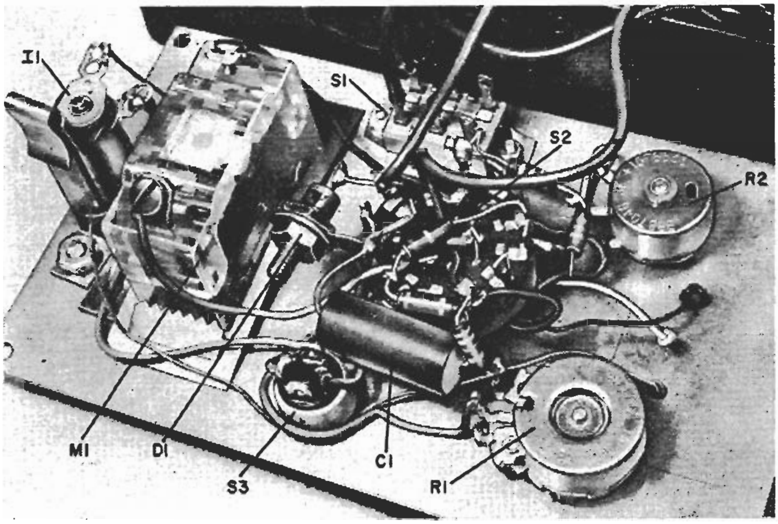

The entire tester can be mounted on the front panel of the chassis selected. Connections to the external SCR are made via three color-coded insulated test leads.

CURRENT control *R1* full clockwise. Connect the C lead to the cathode of the SCR, the G lead to the gate, and the A lead to the anode. Turn on the power to the tester. Depress the PUSH TO TEST switch, *S3,* and slowly rotate the GATE CURRENT control clockwise until lamp *I1* comes on. When you release the PUSH TO TEST button, the lamp should go off. If the lamp does not light, or if it remains lit at all times, the SCR is defective.

To determine the SCR's minimum gate firing current, place *S2* in the GATE position. Set the GATE CURRENT control full counterclockwise and the HOLD CURRENT control full clockwise. Depress the PUSH TO TEST button and slowly rotate the GATE CURRENT control clockwise until the lamp comes on. The correct gate current can be read on the meter *just before* the lamp comes on. The current will drop back when the SCR fires and the lamp lights. In the circuit shown, the meter indicates 10 milliamperes full scale. If you miss the meter reading when doing this test, place *S2* in the TEST position and then return it to the GATE position, and repeat the test.

The third test measures the SCR's minimum anode holding current. Place *S2* in the HOLD position, GATE CURRENT control full counterclockwise, and the HOLD CURRENT control full clockwise. Depress the PUSH TO TEST switch and advance the GATE CURRENT control slowly until the lamp lights. Release the PUSH TO TEST switch and slowly rotate the HOLD CURRENT control counterclockwise until the meter indication drops to zero. The current reading *just before* the current drops is the correct holding current for the SCR. This current can be checked by advancing the HOLD CURRENT control full clockwise. Then if the meter returns to full scale, the holding current has not been reached. If the meter still indicates zero, the test is valid. Maximum on the meter scale for this test is 100 milliamperes. -30-

# Build the UJT TESTER

## MAKES IT EASY TO CHECK OUT UNIJUNCTION TRANSISTORS

BY J. W. CUCCIA

A CONVENTIONAL transistor tester cannot be used to check a unijunction transistor (UJT). However, these important semiconductors are becoming increasingly popular and you are probably using—or planning to use—one in an upcoming project or experiment. If so, you'll want to have one of these UJT Testers to help you in your work.

A unijunction transistor is basically a small length of silicon with electrical connections (called base-1 and base-2) at each end. The resistance between the connections is usually 5000 ohms or more. In normal operation, base-1 is grounded and a positive potential ($V_{bb}$) is applied to base-2. At a certain point between the two bases, a diode junction is diffused into the silicon. This junction is called the emitter. A fraction of $V_{bb}$ appears at the emitter—the exact amount being determined by the voltage-divider network formed by the resistance of the silicon. The resistance ratio is designated $\eta$ (*eta*, or intrinsic standoff ratio).

Now consider what happens when a voltage $V_E$ is applied to the emitter. If $V_E$ is less than $\eta V_{bb}$, the emitter is reverse biased and only a small leakage current flows. If $V_E$ is greater than $\eta V_{bb}$, the emitter is forward biased and emitter current flows. The result is a decrease

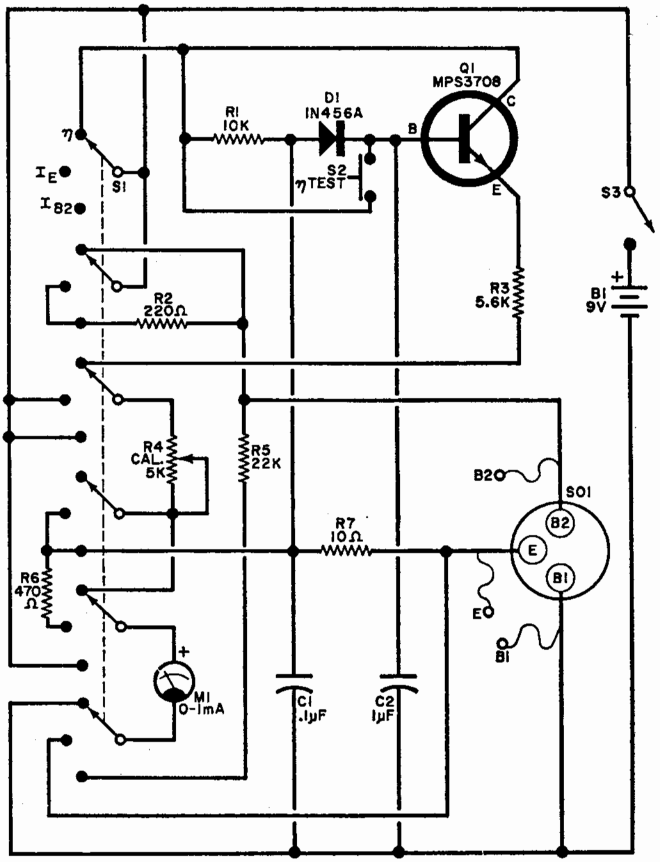

Fig. 1. UJT being tested is heart of a relaxation oscillator circuit. Parameters of the circuit are changed by switch S1 for making the various tests. Leads for testing transistors that don't fit SO1 are soldered to socket and brought out through a grommet in the front panel.

in the resistance between the emitter and base-1 so that, as the emitter current increases, the emitter voltage decreases and a negative-resistance characteristic is obtained. When the emitter voltage drops below $\eta V_{bb}$, the current flow stops. Thus, a UJT can be thought of as a voltage-sensitive switch, unlike the linear amplification function of a conventional junction transistor.

The UJT Tester measures the two important characteristics of a UJT: $\eta$ and the inter-base modulated current, $I_{B2}$. The latter is a measure of the effective gain between base-2 and the emitter.

## PARTS LIST

*B1—9-volt battery (Burgess 2N6 or similar)*
*C1—0.1-µF, 25-volt capacitor*
*C2—1-µF, 25-volt, non-polarized capacitor*
*D1—1N456A silicon diode (or similar)*
*M1—0-1-mA meter (Emico 52F6023 or similar)*
*Q1—MPS 3708 transistor*
*R1—10,000-ohm*
*R2—220-ohm*
*R3—5600-ohm*
*R5—22,000-ohm*
*R6—470-ohm*
*R7—10-ohm*
*All resistors ½-watt*
*R4—5000-ohm potentiometer*
*S1—6-pole, 3-position, non-shorting rotary switch (Mallory 3263J or similar)*
*S2—Single-pole pushbutton switch, normally open (Switchcraft 101 or similar)*
*S3—S.p.s.t. switch*
*Misc.—Cabinet (Bud CU728B or similar), battery clip, battery holder, color-coded test leads with attached insulated small alligator clips, mounting hardware, handle (optional), etc.*

**Construction.** The circuit for the UJT Tester is shown in Fig. 1. Choose a suitable mounting cabinet and mount all of the operating controls, including the meter and transistor socket on the front panel. The author's layout is shown in the photos. The battery can be mounted on the rear of the cabinet with a battery clip.

Wire the circuit point-to-point between the components. A small hole, protected

## HOW IT WORKS

Schematics of the three modes of operation of the UJT Tester are shown here. In each case, the UJT is used as a relaxation oscillator and the circuit parameters and meter location are changed by *S1* to measure the different characteristics.

With *S1* in the $\eta$ position, the frequency of the oscillator is determined by *R1* and *C1*. The intrinsic standoff ratio ($\eta$) is then measured with a peak voltage detector made up of *D1*, *Q1* and the meter circuit. Transistor *Q1* is an emitter follower used to keep the meter from loading the diode. Resistor *R3* and potentiometer *R4* are used to calibrate the meter.

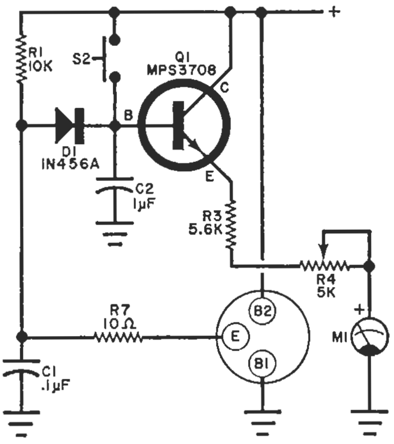

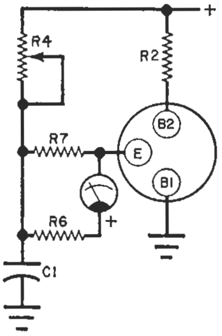

The emitter current, $I_E$, is adjusted by altering the relaxation oscillator so that resistor *R2* is in series with base-2 and the meter is in the emitter circuit of the UJT. The resistance of *R4* is then varied to give a meter reading of 50 mA for $I_E$.

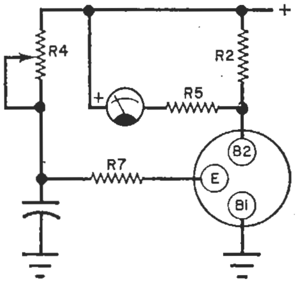

To measure $I_{B2}$ the meter is placed in the base-2 circuit. In this arrangement, the meter has a full-scale value of 100 mA.

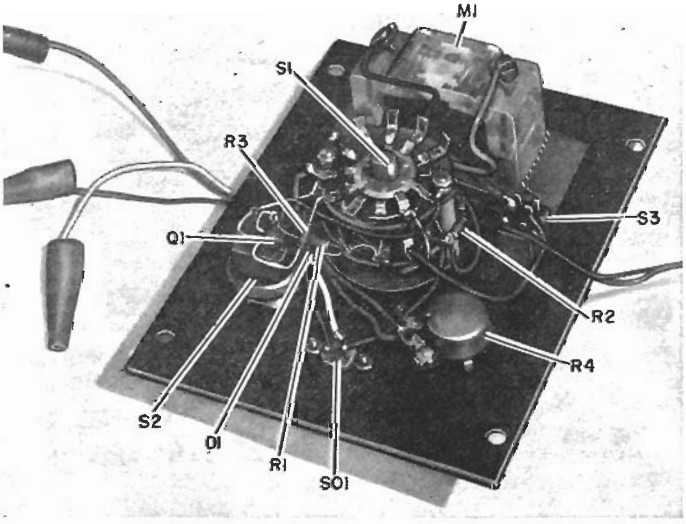

Rear view of front panel shows how all components are mounted and wired from point to point. Battery, mounted on rear panel, is connected to leads at right.

by a rubber grommet, is used for the three test leads designated *E, B1,* and *B2* in the schematic. These leads are used to test a transistor that won't fit in the socket. Color code the leads for identification. (The author used red for *B2*, white for *E*, and blue for *B1*.) When the wiring is complete, check it carefully, connect the battery and close the case.

**Operation.** The on-off switch (*S2*) must

(*Continued on page* 92)

## UJT TESTER

(*Continued from page* 35)

always be in the OFF position when you are not making tests. Plug the UJT into the test socket or connect it to the test leads, being sure that you have the correct connections.

Place *S1* in the $\eta$ position and turn on the power. The meter should indicate slightly up-scale, if the UJT is good. If the meter shows no indication, either the UJT is bad or the leads have not been correctly attached. To measure $\eta$, depress the CALIBRATE switch (*S2*) and adjust *R4* (CALIBRATE CONTROL) until the meter indicates full scale. Release *S2* and read the value of $\eta$ on the meter (full scale $= 1$).

To measure $I_{B2}$, set *S1* on $I_E$ and adjust *R4* until the meter indicates mid-scale, which is 50 mA. Now place *S1* in the $I_{B2}$ position and read the base-2 current on the meter scale (full scale = 100 mA). Do not operate the UJT under these conditions for extended periods of time since it can be damaged with this amount of current. –30–

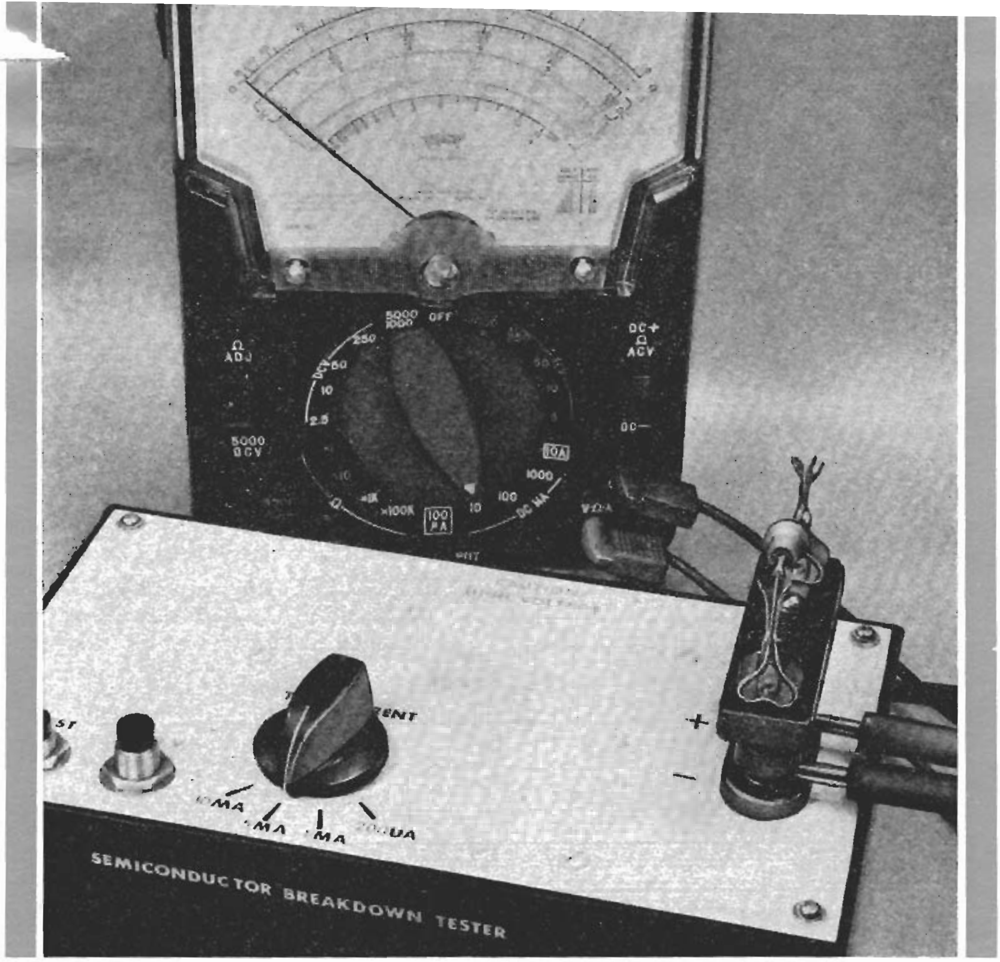

# SEMICONDUCTOR BREAKDOWN TESTER

## CHECKING PIV WITHOUT DAMAGE

BY JOHN DEHAVEN

If you are a typical electronics experimenter, you most likely have a collection of semiconductors of questionable characteristics—some of them even unmarked. Of course you can check diodes for front-to-back ratios, opens, and shorts with an ohmmeter; and you can check transistors for gain and leakage if you have a transistor checker. But how do you check them for the important breakdown voltage? If you don't know that a device will withstand the voltage of the circuit in which you want to use it, you might as well forget the whole thing.

You can find the answer easily if you build the breakdown tester described in this article. The tester will check all diodes and transistors up to 300 volts (except MOS field-effect transistors) and the only other equipment you need is a voltmeter. Many other devices may be tested also.

No semiconductor junction is destroyed just by "breaking it down." Destruction of a junction in a circuit is usually caused by high current or by heating due to high power dissipation. In this tester, sufficient voltage is applied to the device to break it down, but the current (and, therefore, power dissipation) is limited to protect the device. Protection is also insured by the fact that many devices will withstand

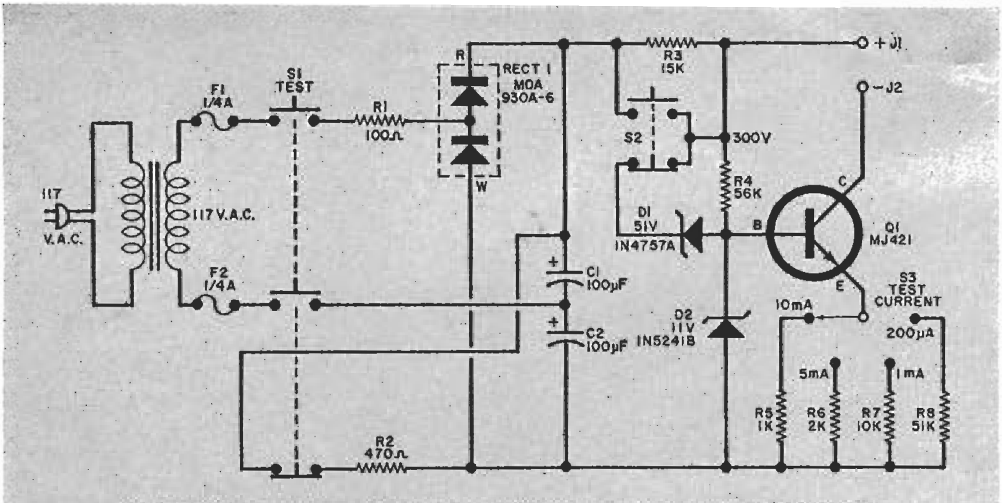

Fig. 1. Operating voltage is applied only when S1 is depressed. Constant-current source (Q1) limits current flow through the semiconductor to a safe value.

### PARTS LIST

*C1,C2—100-µF, 200-volt electrolytic capacitor*
*D1—1N4757A, 51-volt zener diode*
*D2—1N5241B, 11-volt zener diode*
*F1,F2—¼-ampere, 3AG fuse with dual holder*
*J1,J2—Dual red/black universal binding post (H.H. Smith 269RF or similar)*
*Q1—Transistor (Motorola MJ421) with TO-5 heat sink (Wakefield 150)*
*R1—100-ohm, 1-watt resistor*
*R2—470-ohm, 1-watt resistor*
*R3—15,000-ohm 5-watt resistor (Ohmite 200-5¼ or similar)*
*R4—56,000-ohm, 2-watt resistor*
*R5—1000-ohm, 5% resistor*
*R6—2000-ohm, 5% resistor*
*R7—10,000-ohm, 5% resistor*
*R8—51,000-ohm, 5% resistor*
*RECT1—400-volt voltage doubler (Motorola MDA930A-6)*
*S1—3-pole, d.t. pushbutton switch (Switchcraft 1009 or 4009)*
*S2—S.p.d.t. pushbutton switch (Switchcraft 1003 or 4003)*
*S3—S.p. 4-position rotary switch (Acro 3215J or similar)*
*Misc.—7¾" x 4 7/16" x 2⅜" plastic utility box with metal cover, line cord, terminal strips, capacitor clips, test leads, mounting hardware, test clip adapter (Grayhill 2-2), etc.*

five to ten times their continuous power dissipation rating for the brief time that it takes to press a button and read a meter. The test method used here is similar in principle to that used by industry to measure these parameters.

**Construction.** The circuit of the breakdown tester is shown in Fig. 1. Layout is not important and any type of enclosure may be used. You could even put it in an existing transistor tester if there is room. The prototype shown in the photos was built in a 7¾″ × 4 7/16″ × 2⅜″ bakelite box with an aluminum panel for the controls. Interior layout of the prototype is shown in Fig. 2. Terminal strip construction was used because of the small number of components.

Transistor *Q1* should have thermal grease between the heat sink and the transistor and the sink should be mounted so that it is electrically isolated from the chassis. You can use a spacer cut from an old circuit board for the insulation. The dual binding post (*J1* and *J2*) called for in the Parts List is fully insulated when properly mounted.

Identify the red terminal as positive (+) and the black terminal negative (−). If individual binding posts are used, be sure they are on ¾″ centers to match the optional test clip adapter. No portion of the circuit should be in contact electrically with the case. An isolation transformer (*T1*) is used as an additional safety measure.

A pair of leads with banana plugs on one end and insulated alligator clips on the other may be used for test connections or you can assemble the test clip adapter shown in the photos. The adapter is very valuable for sorting diodes or transistors with long leads.

## TABLE I—POWER IN TEST DEVICE

| Voltage range | Test current | Power |
|---|---|---|
| 0-50 | 200 $\mu$A | 0-10 mW |
| | 1 mA | 0-50 mW |
| | 5 mA | 0-250 mW |
| | 10 mA | 0-500 mW |
| 0-300 | 200 $\mu$A | 0-60 mW |
| | 1 mA | 0-300 mW |
| | 5 mA | 0-1.5 W |
| | 10 mA | 0-3.0 W |

The cost of the tester can be reduced by using devices with 10% tolerances for *D1*, *D2* and *R5* through *R8*, although current values will be slightly off. To select 10% devices for *D1* and *D2*, delete the "A" and "B" suffixes from the type numbers given in the Parts List. It is not advisable to use a substitute for *Q1*, although the Motorola MJE2252 (at a higher price) will work and the MJE340 can be tried. Both of these devices require different heat sinks, however. Any pair of silicon rectifiers rated at 400 volts or more may be used in place of *RECT1*.

**Checkout.** Supply a.c. power to the tester and connect a d.c. voltmeter (minimum 20,000 ohms per volt on the 300-volt scale) to the test terminals. When the TEST button is depressed, the meter should indicate about 50 volts. This is the maximum voltage applied to a device with only the TEST button depressed. It is determined by zener diode *D1* and should not vary throughout the life of the tester.

When the TEST and 300 V buttons are depressed simultaneously, the observed voltage should be around 300 volts, the actual value depending on the supply-line voltage. Current values may be verified by connecting a milliammeter to the test terminals. Read the currents produced for the various positions of the TEST CURRENT switch. They should be very close to nominal if the specified components have been used. The values may be trimmed, if necessary, by adjusting the values of resistors *R5* through *R8*. Minor deviations will be of little consequence in the operation of the tester.

**Operation.** It is convenient to attach the voltmeter probes under the nuts of the output terminals, leaving the banana jacks free for the test clip adapter or test leads. A suitable test current is selected on *S3* (see Tables I and II) and then, *after* the operator has removed his hands from the device being tested and the test connectors, the TEST button is depressed.

If the junction being tested is inadvertantly connected "backwards" so that the junction is forward biased, a very low voltage will be indicated. This technique can be used to determine the polarity of an unknown device and to measure forward voltage drops at various currents.

**Precautions.** The tester will produce 300 volts at the test terminals; therefore do not touch the device under test or anything connected to it with either pushbutton depressed. Do not use a metal-encased voltmeter having its common lead connected to the case. The case of

## TABLE II—TEST CONDITIONS

| DEVICE | CONDITION |
|---|---|
| **Diodes** | |
| Silicon, glass or epoxy, top-hats, etc. to 1A | 200 $\mu$A |
| Silicon, power | 5 mA |
| Germanium, most junction types | 200 $\mu$A |
| Germanium, point contact | 1 mA (50V only) |
| Zener, up to 1W, less than 50V | 5 mA* |
| Zener, up to 1W, over 50V | 1 mA** |
| Zener, over 1W | 10 mA** |
| 4-layer | 200 $\mu$A |
| 3-layer trigger, under 50V | 5 mA |
| 3-layer trigger, over 50V | 1 mA |
| **Transistors** | |
| Silicon, small signal, under 1W | 200 $\mu$A |
| Silicon, power, 1 to 10W | 1 mA |
| Silicon, power, over 10W | 5 mA |
| Germanium, small signal, planar | 1 mA |
| Germanium, small signal, alloy or unknown | 1 mA (50V only) |
| Germanium, power | 10 mA |
| Junction FET | 200 $\mu$A |
| **Thyristors** | |
| SCR, gate breakdown | 200 $\mu$A |
| SCR, forward and reverse blocking | 1 mA |
| Triac, forward and reverse blocking | 10 mA |
| 4-layer diode | 200 $\mu$A |

*To 10 mA for $Z_z$

**To 5 mA for $Z_z$

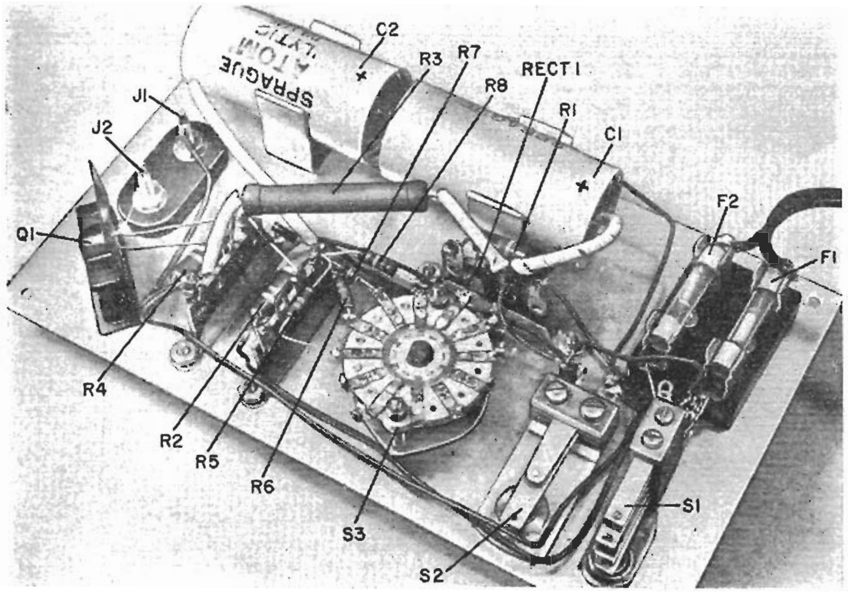

Fig. 2. Other than the power-line isolation transformer, all components are mounted on front panel. The transistor is mounted on a heat sink which is insulated from chassis.

the voltmeter could become "hot" when the TEST button is depressed. Do not "linger" on either pushbutton; develop the habit of depressing the buttons only long enough to read the meter. Although most devices will withstand the output of the tester for prolonged periods, some of them may overheat. Be careful to use an appropriate current and voltage range for the device you are testing; currents larger than necessary only increase the chances of overheating (see Table II).

**Testing Diodes and Rectifiers.** In general, peak inverse voltage (PIV) ratings of silicon diodes and rectifiers with ratings up to 1 ampere may be tested using the 200-$\mu$A range. Rectifiers with high ratings (those with a mounting stud or other provision for cooling) should be tested on the 1-mA range. Germanium diodes may often be tested on the 200-$\mu$A range, up to 300 volts. Some may have excessive leakage (particularly small point-contact diodes of the 1N34 type) and require use of the 1-mA range, up to 50 volts.

*Zener diodes.* Zener breakdown voltage ($V_z$) should be tested with the 5-mA range for diodes of 1 watt or less, and less than 50 volts. Small zeners of higher voltage ratings should be tested on the 1-mA range. Power zeners should be tested on the 10-mA range. The regulation quality of a zener may be estimated by changing the current among the above selections. A high-quality zener exhibits very little change in voltage for different currents. This quality of a zener is indicated by $Z_z$, the zener impedance which is the ratio of the change in voltage to the change in current. The smaller the zener impedance, the better the zener. If a voltmeter of high resolution is used, $Z_z$ can be measured by changing the current and observing the resultant change in voltage.

The zener diode characteristic may often be found in conventional diodes and rectifiers. The primary difference is that the breakdown voltage of the zener is closely specified ($V_z$ is essentially the same as *PIV*). Any diode may be used as a zener at its breakdown voltage if its $Z_z$ is sufficiently low. Base-emitter junctions of transistors often make excellent low-power zeners when reverse biased.

*Transistors.* The "worst case" test for bipolar transistors is $BV_{CEO}$ (breakdown voltage, collector to emitter, with base

## HOW IT WORKS

Transistor *Q1*, which has a minimum $BV_{CEO}$ of 325 volts, zener diode *D2*, and an emitter current resistor selected by *S3* form a constant-current source that attempts to drive a fixed current through any device connected between *J1* and *J2*. A drop of about 10 volts is provided across the emitter resistor by *D2* and the $V_{BE}$ drop of *Q1*. This fixes the emitter current at a predetermined value: and if $h_{FE}$ is large and leakage is small, the collector current is fixed at a value only slightly less than that of the emitter.

Power is supplied through a simple line-operated voltage doubler consisting of *T1*, *RECT1*, *C1*, and *C2*. The d.c. output varies slightly with line voltage, but it can be expected to be close to 300 volts. Switch *S1* is a momentary pushbutton switch which breaks both sides of the line for safety reasons when not depressed. This switch automatically discharges the high-voltage supply through *R2* when it is released. Resistor *R1* limits the inrush currents to safe levels when *S1* is first depressed.

The combination of *R3* and *D1* limits the available output voltage to about 50 volts unless the 300 V pushbutton, *S2*, is depressed. When *S2* is depressed, the full 300 volts from the supply is applied to the test connectors.

When testing semiconductor breakdown, the power dissipated in the device under test is a paramount consideration. In this tester, the power is under control at all times, being the product of the current and the voltage produced by the tester. The amounts of power developed for the various switch settings are given in Table I. The amount of time power is applied to the device under test is low, which provides the necessary margin of safety.

While the lowest possible current is desirable to minimize power dissipation, the lowest usable current must be higher than the leakage current of the device under test. The four values of current were selected to provide safe, reliable testing of the widest variety of device without great expense.

The lower current limit of 200 μA was chosen for compatibility with a 20,000-ohms-per-volt meter. Such a meter draws 50 μA of current at full-scale deflection. This reduces the actual test current through the device under test to 150 μA. A TVM or other high-input-resistance voltmeter with 10 megohms input impedance will draw only 5 μA on the 50-volt range and 30 μA on the 300-volt range at full deflection.

open), which is measured with normal operating polarity applied to the transistor (positive collector and negative emitter for *npn*, vice versa for *pnp*) and with the base disconnected.

To be exact, the actual parameter measured here is $V_{CEO}$ (sustained) which is not very different from $BV_{CEO}$ unless the transistor has an extreme "hook" characteristic. Some devices have a negative-resistance characteristic after breakdown so that the sustaining voltage drop in the $V_{CEO}$ mode is somewhat less than the actual breakdown voltage. The tester will indicate the sustaining voltage. If it is important to measure $BV_{CEO}$ for a device with a substantial hook, it may be done using the technique prescribed for breakover voltage tests on thyristors. You are always "safe" in an application,

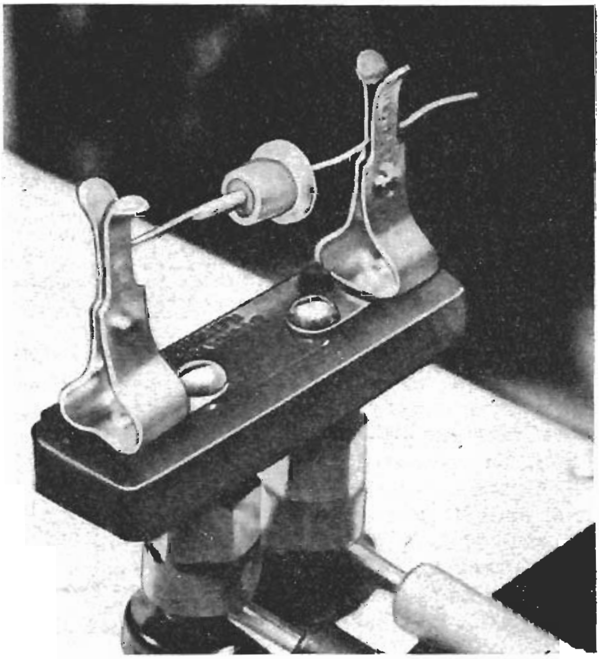

This test jig can be made from scrap plastic, a couple of spring clips, and a pair of banana plugs. In this way, semiconductors with long leads may be tested. This approach is also useful when a large number of devices need to be individually tested or sorted.

however, if the sustaining voltage is not exceeded.

Occasionally, an application may require measurement of other breakdown voltages, such as $BV_{EBO}$ (emitter to base in reverse direction, collector open), $BV_{CBO}$ (collector to base, emitter open), $BV_{CES}$ (collector to emitter, base shorted to emitter), and $BV_{CER}$ (collector to emitter, base connected to emitter through a resistor). However, if the applicability of any of these characteristics is in doubt, use the $BV_{CEO}$ value to be on the safe side.

All small-signal silicon transistors can be tested with the 200-$\mu$A range. Silicon power devices should be tested with the 5-mA range. Germanium transistors have higher leakage, so small-signal germanium units should be tested on the 1-mA range. It is not advisable to use the 300-volt range for unidentifiable germanium transistors (especially if the package is obsolete) because they may be alloy units with low power dissipation capabilities. Germanium power devices may be tested on the 10-mA scale. Occasionally, you may encounter a germanium power device whose leakage $I_{CEO}$ is greater than 10 mA so $BV_{CEO}$ cannot be measured. The best, and safest, alternative is to measure $BV_{CES}$ or $BV_{CBO}$ and derate 30%.

Junction field-effect transistors may be tested for $BV_{GSS}$ (gate to source, drain shorted to source), the worst-case gate breakdown test for this device, using the 200-$\mu$A range. For FET's, $BV_{DSX}$ (drain to source, with gate biased to cut off) may be measured using an external battery or power supply to provide the gate bias. The 200-$\mu$A range is suitable for this test. For MOSFET's, $BV_{DSX}$ can be measured using the same procedure. Handle these devices with care. *Do not* test MOSFET's for gate breakdown—the gate must never be broken down, no matter how small the current.

*Thyristors (SCR's, 4-layer diodes, and triacs).* The gate-to-cathode junction of an SCR may be tested directly, using the 200-$\mu$A range. The reverse blocking voltage of an SCR or a 4-layer diode may be measured directly using the 1-mA and 200-$\mu$A ranges, respectively. Forward blocking voltage (or breakover voltage) of a thyristor may be measured if a variable power-line transformer is part of your bench equipment. Connect the tester to the variable transformer and set the latter for zero output. Connect the thyristor and meter to the test terminals (cathode to negative, anode to positive). Depress both the TEST and 300 V pushbuttons and slowly increase the variable transformer voltage. When the breakover voltage is reached, the indication on the meter will drop suddenly to a very low value. Release the pushbuttons immediately. If you did not notice the exact breakover voltage, you can read it again after first disconnecting the thyristor. Use the 200-$\mu$A range for 4-layer diodes, 1-mA for SCR's and 10-mA for triacs in this test. Triacs must be tested in both directions by this method.

**Testing Other Devices.** The sustaining voltage of a 3-layer trigger diode or other "hook" device may be measured directly using the 5-mA scale for devices under 50 volts and 1 mA for devices over 50 volts. Breakover voltage can be measured by the variable-transformer method used for thyristor tests. The voltage will decrease only a few volts at breakover, going down to the sustaining value.

Gas diodes, from voltage regulator tubes to neon bulbs can be tested in the same manner as "hook" devices. Select a current close to operating conditions and use the 300-volt range. —30—

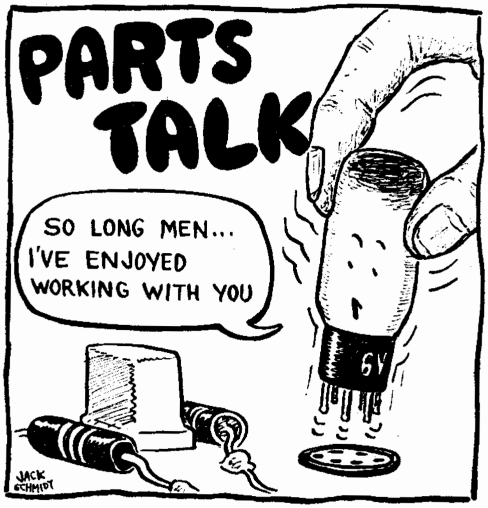

## THYRISTOR TESTER UPDATED

After having built the "Thyristor Tester" (July 1973), I realized that it omitted a sometimes very critical test for SCR's. It is often necessary to gate an SCR with a dc voltage and remove the gate. Many SCR's that check good in all other respects will not continue to function when the gate is removed.

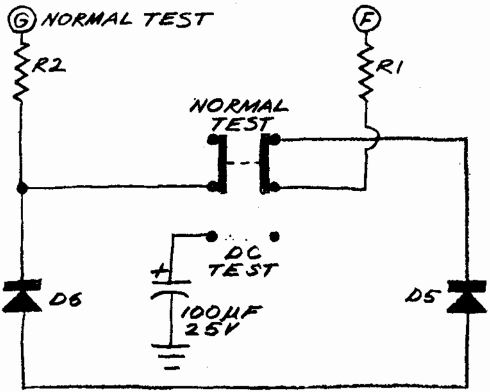

ADD SWITCH & CAPACITOR

To update my project, I installed a 100-μF capacitor into the positive gate. This requires switching out the negative-gate indicating LED, else the capacitors will charge and turn on both LED's.

Ronald B. Stear
Lake Charles, La.

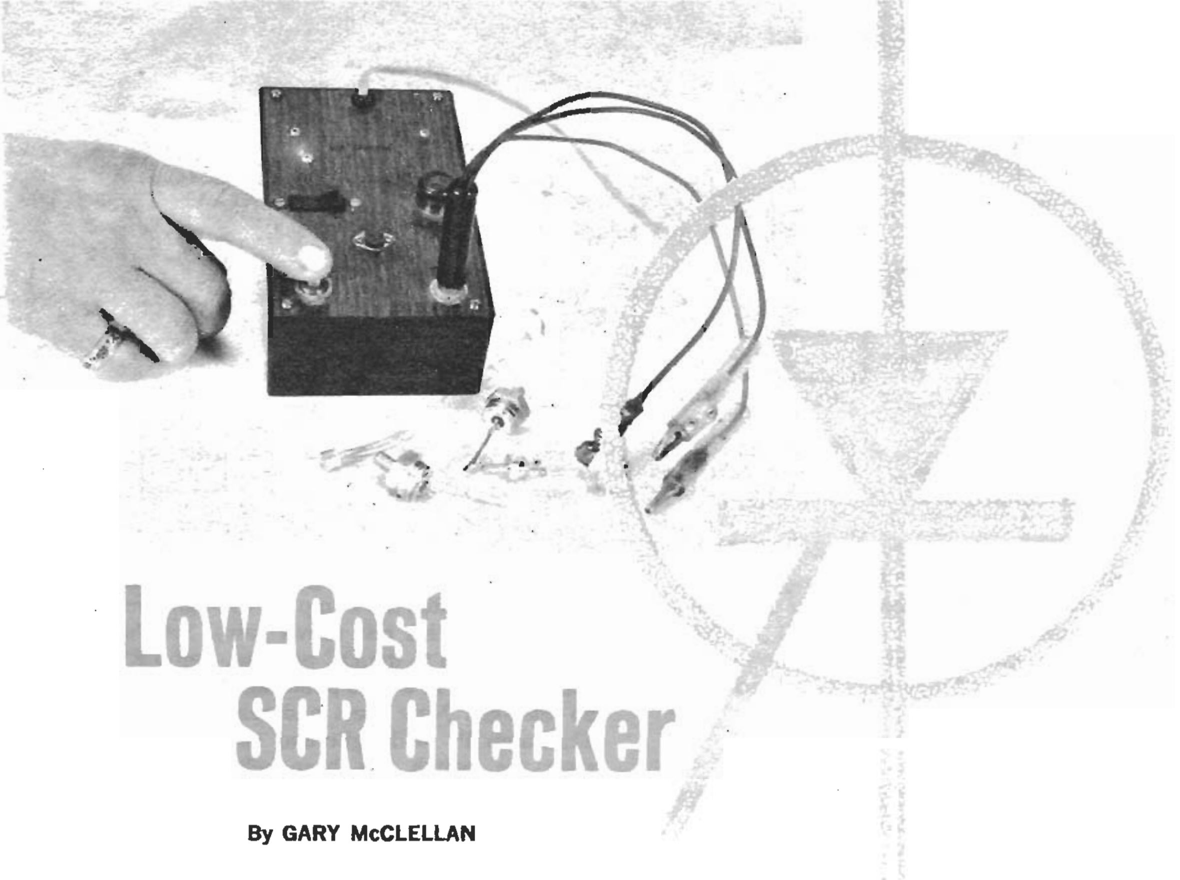

# Low-Cost SCR Checker

By GARY McCLELLAN

SCRs have become quite common around the home and shop. Yet it's surprising how few people who work with them own a suitable checker. Although low-cost commercially-made checkers are still not available, you can have a checker of your own for about $5.

Our SCR checker uses the well-known go no-go or good-bad principle of operation. Since SCRs generally do not become weak, this type of test works well. Also, the go no-go principle simplifies the test procedure. In fact, you can run a complete test on an SCR in seconds.

**How it Works.** Our checker puts the SCR to be tested in a circuit consisting of a power supply (C1, SR1 and T1) and a load, P1. A triggering circuit, consisting of R1 and S2 fires (turns on) the SCR to determine if it works. In this circuit P1 generally shows the leakage of the SCR, but when switch S2 is pushed, P1 indicates the SCR's gain.

Our checker was built in a 6¼ x 3¾ x 2-in. utility case, but you may build it into anything you like. Parts (and wiring) placement is not critical. All of the parts in our model were mounted on the cover of the case.

**Construction.** Start off by laying out the parts as shown in the photo on the next page. When everything is positioned to your satisfaction, mark the mounting holes and drill. You might want to apply a piece of wood-grained plastic to the panel as we did. This stuff really improves the appearance.

Start the wiring by connecting the AC line cord to the primary (black leads) of T1. Next, connect C1 and SR1 to T1's secondary (green leads). Be sure of the polarity of these two components when you install them. Now, wire rocker switch S1. From S1 run a wire to S2 and P1. Connect a wire from the other side of P1 to the anode lug on transistor socket SO1 and from there connect another wire to J1. Next, connect R1 between S2 and the gate lug on SO1. Also run a wire from the gate lug to J1. Finish up the wiring by grounding the cathode lug on the transistor socket and by grounding J1. When finished, check over your wiring, and if all's well, button 'er up. At this point make up a set of test leads—alligator clips on one end, two-circuit phone plug on the other to check

# SCR Checker

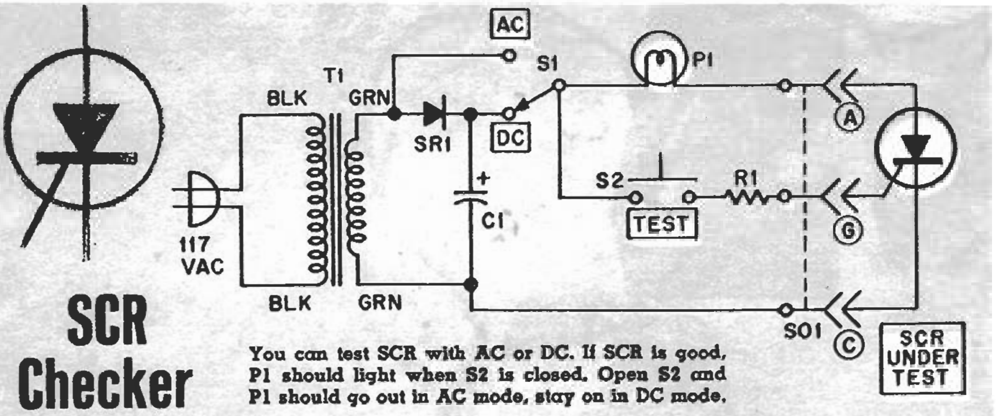

**You can test SCR with AC or DC. If SCR is good, P1 should light when S2 is closed. Open S2 and P1 should go out in AC mode, stay on in DC mode.**

SCRs that don't fit in SO1.

**Operation.** Plug the checker into the AC line and set AC-DC switch S1 to the AC position. Obtain a good SCR, connect it to the checker and note P1. For a good SCR P1 should not be lit (no leakage). Now press and release test switch S2. Lamp P1 will light and then go out (this test shows gain). Set the AC-DC switch to the DC position. Lamp P1 should not be lit at this point (again showing no leakage). Now press and release switch S2. Lamp P1 will light and stay on even after the switch has been released. This verifies that the SCR is good.

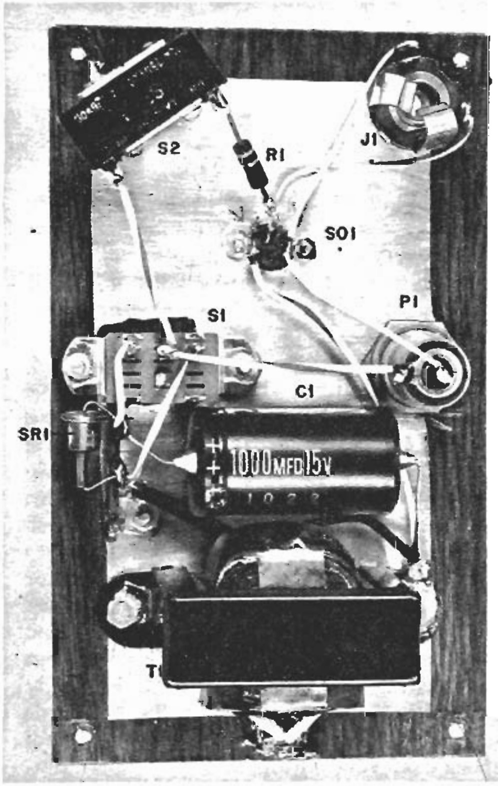

**Photo shows location of parts on our box's cover plate. Socket SO1 is for SCRs in TO-5 case. J1 accommodates plug with clip leads for other SCRs.**

You will find that other good SCRs will check out the same way. Any SCR that shows leakage, no gain or deviates from the above tests in any way should be considered bad. We've included a quick-check chart to simplify your testing. For convenience, cut it out and paste it on the back of your checker. ◆

**OPERATING PROCEDURE**

Plug checker in AC line. Plug SCR in SO1 or connect with clip leads plugged in jack J1.

| Set S1 | S2 open | S2 closed | S2 open |
|---|---|---|---|
| AC | P1 off | P1 on | P1 off |
| DC | P1 off | P1 on | P1 on |

**PARTS LIST**

C1—1,000 µf, 15 V electrolytic capacitor
J1—Two circuit phone jack
P1—No. 44 pilot lamp and socket
R1—47 ohm, ½ watt, 10% resistor
S1—SPDT rocker switch
S2—SPST pushbutton switch
SO1—transistor socket
SR1—Silicon rectifier; minimum ratings: 750 ma, 50 PIV
T1—Filament transformer: 6.3 V @ 1.2 A
Misc.—6¼ x 3¾ x 2-in. Mini utility case (Radio Shack 270-627), two-circuit phone plug, alligator clips

*If you built R-E's digital IC tester last month you must be ready to put it to work. Here's a detailed manual of operation*

# how to use

# R-E's IC Tester

by JACK CAZES

NOW THAT YOU'VE COMPLETED THE construction of your DIGI-DYNA-CHECK (**Radio-Electronics,** May 1972), let's see how it can be used for both in- and out-of-circuit testing of a wide variety of digital integrated circuits. By simulating actual operating conditions for the unit under test; the DIGI-DYNA-CHECK performs a functional check of an ic under truly dynamic conditions. Operating power is supplied (+5 volts at 1 amp, regulated), where necessary and logic levels are readily applied to the inputs of the IC under test. All input and output logic levels are monitored, *simultaneously,* with a bank of sixteen indicator lamps, a lighted lamp representing a **1** logic state. A lamp that is off is indicative of either a **0** logic state or an indeterminate condition that is possible when there is no connection at that test terminal.

Gates of all types can be put through their paces by checking the output levels that result from various combinations of input levels. Flip-flops, counters, and shift-registers are advanced through their various states either stepwise (manually), or continuously (automatically) at a frequency of approximately 50 kHz, a rate that can be easily observed with most commonly used oscilloscopes.

Before we get into the actual examples of test procedures that can be used with different types of digital IC's, let's take a closer look at the matrix switch to learn the how and why of its operation. Since it's the heart of the DIGI-DYNA-CHECK, a thorough understanding of its operation is necessary.

The matrix switch consists of twenty 10-position slide switches, each having, in addition to ten *common* positions, a neutral or "no connection" position. The first sixteen sliders are wired to correspondingly numbered pins of the DIP (Dual-Inline Plastic) test socket and to the inputs of sixteen lamp indicators. The remaining four sliders are brought out to four binding posts marked **W, X, Y,** and **Z.**

Each of the ten switch positions is wired, internally, in common, for all 20 switches, to the following functions. See Table I on next page.

Looking at Table I, we see that any number of the sixteen IC contacts as well as binding posts **W, X, Y,** and **Z** can be connected to any of the six internally available functions by merely moving their corresponding matrix sliders to the positions representing the desired functions. Since all switches have their identically numbered positions wired in-common (bussed together), two or more sliders resting on the same numbered positions will result in their IC terminals and/or binding posts being connected together. Sliders **W** through **Z** and positions **A** through **D** form a 4 × 4 matrix with their eight binding posts which, as we shall soon see, can be useful in connecting the test IC to the outside world—to a scope, external power supplies, resistors, capacitors, test leads, etc. When any or all of the sliders **W** through **Z** are in positions **1** through **6,** the corresponding internal functions are available for external use. This can come in handy when checking external circuitry. Note that when sliders **1** through **16** are in positions **A** through **D,** the corresponding monitor lamp inputs are automatically connected to the external binding posts.

Thus, for example, with slider **1** in position **A,** and test leads plugged into binding post **A** and ground, lamp **1** can be used as a logic level test probe for checking relative logic levels on PC boards at locations other than at IC terminals.

The numbering system for DIP integrated circuits is illustrated below. Very often, there is some sort of mark, such as a dot or a number 1 at pin 1. However, even in cases where there is none, pin 1 will always be at the notched end of the IC package as shown in Fig. 1. The remaining pins are numbered counting counterclockwise.

TABLE I

| POSITION | WIRED TO |
|---|---|
| 0 | No connection (Neutral) |
| 1 | Ground (to provide circuit common and logical **0**) |
| 2 | +5V, regulated (to provide circuit power and logical **1**) |
| 3 | STEP (via manual stepping button) |
| 4 | $\overline{\text{STEP}}$ (complement of position 3) |
| 5 | INT CLOCK (internally available 50 kHz square-wave generator) |
| 6 | $\overline{\text{INT CLOCK}}$ (complement of position 5) |
| 7 | Binding post **A** |
| 8 | Binding post **B** |
| 9 | Binding post **C** |
| 10 | Binding post **D** |

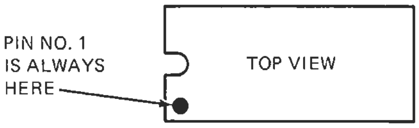

**FIG. 1—FINDING PIN 1 of a dual-inline-package (DIP) IC is easy. Just look for the notch in one end as shown here.**

## In-circuit testing

To test IC's in-circuit plug the in-circuit adapter cable into the test socket of the DIGI-DYNA-CHECK and connect the test clip at the other end of the cable to the IC to be checked. Be sure that the clip is properly oriented, i.e., with IC pin 1 connected to the 1 position of the clip. *A ground connection must* be made between the circuit being tested and the checker to provide a common reference point for the lamp monitors. This can be done either by moving the matrix slider corresponding to the ground lead of the IC under test (if this is known) to GND (position 1), or by connecting a clip lead between one of the ground posts in the checker and a ground or common point on the board containing the IC being tested.

If the IC being checked is operating under its own power supply, the logic levels existing at all of its terminals will be displayed by the indicators directly. If the circuit is not self-powered, power can be supplied from the DIGI-DYNA-CHECK to the $V_{cc}$ terminal of the IC via the matrix switch. Since up to 1 amp is available, the checker's power supply can "fire-up" a board containing many IC's; most digital IC's draw only a few milliamps each. However, current drain for most integrated circuits is dependent upon the output states and how often these states are changing—frequency. This happens because many gates draw extra current while changing state. Most manufacturers specify a maximum current consumption, and their literature should be consulted when in doubt.

One more word of **CAUTION** about using the internal +5 V supply for powering integrated circuits. The internal supply can only be used with IC's that are designed to operate at +5 volts. RTL (Resistor-Transistor Logic) circuits, for instance, require 3.6 volts and can be damaged if connected to 5 volts. RTL units operating from their own power supply or from an external power source of the proper voltage *can,* nevertheless, be checked with the DIGI-DYNA-CHECK via the lamp monitors because their logic threshold region is within the threshold region of the lamp-driver circuits. A knowledge of what the logic states at the IC's terminals should be for a given circuit may be obtained from the spec sheets for the units under test.

It is possible, during in-circuit testing, to connect any of the internally available functions to the circuit under test. Thus, you can connect the STEP or CLOCK function to the input of a shift register, or a counter, or a flip-flop, and carry it through its paces under control of the DIGI-DYNA-CHECK. You can connect up to four IC terminals simultaneously (via positions **A** through **D**), to external components, or to a scope for monitoring input and output relationships.

## Out-of-circuit testing

Out-of-circuit IC testing is performed much the same way as is done with a tube tester. The unit to be tested is plugged directly into the test socket, suitable input parameters are set (in the present case, via the matrix switch), and the result is read out on the front panel. In our case, we do not merely get a GOOD-?-BAD reading as with a tube tester, but rather, we obtain a lot more information about the IC under test. We are able to monitor all input and output logic levels *simultaneously,* and to compare them with each other and with expected levels based upon either a prior knowledge of the normal mode of operation of the logic type involved, (gate, counter, flip-flop, shift register, etc.) or from literature describing the specific unit being tested in which the normal input/output relationships are given. This latter type of data is generally contained in a TRUTH TABLE. This table indicates what the outputs should look like when certain combinations of input levels are present as well as what changes should occur when changes are made in the input levels.

Gates are the most basic logic systems. They can have, generally, either of two output states: a *high* or **1** level and a *low* or **0** level. The level or state that is present at the output of a particular gate depends upon the condition of the input(s) to the gate. The simplest gate, the INVERTER, or NOT gate always has an output state that is the opposite of its input (it has only one output and one input); a **1** at its input results in a **0** at its output, and vice versa.

Let's briefly look at truth tables for some of the more common types of logic building blocks (basic logic circuit types). The following table is a combined truth table for two-input NAND, AND, NOR, OR, and EXCLUSIVE-OR gates:

| INPUTS | | OUTPUTS | | | | |
|---|---|---|---|---|---|---|
| A | B | NAND | AND | OR | NOR | EXCL-OR |
| 0 | 0 | 1 | 0 | 0 | 1 | 0 |
| 0 | 1 | 1 | 0 | 1 | 0 | 1 |
| 1 | 0 | 1 | 0 | 1 | 0 | 1 |
| 1 | 1 | 0 | 1 | 1 | 0 | 0 |

Some generalizations may be made:

- For the first four types of gates, the output is at one condition for all input combinations *except one.*
- The NAND outputs are the opposite or inverse of the AND outputs for a given set of input conditions.
- The NOR outputs are the opposite or inverse of the OR outputs for a given set of input conditions.
- The EXCLUSIVE-OR gate is at one state if both inputs are identical and in the opposite state if the inputs are different. This property of the EXCLUSIVE-OR gate makes it useful as a digital comparator—for comparing two digital quantities or two digital states with each other.

Similar truth tables and general observations can be made for gates containing more than two inputs; the number of input combinations, of course, increases with the number of inputs involved.

Flip-flops represent the next most complex systems in digital circuitry. One widely used type is known as the J-K flip-flop. Unlike simple gates discussed above which have no memory, *flip-flops remain in a given state even after the input conditions that put it into that state have been removed.* Flip-flops often have two complementary outputs known as **Q** and **not-Q** (written $\overline{\mathbf{Q}}$). A J-K flip-flop has a "clock" input that serves as the trigger for the device. Output states are made to change by applying a pulse at the clock terminal. The states assumed by the **Q** and $\overline{\mathbf{Q}}$ outputs depend upon the levels present at the **J** and **K** inputs immediately preceeding the clock pulse as well as the states of the **Q** and $\overline{\mathbf{Q}}$ outputs at that time. The normal transitions are summarized in the next table.

| At time, *t* | | At time, *t* + 1 | |
|---|---|---|---|
| *J* | *K* | *Q* | *Q* |
| 0 | 0 | No change in state (maintains whatever state was present at time, t) | |
| 1 | 0 | 1 | 0 |
| 0 | 1 | 0 | 1 |
| 1 | 1 | Assumes the inverse of the output states that were present at time, *t* | |

NOTE: *t* is the time just before the "clock" pulse.
*t* + 1 is the time just following the "clock" pulse.

Now we're ready to apply what we've learned about the basic digital logic building blocks to checking digital IC's with the DIGI-DYNA-CHECK. We will select several IC's and carry them through their tests. The following table lists some of the more commonly used TTL (Transistor-Transistor Logic) integrated circuits with their internal terminal connections. We will look at several units listed in the table in order of increasing complexity, including an INVERTER, NAND, NAND with open-collector outputs, J-K flip-flop, and, finally, a **decade counter.**

TABLE II

| Pin No. | Set to | Remarks |
|---|---|---|
| 7 | GND | Power supply to the IC |
| 14 | +5 V | |
| 1, 2 | +5 V | Inputs to gate 1 at logical "1" |
| 4, 5 | +5 V | Inputs to gate 2 at logical "1" |
| 9, 10 | +5 V | Inputs to gate 3 at logical "1" |
| 12, 13 | +5 V | Inputs to gate 4 at logical "1" |

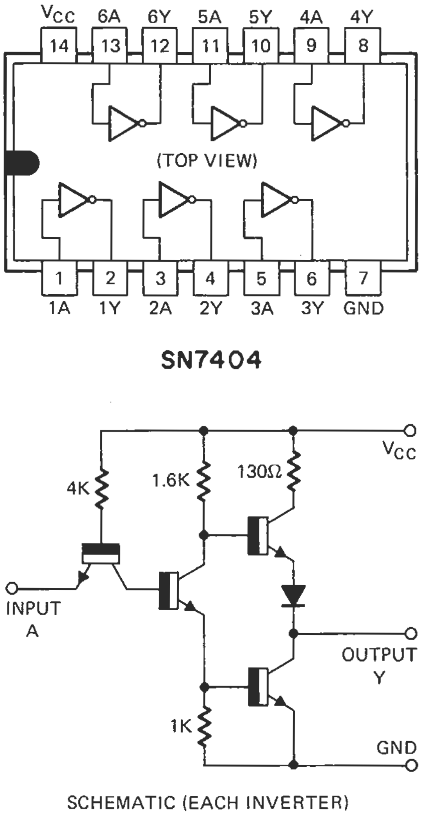

**FIG. 2—THE SN7404. Basing diagram is at the top. Schematic of each inverter is also shown. There are six in this IC.**

## SN7404: Hex inverter

This 14-pin IC contains six separate inverters with their inputs and outputs wired as shown in the table below and in Fig. 2. Plug it into the test socket making certain that it is properly oriented, with its pin **1** in hole **1** of the socket. Connect pin **7** to GND and pin **14** to +5 V by moving matrix sliders corresponding to these pins to the positions indicated. This will provide operating power to the IC. Now set the sliders for terminals **1, 3, 5, 9, 11,** and **13** (the six inputs) to +5 V (logical **1**) and note the conditions of the lamps. All lamps corresponding to terminals that are connected to +5 V should be on (**1**) whereas all lamps corresponding to output terminals (**2, 4, 6, 8, 10,** and **12**) should be off (**0**); we have already seen, in our discussion of gates, that INVERTER outputs should maintain states that are the inverse of their inputs. Try other combinations of input states and note that, if the IC is operating properly, all outputs will be the inverse of their respective inputs.

Thus, we can check the entire integrated circuit at the same time . . . all six inverters, simultaneously.

## SN7400: Quad two-input nand gates

This IC contains four two-input NAND gates on a single chip. Here again, we will perform tests on all parts of the unit simultaneously. Plug the circuit into the test socket, properly oriented. The truth table for each of the four NAND gates is as was given earlier. Make the initial settings as per Table II at the left.

All input lamps should be at logical **1** (on) and all outputs should be at logical **0** (see truth table for a NAND gate).

Now change the settings for the in-

| NUMBER/TYPE | PIN NUMBERS | | | | | | | | | | | | | | | | |
|---|---|---|---|---|---|---|---|---|---|---|---|---|---|---|---|---|---|
| | 1 | 2 | 3 | 4 | 5 | 6 | 7 | 8 | 9 | 10 | 11 | 12 | 13 | 14 | 15 | 16 | |
| SN7400-QUAD 2-IN NAND GATE | IN 1A | IN 1B | OUT 1 | IN 2A | IN 2B | OUT 2 | GND | OUT 3 | IN 3A | IN 3B | OUT 4 | IN 4A | IN 4B | VCC | —— | —— | SN7400 |
| SN7401-QUAD 2-IN NAND-O/C GATE | OUT 1 | IN 1A | IN 1B | OUT 2 | IN 2A | IN 2B | GND | IN 3A | IN 3B | OUT 3 | IN 4A | IN 4B | OUT 4 | VCC | —— | —— | SN7401 |
| SN7404-HEX INVERT GATES | IN 1 | OUT 1 | IN 2 | OUT 2 | IN 3 | OUT 3 | GND | OUT 4 | IN 4 | OUT 5 | IN 5 | OUT 6 | IN 6 | VCC | —— | —— | SN7404 |
| SN7430-8-IN NAND GATE | IN A | IN B | IN C | IN D | IN E | IN F | GND | OUT | N/C | N/C | IN G | IN H | N/C | VCC | —— | —— | SN7430 |
| SN7442-4 TO 10 BCD DECODER | OUT 0 | OUT 1 | OUT 2 | OUT 3 | OUT 4 | OUT 5 | OUT 6 | GND | OUT 7 | OUT 8 | OUT 9 | IN D | IN C | IN B | IN A | VCC | SN7442 |
| SN7473 DUAL J-K M-S FLIP-FLOPS | CLK 1 | CLR 1 | K 1 | VCC | CLK 2 | CLR 2 | J 2 | NQ 2 | Q 2 | K 2 | GND | Q 1 | NQ 1 | J 1 | —— | —— | SN7473 |
| SN7474-DUAL D-EDG TRIG FLIP-FLOPS | CLR 1 | D 1 | CLK 1 | PRE 1 | Q 1 | NQ 1 | GND | NQ 2 | Q 2 | PRE 2 | CLK 2 | D 2 | CLR 2 | VCC | —— | —— | SN7474 |
| SN7480-GATED FULL ADDER | B* | B c | C n | NC n+1 | SUM | NSUM | GND | A 1 | A 2 | A* | A C | B 1 | B 2 | VCC | —— | —— | SN7480 |
| SN7486-QUAD 2-IN EXCL-OR GATES | IN 1A | IN 1B | OUT 1 | IN 2A | IN 2B | OUT 2 | GND | OUT 3 | IN 3A | IN 3B | OUT 4 | IN 4A | IN 4B | VCC | —— | —— | SN7486 |
| SN7490-DEC CNTR-DIV BY 2+5 | IN B-D | RST 0-1 | RST 0-2 | N/C | VCC | RST 9-1 | RST 9-2 | OUT C | OUT B | GND | OUT D | OUT A | N/C | IN A | —— | —— | SN7490 |
| SN7491-8 BIT SHIFT REGISTER | N/C | N/C | N/C | N/C | VCC | N/C | N/C | N/C | N CP | GND | IN B | IN A | Q | NQ | —— | —— | SN7491 |
| SN7492-DIV 12-CNTR DIV BY 2+6 | IN B-C | N/C | N/C | N/C | VCC | RST 0-1 | RST 0-2 | OUT D | OUT C | GND | OUT B | OUT A | N/C | IN A | —— | —— | SN7492 |

**ABBREVIATIONS:**

IN—INPUT
OUT—OUTPUT
GND—GROUND
VCC—SUPPLY VOLTAGE
CLK—CLOCK
CLR—CLEAR
Q—FLIP FLOP OUTPUT
NQ—INVERSE Q ("NOT" Q)
PRE—PRESET INPUT
N/C—NO CONNECTION
RST—RESET

puts to correspond to the other input combinations shown in the truth table for a NAND gate to see if the outputs conform to those given.

### SN7401: Quad two-input nand gates with open collectors

Testing of these NAND gates is similar to that procedure already discussed above for the SN7400, except that these gates have open-collector outputs and require the addition of "pull-up" resistors to drive the indicator lamps. Pull-up resistors are normally connected between the outputs and +5 V. This is done in the DIGI-DYNA-CHECK as follows:

Move slider **W** to +5 V to bring +5 volts out to binding post **W.** Now, connect pins **1, 4, 10,** and **13** (the NAND gate outputs) to binding posts **A** through **D**, respectively, via their matrix sliders. You can now connect the required resistors (approx. 1000 to 4000 ohms).

Connect $V_{cc}$ and ground and set the inputs as before (for the SN7400) observing the proper terminal connections for the SN7401, and carry the gates through their various input combinations as before.

### SN7473: Dual J-K flip-flops

This integrated circuit contains two complete J-K flip-flops in a single package. For the sake of simplicity, and since both flip-flops operate identically, we will only go through the tests for one of them. After the IC has been properly inserted into the test socket, connect pin 4 to +5 V and pin 11 to GND to supply operating power to the circuit. Let's go through a manual test, first. Set pin 1 (CLOCK input) to the STEP position and pins 14 (**J**-input) and 3 (**K**-input) to one of the combinations shown in the truth table for a J-K flip-flop. Momentarily connect pin 2 (CLEAR) to GND and then to +5 V and leave it there. This is done to clear it, i.e., bring it to an initial state. Enter a "clock" pulse, manually, by depressing the STEP button one time only and releasing it. The outputs, **Q** and **Q̄**, should react according to that which is given in the truth table for the particular combination of **J** and **K** inputs that you have entered. Clear the flip-flop again by momentarily grounding the CLEAR input (pin **2**) and returning it to +5 V. Set the **J** and **K** inputs (pins **14** and **3**, respectively) to a different combination of logic states and then enter a clock pulse. Check the result once again and compare it with the truth table. Try the other two J-K combinations, referring, again, to the table. You can also try entering several clock pulses for the **1, 1** combination of J-K inputs. The outputs should oscillate back and forth between two states. The second flip-flop in this IC can be checked out in a similar manner, either separately, or simultaneously with the first one, as above.

To operate the flip-flops automatically, at a rate of 50 kHz. for monitoring input/output relationships with a scope, use the INT CLOCK setting instead of the STEP setting for the clock input. Set the matrix sliders corresponding to the output terminals of interest to positions **A** through **D** and move the sliders **W** through **Z** to the same positions as the input terminals of interest and connect the scope to the binding posts. For every two clock pulses, you should see one square-wave pulse at either of the two outputs. The two outputs (**Q** and **Q̄**) should be 180° out of phase. A flip-flop is, thus a divide-by-two device.

The SN7490 contains four flip-flops that are internally wired to form separate divide-by-two and divide-by-five counters. These can be operated either separately with their own individual inputs and outputs, or they can be wired, externally, together as a single divide-by-ten (decade) counter by connecting the output terminal of the divide-by-two section to the input terminal of the divide-by-five section and using input A (to the first flip-flop) as the decade input. When it is operated in this mode, the outputs are in BCD code; the four outputs have the values:

| Output: | A | B | C | D |
|---|---|---|---|---|
| Value: | $2^0$<br>(1) | $2^1$<br>(2) | $2^2$<br>(4) | $2^3$<br>(8) |

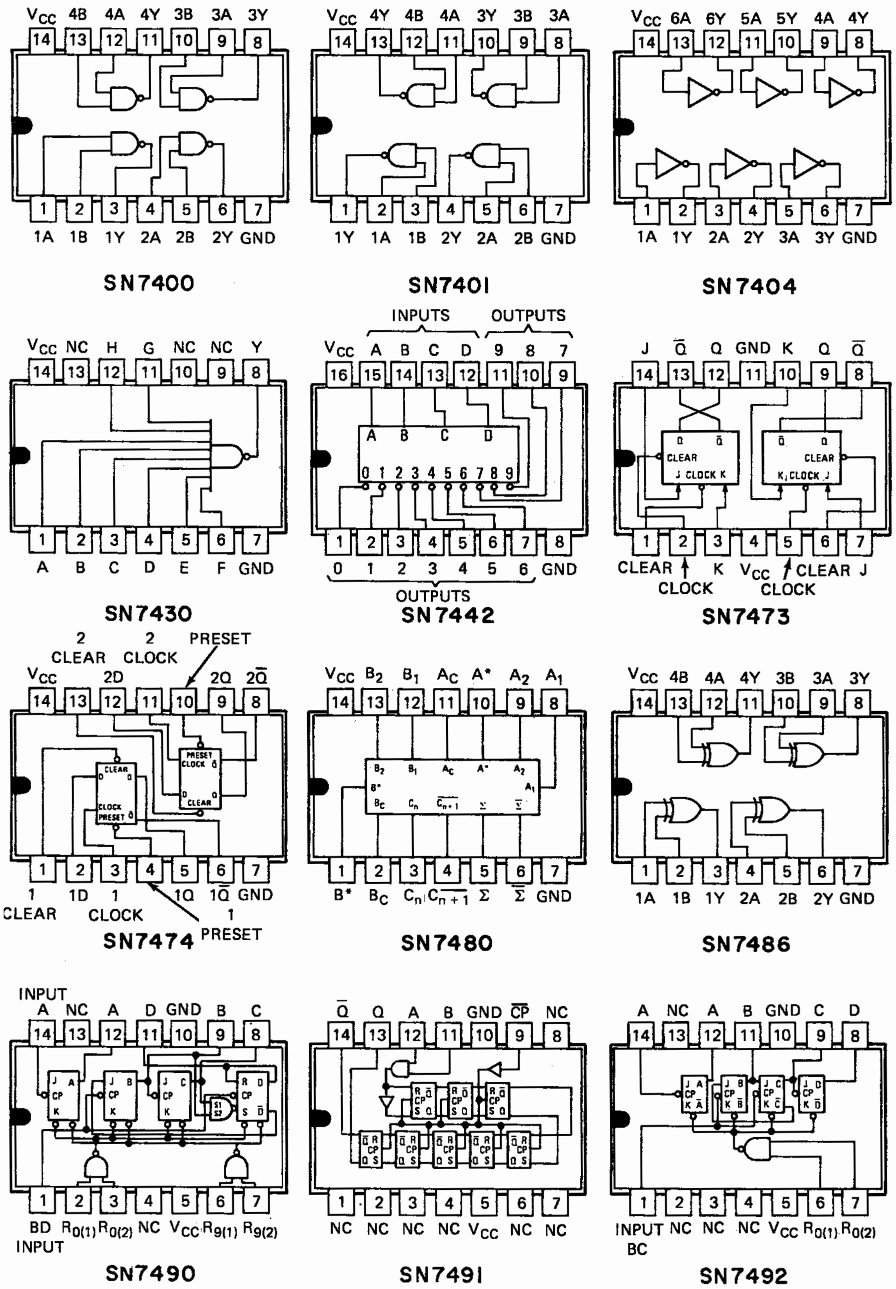

SN7400 SN7401 SN7404

SN7430 SN7442 SN7473

SN7474 SN7480 SN7486

SN7490 SN7491 SN7492

NOTES:

NC—NO CONNECTION
A & B-INPUTS
Y—OUTPUTS
Σ and Σ̄ — SUM OUTPUTS

ALL IC'S IN DUAL-IN-LINE PACKS
TOP VIEWS SHOWN

A* AND B*—Alternate inputs

**BASING OF ALL IC's listed in the table on the preceding page. You'll want these diagrams handy when you set up your IC tester to check out any of these units.**

Thus the BCD-coded output of the decade counter is represented by the following conditions of the four flip-flop outputs:

| Number | A | B | C | D |
|---|---|---|---|---|
| 0 | 0 | 0 | 0 | 0 |
| 1 | 1 | 0 | 0 | 0 |
| 2 | 0 | 1 | 0 | 0 |
| 3 | 1 | 1 | 0 | 0 |
| 4 | 0 | 0 | 1 | 0 |
| 5 | 1 | 0 | 1 | 0 |
| 6 | 0 | 1 | 1 | 0 |
| 7 | 1 | 1 | 1 | 0 |
| 8 | 0 | 0 | 0 | 1 |
| 9 | 1 | 0 | 0 | 1 |

When the unit has counted ten input pulses, it automatically resets itself to zero and starts again. Let's now see how this IC is tested with DIGI-DYNA-CHECK.

**1. As separate ÷2 and ÷5 counters—**

Make the following initial settings:

| Pin No | Set to | Remarks |
|---|---|---|
| 10 | GND | To supply power to the IC |
| 5 | +5 V | |
| 2 | GND | This deactivates the reset inputs to permit the flip-flops to function |
| 3 | GND | |
| 6 | GND | |
| 7 | GND | |
| 14 | STEP | Input to the ÷2 counter |
| 1 | STEP | Input to the ÷5 counter |

Momentarily move the sliders corresponding to pins 2, 3, 6, and 7 to +5 V, simultaneously, and then back to GND. This resets both counters to zero and allows input pulses to be counted. All output lamps should now be off (logical**0**). Depress the STEP button and release it to enter a single count pulse to both sections. Repeat this four more times, comparing the output logic states with those shown in the table above:

| | Input Pulses | | | | | |
|---|---|---|---|---|---|---|
| Lamp No | 1st | 2nd | 3rd | 4th | 5th | Remarks |
| 12 (Output A) | 1 | 0 | 1 | 0 | 1 | ÷2 counter |
| 9 (Output B) | 1 | 0 | 1 | 0 | 0 | ÷5 counter |
| 8 (Output C) | 0 | 1 | 1 | 0 | 0 | |
| 11 (Output D) | 0 | 0 | 0 | 1 | 0 | |

**2. As a single ÷10 (decade) counter—**

Make the following changes in the matrix switch settings:

| Move Pin No | to Position |
|---|---|
| 1 | A |
| 12 | A |

**Remarks**

This disconnects input of the ÷5 unit from STEP and connects a jumper (bus A) between the ÷2 output and ÷5 input.

Reset all counters as described above and then enter ten pulses, noting whether the outputs correspond to the 0 thru 9 BCD code given earlier. Here again, as in our earlier discussion involving the flip-flop tests, the use of the automatic INTERNAL CLOCK function instead of the manual STEP function permits you to use a scope to monitor input/output logic states and waveforms.

## Checking current drain IC

It's a simple matter, with the DIGI-DYNA-CHECK, to route +5 volts to the $V_{cc}$ terminal of an IC, indirectly, via a pair of binding posts. An ammeter connected to the posts will then be in series with the power supply to the circuit and will indicate current drain. This is accomplished by moving one of the sliders **W** through **Z** to +5 V, thus bringing +5 volts out to a binding post. Moving the slider corresponding to the IC's $V_{cc}$ terminal to one of the positions **A** through **D** will bring it out to a binding post. Current drain can be monitored continuously while performing other tests on the IC.

We have seen that there are many ways in which the DIGI-DYNA-CHECK can be used to test digital ICs. A complete description of all of its uses is beyond the scope of this article. The use of a matrix switch together with the input/output binding posts makes the checker *almost* universal. Any IC terminal can be connected to any function, either internally or externally. Where needed, special adapters can be made to accommodate package types other than 14- and 16-pin DIPs. Thus, you might say that the DIGI-DYNA-CHECK is as close to *obsolete-proof* as you can get!

The multitude of ways in which this tester can be applied to digital IC testing is limited only by your imagination! **R-E**

Many readers have already asked "Where do I buy parts to build my own Digital IC Tester, as described in the May 1972 issue?" The answer to that query was supposed to have appeared at the end of the parts list last month. As you must know by now, it did not. Therefore, we are presenting here, the listing that was omitted last issue:

**The following kits of parts are available from The Electronetics Co. Inc., P.O. Box 278, Cranbury, N.J. 08512.**

**DDC-1 consisting of Q1 thru Q36; D1 thru D5; bridge rectifier; IC1; matrix switch and DIP test clip: $54.50, including postage and insurance.**

**DDC-2 consisting of a manual listing pin connections for many popular integrated circuits, useful for programming the DIGI-DYNA-CHECK: $2.00 including postage.**

# *cb radio call light*

CB transceivers are often installed on motorcycles, sports cars, snowmobiles and in countless other noisy locations. The high noise level may cause an operator to miss an incoming call. An article in *Electron* magazine (Toronto, Ont.) shows how a call light can be added to indicate that a signal is being received.

The circuit in Fig. 1 can be added to receivers that produce a negative-going voltage at the squelch output when a signal comes on the air. The lamp turn-on voltage depends on the setting of the squelch control. The indicator circuit can also be driven by the emitter voltage of an rf transistor if this voltage swings negative on an incoming signal. With this arrangement, the lamp comes on with a S4-S6 signal. The circuit in Fig. 2 can be used in sets where an incoming signal develops a positive-going voltage.

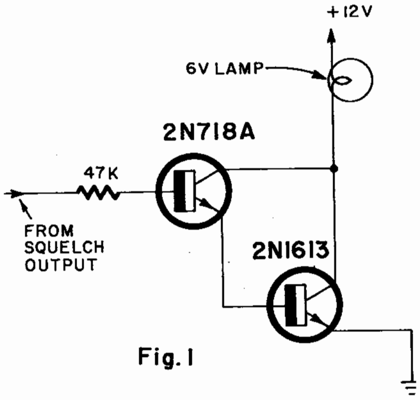

Fig. I

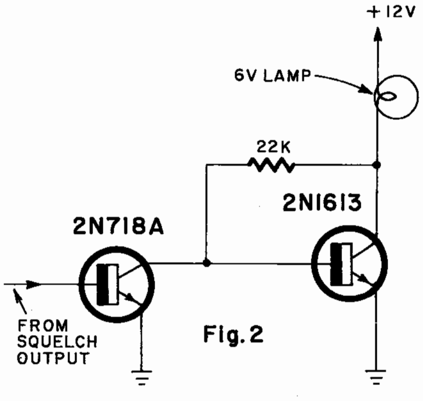

Fig. 2

FREE!

BRAND NEW
FALL AND WINTER
RADIO-TV
ELECTRONICS
CATALOG

YOUR BUYING GUIDE FOR: • Stereo & Hi-Fi Systems & Components • Tape Recorders • Electronic Parts, Tubes, Tools • Phonos & Records • Ham Gear • Test Instruments & Kits • Cameras & Film • PA • Citizens Band • Radio & TV Sets • Musical Instruments

MAIL TODAY TO:

BURSTEIN-APPLEBEE
Dept. EWK 1012 McGee, Kansas City, Mo. 64106

Name____________________
Address____________________
City____________________
State__________ Zip Code__________

CIRCLE NO. 124 ON READER SERVICE CARD

ARE YOU CASHING-IN
ON THE PROFITABLE
2-WAY RADIO SERVICE BUSINESS?

★ Motorola will train you for this rewarding, elite profession
★ Send for our FREE EVALUATION EXAM. Prove to yourself that you are ready to learn FM 2-way radio servicing.

Opportunities in 2-way radio servicing are virtually unlimited. ■ Just one of the hundreds of successful Motorola Service Stations writes, "we would be pleased to interview any graduate of your school that has received some training in 2-way radio maintenance. We are an established firm, 10 years old, with a promise of expansion governed by our ability to obtain competent technicians." ■ Get all the facts today. There is no obligation and no salesman will call.

MOTOROLA TRAINING INSTITUTE
4545 West Augusta Blvd. • Chicago 51, Illinois • Dept. AEF 741

☐ Send me FREE entrance exam.
☐ Send full details on Home Study Course on FM 2-way Radio Servicing
☐ Send me details on how you can help me prepare for an FCC License.

Name____________________Occupation__________
Address____________________
City____________________Zone_____State__________

CIRCLE NO. 105 ON READER SERVICE CARD

# SEMICONDUCTOR TEST SET

By M. GROSS

*This easy-to-use test set measures leakage current and transistor beta and will also test diodes and SCR's.*

THE semiconductor test set described in this article is designed to provide a great deal of information about the semiconductor device under test without requiring complex calibration or testing procedures. Most tests consist of inserting a semiconductor device into the test socket, pushing a button, and reading the results on a meter or short-circuit indicator lamp.

The test set can measure leakage current and d.c. current gain (*beta*) of transistors and indicate shorted or open junctions *via* the indicator lamp. It can also show shorts or open circuits in diodes and SCR's in both the forward- and reverse-biased conditions. In addition, the test set can demonstrate whether an SCR is functioning properly, that is, if the device will conduct when current is supplied to the gate and if it will turn off when the voltage is momentarily removed from the device.

Fig. 1. Parts list and schematic for semiconductor tester.

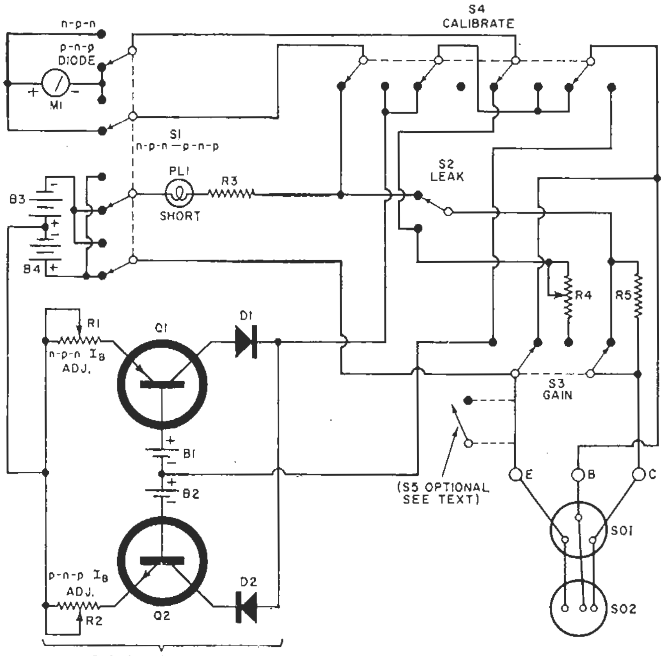

R1, R2—50,000 ohm pot
R3, R5—47 ohm, ½ W. res.
R4—5000 ohm pot
M1—0-100 μA meter
S1—4 p.d.t. rotary sw.
S2—S.p.d.t. push-button sw.
S3—D.p.d.t. push-button sw.
S4—4 p.d.t. push-button sw.
PL1—#49 pilot light
SO1, SO2—Transistor socket
D1, D2—1N100 or equiv.
B1, B2—1.35 V mercury battery
B3, B4—6 V battery
Q1—P-n-p transistor, beta more than 20
Q2—N-p-n transistor, beta more than 20

### Tests Performed

The short test determines the existence of a shorted emitter-collector or base-collector junction; the presence of such a short is indicated when the front-panel indicator lamp glows.

The leak test measures the current flowing through the collector of the transistor under test. This test is similar to the short test except that the meter is connected in place of the lamp. When a transistor is inserted in the socket, the meter will indicate $I_{ces}$ (the amount of leakage current flowing from collector to emitter with the base connected to the emitter). To measure $I_{cbo}$ (the current flowing from collector to base with the emitter open), the emitter lead is removed from the test socket. The meter then indicates the $I_{cbo}$ current.

To perform the d.c. gain (*beta*) test, the transistor base is biased through a constant-current generator, and the ratio of collector current ($I_c$) to base current ($I_b$) represents the d.c. current gain ($\beta$). Since the current generator supplies a constant base drive of 100 $\mu$A and the meter is a 100-$\mu$A movement adjusted to read 10 mA full scale, the meter scale will indicate $\beta$ directly from 0 to 100.

### Test Set

A complete schematic for the test set is shown in Fig. 1. Switch *S*1 connects batteries *B*3 and *B*4 to the circuit so that the device under test is properly biased. This switch also connects the meter (*M*1) so that it always indicates up scale.

With switches *S*2, *S*3, and *S*4 in their normal (undepressed) condition, a device short circuit will be indicated. By depressing *S*2 ("Leak"), either $I_{ces}$ or $I_{cbo}$ can be read.

To test gain, depress *S*3 ("Gain"). In this mode, resistor *R*5 is connected into the collector-emitter loop and the meter is arranged to indicate the current flowing through this resistor. The meter is adjusted to indicate 10 mA (full scale) by *R*4. The current generator is connected to the base of the transistor under test and adjusted to provide 100 $\mu$A of base drive. If a transistor having a $\beta$ of 100 were tested, the current through *R*5 would be $\beta$ ($I_b$) or 10 mA. This would produce a full-scale indication on the meter, representing a $\beta$ of 100. Similarly, if a transistor having a $\beta$ of 10 were tested, the current through *R*5 would be 1 mA, a deflection of one-tenth the meter scale. Thus, the meter is used to indicate $\beta$ directly.

By releasing *S*3 and depressing *S*4 ("Calibrate"), the meter is then unshunted and connected in series with the

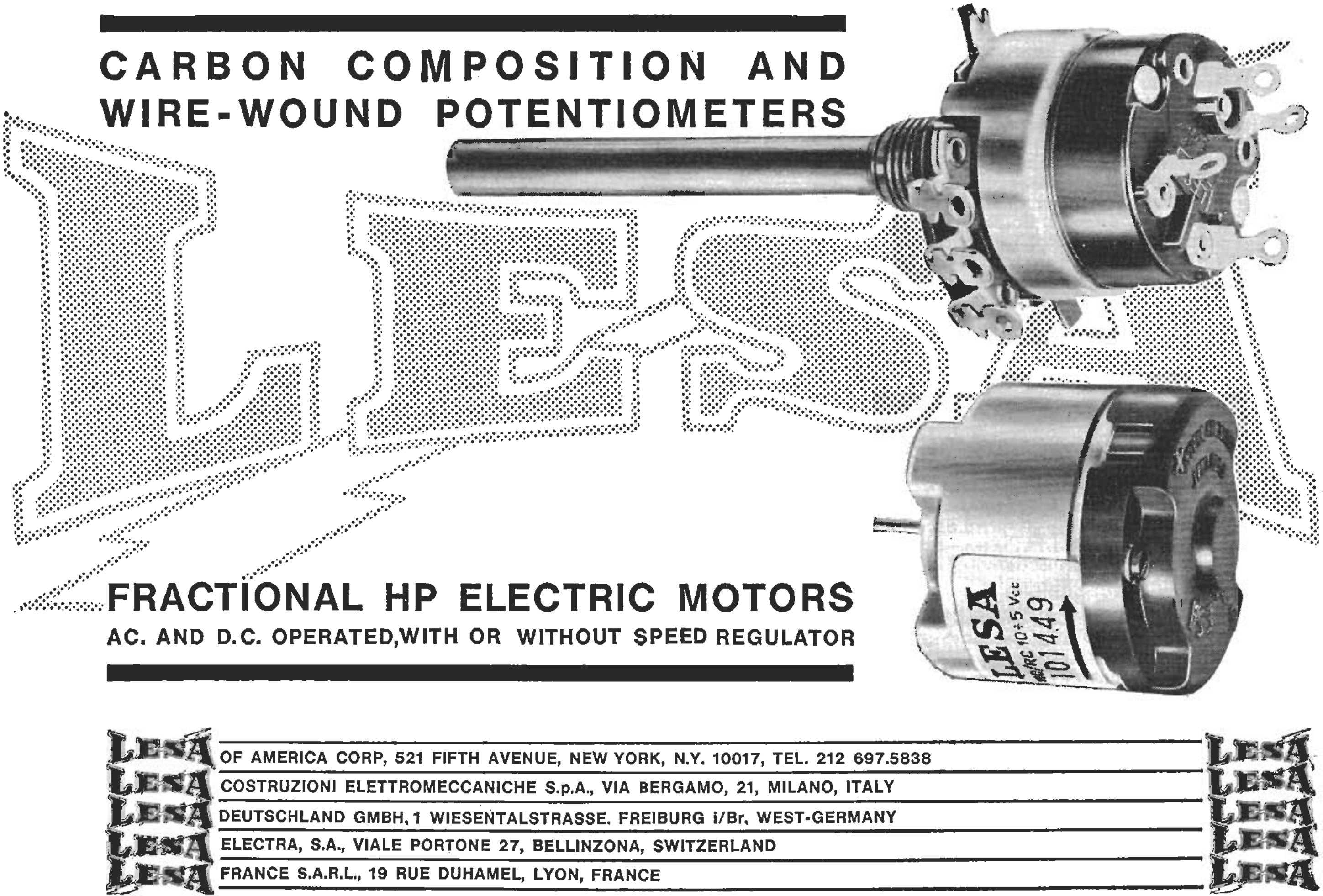

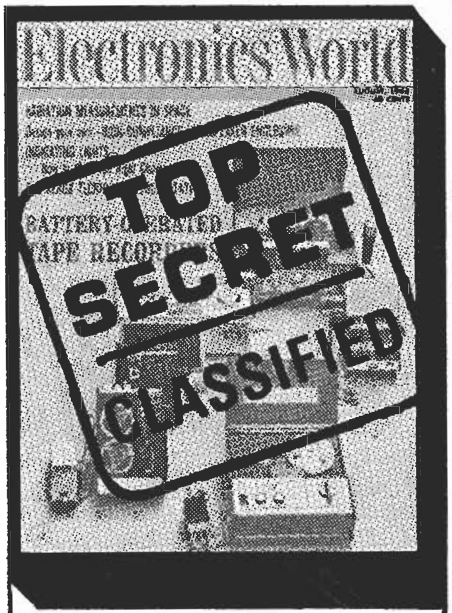

current generator and the base lead. Thus, the base drive in $\mu$A may be read. With *S4* depressed, base-current-adjusting resistors *R1* and *R2* may be set to provide 100 $\mu$A of base drive.

### Current Generator

It is obvious from the preceding discussion that any change in the amount of base current supplied by the current generator will cause an erroneous $\beta$ indication. It is desirable, therefore, to minimize the effects of emitter-base junction impedance changes on base current. Theoretically, this may be accomplished by using an "ideal" current generator, that is, a device which has an infinite input impedance and which can supply any desired current. In practice, however, this type of device may be a little difficult to create.

The current generator shown in Fig. 1 is really two generators connected in parallel. The first, consisting of *R1*, *Q1*, *B1*, and *D1*, is used to test *n-p-n* transistors; the second, consisting of *R2*, *Q2*, *B2*, and *D2*, is used for *p-n-p* transistors.

The current-generator circuit is a common-base configuration, with the emitter-base junction impedance $R_{be}$ of the transistor under test as the collector load. This type of circuit is used to advantage since the impedance seen looking back into the generator collector is very high. Thus, changes in $R_{be}$ have very little effect on the current flowing through the generator transistor and into the base of the transistor under test. $R_{be}$ can vary from a short (zero ohms) to 8000 ohms and will result in only a 2% change in base drive.

### Calibration

After the circuit is completed and inspected for wiring faults, the test circuits may be calibrated as follows:

1. Connect a 1000-ohm pot in series with an external 10-mA meter or v.o.m. between the test set "C" and "E" terminals. Adjust this pot for 10-mA deflection on the external meter. Press S3 and adjust *R4* for full-scale deflection of test-set meter.
2. Short the test set "B" and "E" terminals with a clip lead. With S1 in the "P-N-P" position, depress S4. Adjust *R2* to produce full-scale deflection on the test-set meter. Place S1 in the "N-P-N" position. Depress S4 and adjust *R1* for full-scale deflection. Both *R1* and *R2* may be adjusted with a transistor inserted in one of the test sockets and with the clip lead removed from the "B" and "E" terminals. This will ensure maximum accuracy for the $\beta$ test.

### Examples of Tests

*Transistors.* A transistor is inserted in the test socket with emitter, base, and collector leads in their proper positions. Flipping S1 back and forth between "N-P-N" and "P-N-P" should make lamp *PL1* light in one position and not in the other. The position of S1 in which *PL1 does not* light is the proper one for the transistor under test. In other words, if *PL1 does not* light in the "N-P-N" position, the test transistor is *n-p-n*; if *PL1 does not* light in the "P-N-P" position, the transistor is *p-n-p*.

If *PL1* does not light in either position of S1, the transistor is open; if *PL1* stays lit in both positions of S1, the transistor is shorted.

With S1 in the proper position for the device under test, S2 ("Leak") is depressed. The total leakage current $I_{ces}$ (in $\mu$A) may be read on the meter. $I_{cbo}$ may be read by removing the emitter lead of the transistor from the test socket and depressing S2. If the builder desires, another switch may be added (*S5*; see schematic) which will effectively remove the emitter lead from the circuit for this test.

*Diodes.* The anode lead of the diode is connected to the "B" terminal of the test set and the cathode is connected to the "C" terminal. With S1 in "Diode P-N-P" position, lamp *PL1* should light with S1 in "N-P-N" position, the lamp should go out. If the light is off in the "P-N-P Diode" position but is lit in the "N-P-N" position, the diode is reversed. If the light stays on in both positions, the diode is shorted; if the light fails to go on in either position, the diode is open. With S1 in the "N-P-N" position, S2 is depressed and the reverse leakage current may be read on the front-panel meter.

*SCR's.* The stud of an SCR is usually the anode, the large terminal the cathode, and the small terminal the gate. Attach the anode to the "E" terminal of the test set, the cathode terminal to "C", and place S1 in the "P-N-P Diode" position. The light should stay off. When a clip lead is attached to the "B" terminal of the test set and the other end of this clip lead touched to the gate lead of the SCR, the light should go on and stay lit even when the clip lead is removed from the gate. When S2 is depressed, the light should go off and stay off and there should be no deflection observed on the meter.

When the clip lead is touched to the gate, current flows into the gate, turning the SCR on. When S2 is depressed, in the time it takes this switch to go from its normally closed to normally open position (about 30 milliseconds), voltage is removed from the SCR. In this time the device should turn off. Any delay in turnoff of the SCR will be observed as a kick of the meter needle. If the SCR fails to turn off, the meter will be pegged so that S2 should be released. ▲

# TRANSISTOR TESTER

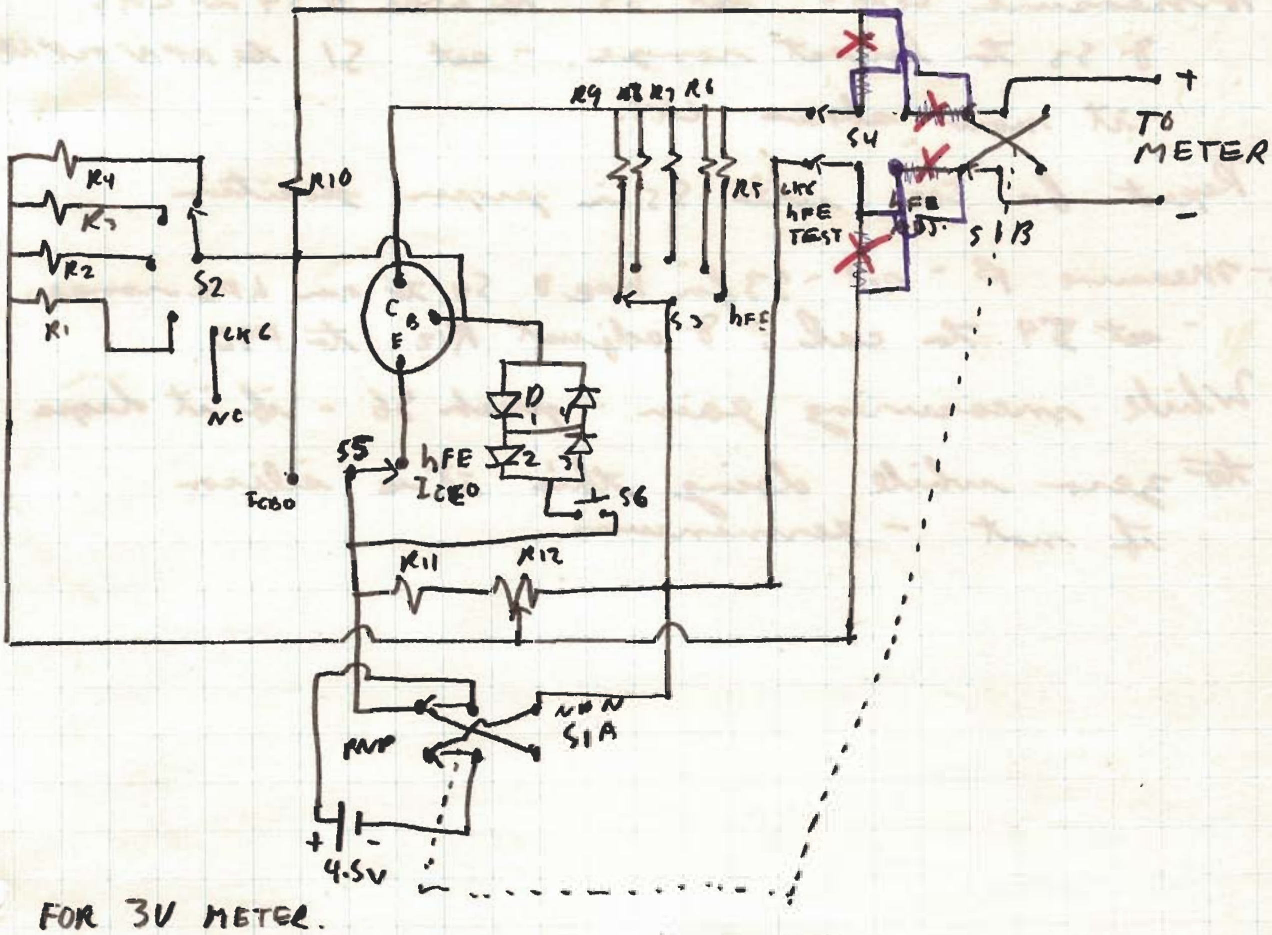

FOR 3V METER.

R1 - 6000 Ω - 0-30 hFE (10K//15K)

ALL - 5% ½W

R2 - 20 K - 0-100 hFE

R3 - 60K - 0-300 hFE (100K//150K)

R4 - 200K - 0-1000 hFE

R5 - 200 Ω

R6 - 1K - 3000 mA

R7 - 10K - 300 mA

R8 - 100K - 30 mA

R9 - 1.1M - 3 mA.

R10 - 1K (solely to prevent battery drain if O/P's are shorted.

R11 - 150 Ω

R12 - 100 Ω POT - hFE ADJ (CAL.)

S1 - 4PDT

S2, S3 - 1 POLE - 5 POS

S4 - DPDT

S6 - MOMENTARY PUSH BUTTON

D1 → D4 - any Germanium diode

USING

1. - Measure $I_{CBO}$ & $I_{CEO}$

To measure $I_{CBO}$ - set S5 to $I_{CBO}$. & S4 to LKG
& S3 to lowest range. - set S1 to NPN or PNP
- it now shows LKG.

Repeat for $I_{CEO}$ with S5 in proper position.

2. - Measure β - set - S3 for $h_{FE}$ & S4 to an $h_{FE}$ range.
- set S4 to cal. & adjust R12 to FSD.

While measuring gain - push S6 - if it drops to zero while doing this it is silicon
if not - germanium

# Multimeter measurements yield device-model parameters

by Martin A. Green
*University of New South Wales, Kensington, Australia*

In computer analysis of electronic circuits, the most frequently used bipolar-transistor models for dc conditions are derived from the well-known Ebers-Moll equations:

$$\begin{aligned} I_E &= -I_{ES}[\exp(qV_{BE}/kT) - 1] \\ &\quad + \alpha_R I_{CS}[\exp(qV_{BC}/kT) - 1] \\ I_C &= \alpha_F I_{ES}[\exp(qV_{BE}/kT) - 1] \\ &\quad - I_{CS}[\exp(qV_{BC}/kT) - 1] \\ I_B &= -(I_E + I_C) \end{aligned}$$

where $I_E$, $I_C$, and $I_B$ are the terminal currents, $V_{BE}$ and $V_{BC}$ are the voltages between these terminals, q is the electron charge, k is Boltzmann's constant, and T is the absolute temperature. A positive value of current flows into the transistor; a negative value flows out of the transistor. Values of the Ebers-Moll parameters $I_{ES}$, $I_{CS}$, $\alpha_F$, and $\alpha_R$ are usually required as program inputs [see "Modeling the bipolar transistor, part 1," *Electronics*, Sept. 19, 1974, p. 114]. These parameters, as well as the device beta, can be determined for any given transistor by measuring six resistances with a digital multimeter.

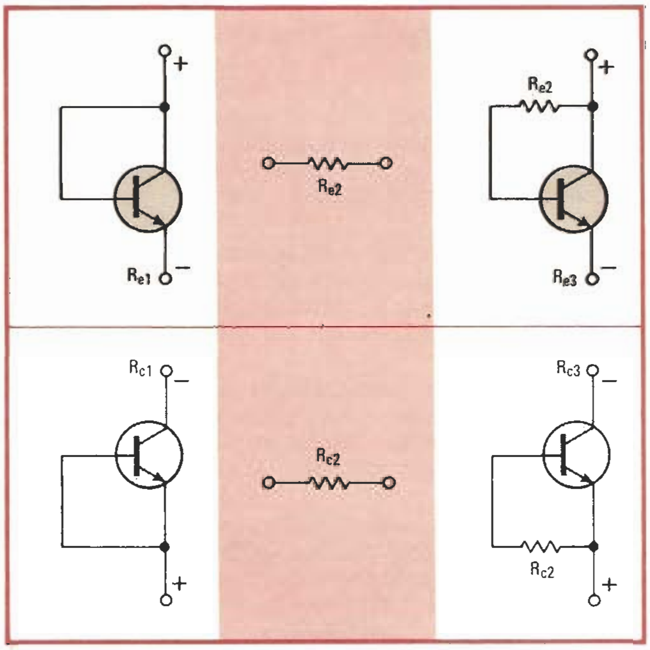

**Just measure ohms.** These six resistance measurements, made with a digital multimeter, yield the parameters for the Ebers-Moll model of a transistor. The open circles represent the terminals between which the measurements are made, while the + and − signs indicate the bias the DMM must establish on the junctions.

The method exploits the measurement technique commonly used on the resistance ranges of a DMM, which is, essentially, to pass a known constant current through the unknown resistance and measure the resulting voltage developed across it. The current passed, $I_M$, depends on the resistance range selected and, typically, may vary from 100 nanoamperes on high-resistance ranges to 10 milliamperes on low ranges.

Preliminaries consist of determining the current through the unknown on the different ranges of the DMM and selecting the range where the current, $I_M$, is reasonably near the probable operating current of the transistor. $I_M$, multiplied by the full-range reading in ohms must equal a voltage large enough to forward-bias the transistor junctions (about 0.7 V for silicon devices).

All measurements described (except those of $R_{e2}$ and $R_{c2}$) must then be made on this range. After experimenting to find which direction of the probe connections forward-biases the transistor junctions, the following measurements are performed (see the diagram):

- Measure $R_{e1}$, the forward-biased resistance of the emitter-to-base junction with collector shorted to base.
- Select a resistor with its nominal resistance near the value $\beta_F R_{e1}$, where $\beta_F$ is the estimated beta of the transistor in the normal forward mode of operation. Measure the exact resistance, $R_{e2}$, of this resistor.
- Measure the resistance between the emitter and collector while the emitter-to-base junction is forward-biased and $R_{e2}$ is connected between the base and the collector. Call this value $R_{e3}$.
- Repeat the above procedure with the transistor in its inverse connection, i.e., with the collector and emitter exchanged in the above description. Record the corresponding resistances $R_{c1}$, $R_{c2}$, and $R_{c3}$.

From the Ebers-Moll equations, it is not difficult to show that the required transistor parameters can be calculated by the expressions:

$$\begin{aligned} \alpha_F &= 1 - (R_{e3} - R_{e1})/R_{e2} \\ \beta_F &= [R_{e2}/(R_{e3} - R_{e1})] - 1 \\ I_{ES} &= I_M/\exp(R_{e1}/r_e) \\ \alpha_R &= 1 - (R_{c3} - R_{c1})/R_{c2} \\ \beta_R &= [R_{c2}/(R_{c3} - R_{c1})] - 1 \\ I_{CS} &= \alpha_F I_{ES}/\alpha_R \\ &\qquad [\text{or } I_M/\exp(R_{c1}/r_e)] \end{aligned}$$

where $r_e$ is equal to $(kT/q)/I_M$ and has a value in ohms of $25/I_M$ at temperatures around 17°C if $I_M$ is expressed in milliamperes.

As an example, the following measurements were made upon a 2N3693 transistor using the 20-kΩ range of a Fluke 8000A DMM (except for the measurement of $R_{e2}$). The current through the unknown in this range was 0.1 mA, giving a value of $r_e$ of about 250 Ω. The measured resistances were:

$R_{e1} = 6{,}080\ \Omega$

$R_{e2} = 216{,}000\ \Omega$
$R_{e3} = 10{,}630\ \Omega$
$R_{c1} = 5{,}620\ \Omega$
$R_{c2} = 4{,}770\ \Omega$
$R_{c3} = 9{,}760\ \Omega$

These readings yield the following values for the transistor parameters:

$\alpha_F = 0.979$
$\beta_F = 46.5$
$I_{ES} = 3 \times 10^{-15}$ A
$\alpha_R = 0.132$
$\beta_R = 0.152$
$I_{CS} = 2 \times 10^{-14}$ A

Inserted into the Ebers-Moll equations, these values allow the transistor performance to be predicted over a wide range of operating conditions.

At moderate to high current levels, parasitic resistances can influence the transistor performance [see "Modeling the bipolar transistor; part 2," *Electronics*, Oct. 31, 1974, p. 71]. This method of calculating $\alpha_F$, $\alpha_R$, $\beta_F$, and $\beta_R$ continues to give accurate results. The value calculated for $I_{ES}$ also will usually be accurate for values of meter current, $I_M$, up to the likely maximum of 10 mA. However, the first expression given for $I_{CS}$ is preferable to the alternative one that is given in brackets, because the high series resistances associated with the base and collector can cause the bracketed expression to be inaccurate. □

# Pulsed transistor test simulates linear operation

by Glenn Filler
*Westinghouse Semiconductor Division, Youngwood, Pa.*

Linear operation of high-power output transistors in audio systems may subject them to heat failure. Yet most reliability tests pulse the transistors into saturation, rather than subjecting them to the sudden, simultaneous high current and high voltage they will actually experience. The solution is simulation of operating conditions by pulsing the transistor in the unsaturated mode with the circuit used by audio manufacturers.

The circuit (Fig. 1) simulates the pulses of high power that elevate junction temperatures, particularly when the amplifier must produce high outputs at high frequencies. Prolonged high junction temperatures often cause collector-to-emitter shorts, and the transistors fail.

The transistor under test is pulsed at a low repetition rate. Capacitor C is charged to a preset voltage through resistor $R_1$ with switch S in position 1. When the switch is moved to position 2, C discharges through $R_2$ and $D_1$ to turn on the driving transistor Q. Resistor $R_3$ is included in the circuit to allow C to discharge fully (instead of down to the sum of forward drops in $D_1$ and the base-to-emitter junction of Q); $R_4$ furnishes a path for the turn-off current of Q, and diode $D_1$ prevents $R_3$ from serving as a low-resistance shunt of $R_4$ for collector-to-base leakage currents.

The duration of the discharge pulse in the drive circuit is on the order of half a second; it can be varied by changing the values of C, $R_2$, and $R_3$. The long pulse of collector current from Q drives the base of the transistor under test.

The collector of the transistor under test is pulsed at a 60-hertz rate by a half-wave supply that consists of the Variac output and diode $D_2$. The peak collector voltage can be as high as 75 volts, and the current as high as 10 amperes (depending on the values of $R_7$ and $R_8$). The duration of the base drive covers many cycles of the collector voltage; therefore the transistor is subjected to extended pulsing that tests its high-power operating capability.

The self-triggered X-Y oscilloscope is set to a vertical range of 0.1 volt per division (corresponding to an emitter current of 1 A/div) and a horizontal range of 10 V/div (which measures the collector-to-emitter voltage). The base drive and the collector supply are first adjusted to provide a low-current, low-voltage display. When the transistor turns on, the base and collector

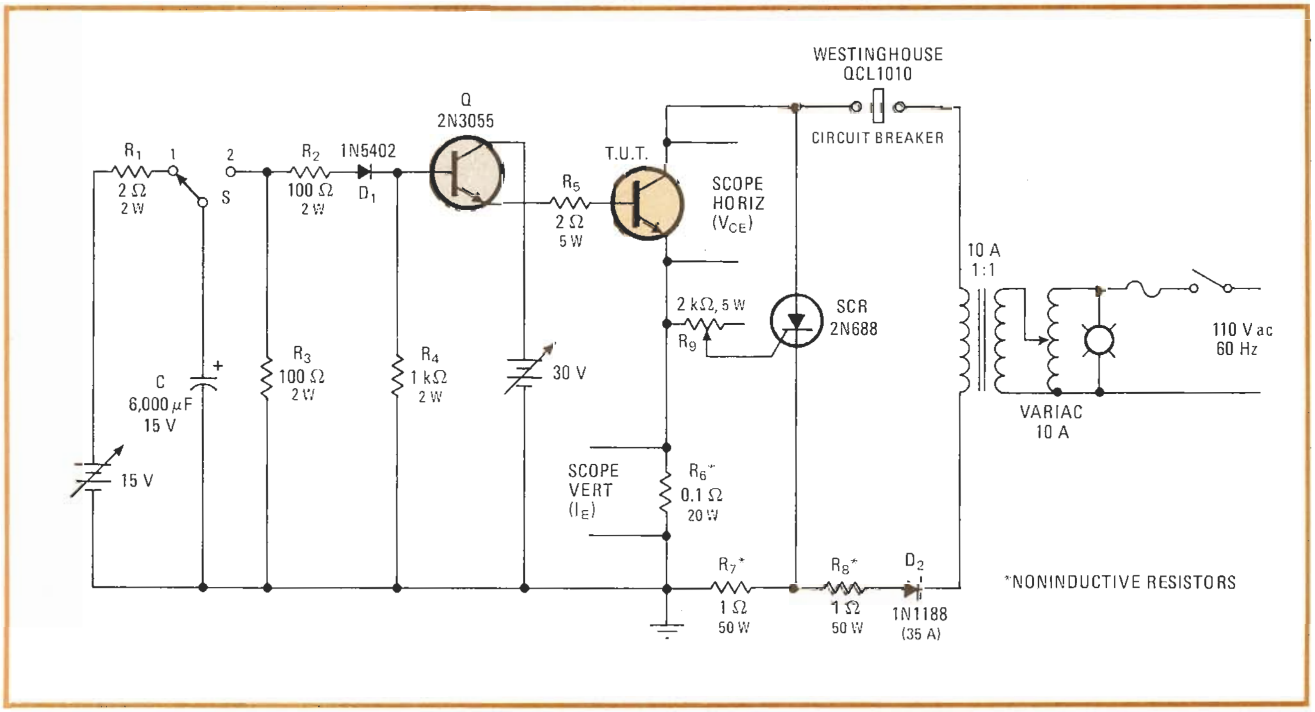

**1. Operating ability.** Circuit tests high-power audio output transistors for ability to perform at the high current and high voltage levels they'll meet in linear operation. Transistor under test is pulsed with collector voltage at 60 Hz; base drive is applied from 2N3055 for a duration determined by discharge of C. Failure mode is most likely to be second breakdown caused by heat dissipation at junctions.

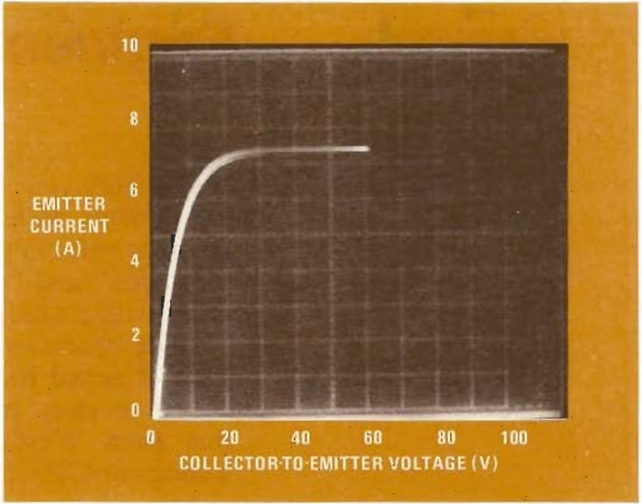

**2. Here's the picture.** Audio transistor performance in circuit of Fig. 1 is monitored by oscilloscope display. Here transistor shows satisfactory behavior. If second breakdown causes collector-to-emitter short circuit, oscilloscope trace drops back to zero.

supplies are readjusted to the test levels of $V_{CE}$ and $I_E$.

If the transistor can meet the test conditions, the scope display looks like Fig. 2. But if second breakdown causes a collector-to-emitter short circuit, the voltage falls to zero. When $V_{CE}$ drops, the current through the transistor exceeds the test level; this triggers the silicon controlled rectifier, which puts a short across the line and opens the circuit breaker.

The triggering level of the SCR is set before base drive is applied. With the transistor under test shorted out, potentiometer $R_9$ is adjusted to let the SCR fire at the desired current level. □

# FET tester

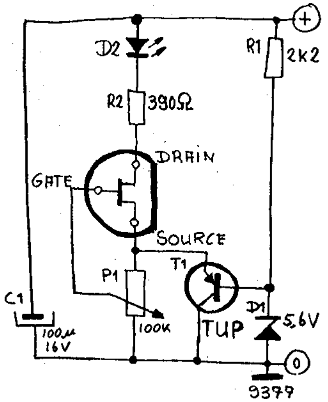

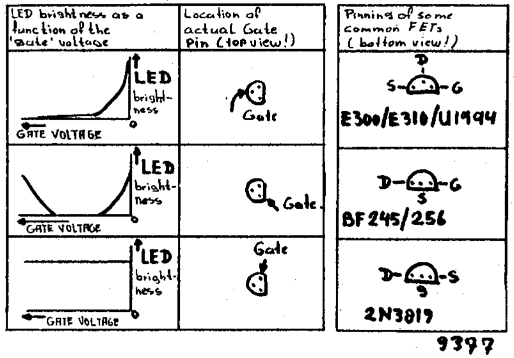

This tester is intended for N-channel FETs. It gives an indication of performance, measures the pinch-off voltage and 'finds' the Gate. Provided the FET is conducting, the Source is held at approximately 6 V by R1, D1 and T1. P1 sets the negative Gate bias at any value between 0 and 6 V. At zero bias, the FET should be conducting and LED D2 will light. As the slider of P1 is moved down towards ground, the negative bias increases and the LED should gradually dim out. The point at which the LED is completely dark gives a rough indication of the pinch-off voltage. P1 can be calibrated with the aid of a relatively sensitive multimeter, or, alternatively, it can be provided with a linear scale.
The Gate connection of an unknown device can be found by referring to the table.

---

# Transistor and diode tester

R. Dörer

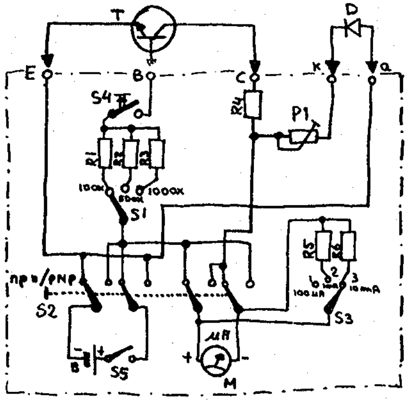

Only a handful of parts are required for this simple tester. It can be used to measure the following parameters:

**Transistors** (both PNP and NPN):
Collector leakage current $I_{CEO}$: 3 ranges (100 $\mu$A, 1 mA and 10 mA), selected by S3.
Current gain: 3 ranges (x 100, $I_B$ = 100 $\mu$A; x 500, $I_B$ = 20 $\mu$A; x 1000, $I_B$ = 10 $\mu$A), selected by S1. The measurement is carried out by setting S3 to the 10 mA range, selecting the required range with S1 and depressing S4.

**Diodes:**
Leakage current.
Forwards current as a function of the setting of P1.

**Parts list:**
R1 = 39 k
R2 = 180 k
R3 = 390 k
R4 = 330 Ω
R5 = 110 Ω (100 Ω + 10 Ω)
R6 = 10 Ω
B = 4.5 V battery
M = 100 $\mu$A instrument, $R_i$ = 1 k.

S1 = single pole, three way
S2 = four pole, two way
S3 = single pole, three way
S4 = single pole pushbutton
S5 = single pole on/off switch

# Current tests ensure IC-package orientation

by Sylvan E. Shulman
*Hughes Aircraft Co., Fullerton, Calif.*

The symmetry of integrated-circuit packages makes it all too easy to orient them incorrectly in fixtures of automated testing systems or on circuit boards. Even though dual in-line packages may accidentally be rotated 180° from their correct mounting positions and flat-packs may be rotated or flipped over, they may fit into a jig or board. Such misalignments cost time and money to trouble-shoot and rework, but faulty orientation of most transistor-transistor-logic circuits can be detected routinely by a nondestructive automated measurement.

These measurements are important because, at incoming inspection, the IC packages are loaded into a chute that feeds them to an automatic tester. If the package emerges in the wrong position, voltages applied to the wrong terminals cause wrong results and may damage the IC.

To realize the importance of testing a stuffed board, it's only necessary to remember that the possibility of an insertion error on a board rises exponentially with the number of ICs. If a board contains 40 ICs and the insertion error per IC is 1%, then the yield of good boards is $(99\%)^{40}$, or 66.8%. Therefore 33.2% of the boards contain an incorrectly inserted IC.

The technique for measuring IC orientation is based on the current paths furnished by the input clamp diode in more than 95% of all TTL circuits or the substrate diode between every transistor collector and ground. These diodes are shown as $D_1$ and $D_2$ in the typical TTL gate of Fig. 1. They can carry currents of not more than 100 milliamperes.

In Fig. 1, the integrated-circuit gate is not connected to any power supplies except a constant-current source. If the current source drives a 1-milliampere current through the IC from the ground terminal to an input terminal such as terminal 1, the voltage drop across those terminals is about 0.7 volt. This ground-to-input current flows through clamp diode $D_1$ and is shown as $I_1$ in Fig. 1. Similarly, if 1 milliampere is driven through the IC from the ground terminal to an output port, the voltage across the terminals is about the same. This current flows through the substrate diode $D_2$ and is $I_2$ in Fig. 1.

By contrast, if the constant-current source is connected to drive 1 milliampere from the $V_{CC}$ terminal to the input, that current, $I_3$, flows through a silicon-diffused re-

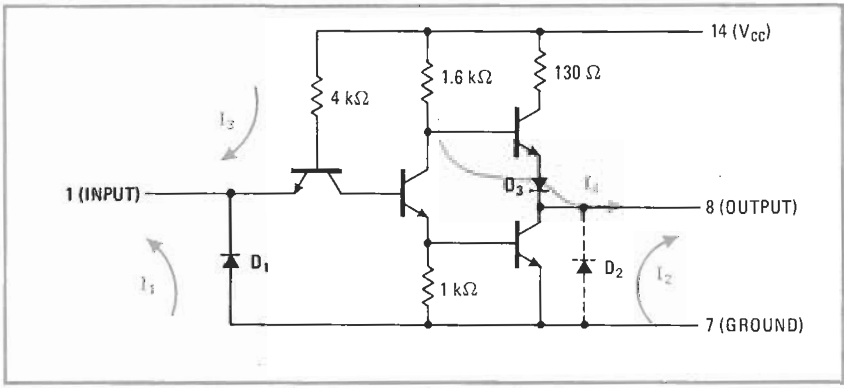

TERMINAL VOLTAGES FOR ORIENTATION TEST CURRENTS

| Current | Terminals | Level (mA) | Terminal voltage (V) |
|---|---|---|---|
| $I_1$ | Ground to input | 1 | 0.7 ± 30% |
| $I_2$ | Ground to output | 1 | 0.7 ± 30% |
| $I_3$ | $V_{CC}$ to input | 1 | 1.4 ± 20% |
| $I_4$ | $V_{CC}$ to output | 1 | 1.4 ± 20% |

**1. Current situation.** Current flow from supply terminal to input or output terminal of a typical TTL gate produces a voltage that is different from the voltage that is produced when current flows from ground to input or output, and this difference can be used to check IC orientation. The forward voltage drop across a base-to-emitter junction is about 0.7 volt; across a diode, it is about 0.55 V; and across a diffused resistor, it depends on current. One milliampere through the 4-kΩ resistor produces 0.7 V, but through the 1.6-kΩ resistor, 1 mA produces only 0.1 V.

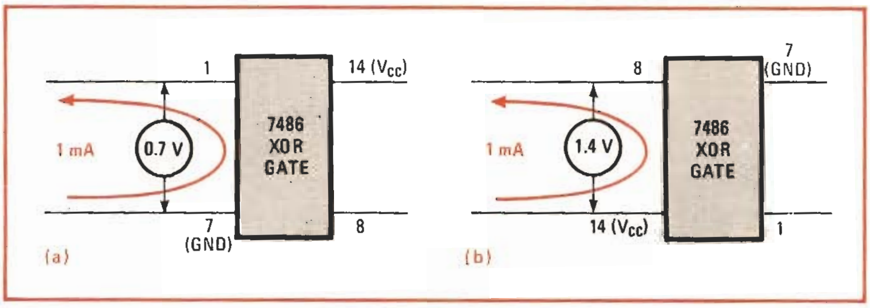

**2. Single IC.** Test set sends 1-mA current through left-corner terminals and monitors resulting voltage. If IC is positioned correctly, as at (a), terminal voltage is in range 0.49–0.91 V. If IC is incorrectly positioned, as at (b), the range is 1.12–1.68 V, so test station ejects unit without applying possibly damaging test voltages.

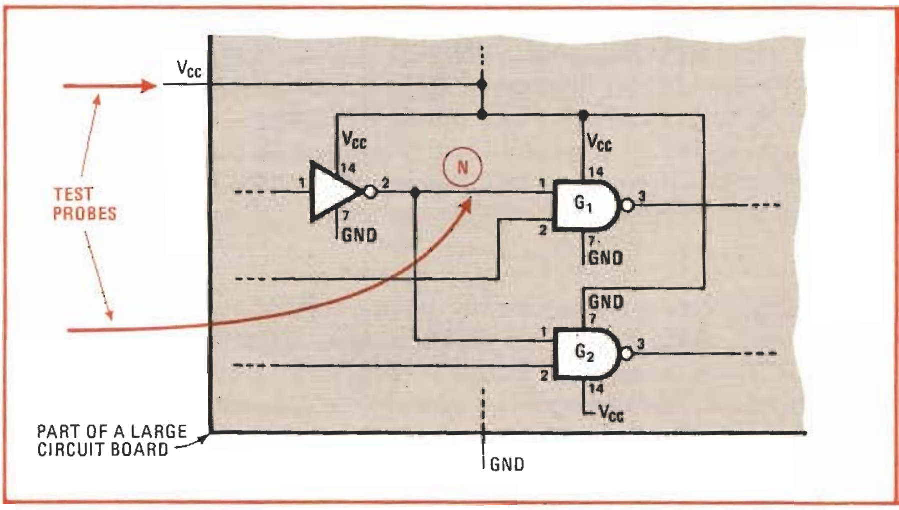

**CURRENT LEVELS FOR STUFFED-BOARD TESTS**

| IC inputs at node | IC outputs at node | Probe current (mA) | Expected voltage (V) |
|---|---|---|---|
| 1 | 0 | 1 | 1.4 |
| 2 | 0 | 1 | 1.4 |
| 3 | 0 | 2 | 1.4 |
| 4, 5 | 0 | 3 | 1.4 |
| 0 | 1 | 1 | 1.4 |
| 1 | 1 | 1 | 1.4 |
| 2 | 1 | 1 | 1.4 |
| 3 | 1 | 2 | 1.4 |
| 4, 5 | 1 | 3 | 1.4 |

**3. Stuffed board.** To check orientation of IC mounted on circuit board, probes connect current source to $V_{CC}$ terminal of board and to any node on the board. Voltage across probes is 1.4 V (±20%) if all packages are mounted properly. A lower voltage indicates that some IC is turned around or upside down—here, gate $G_2$ has its ground pin where its $V_{CC}$ pin should be, so voltage at probes is only 0.7 V. Table shows current-source levels that should be used in testing orientation of standard TTL integrated circuits; high-power TTL requires more current.

sistor as well as a base-to-emitter junction. Although the diffused resistor is labeled as 4 kilohms in the circuit diagram, its resistance is strongly dependent on the current level. At 1 mA, the drop across the resistor is about 0.7 V; this value is added to the 0.7-V drop through the base-emitter junction to make the voltage between the $V_{CC}$ and input terminals about 1.4 V.

Likewise, if the current $I_4$ from the $V_{CC}$ terminal to an output terminal is 1 mA, the voltage across the terminals is again about 1.4 V. In this case, the drop across the diffused resistor is on the order of 0.1 V. The base-emitter drop and diode drop add up to 1.3 V. (All of these voltage values are experimental results.)

For incoming inspection of ICs, when a unit slides out of the loading chute into an automated test fixture, the orientation of the package can be checked as shown in Fig. 2. The 1-mA current source is connected between the lower left terminal and the upper left terminal of the package, and the voltage across these terminals is measured. If the package is positioned properly, the current flow is from ground to input, and the voltage is 0.7 V. The test station can then power up the chip and measure performance characteristics.

If the IC has been loaded 180° out of position, the current flows from the power-supply terminal to an output, and the voltage is 1.4 V. When this too-high voltage is sensed, the tester ejects the IC into a bin for reloading.

A similar sort of test can ensure correct orientation of all the ICs mounted on a circuit board. The test fixture for this stuffed-board test must be a bed-of-nails arrangement that makes contact with every circuit node on the board. No power is applied to the board except a current source that drives current from the common $V_{CC}$ terminal to one or another node. The amount of current that the source must supply depends on how many inputs and/or outputs are connected to that node, as listed in the table of Fig. 3. The tabulated values are for conventional TTL ICs; high-power TTL requires larger currents. Correct orientations produce 1.4 V across the current-source terminals; if a package is misoriented so that current flows into its ground pin, the voltage is only 0.7 V.

Figure 3 shows a portion of a circuit board that contains a number of ICs, with the current source connected between $V_{CC}$ and node N. This node connects one output and two inputs, so the test current is 1 mA in accordance with the table, and the voltage drop from the $V_{CC}$ terminal to node N should be 1.4 V. However, gate 2 has been mounted incorrectly, with its ground pin and supply pins reversed. In this position, current flows from ground to the node, the voltage is only 0.7 V, and the go/no-go tester rejects the board.

Although the discussion here has been limited to TTL devices, the testing technique is also applicable to metal-oxide-semiconductor devices. ☐

---

Engineer's Notebook is a regular feature in Electronics. We invite readers to submit original design shortcuts, calculation aids, measurement and test techniques, and other ideas for saving engineering time or cost. We'll pay $50 for each item published.

# Feedback circuit measures beta at constant power dissipation

by H.P.D. Lanyon
*Worcester Polytechnic Institute, Worcester, Mass.*

Variations in the beta of a transistor (the ratio of collector current to base current) are often monitored by observing the common-emitter output characteristics on a curve tracer. This method has, for example, been used for routine monitoring of transistors of the same type and to determine the effect of a magnetic field on the operation of transistors. Unfortunately, systematic errors can arise, because the total power dissipated in the transistor depends on the value of beta. When ohmic heating is significant, the initial change in beta can change the junction temperature; this temperature change can then result in a further change in beta that may exceed the beta change from the original effect.

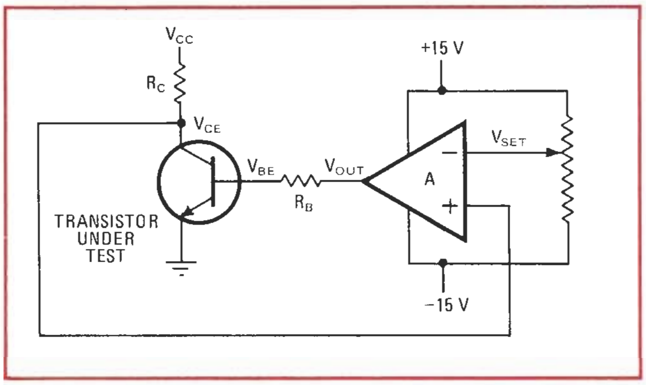

**1. Constant dissipation.** Basic circuit for measurement of beta with constant power dissipation in transistor uses op amp and feedback loop to hold $V_{CE}$ at $V_{set}$ and $I_C$ at $(V_{CC} - V_{set})/R_C$, so dissipation is fixed. Base drive changes if beta is changed by variation of test parameter, such as magnetic field.

The error can be removed by operating the transistor at constant power dissipation, rather than at constant base current as is done with a curve tracer. The two accompanying figures show simple circuits for measurement of beta at constant dissipation in low-power transistors and in high-power transistors, respectively.

The basic circuit shown in Fig. 1 can be used for low-power transistors. Operational amplifier A and its feedback loop maintain the transistor collector at a constant potential $V_{CE}$ that is equal to the $V_{set}$ of the potentiometer. This one control also sets the collector current at $(V_{CC} - V_{set})/R_C$, where $V_{CC}$ is the supply voltage and $R_C$ is the current-limiting resistor in the collector lead. Thus, to a close approximation, the power dissipated in the transistor is held constant at a value $(V_{CC} - V_{set}) \times V_{set}/R_C$.

The control is achieved by connecting the output of the amplifier to the transistor base through a resistance $R_B$. If $V_{out}$ is the output voltage of the amplifier and $V_{BE}$ is the base potential, the base current $I_B$ is equal to $V_{out} - V_{BE})/R_B$. Operation of the circuit can be illustrated by assuming that the beta of the transistor suddenly drops from its previous value. If the value of the base current does not change, this drop reduces the collector current, $\beta I_B$, and therefore increases the collector potential $V_{CE}$ from its previous value $V_{set}$. This shift in voltage level causes a non-zero differential input to the amplifier, thus increasing the magnitude of $V_{out}$. This in turn increases the base current to compensate for the original decrease in beta. The change in collector potential is reduced to negligible proportions because of the large differential gain of the amplifier. The power dissipated in the transistor is modified only because of the increase in base current. A straightforward analysis shows that the change is lower in the ratio $V_{BE}/\beta V_{CE}$ than it would have been in the absence of the feedback loop. In a typical silicon transistor with $V_{CE} = 12$ volts, $V_{BE} = 0.6$ v and $\beta = 100$, the power change with the feedback loop is only 1/2,000 of the power change with constant base drive.

The value of beta is found by measuring the voltages,

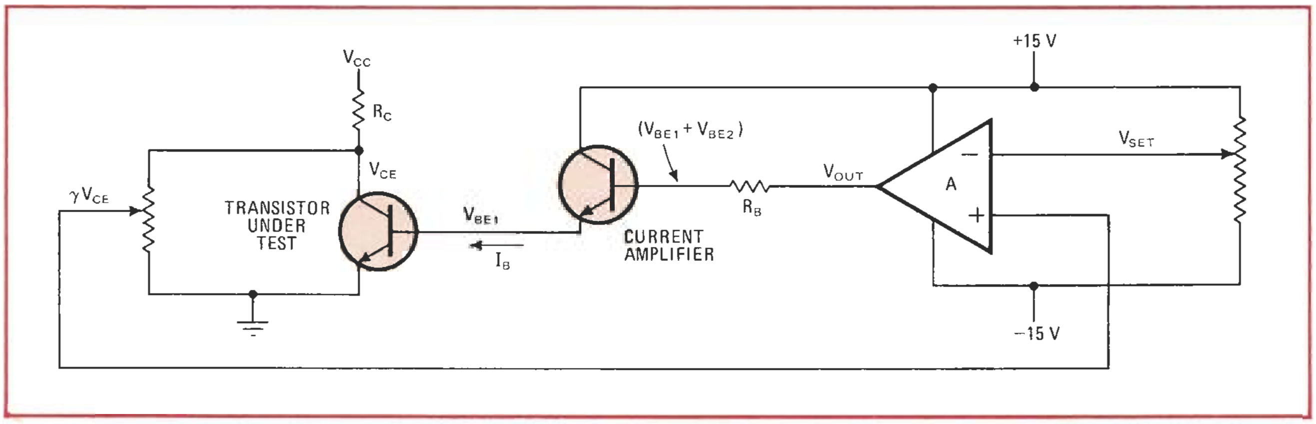

**2. Modified circuit.** For high-power transistors, feedback loop maintains a fraction of $V_{CE}$, $\gamma V_{CE}$, at $V_{set}$, allowing the operational amplifier to stay in its input common-mode range for large values of transistor voltage. The current amplifier can provide several amperes of base drive.

and changes in beta are reflected in the value of $V_{out}$ ($\beta$ is inversely proportional to $V_{out} - V_{BE}$). If the value of $R_B$ is chosen to give a $V_{out}$ of approximately 10 V, changes in $V_{BE}$ can be neglected. Thus

$$\beta = (R_B/R_C)(V_{CC} - V_{set})/V_{out}$$

The useful range of operation of the circuit of Fig. 1 is limited by the input common-mode range of the op amp. For a op amp operating with a ±15-V power supply, the differential gain becomes smaller when the common-mode voltage exceeds approximately 8 V. With a 40J op amp, common-mode voltage as high as 12 V can be tolerated. In the circuit of Fig. 1, the maximum permissible value of $V_{CE}$ can be extended to 27 V by referencing the emitter to the negative side of the amplifier power supply rather than the common ground. In this case, $V_{CE} = V_{set} + 15$ V. This modification also allows larger values of $R_B$ for a given base current and increases the system sensitivity to changes in beta. It cannot be used in power transistors when $V_{CE}$ may be several hundred volts and a base drive of several hundred milliamperes may be required—far in excess of the current-handling capabilities of most op amps.

The circuit in Fig. 2 shows how the original circuit may be modified to maintain constant power in such cases. Instead of the direct connection of $V_{CE}$ to the noninverting input of the operational amplifier, a fraction, $\gamma V_{CE}$, of this potential is tapped from a voltage divider chain to ground. The impedance level of this chain is kept high to minimize the current drain from the current flowing through $R_C$. A current amplifier is used in the base-drive circuit. In Fig. 2, an emitter follower is shown; the base current is given by the relationship $I_B = (V_{out} - V_{BE1} - V_{BE2}) \times A_I/R_B$, where $A_I$ is the current gain of the emitter follower and $V_{BE1}$ and $V_{BE2}$ are the base-emitter-junction voltages of the transistor under test and the current amplifier, respectively. Thus changes in beta are reflected in changes of $V_{out}$, as in the original circuit. □

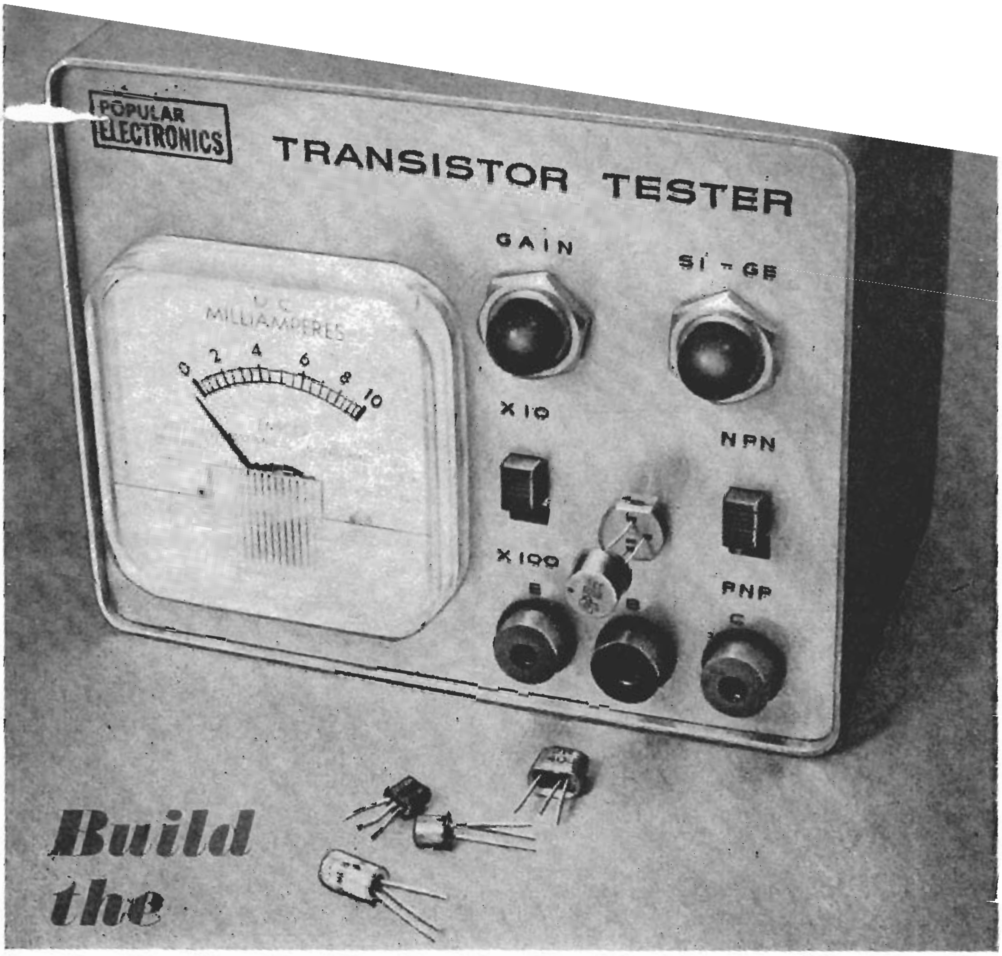

# Build the NGW Transistor Tester

STOP WONDERING—THE "NO-GUESS-WORK" TESTER CHECKS FOR SILICON-GERMANIUM AND NPN OR PNP

**BY DON LANCASTER**

HAVE YOU been tempted to buy package of those transistor assor ments that are being offered for on pennies-per-transistor? Perhaps y have some unmarked transistors ( transistors with production numbers t are meaningless to you) collecting c in your spare parts box. How can tell what types of transistors you l and what condition they are in? The swer is simple: build the transistor er described on the following pages.

This transistor tester is a simp strument that you can construct fo or less. It will check just abou transistor or semiconductor diode terelement shorts, opens and le and will check transistors for ga tester will tell you if a transisto test is *npn* or *pnp* and whether it is silicon or germanium.

**Construction.** The transistor tester's circuitry can be housed in any convenient size metal or plastic case, and since the parts arrangement is not critical, almost any type of chassis constructio can be used. The photo on page the method used in the prototype.

Since most transistors you are likely to test will have a TO-5 type case con-

## HOW IT WORKS

When a small amount of base current controls a large amount of collector current in a transistor, amplification takes place. In most modern transistors, d.c. current gain is essentially equal to the small-signal a.c. current gain all the way up to the low MHz region. This tester measures d.c. current gain by applying a known amount of base current to the test transistor, and then displays the collector current gain on meter *M1*. (When the collector current is divided by the base current, the result will be the d.c. gain of the transistor under test, and this is the figure that will be indicated on the meter.)

All transistors are tested under 1 to 10 mA collector current conditions—about the operating range of most small-signal transistors. Gain for power transistors will be lower than for small-signal types since the power transistor's gain curve peaks somewhere between 100 and 1000 mA. Resistor *R1* serves as a collector load—or current limiter—for all transistors under test, and *R2* and *R3* (when *S3* is set to *X100*) control base current.

Switch *S2* and diodes *D1* through *D4* form the *SI-GE* test circuit. For normal bias, the base voltage of a silicon transistor will be 0.6 volt and base voltage of a germanium transistor will be 0.2 volt. Two germanium diodes connected in series (*D1* through *D4* are germanium types) require 0.4 volt to conduct—a potential halfway between *GE* and *SI* base voltages. To eliminate complex switching, two germanium diodes are operated in each direction, providing *npn* and *pnp* testing capability.

Diodes are tested on a go/no-go basis when they are connected to the tester as described in "Testing Diodes" (see text).

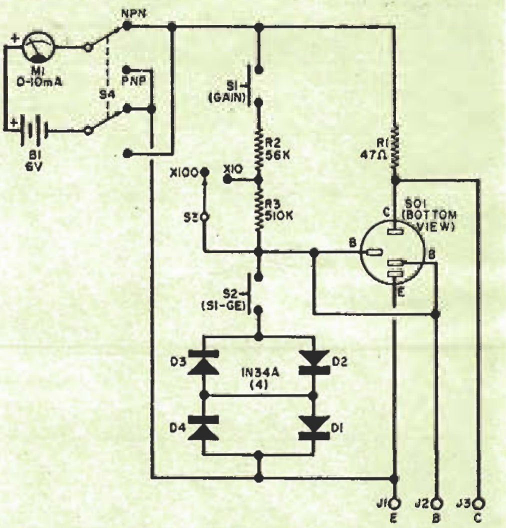

Note that there are two base contacts on SO1 to accommodate both the TO-5 triangular lead configuration and the older in-line arrangement.

### TESTING TRANSISTORS

1. Set multiplier switch to X100 and identity switch to NPN. Insert transistor into socket or connect transistor to appropriate leads
2. Meter should not deflect—if meter does deflect, discard transistor; it is shorted.
3. Depress SI-GE push button. If meter deflects, transistor is PNP. If meter does not deflect, transistor is NPN. If there is no meter reading in either position of identity switch, transistor can be discarded; it is open.
4. Change identity switch to proper position for type of transistor and note meter reading—it should be very low. Silicon transistors produce a zero reading; germanium transistors (non-power) will read less than 1 mA.
5. Depress GAIN push button and adjust multiple switch for less than full-scale reading. This reading is d.c. current gain of transistor (scale times multiplier).
6. Verify silicon/germanium transistors by depressing both GAIN and identity push buttons. If meter reading remains the same or drops slightly, transistor is germanium. Drop of meter reading to zero indicates silicon.

If you wish, you can cut out this convenient chart and paste it on the case of the transistor tester.

## PARTS LIST

*B1—Four 1.5-volt "AA" penlight cells*
*D1, D2, D3, D4—1N34A germanium diode*
*J1, J2, J3—Banana jack (one red, one blue, one green)*
*M1—0-10-mA d.c. milliammeter**
*R1—47-ohm, ½-watt resistor**
*R2—56,000-ohm, ½-watt resistor*
*R3—510,000-ohm, ½-watt resistor*
*S1, S2—S.p.s.t. momentary-action, normally-open push-button switch*
*S3—S.p.s.t. slide switch*
*S4—D.p.d.t. slide switch*
*SO1—TO-5 transistor socket*
*1—3" x 4" x 5" aluminum box—see text*
*Misc.—Double AA battery holders (2), external test leads (3), banana plugs (3), #10 nylon cup washers for feet (4), wire, solder, hardware, etc.*
*Optional—Metalphoto hard-anodized aluminum dialplate, available from Reill's Photo Finishing, 4627 N. 11th St., Phoenix, Ariz. 85014, in silver color for $2.75, in red, gold, or copper for $3.25, postpaid in U.S.A.; specify stock #TRT-1*

*The combined resistance of *R1* and *M1* should lie between 200 and 300 ohms.

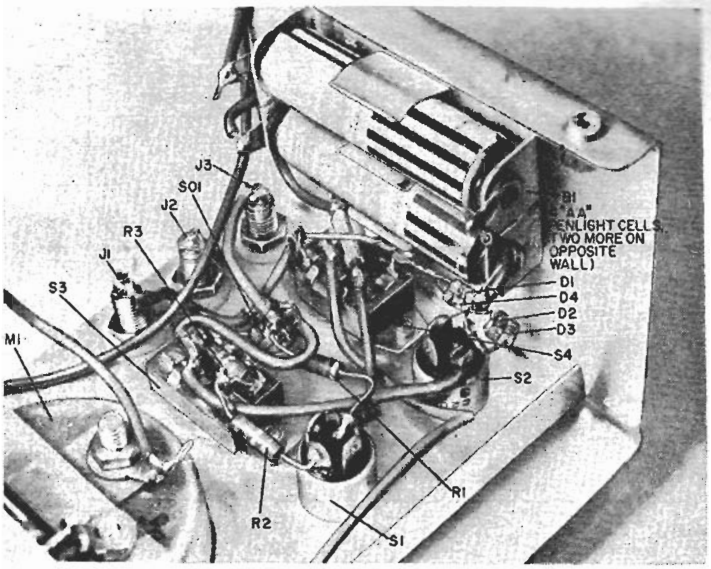

Internal layout of the author's model showing location of all parts. This layout is recommended for best duplication.

figuration, you should mount a TO-5 transistor socket in a convenient and accessible location on the front panel of the instrument (see photo on page 57). For transistors with other than a TO-5 case configuration, three banana jacks are mounted at the bottom of the front panel to make the proper connections via short test cables.

The banana jacks (*J1* through *J3* in the schematic diagram) must be insulated from the chassis, using one shoulder and one flat fiber or nylon washer with each jack.

**Testing Transistors.** The approach to testing a given transistor is simple and straightforward. The procedure need not take more than a minute, and with practice, you can cut the testing time down to a few seconds.

First set switches *S3* and *S4* to the *X100* and *NPN* positions, respectively, and connect the transistor to be tested via the external test cables or plug it into the transistor socket. If the pointer of meter *M1* should swing fully up-scale, the transistor is shorted; if the pointer does not deflect, the unit is okay.

(*Continued on page* 98)

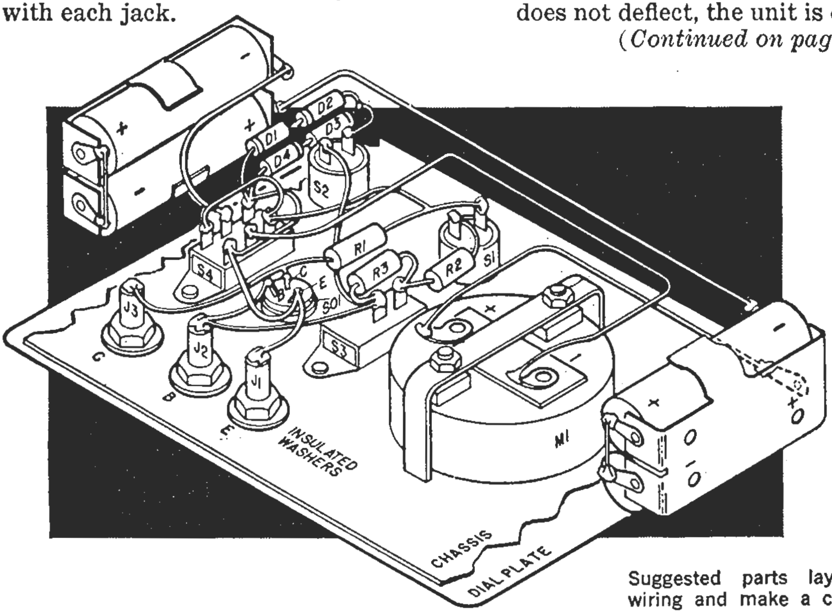

Suggested parts layout to simplify wiring and make a clean-looking unit.

# NGW TRANSISTOR TESTER

(*Conti*[illegible] *from page* 59)

Depress the *SI-GE* (*SI* for silicon and *GE* for germanium) switch (*S2*). If the meter pointer goes to full-scale deflection, the transistor is a *pnp* unit; if no deflection is observed, it is an *npn* unit. If the meter deflects, move switch *S4* to *PNP* and the pointer should return to zero. If no deflection is observed in either position of *S4*, the transistor is open.

With the *NPN-PNP* switch (*S4*) in the proper position, as determined above, read the transistor's leakage current. Leakage for a germanium transistor should generally be less than 1 mA, zero for silicon transistors. (Consult a transistor manual if you observe excessive leakage for germanium power transistors. Leakage in excess of 1 mA for some germanium transistors can be normal.)

Depress *GAIN* switch *S1*, and if the meter shows less than 1 mA, set *S3* to *X100*. Multiply the meter reading by the value indicated by the position of *S3*. This is the d.c. current gain of the transistor. No meter indication means that the transistor has an interelement open.

With *S1* closed, depress *S2*. If the meter pointer deflection remains the same or drops slightly, the transistor is a germanium unit. If the indication should drop to zero, the transistor is silicon. A simplified step-by-step testing procedure that can be pasted on the tester appears on page 58.

**Testing Diodes.** Connect the anode of the diode to be tested to the *C*ollector jack (*J3*); the cathode goes to the *E*mitter jack (*J1*). When *S4* is then set to *NPN*, the meter should deflect fully upscale. Now set *S4* to the *PNP* position; there should be no deflection. (Full-scale deflection is obtained in both positions of *S4* when the diode under test is shorted; there is no deflection when the diode is open.)

Zener diodes with less than 6 volts breakover potential ($E_{bo}$) will normally produce a slight meter indication when *S4* is set to *PNP*. The tester will *NOT* check tunnel diodes, trigger diodes, constant-current diodes, or four-layer diodes. –30–

# Op-amp circuit measures diode-junction capacitance

by D. Monticelli and T. Frederiksen
*National Semiconductor Corp., Santa Clara, Calif.*

For measuring the small-signal junction capacitance of a semiconductor diode, this simple circuit has two advantages over conventional capacitance bridges or meters. The ac test voltage is low enough to avoid excessive modulation of the diode's depletion layer. (Many conventional capacitance meters use such high ac voltages that their readings do not accurately represent the small-signal characteristics of the diode.) And a variable dc bias voltage can be applied to the diode, making the circuit more flexible.

As shown in Fig. 1, the diode is connected to the inverting input terminal of an LM324 operational amplifier, and ac and dc voltages are applied to the noninverting input terminal. The values of the input and output voltages, $v_i$ and $v_o$, are read on high-impedance voltmeters. The diode junction capacitance, $C_J$, is then

$$C_J = C_F (v_o - v_i)/v_i$$

where $C_F$ is the known value of the capacitance in the op-amp feedback loop. In the circuit shown here $C_F$ and $v_i$ have been made numerically equal (10 picofarads and 10 millivolts, respectively), so

$$C_J = (v_o - v_i)\, pF/mV$$

The dc voltage, $V_D$, that is applied to the noninverting terminal can be varied through the range from 13 volts to −1 V by means of potentiometer $R_1$. As a result of the feedback, this voltage appears at the inverting input and is impressed across the diode to provide any value of reverse bias from −13 V to the verge of conduction. The ac input voltage, $v_i$, is made small to avoid excessive modulation of the junction's depletion layer; 10 millivolts rms is a good value. Voltage $v_i$ is also impressed across the diode through the action of the op amp. $C_F$ and $C_J$ then make up a simple ac voltage divider so that $C_J = C_F (v_o - v_i)/v_i$.

Feedback resistor $R_F$ provides a path for the input-bias current of the LM324 (typically 45 nanoamperes), which allows the amplifier to impress $V_D$ across the diode. In doing so, it offsets the dc-output voltage slightly, but does not affect operation. The actual dc-output voltage is given by $V_O = V_D - I_b R_F$. $R_F$ must be chosen carefully; too large a value offsets $V_O$ excessively, and too small a value (relative to the reactance of $C_F$ at the operating frequency) introduces phase shift.

When $i_F$ is out of phase with $i_X$, the simple capacitive divider relation does not hold, and phasor relationships must be considered. A value of 10 megohms for $R_F$ is practical if the frequency is about 100 kilohertz because the reactance of even a 10-picofarad $C_F$ is only 160 kilohms and gives a phase error of only 1°. Furthermore, the real part of the 324's input impedance shunts $C_J$ slightly and phase-shifts the diode current $i_X$ in the direction of $i_F$, thereby minimizing the phase difference between the two currents.

To achieve good results in measuring small values of capacitance, the parasitic capacitance $C_P$ that shunts $C_J$ must be accurately known. The parasitic capacitance consists of stray capacitance $C_{STRAY}$ and the input capacitance of the LM324 op amp $C_{IN}$. The $C_{STRAY}$, lead and socket capacitance, is independent of $V_D$. The input

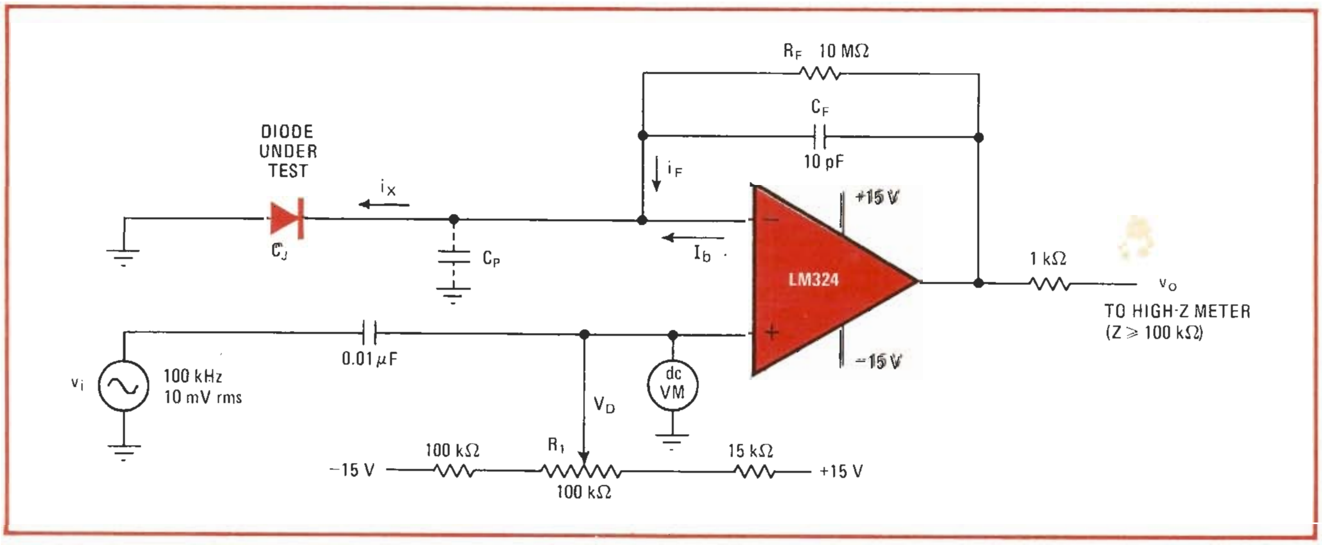

**1. Measuring capacitance.** Junction capacitance of a semiconductor diode is measured as a function of dc-bias voltage in this circuit. Diode is connected to inverting input terminal of LM324 operational amplifier, and dc-bias and ac-test voltages are applied to noninverting input terminal. Low ac test voltage avoids excessive modulation of depletion layer, for accurate measure of small-signal junction capacitance.

capacitance of the 324 is dependent on $V_D$ ($C_{IN}$ typically is 0.[illegible] to 0.75 pF for common-mode voltages of 5 to 20 V). Fortunately $C_{STRAY}$ usually dominates. Operating the 324 with positive and negative supplies while simultaneously restricting the input voltage to −1 V on the low end of the $V_D$ range reduces the voltage dependence of $C_{IN}$. In the authors' circuit, $C_P$ measured 3.55 pF with $V_D = -1$ V and 3.45 pF with $V_D = 13$ V. A differential measuring technique, first measuring $C_P$ with the diode out of the circuit and then measuring ($C_P + C_J$) with the diode in, gives the best results. $C_F$ should be a low-tolerance capacitor (a good silver-mica was used by the authors). The pin-to-pin parasitic capacitance of the LM324 that shunts CF is negligible if the board layout minimizes adjacent lead length between the inverting and output pins.

Figure 2 shows a plot of junction capacitance in relation to reverse bias for a 1N914 diode as measured by the circuit in Fig. 1.

Those who want a self-contained unit can use the remaining three op amps in the quad LM324 package plus two additional amps from the dual LM358; both will operate from +9-V and -9-V batteries because of their small current drain. One amplifier can be wired as a Wien-bridge oscillator to supply $v_i$, while two others can peak-detect voltages $v_i$ and $v_o$. These peak-detected voltages can then be differenced by a fourth amplifier, and a fifth amplifier can be used to drive a 1-mA meter for a direct reading of capacitance in picofarads. A pot in the noninverting leg of the difference amplifier can be used to offset-null the $C_{STRAY}$ of the circuit. ☐

**2. Result.** Junction capacitance of 1N914 diode as a function of reverse bias is measured with circuit shown in Fig. 1. Data sheets do not provide all the information on $C_J$ that is sometimes needed. Conventional capacitance meters use ac voltages that are too high for small-signal measurements and do not provide adjustable dc bias.

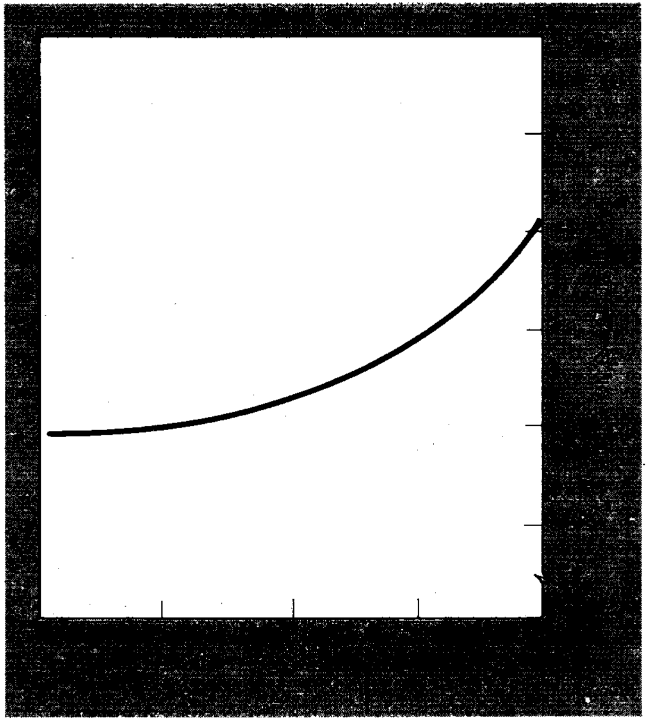

***Here's that piece of dream test equipment that can tell you if a digital logic IC is good or bad—section by section***

# Build R-E's Digital IC Tester

by JACK CAZES

HAVE YOU EVER WISHED YOU HAD A fast, easy way to test the surplus digital IC's in your spare parts collection? Have you wanted to check an IC *in-circuit,* under actual operating conditions? Wouldn't it be great to be able to monitor the logic states at several points on a digital circuit board . . . even supply power to the board from an external source?

The DIGI-DYNA-CHECK is a truly dynamic digital integrated circuit checker that can be used to test digital IC's under actual operating conditions; it can be made to perform just as though it were functioning in an actual circuit. Tests can be performed both in- and out-of-circuit. A 5-volt regulated supply, capable of delivering up to 1 amp, is available within the DIGI-DYNA-CHECK to "fire up" fifteen or more IC's on a circuit board via an adapter cable with its miniature IC connecting clip.

An internal "bounceless" pushbutton, mounted on the front panel, can be used to advance counters, dividers, shift registers, etc., one step at a time. If desired, such IC's can be put through their paces automatically at a rate suitable for observing with an oscilloscope. This automatic mode of operation is available via an internal 50-kHz conditioned clock with complementary outputs.

Connections to "the outside world", ie., to equipment external to the DIGI-DYNA-CHECK, such as a scope, other voltage sources, oscillators, etc., are easily made via eight 5-way binding posts mounted on the front panel. Any internal or externally available function can be patched to any pin or combination of pins on the integrated circuit under test by means of the matrix programmer in the DIGI-DYNA-CHECK."

The heart of the checker is a 20-slider by 10-position matrix switch that is used to program the internal and/or external functions and logic levels for the IC under test. Another article will describe, in great detail, the programming and test procedures employed for a variety of digital integrated circuit types.

A schematic of the matrix switch used in the DIGI-DYNA-CHECK is in Fig. 1. It shows the connections between the various functions and the pins of the IC being tested. Basically, it consists of twenty 10-position slide switches mounted together in a single frame, with corresponding positions on all switches wired together. Thus, when two or more *sliders* are in the same *position,* they are connected internally. Additionally, each *slider* has a "home" or neutral *position* (no connection to any other slider).

The first sixteen *sliders* are connected to the correspondingly numbered pins of a 16-pin DIP (see Fig. 2) IC test socket and to sixteen lamp-driver assemblies used to monitor logic levels present at all sixteen IC pins *simultaneously*. The remaining four *sliders*, marked **W, X, Y,** and **Z** in Fig. 1, are wired to four similarly marked 5-way binding posts. Six of the matrix *positions* are connected internally to ground (logical **0**), +5 volts (logical **1**), the two complementary "step" functions, and the two complementary "clock" functions. The remaining four matrix *positions* are brought out to 5-way binding posts marked **A, B, C,** and **D.** This provides a 4 X 4 matrix (**ABCD** by **WXYZ**) that can be used for making a variety of special test connections, both internal and external to the DIGI-DYNA-CHECK.

Two power supplies are built into the checker. A regulated, highly filtered 5-volt supply capable of delivering up to 1 amp, continuously, is used to power the internal step and clock circuits (Fig. 4), and to supply $V_{cc}$ and logic **1** level voltage to the integrated circuit under test. The regulated supply can also be used to provide power to a board containing many IC's for in-circuit tests. A filtered, but unregulated 5-volt supply provides power to the lamps and their

**PARTS LIST**

**All resistors ½-watt 10% unless noted**

R1—150 ohms
R2—220 ohms
R3, R4—100 ohms
R5—100 ohms, Trimpot
R6, R7, R8, R9, R10, R12, R14—100 ohms, ¼ watt
R11, R13, R15 thru R30—22,000 ohms, ¼ watt
C1—6000 μF, 15V, electrolytic
C2, C3—0.01 μF, 100V
C4—1000 μF, 15V, electrolytic
D1, D2, D3—1N914 or 1N4148
D4, D5—1N4001 or similar (1A, 50V)
Rectifier Bridge—full wave, 1A, 100V PIV
IC1—SN-7400 (quad 2-input NAND gates)
BP1 thru BP16—5-way binding posts, insulated
LM1 thru LM7—4V, 50mA miniature lamp assembly
Q1—TIP-3055
Q2 thru Q36—2N5129
Matrix Switch (S1 thru S20)—20-pole 10-position (Part C10-42A, Cherry Electric Co., 1650 Old Deerfield Road, Highland Park, Ill. 60035)
S21—spst miniature toggle
S22—spdt miniature toggle
Miscellaneous parts:
16-pin DIP test sockets (2)
16-pin DIP test plug
16-pin DIP test clip
16-lead ribbon cable (2½ feet)
PC board
Perf board with 0.1-inch hole spacing
Heat sink for TIP-3055 transistor
Case

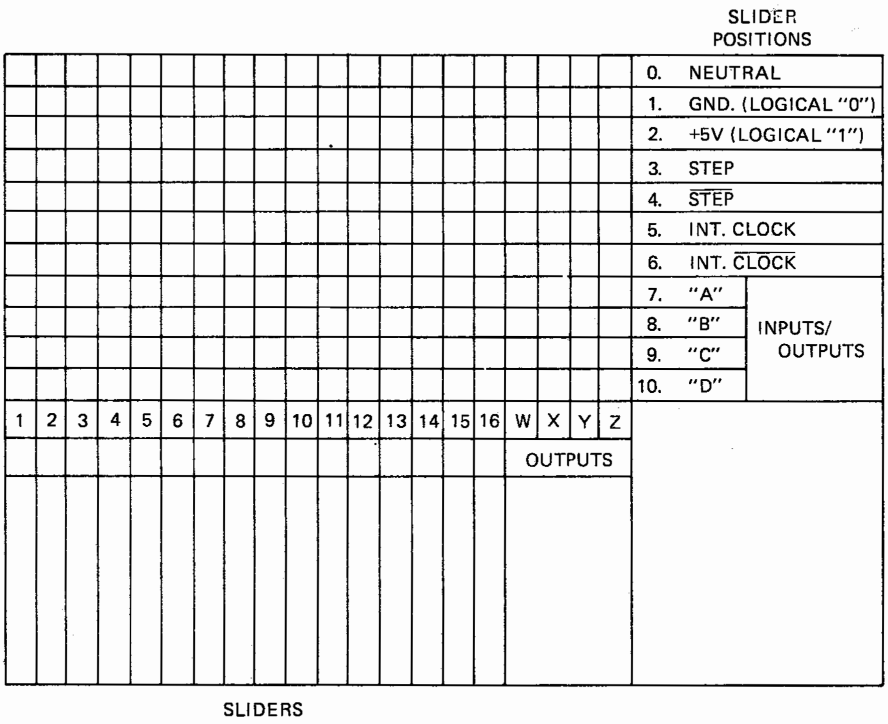

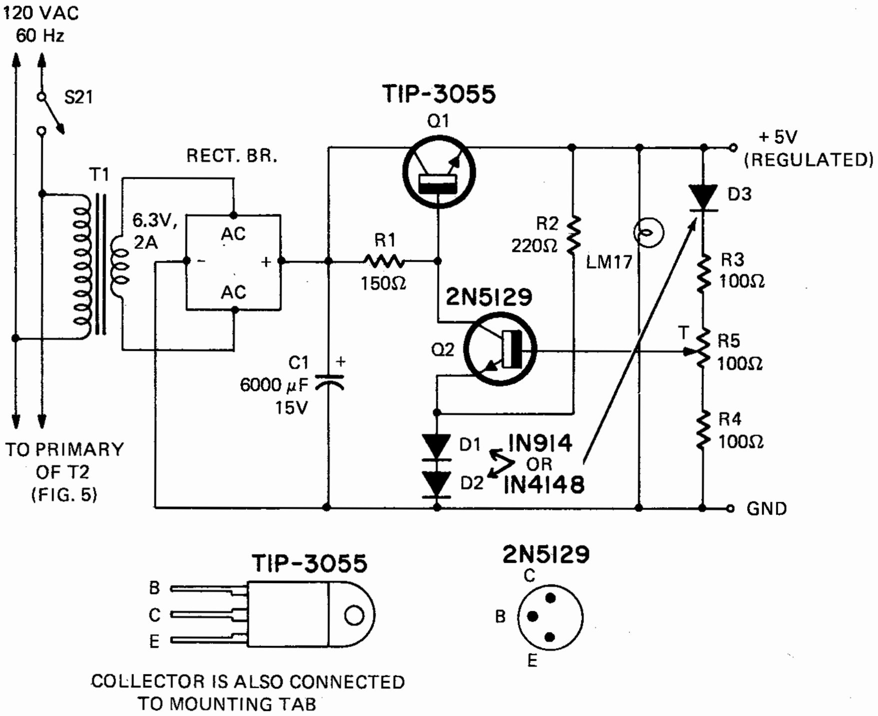

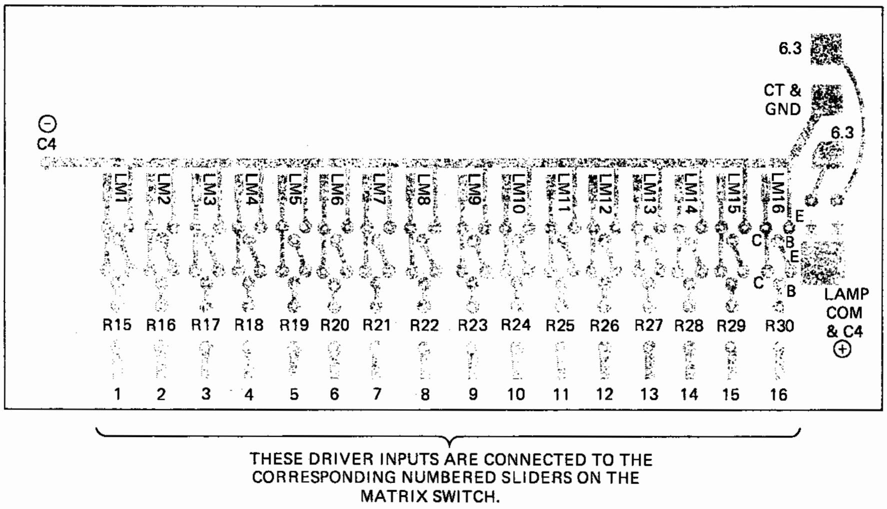

**FIG. 1 (top)—MATRIX SWITCH layout. See cover photo for 14- and 16-pin DIP settings. FIG. 3—POWER SUPPLY for 5 volts regulated to step and clock circuits and the IC under test. FIG. 7-b (right)—PARTS LAYOUT for lamp-driver board. The C-B-E terminals at right are for Q35 and Q36. Transistor pairs Q5—Q6 through Q33—Q34 are positioned from left to right.**

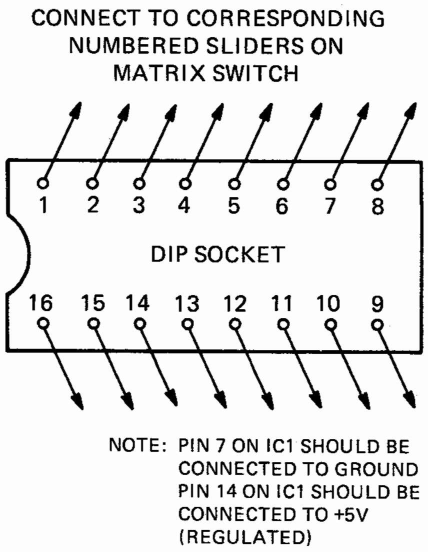

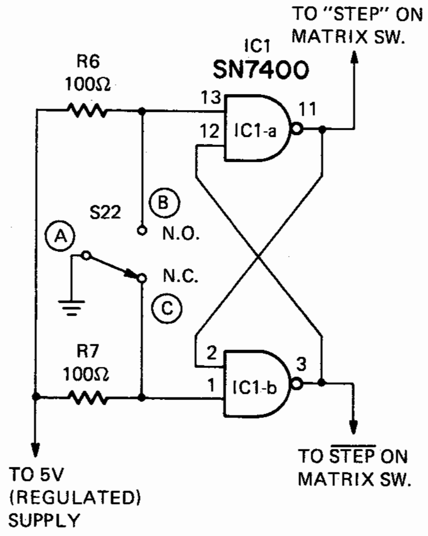

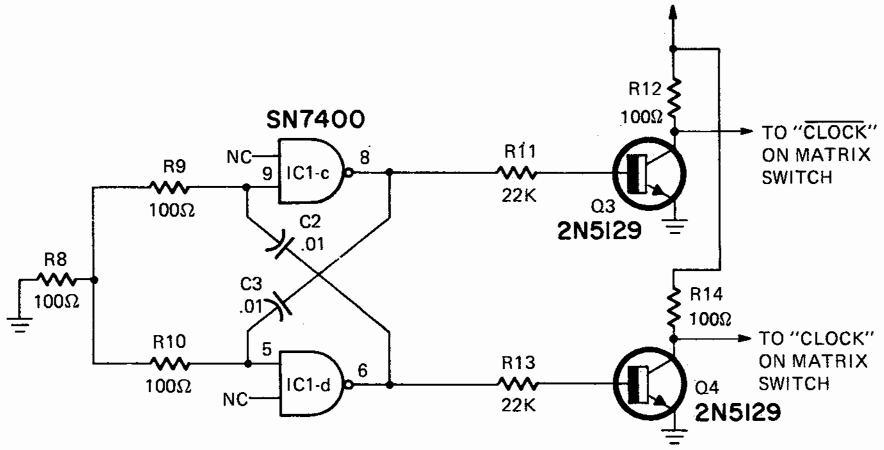

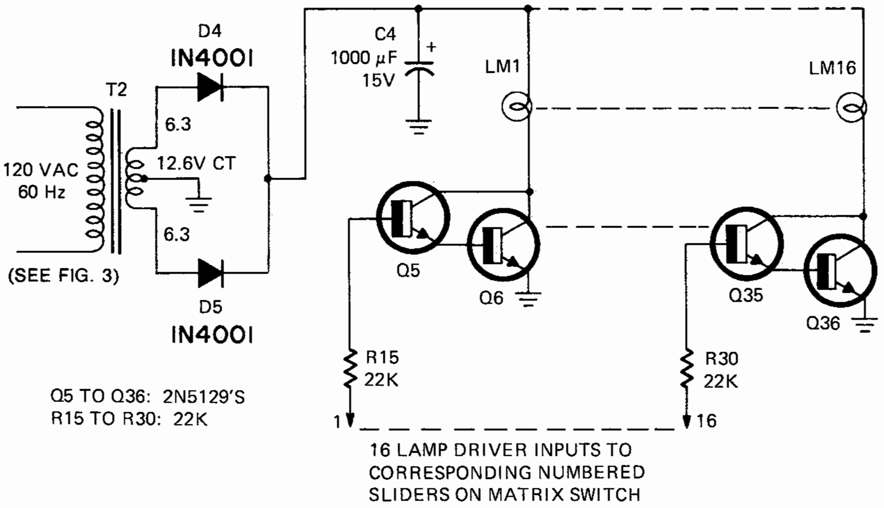

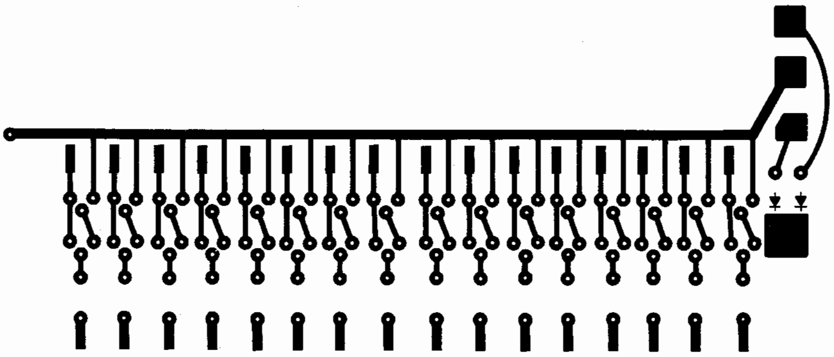

associated driver circuits. This is shown in Fig. 5.

The stepping circuit is merely an electronic contact bounce eliminator. Solid metal switch contacts are inherently noisy and must be conditioned when used with high-speed solid-state circuits. An s.p.d.t. momentary pushbutton switch (S22 in Fig. 6) is connected to a basic NAND gate memory circuit. In the position shown, the output of IC1-a is at logical **0** level, while that of IC1-b is a logical **1**. Noisy, multiple contacts with **C**, as the switch moves toward **B**, has no effect on the outputs; the gates cannot change state until gate 1-a input is at **0** level. This occurs only at the time when the switch first contacts B. The output of IC1-a then swithces over to **1** and output of IC1-b switches over to **0**. Once these levels have been established in the manner described, they are not affected by further "make" and "break" movements of the switch (contact bounce) at **B**. Complementary outputs are available from this circuit. The STEP output is initially at logical **0** and produces a fast rise transition to logical **1** and then rapidly back to **0** when the pushbutton is depressed and released. The converse is true for the STEP (called NOT STEP) output. Both of these complementary functions are useful for testing digital IC's.

The clock circuit shown in Fig. 4 is an astable multivibrator made up of the two remaining NAND gates of IC1 (an SN-7400). The values of the gate input-sinking resistors (R8, R9, and R10) were chosen to maintain the gate input levels near the logic threshold. In this way, as C2 and C3 charge and discharge, the gate input levels oscillate above and below the threshold level. This results in the gate outputs oscillating in a complementary manner. The frequency of oscillation is determined primarily by the values of C2 and C3 according to the equation

$$\text{Frequency} = \frac{1}{2(R8 + R9) \cdot C}$$

where C = C2 = C3 and R9 = R10. The component values shown in Fig. 4 result in a frequency of approximately 50 kHz. Some fine adjustment can be made by varying R8. A pair of transistor amplifiers (Q3 and Q4) is used at the complementary outputs to provide more than adequate power to drive sev-

**FIG. 2 (top left)—IC SOCKET TERMINALS are wired to matrix switches on instrument panel. FIG. 4 (second from top)—INTERNAL CLOCK is a free-running multivibrator. FIG. 5 (third from top)—LAMP DRIVERS are Darlington pairs to reduce loading on IC under test. FIG. 6 (top right)—STEP SWITCH with electronics added to eliminate effects of contact bounce. FIG. 7-a (left)—FOIL PATTERN for lamp driver. Enlarge so foil is 7½ inches across at widest point.**

eral IC loads simultaneously. This is especially important where in-circuit testing is to be performed on a board that contains a multiplicity of IC's.

Sixteen lamp readouts continuously monitor the logic condition simultaneously at all pins of an IC under test. A voltage level above approximately 1.4 volts will cause a lamp to turn on, indicating a logical **1** level. Darlington-pair transistor amplifiers are employed as lamp drivers so that the IC under test cannot be overloaded by the lamp monitors. The selection of 1.4 volts as the threshold level permits the lamps to indicate properly logic levels for most RTL, DTL, TTL, and MOS digital integrated circuits. However, see the second article in this series for special precautions involving RTL IC tests. The lamp-driver circuits are shown in Fig. 5.

## Mechanical construction

The author's prototype of the DIGI-DYNA-CHECK was assembled in the home-made sloping-front aluminum case shown in Fig. 8. Although case design and front-panel layout are not essential to the proper functioning of the tester, the arrangement shown offers convenience in use. Alternatively, a commercially available box of any design can be used, provided it is large enough to house all of the components.

Drill and punch the front panel to accept those components that will be mounted directly to it. These include the DIP test socket, the matrix switch, the readout lamps, pilot lamp and power switch, step button, and the 5-way binding posts. Rectangular openings can be cut out either with a nibbling tool or with a Bernz cutter. Several holes will also have to be drilled in the rear apron of the case to accommodate the line cord with its strain relief bushing, the two power transformers, and two pairs of L-brackets for the two circuit boards containing the lamp drivers, the 5-volt supplies, and the STEP and CLOCK circuits. The case can now be painted and lettering applied. Dry-transfer letters are particularly well suited for this job. It makes the checker more convenient to use if two different colors are used to number the test socket, lamp readouts, and matrix sliders to differentiate between the leads of 14-pin and 16-pin DIP integrated circuits as shown in the cover photo.

All components except the two circuit boards can now be mounted in the case.

## Wiring the tester

The two circuit boards should be prepared and wired first. Then put them aside until all other wiring has been completed. Either copper-clad PC boards or perforated board construction can be used, as wiring layout is not critical. The foil pattern in Fig. 7-a corresponds to the schematic for the lamp drivers. Since there are sixteen identical driver circuits involved, the handwiring approach would be tedious here. This foil pattern also includes the unregulated 5-volt supply of Fig. 5. The ac input to this board is from the secondary of T2, mounted at one end of the rear apron next to T1. Do not connect the power to this board until it is ready to be mounted to the case. Connect one end of a 16-lead cable to the sixteen inputs of the driver circuits on this board. Number the leads at the other end of this cable. They will be connected later to the matrix switch.

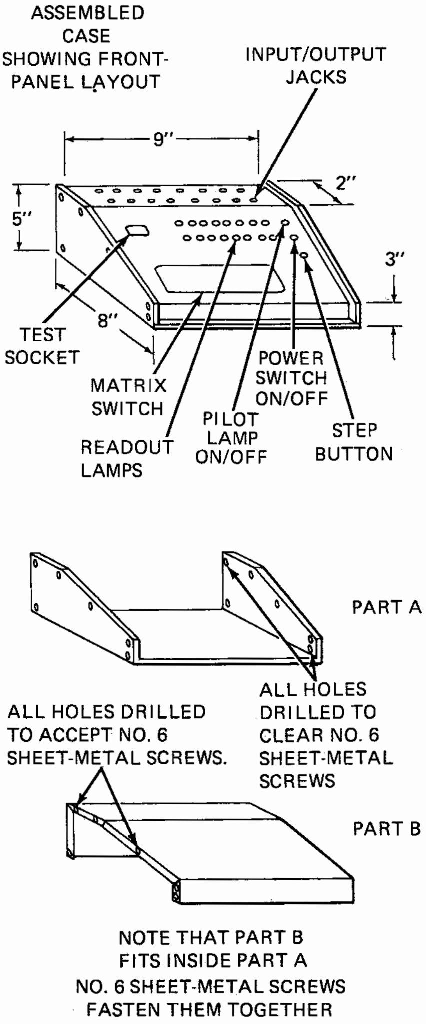

**FIG. 8—SLOPING-FRONT INSTRUMENT CASE, its dimensions, construction and how the two parts are fitted and joined together.**

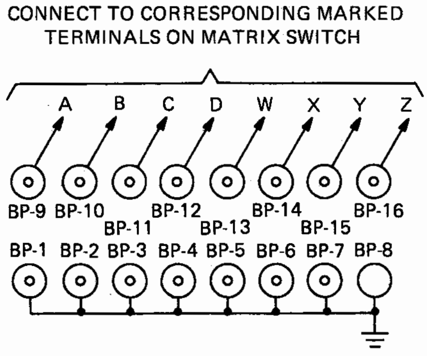

**FIG. 9—BINDING POSTS are mounted across the top of the case and connected to the matrix circuitry as indicated.**

Next, prepare the board containing the regulated 5-volt supply and the STEP and CLOCK circuits. A perforated board with 0.1 inch hole spacings was used in the author's model. This hole spacing readily accommodates the pins on the socket into which IC-1 will be inserted. Follow the schematics in Figs. 2, 3, and 4, making certain that all +5-volt points are tied together, and all grounds are tied together. Wire the line cord, pilot lamp, power switch, and transformer primaries as shown. Now plug IC-1 into its socket.

The 5-way binding posts (BP1 to BP16) should now be wired according to Fig. 9. The ground bus joining BP1 thru BP8 should be connected to matrix switch *position* 1. The remaining eight binding posts can then be connected to their respective *sliders* (**W** thru **Z**) and *positions* (**A** thru **D**) on the matrix switch.

Connect one end of a 16-lead cable to the sixteen contacts of the DIP test socket. Number the leads at the other end of the cable to correspond with the socket contacts. This end will be wired later to the matrix switch together with the correspondingly numbered leads on the cable that was previously connected to the lamp driver board.

Wire the miniature lamps (mounted on the front panel) to the sixteen output pads on the driver board. One lead from each lamp should be connected to a common +5-volt tie point on the board. This board can now be mounted to the rear apron of the case with two L-brackets. Connect the secondary leads from T2 to the proper locations on the board.

Connect the two 16-conductor cables (from the DIP test socket and from the lamp driver board) to the matrix switch. Be sure that all leads go to correspondingly numbered *sliders* on the matrix switch. Thus, the lead from pin No. 1 on the test socket and the lead from input No. 1 on the lamp driver board should both be connected to *slider* No. 1 on the matrix switch, etc.

The perf-board can now be mounted on the rear apron of the case, just above and parallel to the driver board. Solder the secondary leads from T1 to the perf-board. Now, connect the +5-volt (regulated), ground, clock, clock, step, and step outputs from the perf-board to their respective *position* terminals on the matrix board.

Finally, connect the ground terminal from the lamp driver board to the ground terminal on the matrix switch (*position* 1).

Construct an adapter cable as shown in Fig. 10. This will be used for in-circuit testing of integrated circuits.

*(continued on page 85)*

## IC TESTER

*(continued from page 36)*

### Testing

Plug the Digi-Dyna-Check into a 120-volt, 60-Hz supply and turn on the power switch. Adjust R5 on the perfboard to obtain *exactly* 5 volts at the output of the regulated power supply. This should be measured with a VTVM, an FET input voltmeter, or other similar high input-impedance device. With all matrix *sliders* in the neutral *position,* only the pilot lamp should be on. Move *sliders* 1 thru 20 to *position* 1 (ground). None of the lamps should light. All IC test socket pins and binding posts **W** thru **Z** should be shorted together and at ground level. (Check with an ohmmeter). Move all *sliders* to *position* 2 (+5V). All sixteen readouts should be on. All DIP test socket pins and binding posts **W** thru **Z** should be at +5-volts. Move all *sliders* to *position* 3 (Step). All socket pins should be at logical **0** together with binding posts **W** thru **Z.** Depressing the STEP button should cause all lamps to turn on and bring all socket pins and binding posts **W** thru **Z** to logical **1.** Releasing the STEP button should return everything to their initial states. Move all *sliders* to *position* 4 (Step). Everything should behave as the inverse of that described for position 3. Move all *sliders* to *position* 5 (Clock). All lamps should glow at half brilliance due to the 50% duty cycle of the square wave clock output. A 50 kHz square wave should be present at all DIP test socket pins and at binding posts W thru Z. With all *sliders* at *position* 6 (Clock) you should see the inverse of that observed for position 5. Wave forms in positions 5 and 6 can be observed with a scope at binding posts W thru Z. Moving any of the *sliders* to any of the four *positions* 7 thru 10 should connect their corresponding circuits to binding posts A thru D, respectively.

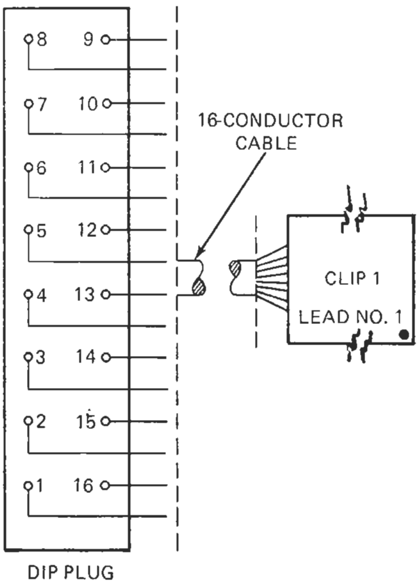

**FIG. 10—ADAPTER CABLE consists of 16-pin plug and clamp and is used for in-circuit testing of DIP-type integrated circuits.**

If everything described here checks out A-OK, you're ready to use your Digi-Dyna-Check to check IC's. **R-E**

---

**BUILD A SOLID-STATE LASER**

Our June cover feature presents complete construction details of a solid-state laser. It's both easy and inexpensive to build. If you've been waiting for a low-cost low-power "safe" laser to experiment with you won't want to miss the June issue of **Radio-Electronics.**

---

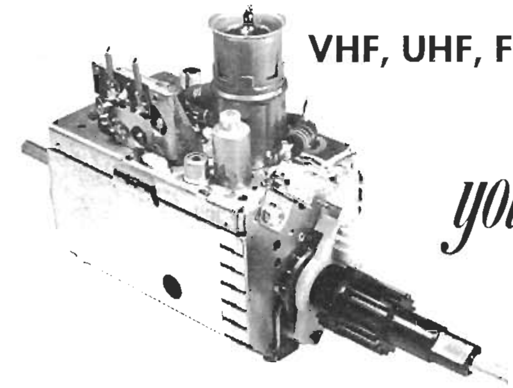

*Identifies leads on unknown transistors, indicates PNP or NPN polarity, and shows up bad devices*

### BUILD THE

# TRANSISTOR IDENTOMETER

### BY JOHN T. BAILEY

MOST experimenters have a drawer full of unidentified transistors which are of little use unless the leads and type (pnp or npn) can be determined. Actually, that's the only really important information needed to apply a transistor in a circuit—assuming it is "good" to begin with. Of course, it's nice to know what the transistor's beta is, but this is not essential in many applications.

The Identometer was designed to provide a quick check of a transistor's leads and type. It operates on the basis that bipolar transistors will operate, but poorly, if the emitter and collector leads are interchanged without also reversing the power supply. Since a transistor has three leads, it is possible to connect them in six different ways. With a transistor plugged into the test circuit, the Identometer has a switch to make the six different connections. When the right one is selected, an indicator light comes on. The light also tells whether the unit is npn or pnp.

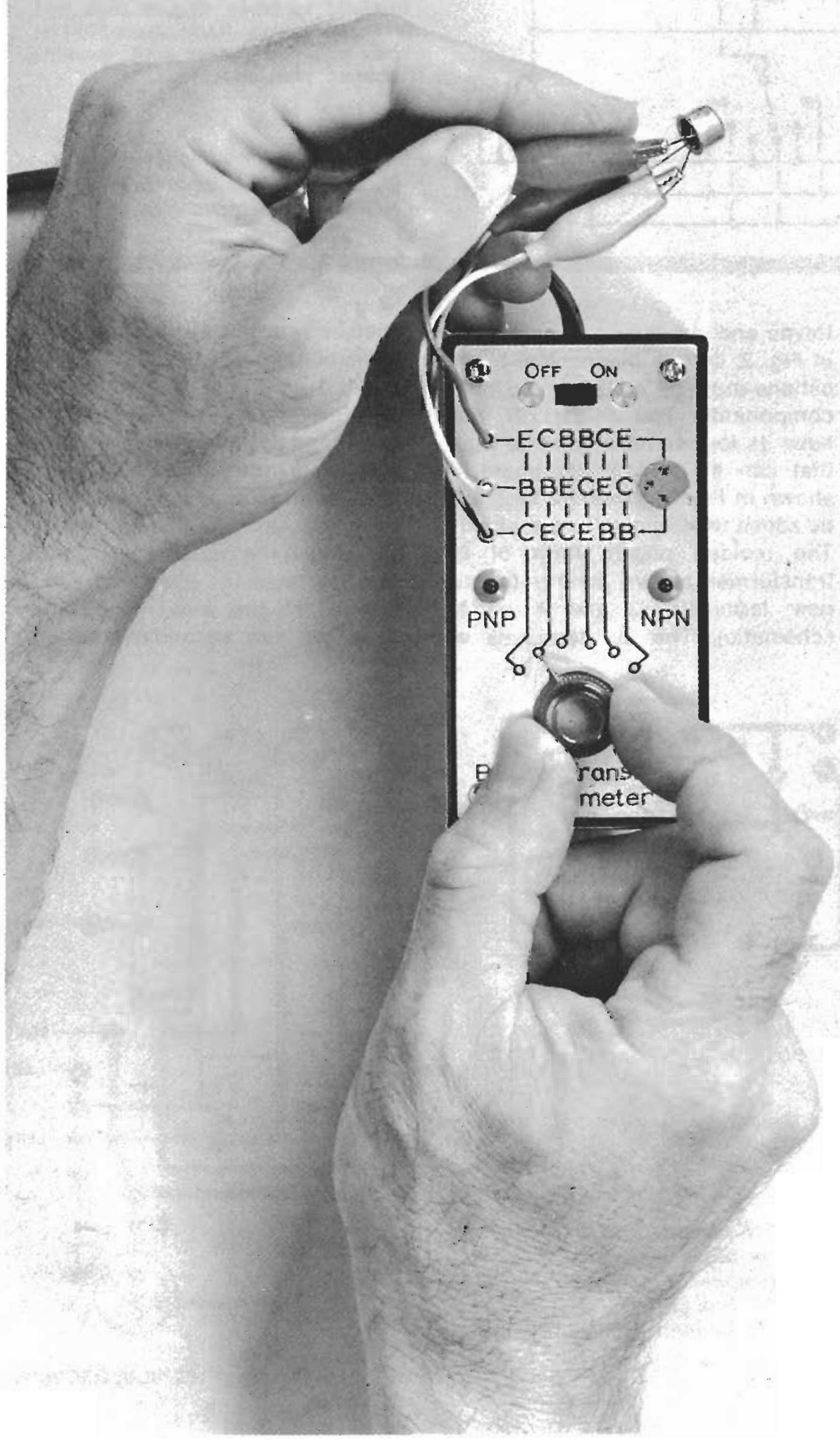

**Circuit Operation.** A schematic of the circuit is shown in Fig. 1. Note that *T1* has two secondaries, one serving as the power supply for the *Q1-LED1* and *Q2-LED2* circuits and the other for the unknown transistor. Transistor *Q1* saturates when the upper secondary voltage is in the positive half cycle and its base is positive. Transistor *Q2* saturates when its collector has a negative voltage and its base is negative. The two transformer secondaries must be in phase as shown by the small dots at terminals 1 and 3.

The circuit is equivalent to an exclusive OR logic device, which has an output only when the two inputs are at different levels. The high or low signal requirements are provided by the transistor being tested and the instantaneous polarity of the ac line at the moment. The combination is one polarity for npn transistors and the opposite polarity for pnp types.

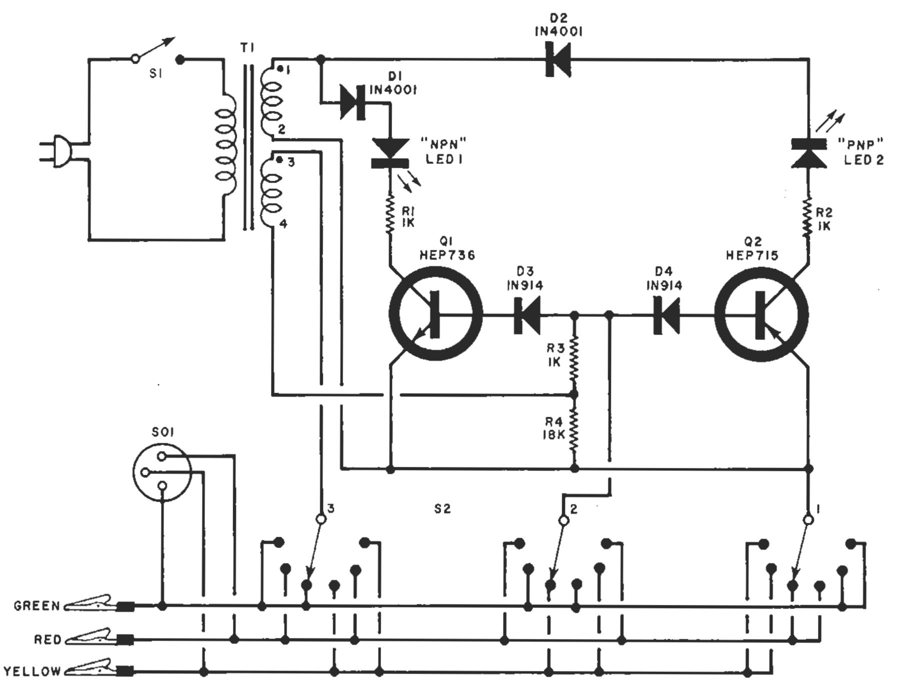

## PARTS LISTS

D1, D2—1N4001 diode
D3, D4—1N914 diode
LED1, LED2—Light-emitting diode (Calectro K4-559 or similar)
Q1—HEP736 transistor
Q2—HEP715 transistor
R1-R3—1000-ohm, ½-watt resistor
R4—18,000-ohm, ½-watt resistor
S1—Spst switch
S2—3-pole, 6-position rotary switch (Mallory 3236J or similar)
SO1—Molded transistor socket
T1—12-volt, 300-mA filament transformer (Radio Shack 273-1385, modified per text)
Misc.—Plastic case (Radio Shack 270-231), Insulated miniature alligator clips (red, green, and yellow; Radio Shack 270-378), knob with pointer, line cord, mounting hardware, press-on type, etc.

*Fig. 1. Transistor being tested is plugged into SO1 or connected to color-coded alligator clips.*

This distinction provides the type identification.

With the correct phasing of the 3-4 secondary of *T1*, the exclusive OR signals are accepted by the LED driver that can react to a compatible signal during its half cycle of the ac. Diodes *D3* and *D4* prevent slight differences in the voltage levels from turning on the drivers.

**Construction.** To duplicate the prototype and use the pc boards shown in Fig. 2, certain mechanical modifications must be made to two of the components. Transformer *T1* must have its four terminals cut to a size that can fit into the pc board. As shown in Fig. 3, two more tabs must be added to terminate a new winding. The molded plastic form of this transformer allows adding the two new terminals (3 and 4 on the schematic). The six terminals will then be spaced three on each side, on ⅜-in. centers.

Wind 46 turns of #34 enamelled wire around the original core. There is enough room to do this, although it will take a little patience. Be sure that the new winding is wound in the same direction as the 12-volt winding already on the transformer to ensure correct phasing. (Don't scrape the enamel off the wire.) If you should wind the new secondary the wrong

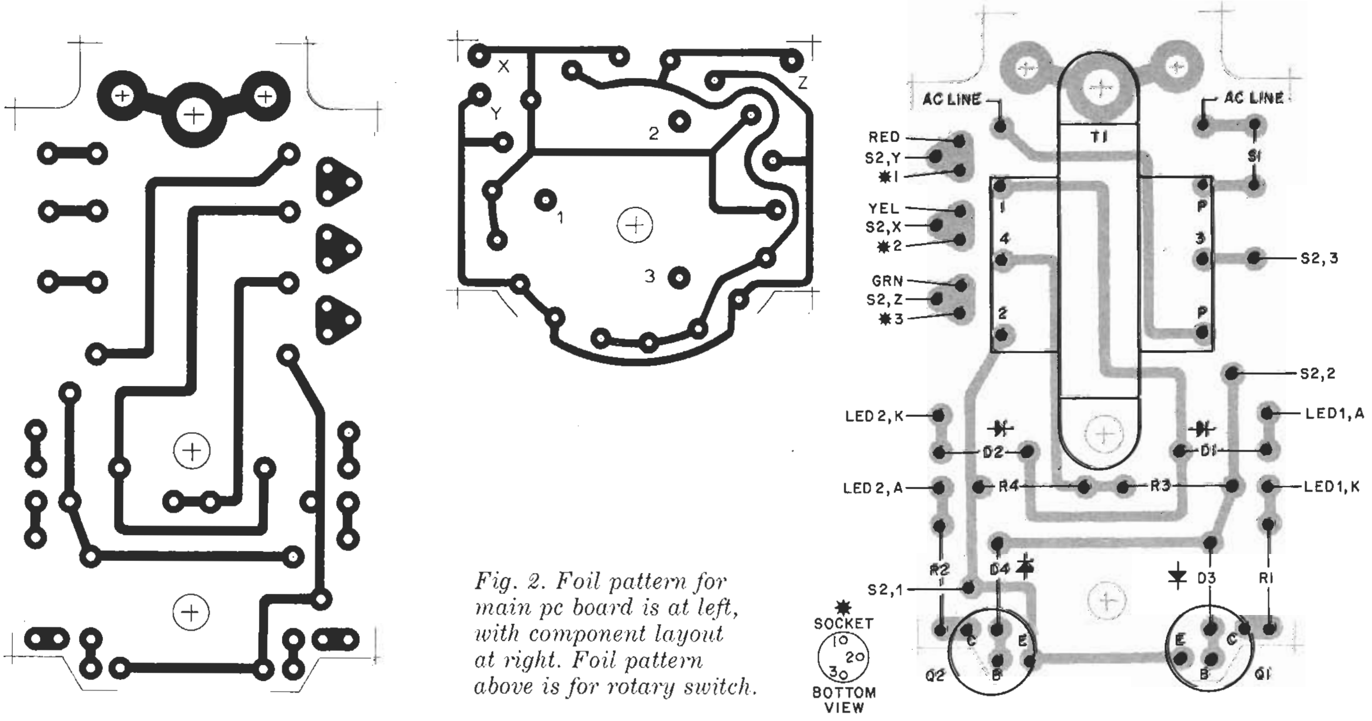

*Fig. 2. Foil pattern for main pc board is at left, with component layout at right. Foil pattern above is for rotary switch.*

way, it is easier to route the ends to the correct terminals than to start over or modify the pc board.

The terminals of *S2* must be modified as shown in Fig. 3 so that the switch will fit the pc board as shown in Fig. 2.

Now you are ready to assemble the circuit on the main board as shown in Fig. 2. The front panel is marked as shown in the photograph with the six switch positions identified. Install *SO1* and mount the LED's in small rubber grommets, properly identified.

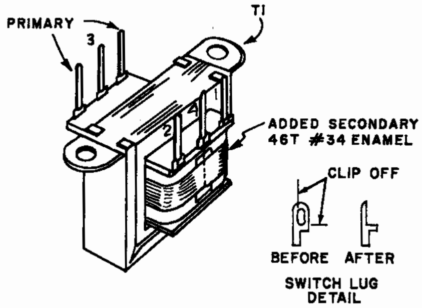

*Fig. 3. Add a winding and terminals to the transformer and alter switch lugs as shown.*

Then mount the switch on the front panel. Connect the larger board to it with spacers. Note that the large board has a small spacer supporting it from the hole drilled near the center of the rotary switch board.

Drill three small holes for the colored test leads and put grommets in the holes. The leads are terminated with color-coded insulated alligator clips. From the top of the panel, the lowest test lead (green) is on a line from the emitter terminal on *SO1*; the center lead (yellow) is the base; and the upper lead (red) is the collector.

**Operation.** Connect the three color-coded test leads to the unknown transistor in any order, turn on the power, and rotate *S1* until one of the LED's illuminates. Make sure that this only occurs at one position. The position of the switch will then identify the leads and the LED will indicate the type.

If the transistor being tested is not good (either open, shorted or leaky), neither indicator may come on or one or both may light at more than one switch setting.

The Identometer will not check FET's, nor will it work "in circuit." When checking power transistors, particularly germanium types, there may be some unpredictable results due to the high leakage current associated with these transistors. ◆

# Overvoltage indicator can be added to C-MOS IC tester

by Rajni B. Shah
*Rohde & Schwarz, Fairfield, N.J.*

A warning light that signals the presence of an overvoltage can be added to the features described in "In-circuit IC tester checks TTL and C-MOS" [*Electronics*, May 30, 1974, p. 120]. A light-emitting diode glows if the IC under test has any pin voltage greater than 18 V. The warning circuit, like the rest of the test circuit, draws its power from the IC being checked. As described here, it can operate at overvoltages as high as 30 V.

The indicator circuitry, shown below, is connected to the tester described previously. Warning LED $D_1$ is shunted by $Q_1$, which is normally held in conduction by the potential applied to its base through $R_2$. $Q_2$ is normally inhibited by the base connection through $R_3$. If the voltage at any IC pin exceeds 18 V, however, zener diode $D_2$ breaks down, and $Q_2$ starts to conduct. Conduction in $Q_2$ pulls the base of $Q_1$ up to turn off $Q_1$. The voltage drop across $Q_1$ then is sufficient to light up LED $D_1$, indicating the overvoltage. ☐

---

Designer's casebook is a regular feature in Electronics. We invite readers to submit original and unpublished circuit ideas and solutions to design problems. Explain briefly but thoroughly the circuit's operating principle and purpose. We'll pay $50 for each item published.

**Indicator.** Overvoltage warning LED $D_1$ lights if the IC under test has any pin at a voltage greater than 18 V. Indicator $D_1$ and its associated components are shown connected to an in-circuit IC tester. The test circuitry derives its power from the device being checked.

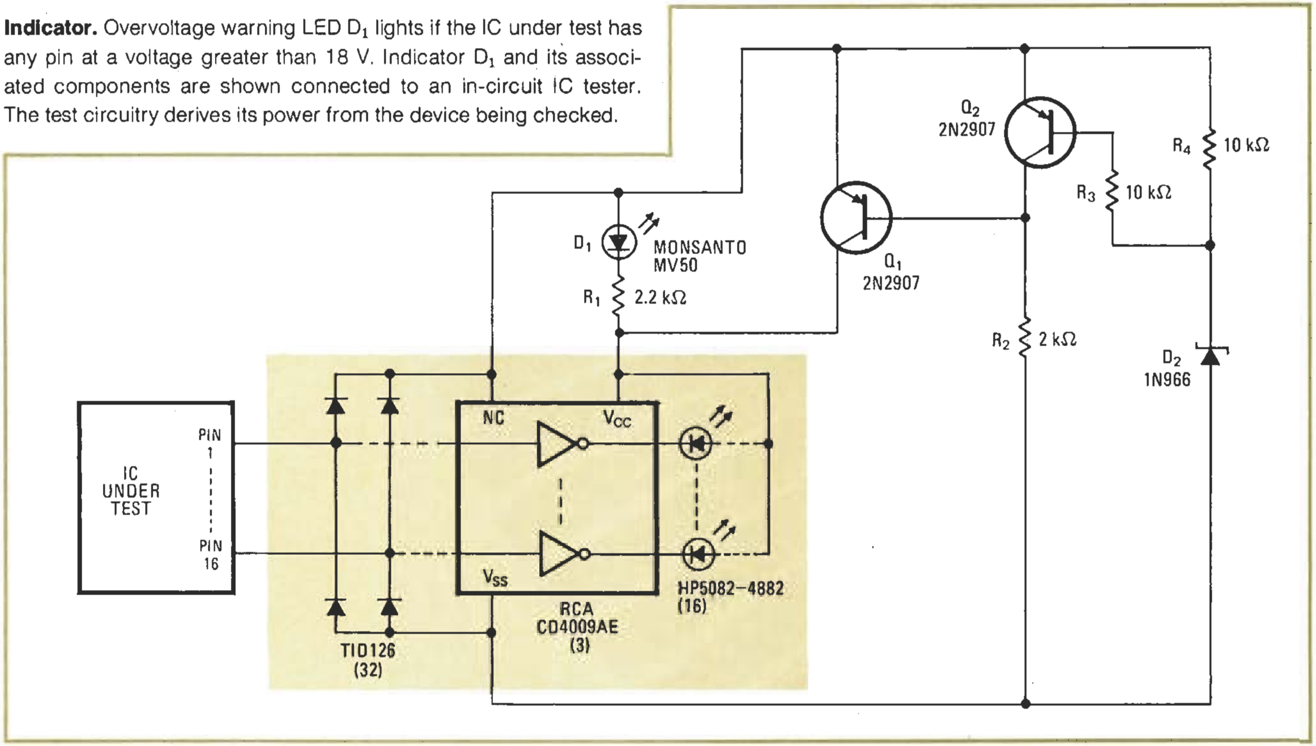

# Back-bias continuity checks TTL wire bonds

by Shlomo Waser
*Monolithic Memories Inc., Sunnyvale, Calif.*

All the connections between a TTL chip and its package pins can be checked quickly and simultaneously by an easily made tester. The packaged integrated circuit is simply slipped into a socket; if an indicator light goes on, one or more of the wire bonds is open. If the light stays off, all of the pin-to-circuit connections are good.

This test can be used for incoming inspection, and samples can be checked during each production period to spot faulty wire-bonding operations in time to avoid expensive assembly failures. However, the test is not effective unless the device has clamping diodes on the input pins. The TTL units of a few years ago did not have these diodes. Now, although 14-pin and 16-pin units may or may not have them, most 24-pin devices are new enough to have the diodes.

Operation of the tester relies on the fact that most TTL devices have a reverse diode between each pin and the substrate. All the pins exhibit this diode effect, but for various reasons. Input pins have clamping diodes to reduce transmission reflections. Output pins show diode action between collector and substrate if the substrate is made positive. Similarly, there is a diode action between the $V_{CC}$ pin and the substrate.

Under these conditions, the continuity of the connections from the chip (or die) to the pins can be tested by connecting the substrate to the positive side of a 5-V supply and providing pull-up resistors from each pin to the negative side of the supply. Figure 1 shows two typical pins in this test arrangement.

Pin 3 has a good bond to the die; therefore the voltage at pin 3 is the substrate voltage minus the voltage drop across the diode (i.e., 5.0 − 0.7 = 4.3 V), which is a definite logic 1. However, since the bond between pin 9 and the chip is broken, the voltage at pin 9 is zero, which is a definite logic 0.

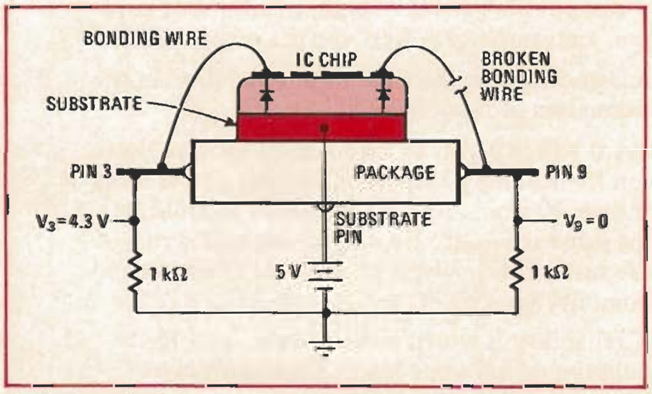

**1. Basic principle.** Equivalent circuit of TTL integrated circuit shows diodes between substrate and circuit contact points. When substrate is at positive voltage, diodes conduct current if chip-to-pin connections have continuity. Voltage drops across 1-kilohm pull-up resistors provide logic levels for simultaneous test of all bonding connections, as shown in Fig. 2.

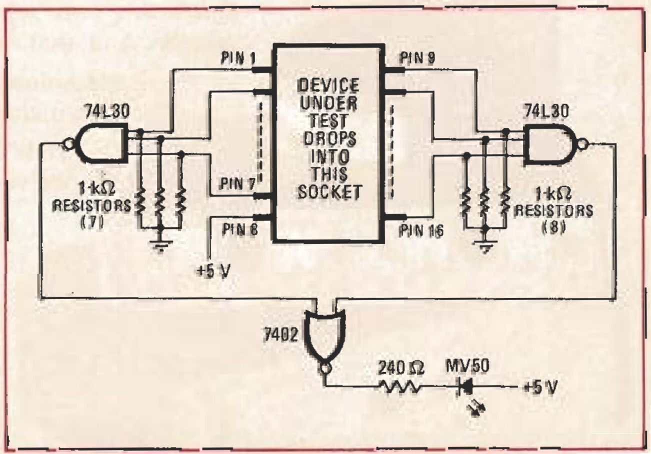

**2. Gate logic.** If all wire bonds are good, all pins are at high voltage, output of NOR gate is high, and LED remains dark. If any bonds are defective, LED glows red. This test, by monitoring performance of bonding operation, can prevent expensive assembly failures.

With the two distinct logic states, it is a simple matter to connect an OR gate to all pins so that a light-emitting diode will turn on if one or more pins has a defective bond. Figure 2 shows such a circuit for a 16-pin device. The terminals of the zero-force-insertion socket are connected to 74L30 NAND gates. The NAND-gate outputs go into a 7402 NOR gate. If the NOR output is low, the LED lights. Obviously this technique can be extended to devices with more than 16 pins.

The circuit of Fig. 2 uses the 74L30 low-power NAND gates because 1 kilohm is too much resistance to use with standard NAND gates (where the input current at low level is sometimes as much as 1.6 milliamperes). An apparent alternative is to use smaller resistors, but then the current through the substrate would be too large, especially for devices with 24 pins or more. ☐

SPECIAL FOCUS: **Popular Electronics®**

# TEST INSTRUMENTS

- **BUILD A DIGITAL IC TESTER**
- **GUIDE TO OSCILLOSCOPES**
- **A 40-MHZ FREQUENCY COUNTER PROJECT**
- **ACCURATE MILLIAMMETERS ON A BUDGET**

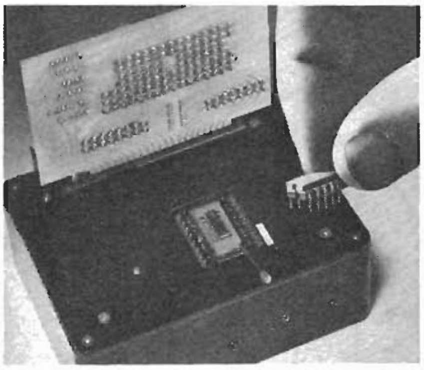

## BUILD A DIGITAL IC TESTER

*Inexpensive project tests DTL and TTL IC's.*

BY R. M. STITT

TESTING digital integrated circuits has posed a problem to experimenters ever since the devices were made available at the hobbyist level. After all, many hobbyists were not about to spend thousands of dollars for a commercial, general-purpose digital IC instrument. The tester presented here, however, can be constructed for just a few dollars and provide quick and accurate checks of 14- and 16-pin DTL and TTL IC's.

The operating principle is simple. Logic states of the questionable IC are compared to one of the same type that's known to be good. A testing program is set up via patch cords and the IC's are plugged into their respective sockets, at which time the unit automatically runs through the program. Even the most complicated test program will be performed about 40 times per second.

A good/bad LED indicates the overall status of the device. Furthermore, 16 LED's (one for each pin) isolate faults to specific pins so that bad sections or functions can be detected. These fault LED's are also useful for debugging test programs.

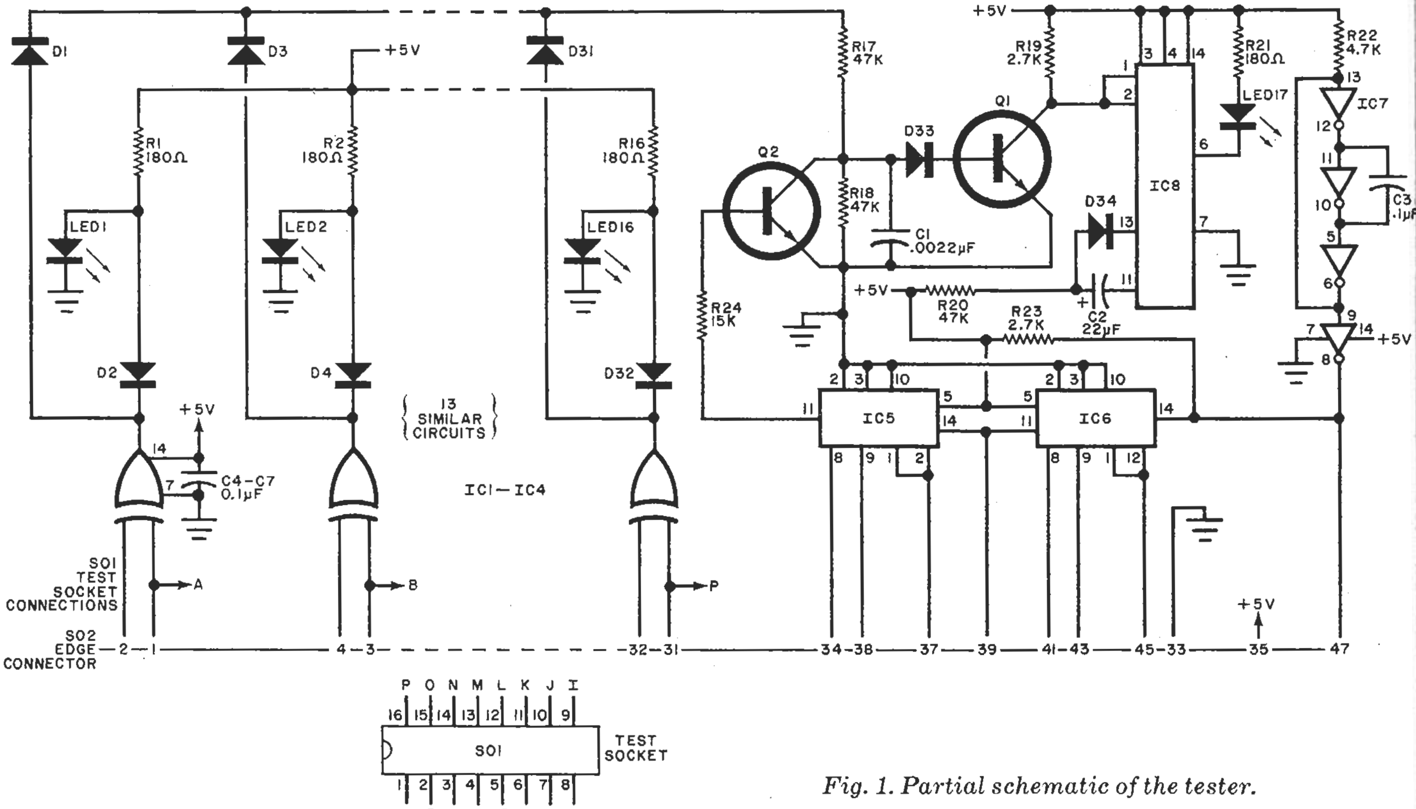

*Fig. 1. Partial schematic of the tester.*

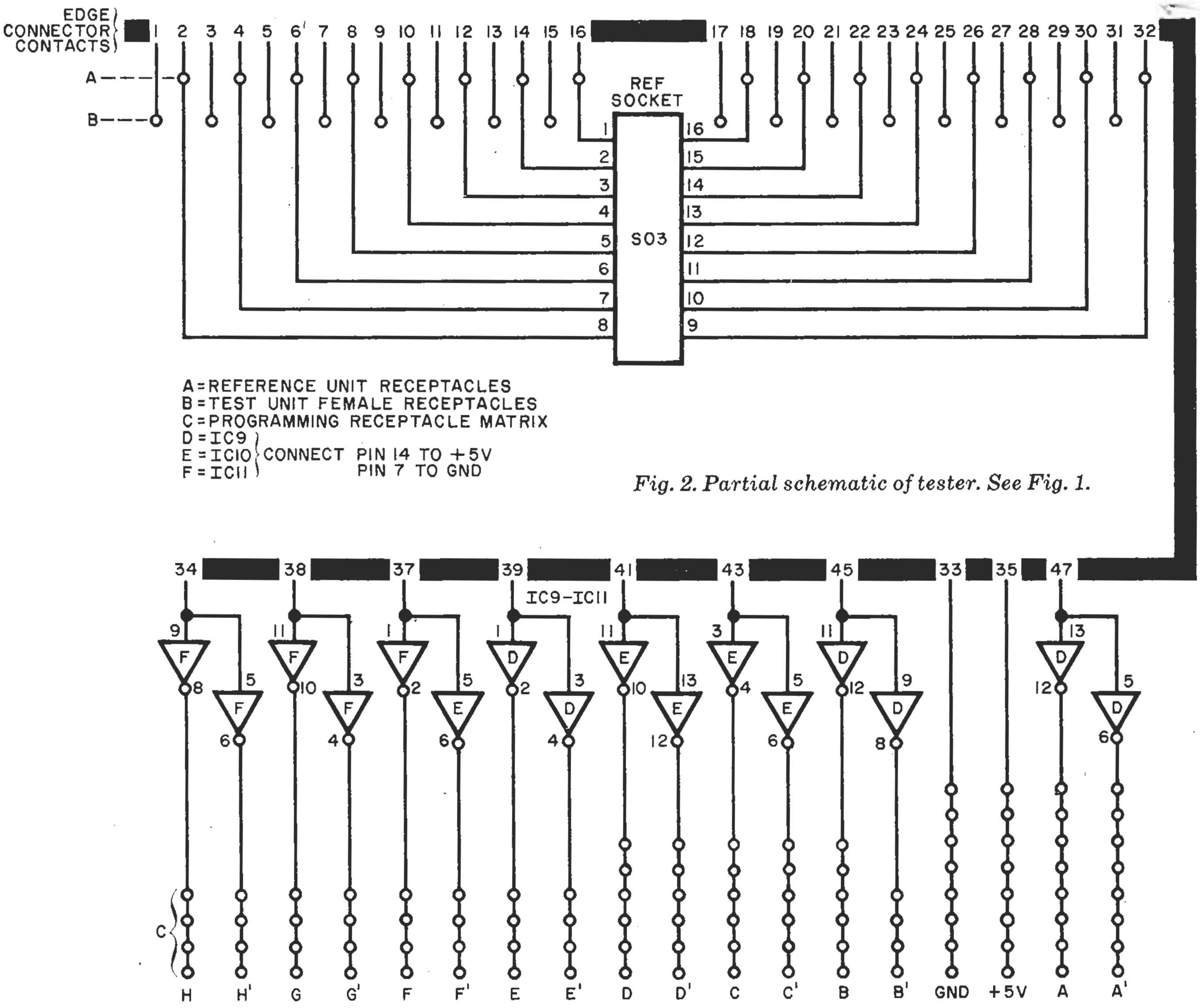

*Fig. 2. Partial schematic of tester. See Fig. 1.*

**About the Circuit.** The tester puts both IC's through their paces in parallel, covering all possible input combinations. The logic state at each input and output pin is continuously monitored and compared to the reference IC. If there is a discrepancy with any input combination, the IC under test is defective and a fault will be indicated by the IC tester.

The schematic diagram of the IC tester is shown in Figs. 1 and 2. The basic element for the electronic comparison is the exclusive-OR gate. Four two-input, exclusive-OR gates are contained in each SN7486 package (*IC1* through *IC4*), for a total of 16 gates. One input of each gate is hardwired to the test IC socket (*SO1*) for individual pin monitoring. The other gate input is hardwired through programming-board edge connector *SO2* to the corresponding pin on the programming board's reference IC

## PARTS LIST

C1—0.0022-µF disc ceramic capacitor
C2—22-µF, 10-V tantalum capacitor
C3 through C7—0.1-µF disc ceramic capacitor
C8—3000-µF, 25-V electrolytic capacitor
C9—10-µF, 10-V tantalum capacitor
D1 through D34—1N914 switching diode
D35, D36—1N4001 rectifier diode
IC1 through IC4—SN7486 quad 2-input exclusive-OR gate
IC5, IC6—SN7493 4-bit binary counter
IC7—SN7405 open collector hex inverter (do not substitute)
IC8—SN74122 retriggerable monostable multivibrator
IC9 through IC11—SN7404 hex inverter
IC12—LM309K 5-volt regulator
LED1 through LED 17—Light emitting diode (TIL-32 or similar)
Q1, Q2—2N3904 npn silicon transistor
The following are 5% tolerance, ¼-watt carbon composition resistors:
R1 through R16, R21—180 ohms
R17, R18, R20—47,000 ohms
R19, R23—2700 ohms
R22—4700 ohms
R24—15,000 ohms
SO1—Zero-insertion-force 16-pin DIP IC socket (Textool No. 216-330M or equivalent)
SO2—48-pin edge connector (Amphenol No. 2-583660-3 or equivalent)
SO3—16-pin DIP IC socket
T1—20-volt center-tapped, 1-ampere transformer (Burstein-Applebee No. 18A 1626-1 or equivalent)
Misc.—Suitable enclosure (Harry Davies No. 260K with No. 261 cover, or equivalent), printed circuit boards, No. 4 × ¼" standoffs, suitable programming receptacles and patch cords, heat sink, thermal silicone compound, machine hardware, hook-up wire, solder, etc.
Note: See Fig. 4 for information on ordering pc boards.

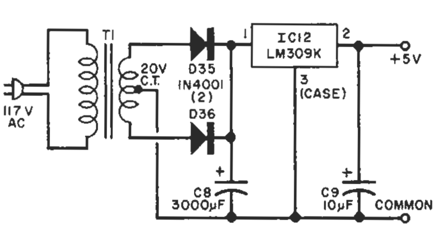

*Fig. 3. Schematic for a suitable power supply.*

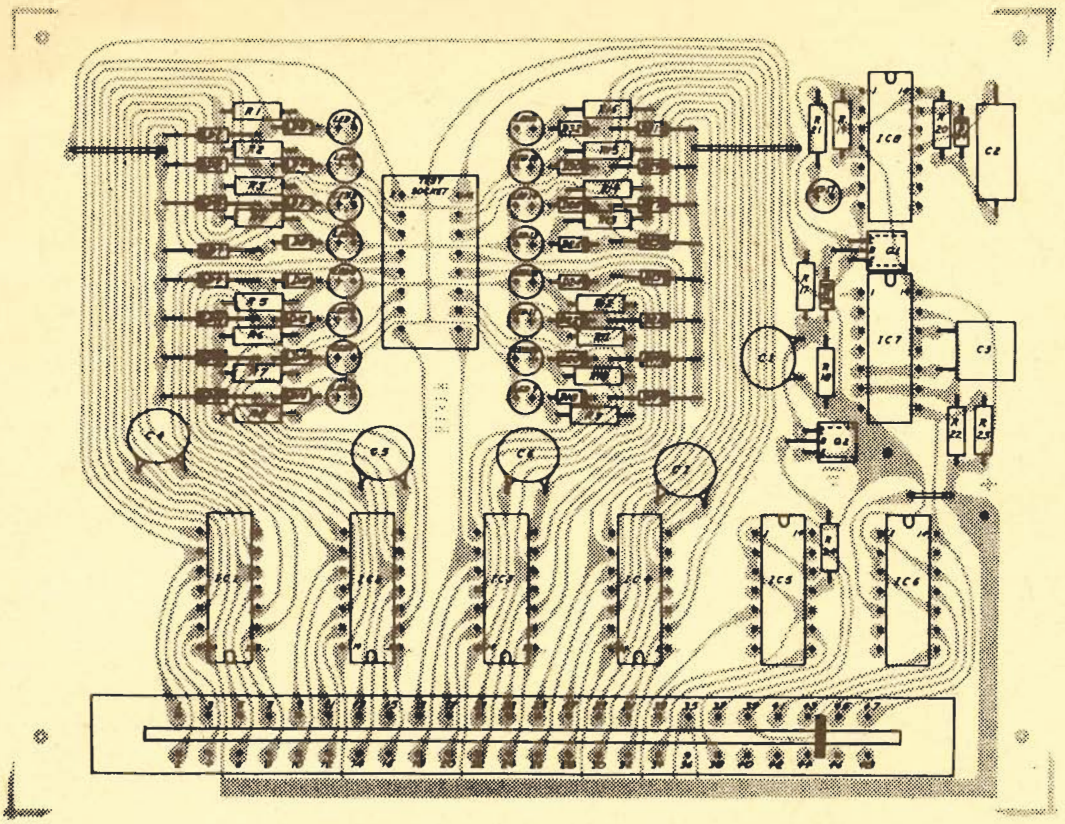

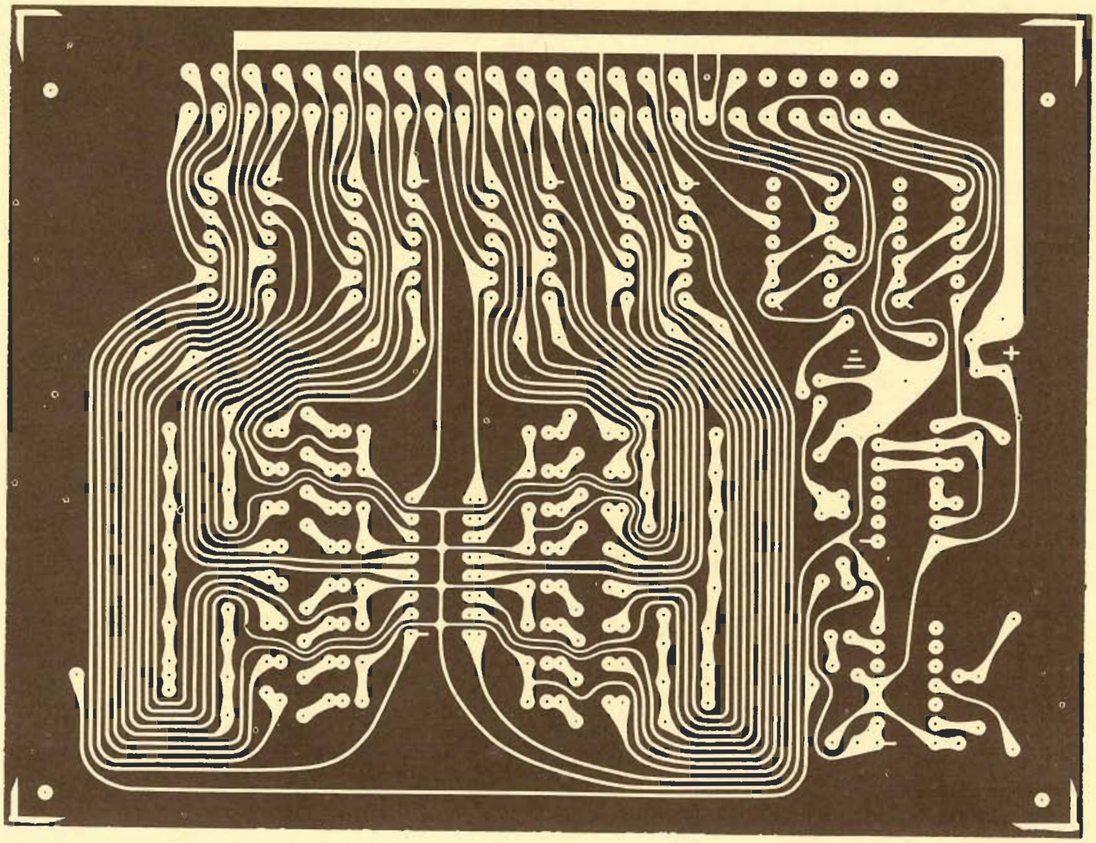

*Fig. 4. Etching and drilling guide (right) and component layout (above) for main pc board. Note: etched and drilled pc boards for this and Fig. 5 are available from Select Circuits, 1411 Lonsdale Rd, Columbus, OH 43227 for $18.95 a pair.*

socket (*SO3*). Each exclusive-OR gate thus yields a logic-one output signal whenever its two input signals have different logic states. In other words, a logic one appears at the output of each gate when a discrepancy of performance between the test and reference IC's is detected.

Two fault indicator circuits are employed. A LED (*LED1* through *LED16*) at the output of each exclusive-OR gate glows when an error at the corresponding test IC pin is detected. Additionally, a master fault indicator (*LED17*) glows when one or more exclusive-OR gate output is high. Diodes *D1, D3, D5*. . . *D31* are connected to *R17* and to the exclusive-OR outputs to form one large OR gate. A pulse stretcher is included in the master fault indicator circuit to insure that *LED17* will glow at full brilliance no matter what the duty cycle of the fault signal is. This is very important because it's possible for a fault signal to have a

7

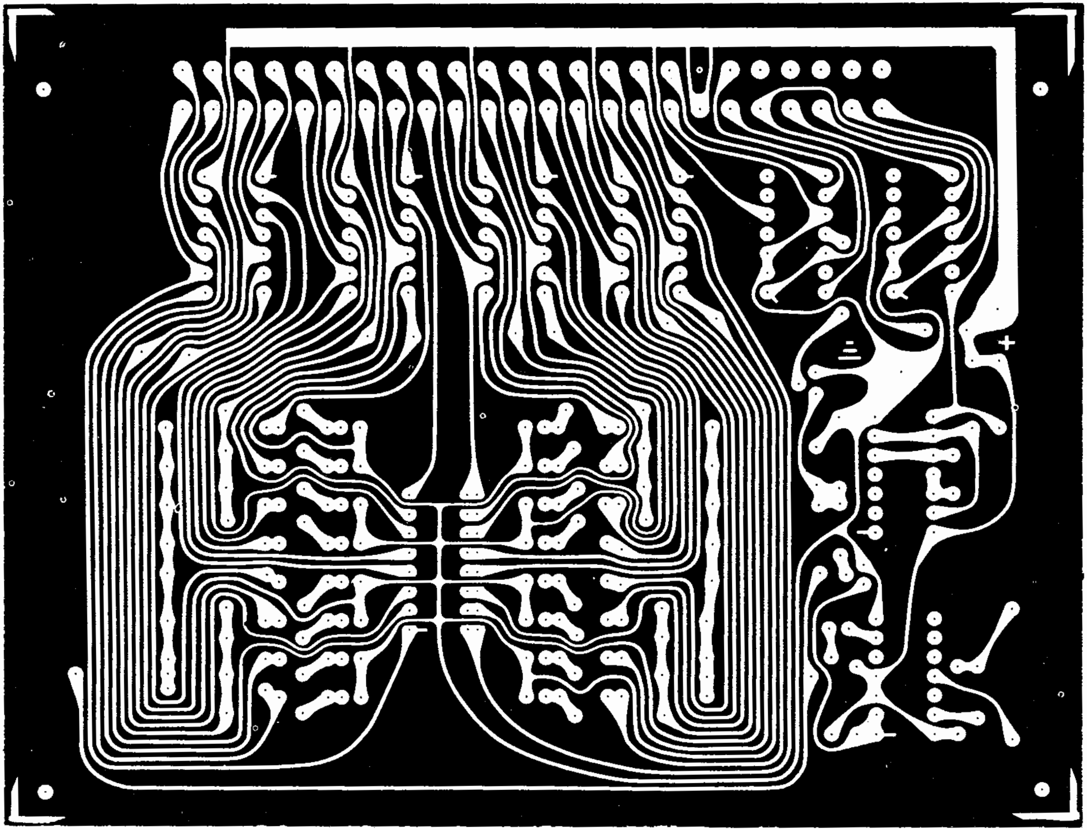

exclusive-OR gate

Two fault indicator circuits are em-

*D31* are connected to *R17* and to the ex-

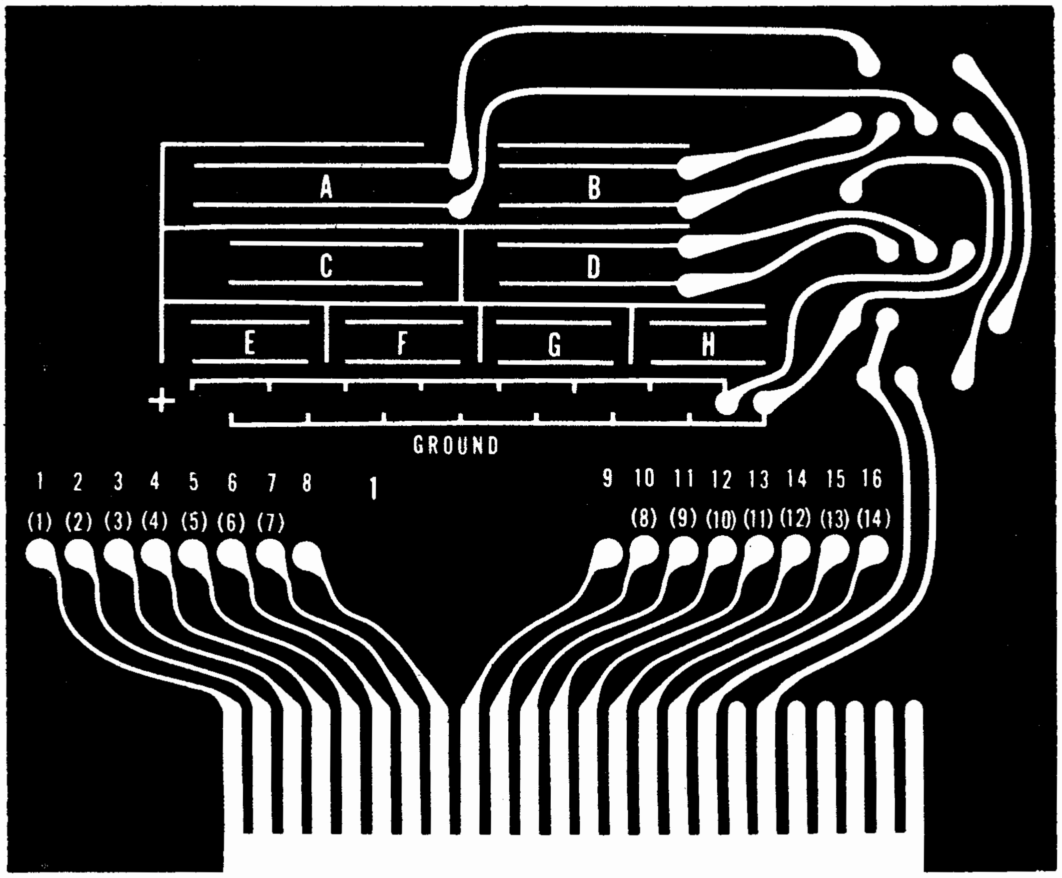

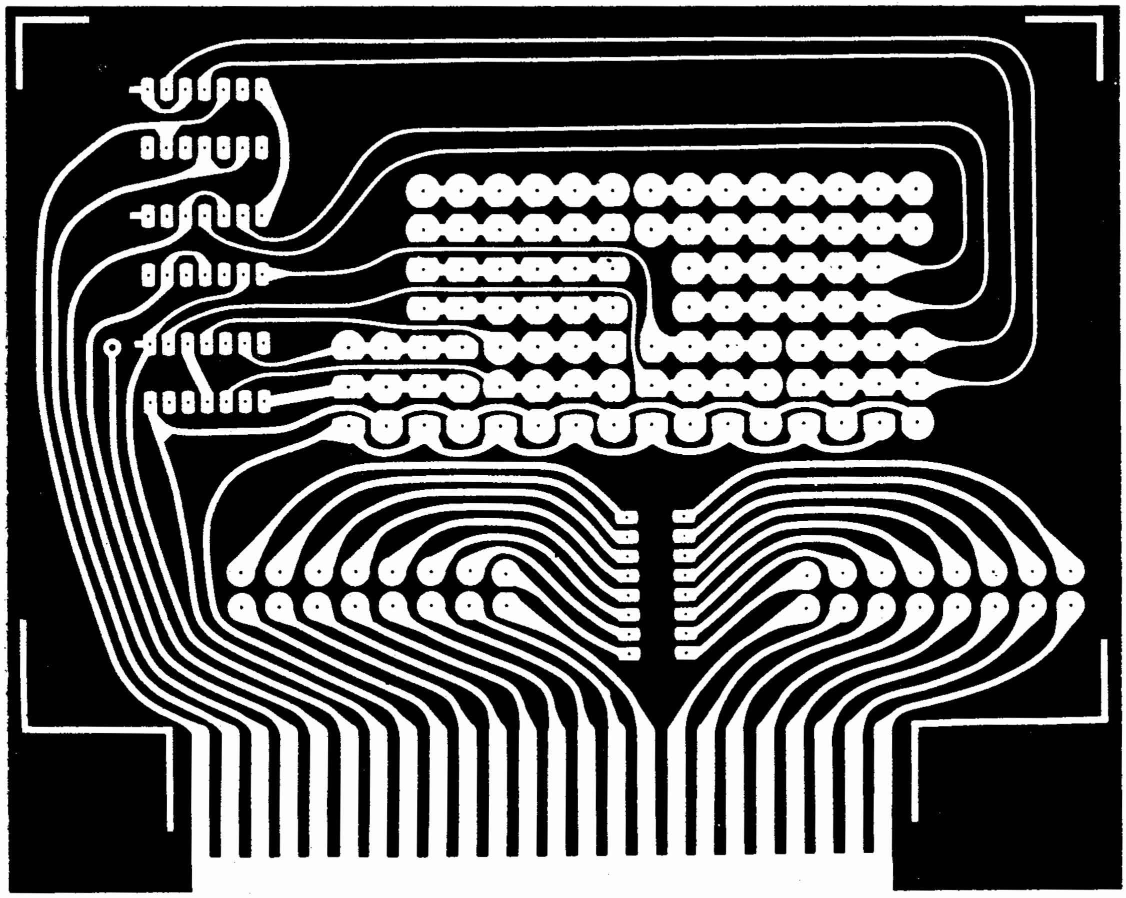

*Fig. 5. Etching and drilling guides for both sides of the programming pc board. See Fig. 4 for ordering information.*

duty cycle as low as 0.4%. It would be difficult, if it were even possible, to detect light output from a LED driven by such a signal. The circuit also includes a low-pass filter (*R17, R18* and *C1*) at the master fault input to reject noise spikes which might otherwise generate a deceptive fault indication.

The diode OR gate drives pulse stretcher *IC8* (an SN74122 monostable multivibrator) and its associated components (*C2, D34,* and *R20*) through input conditioners *D33* and *Q1*. Because a continuous fault indication at the pulse stretcher input would trigger the one

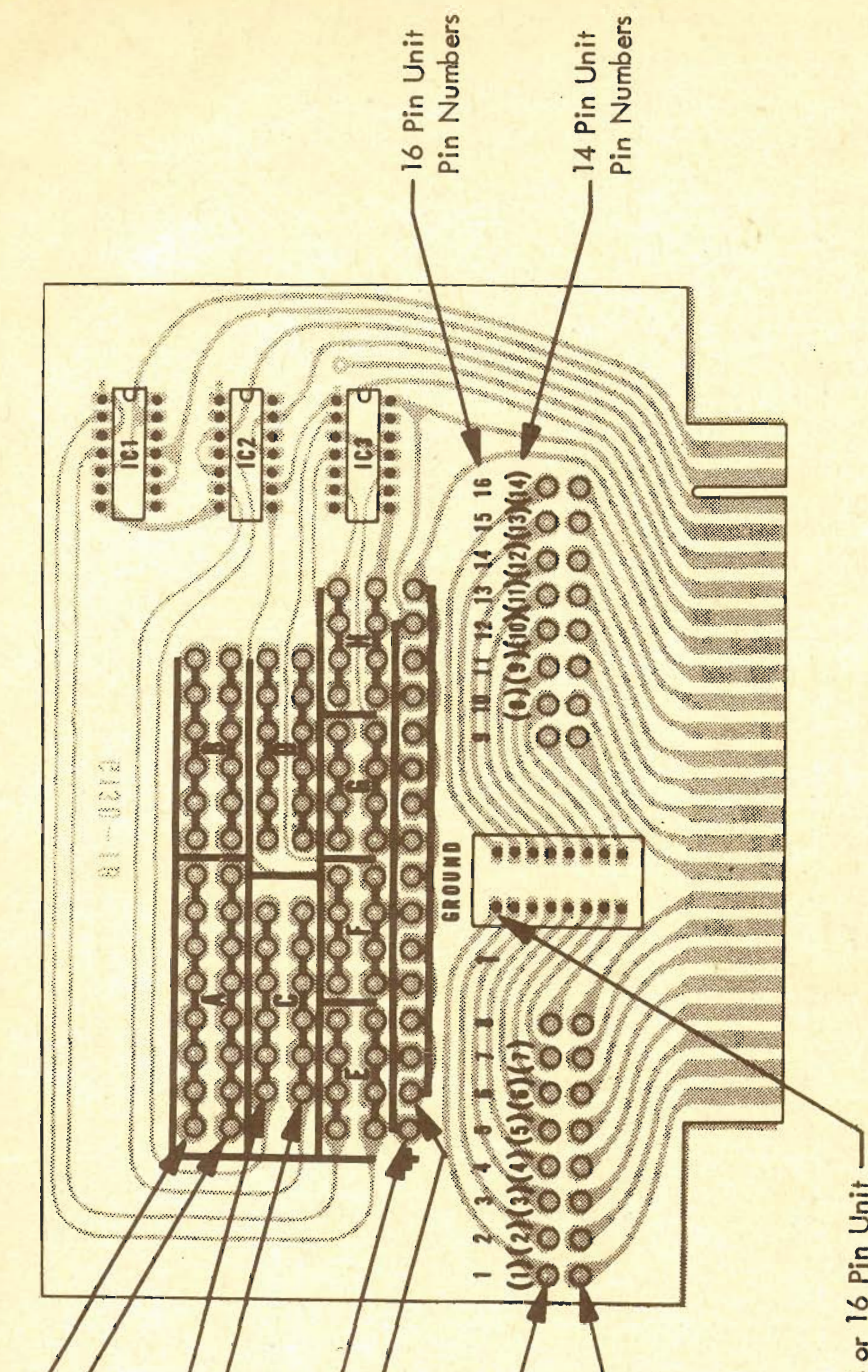

*Fig. 6. Component placement guide for programming pc board.*

shot for but one test cycle, the input must be periodically reset. This is accomplished by transistor *Q2*, which is driven by the last stage of a binary code generator.

To provide all possible test input combinations, an eight-stage binary code generator (*IC5* and *IC6*, SN7493 4-bit counters) is incorporated. It is driven by a free-running square-wave generator consisting of *C3*, *R22*, and *IC7*, an SN7405 hex inverter. The square-wave generator provides a clock signal at about 5000 Hz. The clock output and the outputs from the first seven stages of the binary code generator are available at edge connector *SO2*. Thus there are eight independent test input signals present on the programming board. The eighth stage of the binary code generator is used to reset the master fault indicator, as mentioned earlier.

The programming board interfaces with the main tester board via 48-pin edge connector *SO2*. This allows prewired program cards to be kept on hand and simply plugged into the tester for quick checks of common IC's. Each bit of the binary code is independently buffered by sections of *IC9* through *IC11* (SN7404 hex inverters) to drive both the reference and test IC inputs. Separate buffering for all inputs of each IC ensures that such logic-overriding faults as input short circuits will be detectable.

The tester is powered by a simple 5-volt, 1-ampere regulated supply (Fig. 3). Ac from *T1* is converted to pulsating dc by a full-wave rectifier (*D35* and *D36*) and filtered by *C8*. Unregulated dc is then applied to *IC12*, an LM309K 5-volt regulator, which is essentially blow-out proof. Current limiting is built in to the IC, as is thermal shutdown. Output bypass capacitor *C9* provides increased stability and improved transient response.

However, other power supply configurations can be used. For example, *T1* could be a 12.6-volt, 2-ampere transformer driving a bridge rectifier. The output of the bridge would then be filtered and regulated as in Fig. 3.

**Construction.** Assembly of the tester is not critical. However, the use of pc boards will simplify the task. Etching and drilling guides for the main and programming boards are shown in Figs. 4, 5, and 6. The main pc board contains most tester components mounted in a conventional manner. It in turn is mounted on four ¼-inch (6.4-mm) No. 4 standoffs behind the front panel of a molded plastic box. Holes are cut in the front panel for the test socket, the sixteen indicator

| | | | | | | | |
|---|---|---|---|---|---|---|---|
| Reference Unit Connection | A' | NC | NC | NC | COM | NC | NC | X |
| Test Unit Connection | A | NC | NC | NC | COM | NC | NC | X |
| Pin Number | (14)<br>16 | (13)<br>15 | (12)<br>14 | (11)<br>13 | (10)<br>12 | (9)<br>11 | (8)<br>10 | X |

DEVICE TYPE: **CIRCUIT TYPES SN5490, SN7490 DECADE COUNTERS**

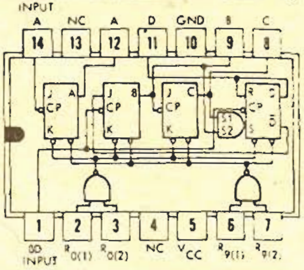

| | | | | | | | |
|---|---|---|---|---|---|---|---|
| Pin Number | 1<br>(1) | 2<br>(2) | 3<br>(3) | 4<br>(4) | 5<br>(5) | 6<br>(6) | 7<br>(7) | X |
| Test Unit Connection | B | C | D | NC | V+ | E | F | X |
| Reference Unit Connection | B' | C' | D' | NC | V+ | E' | F' | X |

| | | | | | | | |
|---|---|---|---|---|---|---|---|
| Reference Unit Connection | V+ | B' | NC | B' | NC | B' | NC | X |
| Test Unit Connection | V+ | B | NC | B | NC | B | NC | X |
| Pin Number | (14)<br>16 | (13)<br>15 | (12)<br>14 | (11)<br>13 | (10)<br>12 | (9)<br>11 | (8)<br>10 | X |

DEVICE TYPE: **CIRCUIT TYPES SN5404, SN7404 HEX INVERTERS**

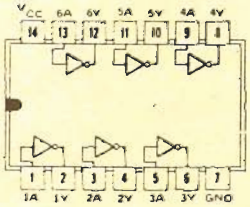

| | | | | | | | |
|---|---|---|---|---|---|---|---|
| Pin Number | 1<br>(1) | 2<br>(2) | 3<br>(3) | 4<br>(4) | 5<br>(5) | 6<br>(6) | 7<br>(7) | X |
| Test Unit Connection | A | NC | A | NC | A | NC | COM | X |
| Reference Unit Connection | A' | NC | A' | NC | A' | NC | COM | X |

NOTES: All inputs could have been tied in parallel to A & A' for example, but it is not necessary to do so.

*Fig. 7. Sample programming sheets for testing decade counters (above) and hex inverters (below).*

LED's, the master fault indicator and the edge connector.

Before mounting any components on the main board, use it as a template to locate holes and cutouts on the front panel. It can be clamped to the front panel and used as a drilling guide for the four standoff mounting holes. The locations of the master fault indicator, the test socket, and edge connector can be specified by marking the corners of each cutout. Components which do not protrude through the front panel must be mounted flush to the main pc board so that they will not interfere with the fit of the board to the front panel. If LED's with base diameters larger than 0.200" (5.08 mm) are used for the sixteen fault indicators, their bases must be filed so that a proper fit is obtained. The author recommends the use of a 16-pin zero-insertion-force (Textool No. 216-330M or equivalent) IC socket for the test IC location. A conventional DIP socket can be substituted, of course, but is much less convenient to use for many IC's.

The programming board is double-sided. Because most builders will not be able to produce plated-through holes, IC and socket pins, as well as programming receptacles must be soldered (where applicable) to both sides of the board. The programming receptacles and jumpers (patch cords) are a matter of preference. The solder pads on the pc board are large enough to accept eyelet sockets for the 0.040" (0.916-mm) pin terminated type of patch cords. The most economical programming patch cord is simply a length of No. 22 or 24 solid insulated hookup wire. The wire should be cut to the desired length and about ½" (1.27 cm) of insulation stripped from each end. If diagonal cutters are used to trim wire length, position the cutters so that their hollow side faces the body of the jumper when the wire is clipped. Then a point will be formed on the wire, making it easier to insert the jumper into a programming receptacle.

A solid wire jumper is best accommodated by a 0.020" (0.458-mm) receptacle. No. 24 wire is approximately 0.020" (0.458 mm) in diameter and fits such a receptacle exactly. No. 22 wire is about 0.005" (0.127 mm) larger in diameter and thus makes a more secure fit in some 0.020" (0.458-mm) receptacles. Probably the most inexpensive 0.020" (0.458-mm) receptacle available is the Molex Soldercon, which is sold in quantity by many dealers in the Electronics Marketplace in this magazine.

You might want to solder wire jumpers to appropriate points without using any receptacles at all. This can be done if you desire a permanent testing board for a specific IC type. You could even make one "deluxe" programming board with patch cords and receptacles for testing any TTL IC, and at the same time fabricate a number of prewired boards set up for frequently tested IC types.

Power supply construction is not critical. Point-to-point wiring is adequate. Connections from the IC tester to the power supply should be made directly at the voltage regulator's terminals. If the project is mounted in a plastic, rather than aluminum, enclosure, a heat sink must be provided for *IC12*. In any event, heat sink compound such as Dow Corning No. 340 silicone heat-sink compound should be used when mounting the IC on a heat dissipating surface.

Worst-case maximum power dissipation for the regulator will be approximately (in watts) the unregulated supply voltage minus five volts, because maximum current is about one ampere. The maximum dissipation of the regulator must be kept in mind when selecting the power supply transformer and heat sink. The rectified voltage across the filter capacitor will be about 1.4 times the rms voltage from the center tap to one end of the secondary in a full-wave circuit. If a bridge rectifier is used, the dc voltage across the filter capacitor will be about 1.4 times the rms voltage across the entire secondary winding (no center tap is needed). In any event, the unregulated dc applied to the input of *IC12* should never drop below 8 volts at full load. Otherwise the output will not be regulated. Also, the input to the regulator must not exceed 35 volts or the integrated circuit will be damaged.

**Programming.** All that's required to program the tester is patching input signals to the reference and test IC's. Each individual input of the test IC should be connected to a different binary code bit (*A* through *H*). In multiple section IC's, corresponding inputs can be wired in parallel. For example, when programming a test of a quad two-input NAND IC (SN7400), one input of each gate can be connected to the *A* output of the binary code generator and the other input of each gate to the *B* output. Thus there would be four gates with their inputs wired in parallel to the *A* and *B* bits.

When specific binary code generator outputs (*A* through *H*) are patched to the test IC inputs, the corresponding separately buffered outputs *A'* through *H'* must be patched to the corresponding reference IC inputs. Programming is completed by patching +5 volts and grounds to the appropriate pins of both IC's.

The foil on the component side of the programming board is etched to provide clear labelling. Binary code generator outputs are boxed in and identified by the letters *A* through *H*. Separately buffered outputs are shown bussed together on the component side. This bussing is done for appearance's sake only and the programming receptacles need not be soldered on this side of the board. Actual bussing is done on the other side. Note, however, that the right-most receptacles in areas A, B and D must be soldered on both sides of the pc board.

The choice of which binary code outputs are used to drive either the reference IC or test IC inputs is unimportant so long as only one set (*A* through *H* or *A'* through *H'*) is used with one of the two IC's. The +5 volt supply is identified by a "+" and is shown bussed on the component side of the board. Similarly, the ground is so labelled and bussed. Again, this bussing on the component side of the board is for appearance only and the receptacles need not be soldered on the component side. But the right-most receptacles must be soldered on both sides of the board for proper connection to the power supply.

Receptacles tied to the test and reference IC sockets parallel each other along the edge of the board just above the edge connector contacts. They are labelled with pin numbers for 14- (in parenthesis) and 16-pin DIP's.

Two programming examples are shown in Fig. 7. It is desirable to make up similar programming sheets for each IC you test. Then you can use them as check-off sheets to verify proper programming and as a permanent record of the test program. Similar tests can then be performed at a future date by quickly referring to the appropriate programming sheet. ◇

## OP AMP CHECKER

This circuit allows a quick and accurate GO/NO GO test to be made on 741 op-amps.

A1kHz square wave is generated by the astable multivibrator Q1 and Q2 and the associated components R1—R4 and C1—2. This is fed into pin pin 3 of a standard 8 pin DIL or TO99 IC socket.

Assuming a working IC has been inserted this signal will enter it's non-inverting input and appear amplified at the output, pin 6.

Q3, an inexpensive germanium power transistor is connected as a class A output stage whose load is a 15Ω speaker.

R5 and R6 form the feedback loop to the inverting input whilst C3 isolates this pin from ground.

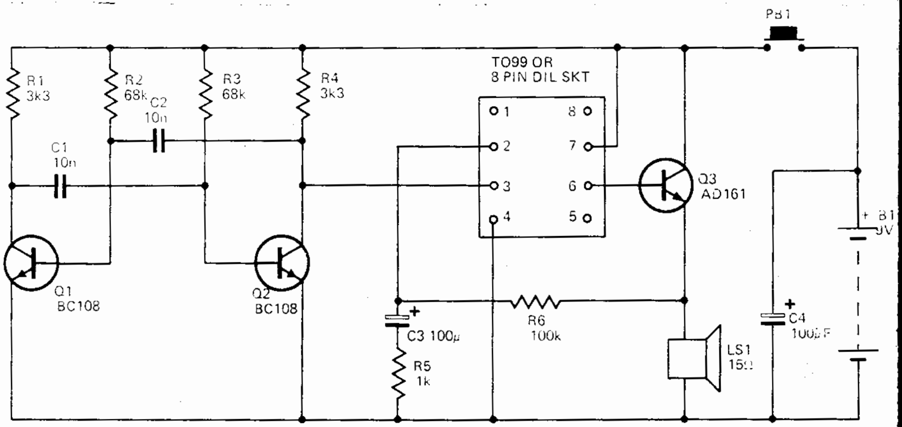

The battery employed should be a large type and periodic checking of its voltage must be made since a 741 will not work below 6V.

On pushing the test button a good IC will produce a loud note from the speaker. A faulty one will produce little or no output and should be discarded.

## Test CMOS and TTL with this versatile instrument.

# LOGIC TESTER

**WARNING:**

**When using the tester, remember that manufacturers recommend that CMOS ICs should not be inserted or removed from a circuit without first switching off the power supply.**

**etiproject 122**

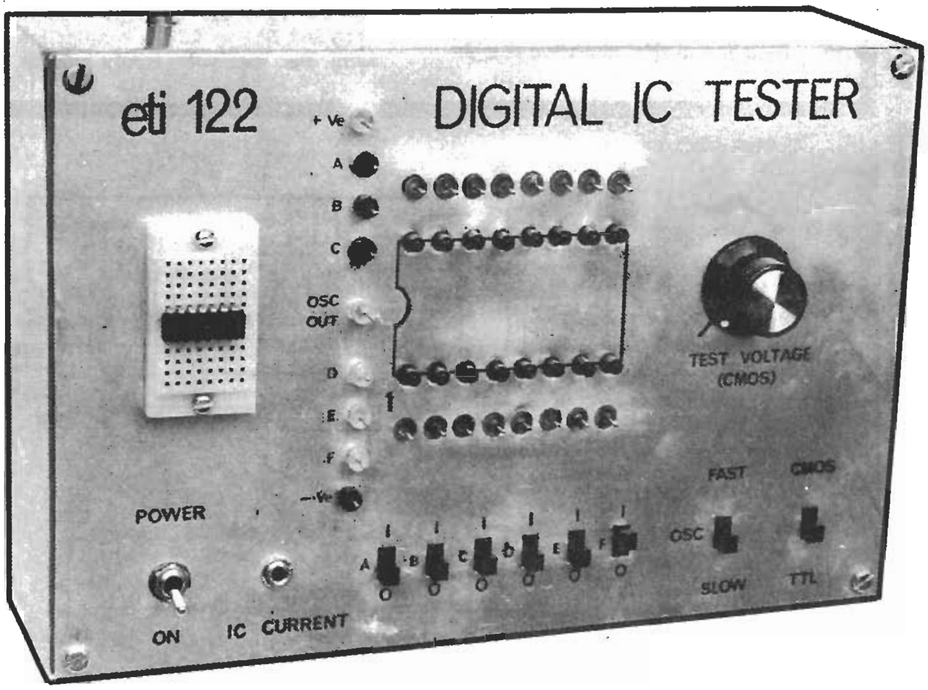

EXPERIMENTERS often damage ICs in the process of developing a new circuit and often try a new IC in a circuit that is not working to eliminate that as a possible cause. The result of this is that one usually finishes up with a box full of ICs which are of dubious value. To sort out these ICs one must use a tester that is capable of testing the wide range of differing ICs that are available in the most commonly used families.

Until recently the most commonly used family has been TTL. But CMOS is rapidly gaining widespread usage and any tester, to be of value these days, must be able to test both these families. The ETI Logic Tester is capable of testing both families, and is also capable of being used to breadboard and test simple circuits based on single ICs.

An LED indicator is associated with each pin of the IC under test and these are arranged around the perimeter of a box representing the IC under test. This allows a small card, which has the schematic of the particular IC drawn on it, to be fitted to the front of the tester as an aid to the interpretation of the LED test indications.

### CONSTRUCTION

The most expensive single component in the tester, after the transformer, is the case. For this reason we decided to make a wooden case and a plain aluminium front panel. Some people may however wish to mount the unit in a diecast box and for this reason the printed circuit board has been sized to fit in a standard 222 x 146 x 51 mm die-cast box. The following description is for a wooden box specifically, but applies equally well to the metal box.

The printed-circuit board is mounted to the rear of the front panel, copper side to the panel, such that the LEDs and patch pins, mounted on the printed-circuit board, project through the front panel. This greatly simplifies construction as it saves some 48 leads and solder joints. The switches are secured to the front panel by first glueing two pieces of printed-circuit board to the rear and then soldering the switches to the copper side of the board. This procedure avoids the necessity of a multitude of screws passing through the front panel.

The printed-circuit board should be assembled with the aid of the component overlay by fitting all components with the exception of IC1, 5, 6 and 7, and LEDs 1 through 16, and the patch pins. Check that the ICs are orientated correctly as are also C2, 5, 7, 9 and D1, 2 and 3. Now solder these parts into position using the least amount of heat necessary on ICs 2, 3 and 4.

Position the LEDs and patch pins onto the copper side of the board but do not solder them in place as yet. Now fit the board to the front panel so that the pins and LEDs protrude through the panel evenly. Secure the pins and LEDs in position by using a very small drop of five minute epoxy for each, on the component side of the

## HOW IT WORKS.

The tester consists of four basic sections. The socket for the IC under test, the output level-detect logic, oscillators and switches for the inputs, and the power supply.

The socket for the IC under test has the pins in each row electrically connected to each other. These rows are the groups of five holes which are perpendicular to the central groove on the socket. Each row (ie, each pin on the IC under test) is connected via a 10 megohm resistor to ground to prevent the build up of static charges. The resistors also hold all unconnected inputs at ground potential thus preventing any damage to the IC.

Each row is also connected to a pin on the front panel. Test connections are made to these pins by patchable links from the oscillator and test switches so that the correct test conditions may be set up.

Resistors R19-26 and R43-R50 connect each row (ie pin) to a logic level detector, ICs 5, 6, and 7. These CMOS hex-inverters buffer each pin and drive an LED to indicate the logic state of the pin. When the logic voltage on a pin is high the LED will be alight. Resistors R19 to R26 and R43 to 50 protect the internal diodes of ICs 5, 6 and 7 against the possibility of a pin being taken above the positive supply voltage or below ground potential. Resistors R11 to R18 and R51 to R58 in conjunction with the five volt supply set the operating currents for the LEDs.

A 555, IC4, is used as an astable oscillator which initially charges C8 via R9 and R10 until the 2/3 supply threshold is reached. C8 is then discharged via R9 and pin 7 of the 555 to the lower threshold of 1/3 supply volts. Switch SW6, when operated, puts a larger value of capacitance into the circuit which gives a frequency of about one hertz. This is slow enough so that the eye can follow each logic state transition. The high speed operation is used for checking very long counters and shift registers and can also be used in conjunction with an oscilloscope. The square wave output of the oscillator is made available at a

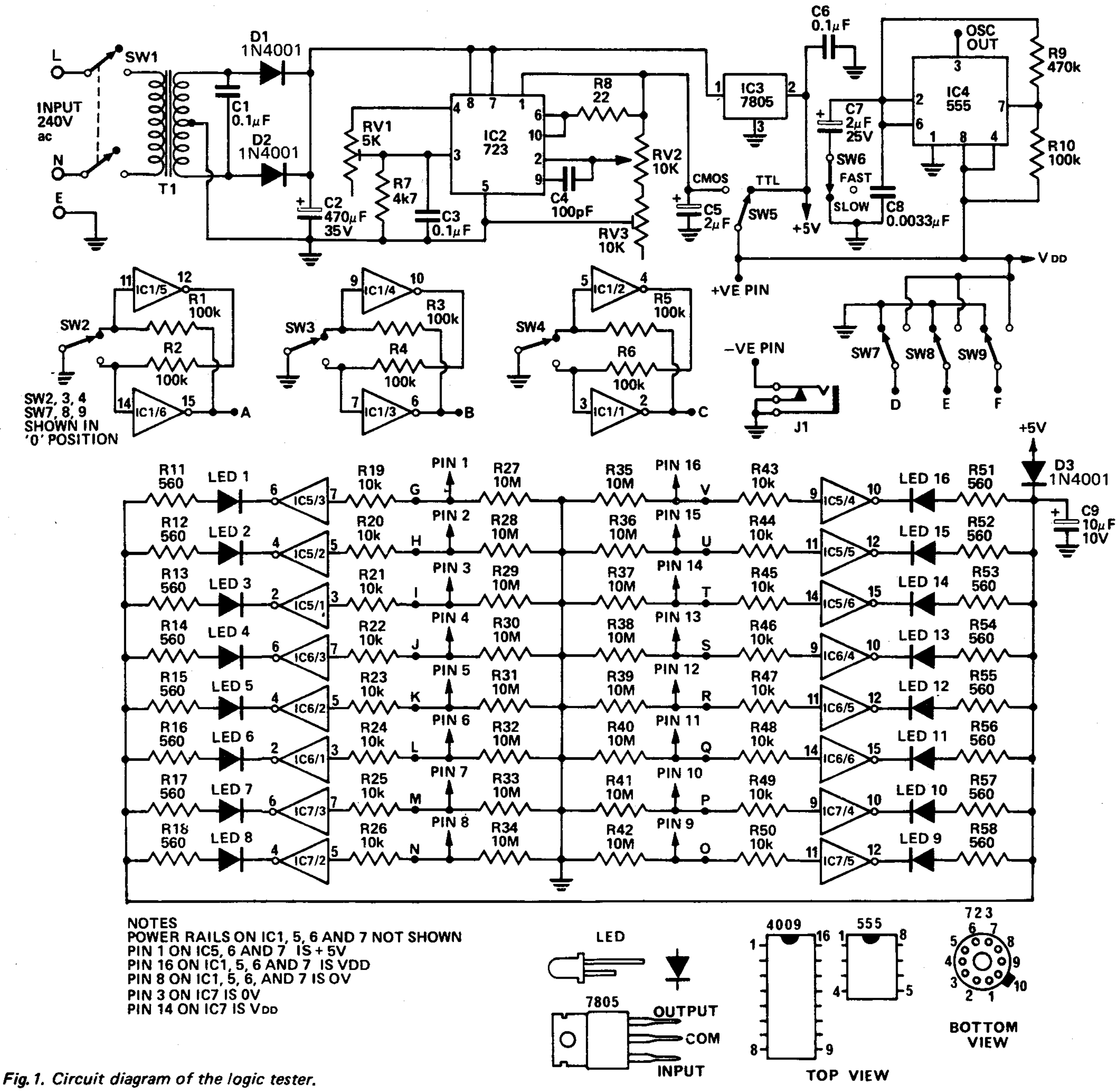

NOTES
POWER RAILS ON IC1, 5, 6 AND 7 NOT SHOWN
PIN 1 ON IC5, 6 AND 7 IS + 5V
PIN 16 ON IC1, 5, 6 AND 7 IS VDD
PIN 8 ON IC1, 5, 6, AND 7 IS 0V
PIN 3 ON IC7 IS 0V
PIN 14 ON IC7 IS VDD

*Fig. 1. Circuit diagram of the logic tester.*

patch-pin on the front panel.

There are six further output pins on the front panel three of which, D, E and F, are set to negative or positive supply by means of toggle switches. As there is no debounce logic associated with these pins they can only be used to set up static conditions and not for clocking counters and shift registers. The remaining three pins are also programmed by switches but these switches are connected to IC1 which contains three RS flip-flops to effectively remove any contact bounce of the switches. This operates as follows. If initially the input of IC 1/5 is earthed by SW2 its output will be high and hence the output of IC 1/6 will be low. When IC 1/6 SW2 is operated again it earths the input of IC 1/6 sending the output of IC 1/6 and input of IC 1/5 high and the output of IC 1/5 low. Since the input of IC 1/6 is connected to the output of IC 1/5 it is held low even if the contacts of SW2 bounce several times when the switch is operated. Thus the output at A is one single transition from high to low (low to high when next the switch is operated). The output of the three debounced switches are labelled on the front panel as A, B, and C.

In the power supply diodes D1 and D2 full-wave rectify the output from the power transformer. The output from the rectifier is smoothed by C2 and regulated to five volts by IC3. The resulting five volt supply is used to drive the LED indicators and to power the TTL device under test. Integrated circuit IC2, a type 723, is a regulator the minimum output of which is set to five volts by RV1 and the maximum of 15 volts by RV3. Front panel control RV2 allows the output voltage to be adjusted between five and 15 volts. The current limit on the output is set to 30 mA by means of R8. SW5 selects the high current five volt supply for testing TTL or the low current variable supply for CMOS. Terminal J1 in the negative supply lead is provided for checking the current drawn by the IC under test. ●

# LOGIC TESTER

*Fig. 2. How the components are mounted on the pc board.*

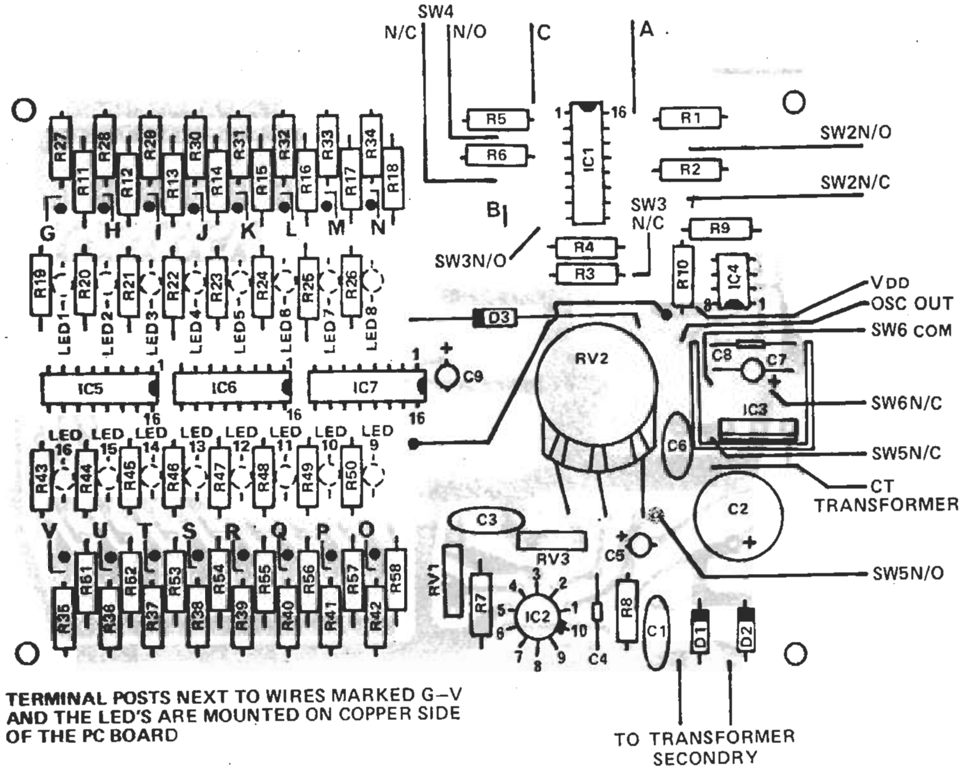

**TERMINAL POSTS NEXT TO WIRES MARKED G–V AND THE LED'S ARE MOUNTED ON COPPER SIDE OF THE PC BOARD**

**PARTS LIST — ETI 122**

| | | | | |
|---|---|---|---|---|
| R8 | Resistor | 22Ω | ¼W | 5% |
| R11,18 | " | 560 | " | " |
| R51,58 | " | 560 | " | " |
| R7 | " | 4 k7 | " | " |
| R19,26 | " | 10 k | " | " |
| R43,50 | " | 10 k | " | " |
| R1,6 | " | 100 k | " | " |
| R10 | " | 100 k | " | " |
| R9 | " | 470 k | " | " |
| R27,42 | " | 10 M | " | " |
| RV1 | Potentiometer | 5 k | Trim type | |
| RV3 | " | 10 k | " | " |
| RV2 | " | 10 k | Linear | |
| C4 | Capacitor | 100 pF | Ceramic | |
| C8 | " | 0.0033μF | polyester | |
| C1,3,6 | " | 0.1μF | " | |
| C5,7 | " | 2μF 25V | electro | |
| C9 | " | 10μF 10V | " | |
| C2 | " | 470μF 35V | " | |
| D1,2,3 | Diode | 1N4001 or similar | | |
| LED 1 — LED 16 | Light Emitting Diodes | | | |
| IC1,5,6,7 | Integrated Circuit | 4009 (CMOS) | | |
| IC2 | " | 723 (metal can case) | | |
| IC3 | " | 7805 (TO-220 case) | | |
| IC4 | " | 555 | | |
| J1 | Jack | small earpiece type | | |
| SW1 | DPST | toggle 240V rated | | |
| SW2-SW9 | miniature | slider switch 2 pole 2 position | | |

PC BOARD ETI 122

IC Socket
Wooden case see text
Transformer 240 V primary 30 V CT secondary
or 2 x 15 V windings

25 patching Pin feed throughs

front panel
3 core flex and plug
heatsink for IC3 (see Fig.6)

*(Text continued from page 71)*

boards. Do not glue the LEDs to the front panel. Once the glue has set, carefully remove the board from the front panel and then solder the LEDs and pins into position. Fit 250 mm long leads to the board for later connection to the switches and power transformer and then, using a minimum amount of heat, solder ICs 1, 5, 6 and 7 into position.

Solder the leads to the pins on the IC socket — the front panel must be cut out so that these leads may be passed through. Now affix the socket to the front panel and install the printed circuit board. Mount the transformer into the base of the box and interconnect the board and switches etc.

The wooden box was constructed from 12 mm thick pineboard such that the outside dimensions were 225 x 148 x 70 mm. We finished our box with coloured high-gloss enamel which

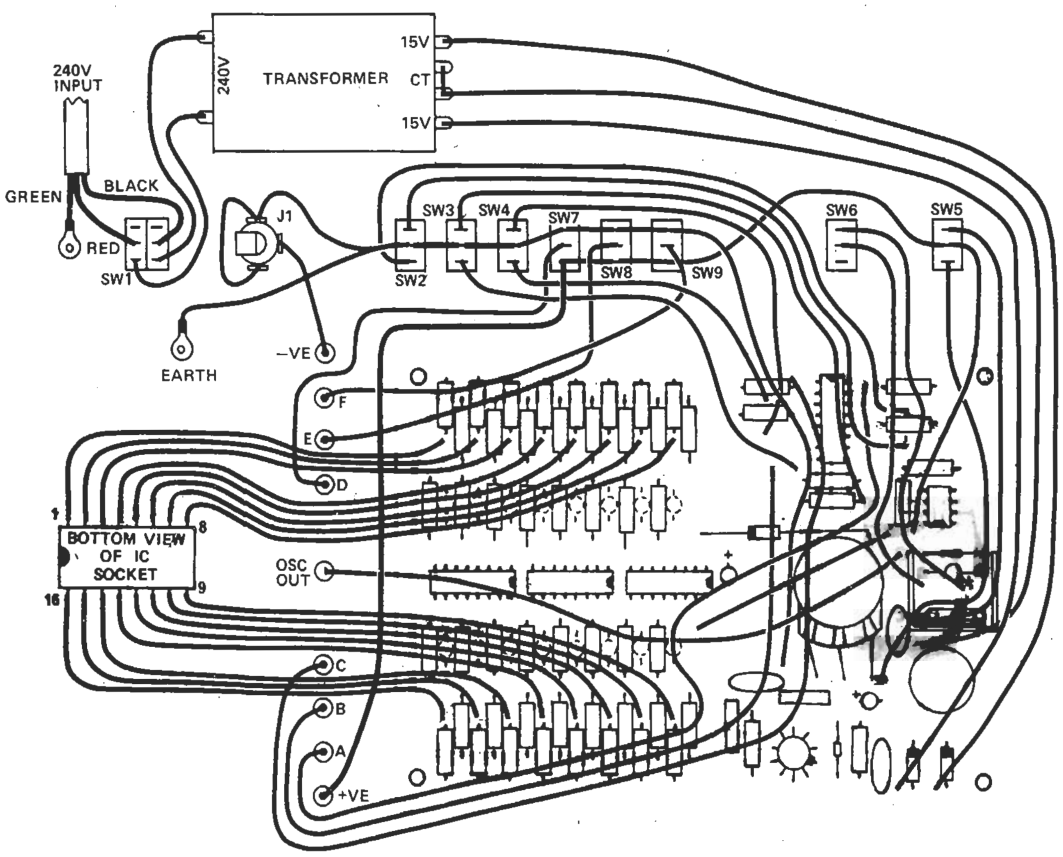

*Fig. 3. Wiring diagram of complete unit.*

# LOGIC TESTER

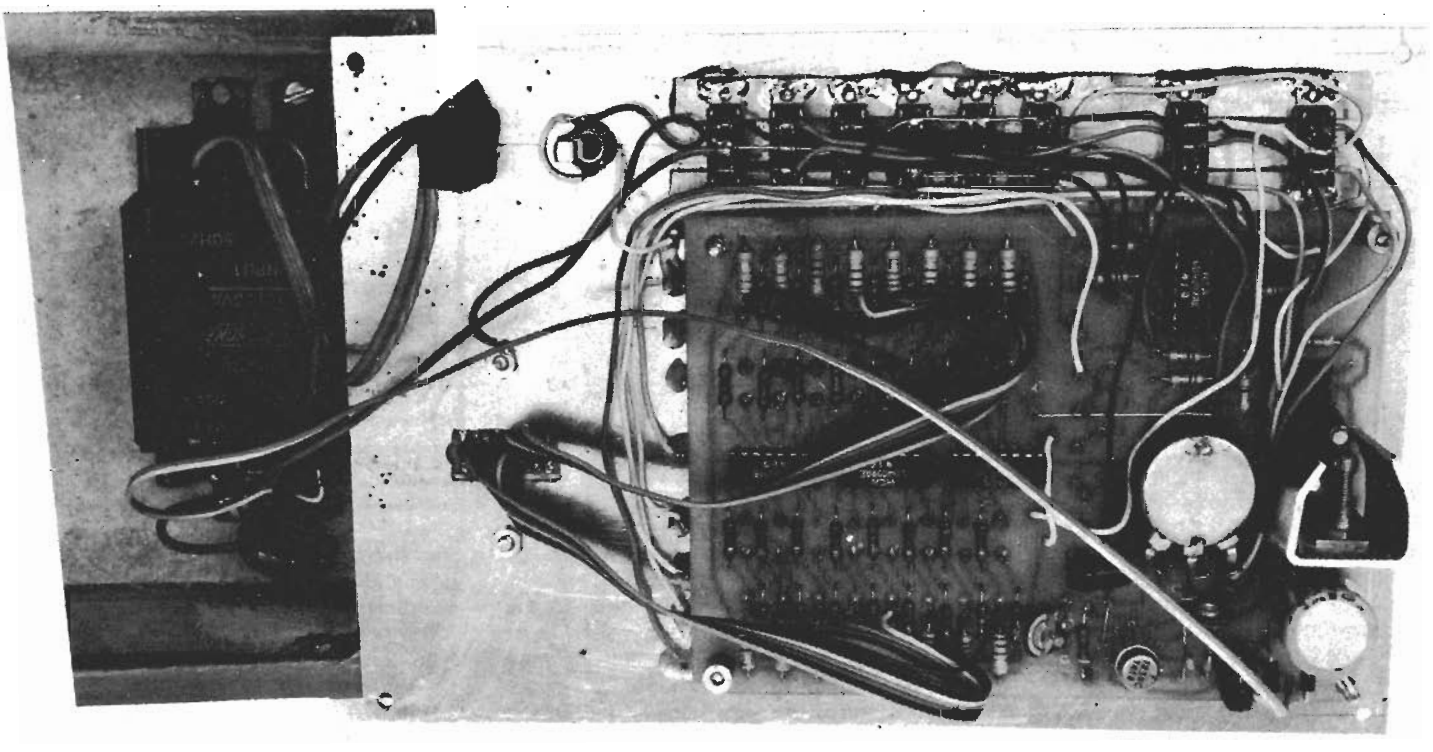

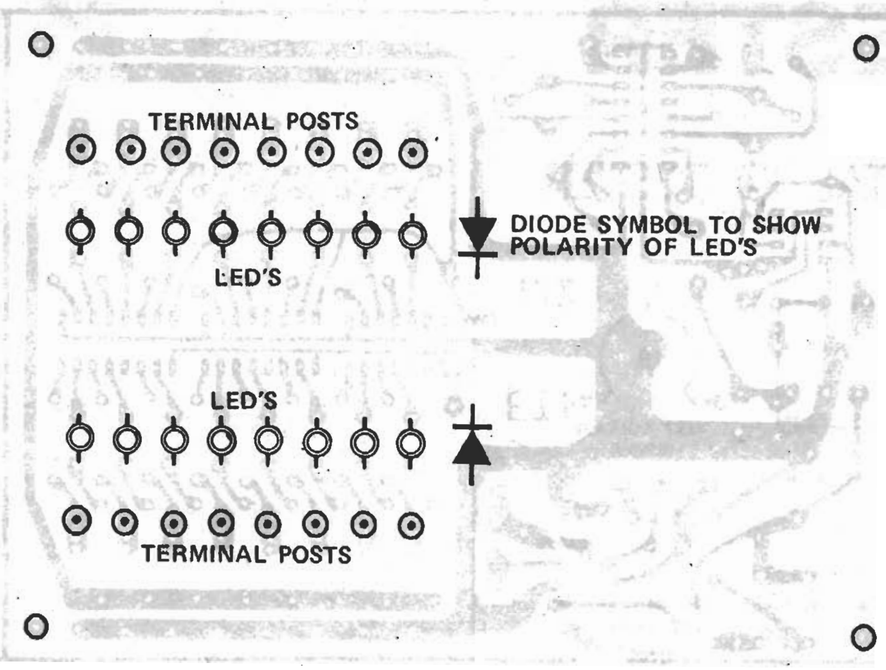

*Fig. 4. Positioning of LEDs and terminal posts on the copper side of the printed-circuit board.*

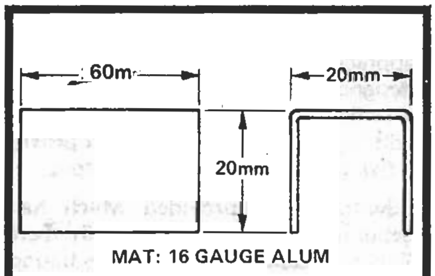

*Fig.6. Heatsink for IC3. The IC is mounted (by a screw) through a 3.2 mm hole in the base of the heatsink (see photograph of inside of unit).*

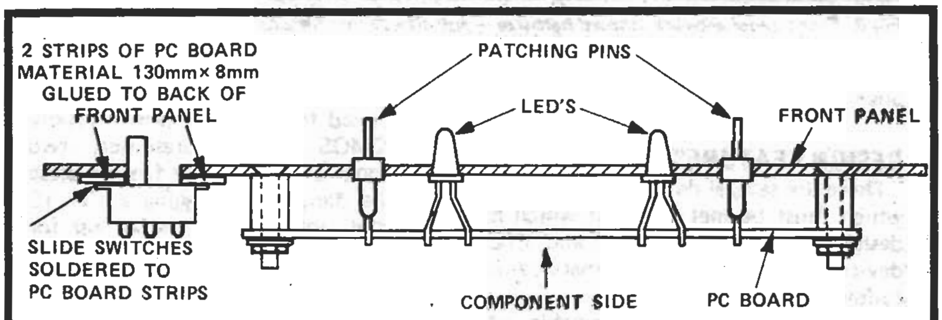

*Fig. 5. How the front panel and printed-circuit board are assembled.*

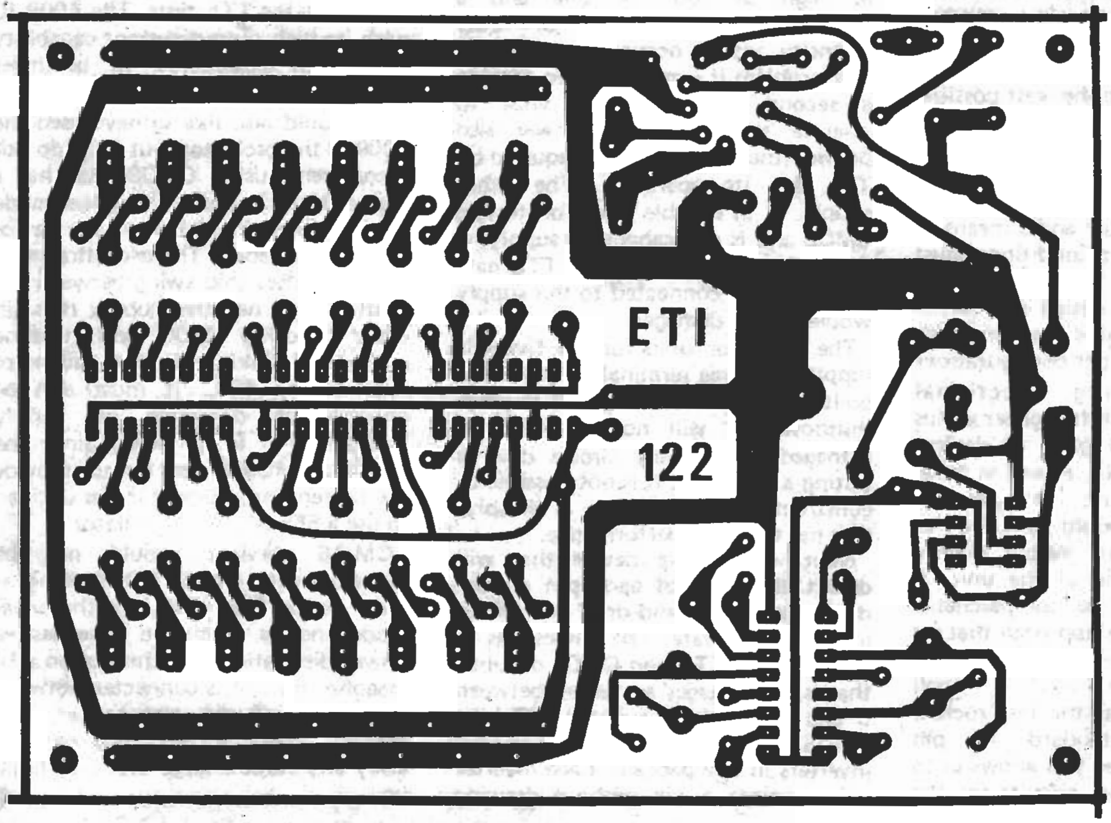

***Fig.7. Printed circuit-board artwork. Full size 142 x 104 mm.***

# LOGIC TESTER

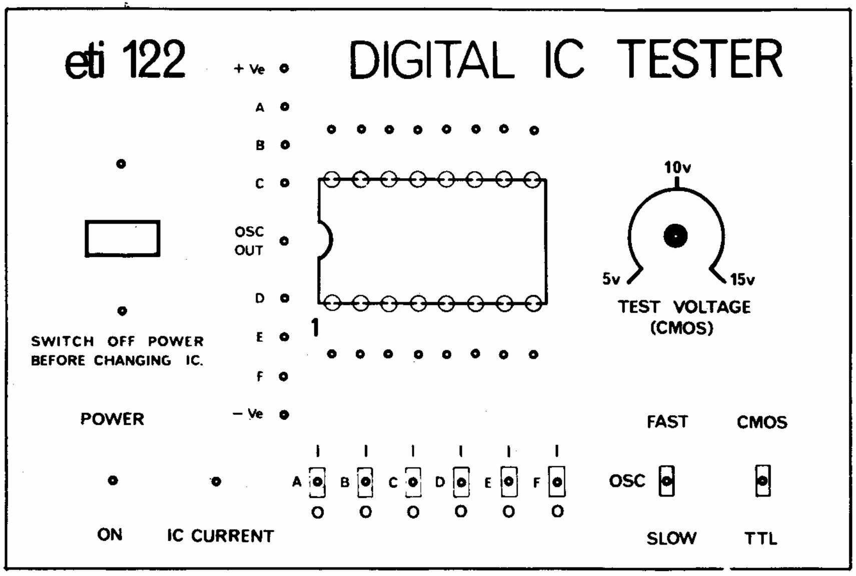

*Fig.8. Front panel artwork (shown half-size — full size should be 223 mm x 148 mm).*

resulted in a very pleasing final appearance.

## DESIGN FEATURES.

There are several design requirements which must be met in a unit which is designed to test both CMOS and TTL devices. These may be summarized as follows.

1) The unit must be capable of correctly testing both types of logic.

2) Simple gate functions should be tested by go/no-go checks and complex functions such as counters and shift registers should also be reliably checked.

3) There should be the least possible chance of damaging the device during testing.

4) CMOS ICs must be testable with a variety of supply voltages.

5) A clock oscillator and a means of setting up the input conditions must be provided.

One of the major design difficulties with a unit such as this is coping with the many different pin configurations of the differing functional requirements (eg a shift register versus a two-input NAND gate) of devices within the one family, as well as those between different families. A multi-way switch could be used for each input pin but would greatly increase the expense of the unit. A good alternative is to use patchable links, and this is the approach that we have chosen to use in our unit. In addition we have used a small breadboard socket as the test socket, rather than a standard 16 pin dual-in-line socket, as this allows us to improvise special test circuits for the more complex logic ICs, and the means to breadboard simple circuits.

The need for a variable power supply for CMOS testing presented two additional problems. The first of these was the danger of plugging a TTL IC into the unit when it is set up for CMOS and for some higher supply voltage than the five volts required for TTL. Secondly the LEDs used for monitoring each pin would draw more current as the supply voltage increased. The current ratio could be as high as four to one and a corresponding variation of LED intensity would occur. To overcome this problem it was decided to provide a second supply of five volts to operate the LEDs which will also provide the higher current required by TTL for its operation. The other supply is a variable one for testing CMOS and is not capable of supplying more than 30 mA. Thus a TTL gate inadvertently connected to this supply would not be damaged.

The regulator used for the five-volt supply is a three terminal IC which has built in current limiting and thermal shutdown. It will not therefore be damaged by a short circuit due to testing a faulty IC. It is not possible to construct a discrete design, as cheaply, that has the same performance.

Next we need a device that will detect the state of each pin on the device under test and drive an LED to indicate that state. The device has to be driven by TTL and CMOS outputs, that is, by voltages anywhere between 5 and 15 volts. A suitable IC is the CMOS 4009 IC which has six inverters in one package. Each inverter will monitor a pin without drawing appreciable current. The 4009 is also designed to translate logic levels. Thus we may use it to monitor a 5 to 15 volt input level at its input but provide a five volt signal only at its output.

Switches are provided which have debounce logic associated with them. This is necessary so that single bounce free rise and fall transitions can be generated for the testing of more complex logic. The debounce logic must be capable of operating on 5 to 15 volts and of sinking at least two milliamps for TTL tests. The 4009 IC with its high output current capability was again considered to be most suitable for this task.

We would also like to have used the 4009 as the oscillator, but RCA do not recommend using CMOS that has a high output capability in a linear mode as the power dissipation of the device may be exceeded. The oscillator must provide pulses that swing between the positive and negative supply rails (in order to drive CMOS) and must be capable of sinking the two milliamps required by TTL. It must also be capable of operating on supply voltages of 5 to 15 volts. Since the standard CMOS devices cannot provide the current requirement it was decided to use a 555 IC as the oscillator.

CMOS devices should not be operated with inputs left floating as some devices may drift into the linear mode and be destroyed by excessive power dissipation. For this reason a 10 megohm resistor is connected between each pin, on the test socket, and ground. These resistors also conduct away any static charge that may build up. ●

Wireless World, March 1977

# Semiconductor tester

This circuit tests transistors and diodes for polarity, and short/open circuits in one measurement. The same tests using a multimeter would require at least four operations.

A three-phase waveform is derived from the low-frequency ring-of-three oscillator, and applied to the device under test via the l.e.d.s. The oscillator waveform enables each pair of device terminals to be forward, reverse and unbiased for one third of a cycle. Current flowing into the device will turn the appropriate red l.e.d. on and current flowing out will turn on the green l.e.d. Thus, the position of the base lead and the polarity of a transistor may be deduced.

Voltage drop across the l.e.ds and device under test is typically 4.5V. A t.t.l. "1" will not source current at this voltage, so 270Ω resistors have been added to source and limit the diode current. Frequency of operation, defined by the CR network, is not critical, but the resistor should not exceed 1kΩ for reliable operation. Oscillator frequency with the values shown is about 2kHz.

N. E. Thomas,
Balham,
London.

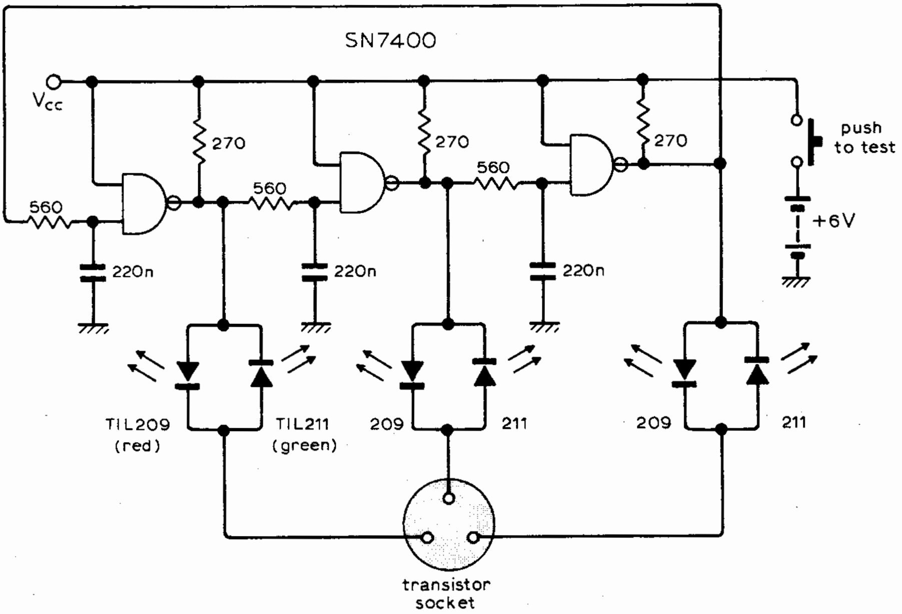

# ONE-TOUCH DIODE TESTER

*Identifies good/bad diodes, and tells which end is anode/cathode.*

BY DAVID MARKEGARD

MOST electronics experimenters seem to have plenty of diodes in their junk boxes—either salvaged from old equipment or purchased at low bulk prices. The problem, usually, is to find out which ones are good, which are bad, and, in the case of the former, which end is which (cathode or anode). Of course, most diodes can be tested using a conventional ohmmeter. However, there are simpler ways, and one is to use the diode checker described here. Simply by touching a diode's leads to its binding posts (in either polarity), you can tell whether or not it is good and identify the anode and cathode.

**How It Works.** Op amp *IC1* forms a simple square-wave oscillator whose output swings from almost full positive to full negative levels with respect to ground.

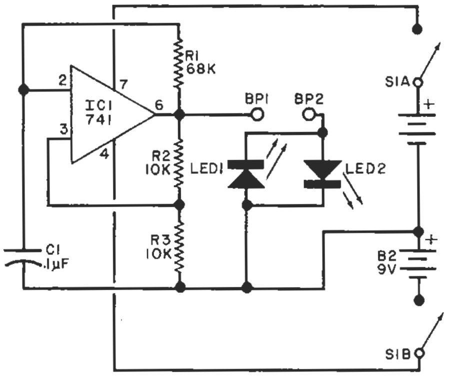

*IC1 is square-wave oscillator. Tested diode turns on either LED.*

**PARTS LIST**

B1,B2—9-volt battery
BP1,BP2—Five-way binding post
C1—0.1-μF capacitor
IC1—741 op amp
LED1,LED2—Red LED (about equal brightness)
R1—68,000-ohm resistor
R2,R3—10,000-ohm resistor
S1—Dpst switch
Misc.—Perforated board, socket for IC1, battery holder, suitable enclosure, grommets for LED's, mounting hardware, etc.

If a good diode is connected between *BP1* and *BP2* with its cathode toward *BP1*, *LED1* is forward biased and glows. *LED2* remains dark because it is reverse biased. If the diode is reversed so that its anode is at *BP1*, *LED2* glows and *LED1* is dark. With the LED's properly identified and placed close to *BP1*, an unknown diode lead connected to *BP1* is easily identified.

**Construction.** The circuit can be assembled on a small piece of perforated board and mounted in small enclosure along with the batteries in holders. The two binding posts and the power on/off switch should be mounted about an inch apart on top of the enclosure. Put the two LED's in rubber grommets near *BP1* and identify them properly.

Before installing the LED's, be sure they are of equal brightness. The values of *R1*, *R2*, *R3*, and *C1* can be varied if the specified values are not available—as long as the circuit oscillates.

**Use.** Connect a diode to be tested between the two binding posts. If only one LED glows, the diode is good and the glowing LED will identify the cathode. If both LED's glow, the diode is shorted. If neither LED glows, the diode is open.

Transistor junctions can be tested by connecting the collector to *BP1* and the base to *BP2*. If *LED1* glows and is brighter than *LED2*, the transistor is npn. If *LED2* glows, or is brighter than *LED1*, the transistor is pnp. ◇

**TEST BENCH**

# Build the low-cost TRANSISTOR OSCI-TESTER

*A-f & r-f tests, checks junctions, identifies type*

BY JOHN F. HOLLABAUGH

THE Transistor Osci-Tester is more than just a simple go-no-go checker. Of course, it does indicate whether the junctions of a transistor are good, but it also determines if the transistor will oscillate at about 5 kHz for audio functions and whether it will provide gain at about 3 MHz for r-f applications. The latter test eliminates the measurement of gain, junction capacitance, and leakage. If the transistor will oscillate at r-f, it must be in good shape. The tester also shows whether the transistor is npn or pnp and silicon or germanium.

**Circuit Operation.** The a-f test is made by including the unknown transistor in a blocking oscillator circuit consisting of *T1*, *C1*, *R1*, and *R2*. Resistors *R1* and *R2* determine the operating bias of the unknown to give a partial indication of the operating frequency.

The oscillator output is passed through *C2* to drive a dc voltmeter consisting of *D4*, *Q1*, *Q2*, and *M1*. The quiescent (zero) current of *Q1* is balanced by the channel resistance of *Q2*, which has zero bias and matches the zero bias of *Q1*. Diode *D4* rectifies the oscillator output, producing the negative voltage required to drive *Q1*. The setting of potentiometer *R5* balances the relative quiescent voltage drops across the channels of *Q1* and *Q2*.

The r-f test is made by connecting the unknown transistor in a Pierce oscillator consisting of a crystal (channel 5 used in prototype), *R5*, *R3*, *R4*, and *C3*. In this circuit, the base of the unknown transistor is driven by the collector output through the crystal. This produces positive feedback at the crystal frequency. If you want to check the harmonics of the crystal frequency, loosely couple the r-f oscillator output to the receiver antenna.

In some cases, increasing *R3* to 560,000 ohms will improve r-f oscillation.

The third portion of the tester converts it into a one-volt dc meter, which is used to measure the forward voltage drop (barrier voltage) across the forward biased base-emitter junction of the unknown transistor. Voltage of the correct polarity is determined by the setting of *S2* which applies this current through *R7*. The meter then indicates the approximate 0.3-volt drop of a germanium junction or the approximate 0.7-volt drop of a silicon junction. Diodes *D1* and *D2* are a silicon and a germanium connected in series to limit the open-circuit voltage to about 1 volt when the transistor under test is disconnected.

**Construction.** The circuit can be assembled in any way. The prototype was built on a piece of perf board and put in a small plastic case. The meter and necessary switches were installed on the front panel.

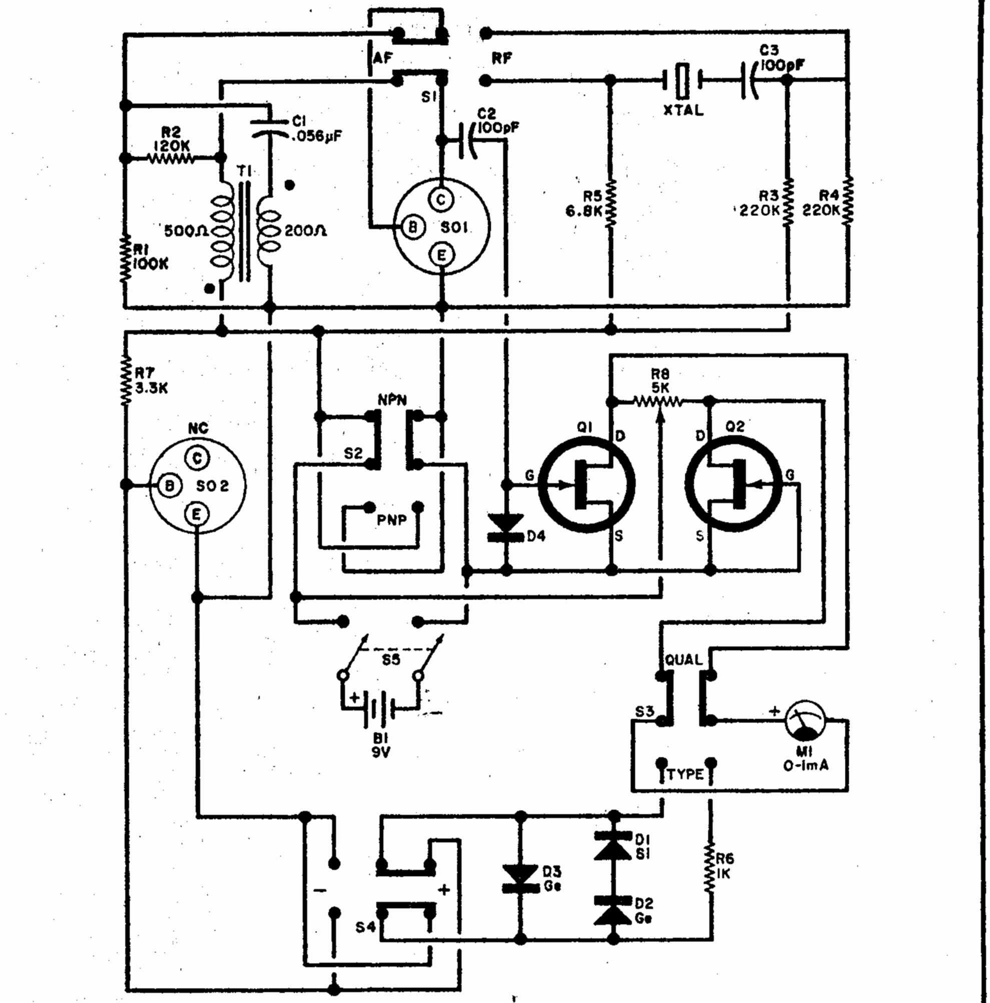

## PARTS LIST

*B1—9-volt battery*
*C1—0.056-μF capacitor*
*C2,C3—100-pF capacitor*
*D1—Silicon diode*
*D2-D4—Germanium diode*
*M1—0-1-mA meter*
*Q1,Q2—HEP801 transistor*
*R1—100,000-ohm resistor*
*R2—120,000-ohm resistor*
*R3,R4—220,000-ohm resistor*
*R5—6800-ohm resistor*
*R6—1000-ohm resistor*
*R7—3300-ohm resistor*
*R8—5000-ohm potentiometer*
*S1-S4—Dpdt switch*
*S5—Dpst switch*
*T1—500:200-ohm transistor driver transformer (Radio Shack 273-1581 or similar)*
*XTAL—CB crystal (channel 5 used in prototype)*
*Misc.—Battery holder and connector, mounting hardware, etc.*

Tester circuit consists of blocking oscillator, r-f oscillator and dc voltmeter.

**Operation.** Connect the unknown transistor to *SO1*. Place *S1* in the AF position, S3 in the QUAL position, and turn on the power. Operate S2 for a meter indication. The position of S2 will indicate the transistor type. If you get a meter indication, the transistor will oscillate at audio. Switching *S1* to RF will show whether the transistor will operate at r-f.

With the transistor in SO2 and S3 in the TYPE position, operating *S4* will show either a low-scale indication for germanium types or a high-scale indication for silicon types of transistors. ◆

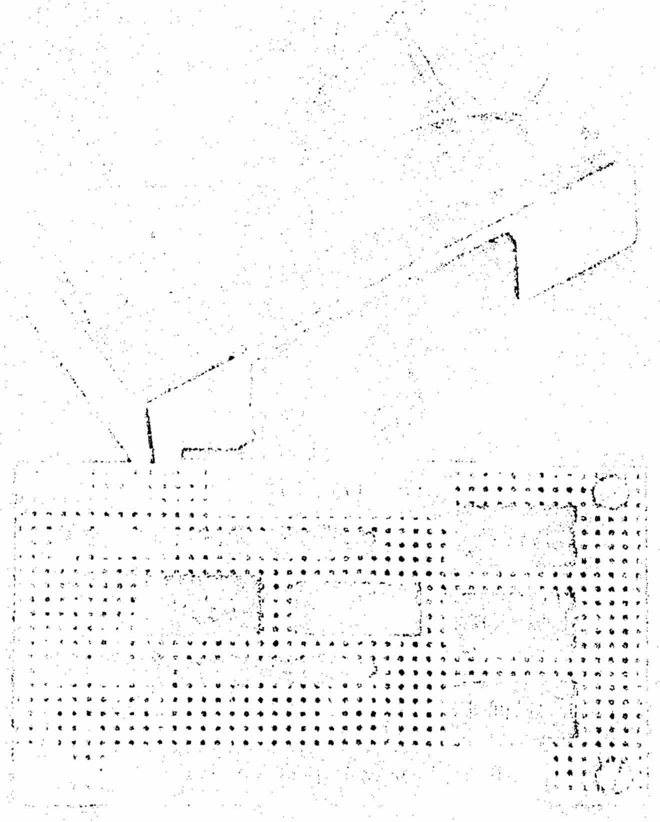

# Build A Digital IC Identifier/Tester

YOU HAVE JUST FINISHED A PROJECT using digital IC's and after applying power, the darned thing just sits there or goes up in smoke! Several hours of troubleshooting leads to the discovery that one (or more) of the IC's is defective. Out comes the old soldering iron and a lot more time is wasted.

Sound familiar? Well, it happens all the time unless you pay premium prices for your IC's. This kind of trouble surely takes much of the pleasure out of building projects. But take heart - help is here. A small investment of time and money to build this Identifier/Tester will pay handsome dividends. With this instrument on your workbench, you can save your blood pressure and your money.

This easily built device will enable you to quickly and easily test any 8- 14- or 16-pin digital IC whether it is RTL, DTL, TTL, CMOS or several other types if you exercise some care. Of course, it works like a charm with the old standby TTL's. Now, instead of paying for first-quality IC's, you can buy the "cheapies" knowing that you can assort out the rejects and never again wire in a bad IC. If that is not enough for you, there is a hidden bonus in this little device.

You don't even have to buy the "cheapies"--you can buy the "super cheapies." These are the bulk packs of mixed, untested IC's of which some are marked, some are unmarked, and some are marked with factory numbers that may as well be Greek. Best of all, these IC's cost only about two cents each!

The Identifier/Tester (if you haven't already guessed) will *identify* IC's as well as test them. Actually, it will enable you to identify *many* IC's–some are simply too complex to decipher. So, you pay a couple of cents per IC and, even if you throw out two-thirds as bad or unidentifiable, that is still just six cents per IC. While that is not bad at all, the "throw-outs" run only one-third to one-half of the big economy packs.

## How it works

The Identifier/Tester is really quite simple. It is nothing more than three IC sockets (labeled WIRE, TEST and POINT) connected in parallel and 16 LED indicators (Fig. 1), one indicator per socket pin. The LED indicators are transistor-driven to reduce loading on the IC being tested. This is necessary to prevent false indications and erratic operation of some IC's, which would occur if the LED's were connected directly to the pins.

Four of the LED's are smaller than the others. They correspond to pins 4, 8, 9, and 13. The purpose of having these LED's smaller (or a different color) is to make it easier to count the pin numbers.

A fourth socket is labeled SOURCE. It

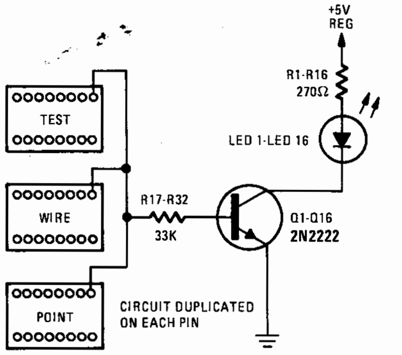

**FIG. 1—IDENTIFIER/TESTER circuit. The corresponding pins on each socket are connected in parallel and connected to an LED indicator circuit.**

### PARTS LIST

R1-R16—270-470 ohm, 1/4 watt, 10% (see text)
R17-R32—33,000 ohm, 1/4 watt, 10%
R33—1000 ohm, 1/2 watt, 10%
R34—330 ohm, 1/2 watt, 10%
Q1-Q16—2N2222 or similar switching transistor
LED1-LED16—LED's of size and color to suit (MV5054 or equal.)
Misc.—perforated board, binding posts, four 16-pin IC sockets, 4½ × 2½ × 1-inch chassis.

serves as a source of four different voltages. When working with TTL's, these voltages are: HI (+5 VDC), LO (0 VDC), LO5 (+5 VDC through a 1K resistor), and HI0 (0 VDC through a 330-ohm resistor). The HI0 voltage is not used in testing but is necessary in the IC identification procedure. These voltages are wired to the pins as shown in the detail drawing of the SOURCE socket (Fig. 2).

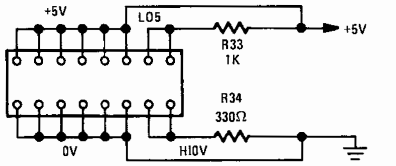

**FIG. 2—LOGIC LEVELS are obtained from the front-panel source socket.**

The three sockets on the right side of the panel (WIRE, SOURCE, and POINT) are not used as sockets at all. They are used as compact connectors for temporary application of voltages to the pins of the IC in the TEST socket. Though the POINT socket may be omitted, it is very convenient for making touch-and-go voltage-applications without getting mixed up with the connections already made to the WIRE socket.

## Construction

Parts used in the construction of the Identifier/Tester are *not* critical. Your junk box will probably provide most of them. If not, the parts are readily available.

The LED dropping resistors should be adjusted for the general IC families that are most often encountered. The 270-ohm value shown on the schematic is best for TTL's and their 5-volt power-supply. Resistors of 390 ohms were used in the prototype in anticipation of testing higher voltage IC's. They also work fine with 5V TTL's; the LED's are just a little dimmer.

As to transistors, almost any small-signal NPN transistor will be suitable. Low cost switching transistors are ideal. The type certainly is not critical—apparently anything that will wiggle the needle on a simple transistor checker will work fine.

Point-to-point wiring was used in the prototype. It looks like a rat's nest but operates fine since there is no interaction between various parts of the circuit. A printed-circuit board could be used but that seems such a waste of effort when building only one or two.

Perforated board is used for the front panel and for mounting the resistors and transistors internally. The internal board is attached to the panel by a "wire hinge" so that it can be folded parallel to the panel. The boards were cut to fit a small chassis. A plastic box could be used as well.

The prototype was built on a chasis measuring 11.5 × 6.5 × 2.5 cm (4½ × 2½ × 1 inch). That is about as small as one can use with point-to-point wiring. Even with a printed-circuit board, the box should not be smaller or the instrument will be too difficult to handle conveniently.

Note that a power supply is *not* included in the prototype. For TTL's, a *regulated* positive 5 volts DC is brought in through the binding posts at the top. This arrangement permits easy use with other voltages when testing other IC families. The supply may be built-in if a larger box is used. A suitable internal or external 5-volt supply is shown in Fig. 3. It is strongly recommended that the power be regulated with one of the IC regulators that provides for both thermal and over-current shutdown. This will offer protection in cases involving shorted IC's and mistakes in wiring between the SOURCE and WIRE sockets.

### POWER SUPPLY

R1—50 ohm, 10 watt, 10%
R2—270 ohm, 1/4 watt, 10%
C1—1000 µF, 35 volt DC
D1—1N4002
IC1—7805 5-volt regulator
S1—SPST switch
LED1—red LED (MV5054 or equal.)
T1—117-volt primary; 12.6-volt, 1.2-amp secondary
F1—1/2-amp fuse

When construction is completed, test the instrument as follows:

**Check for continuity** (ohmmeter) between corresponding pins of the TEST, WIRE, and POINT sockets.

**Check for shorts** between any pins on one of these three sockets.

**Apply power** to the device through the binding posts—*NO* LED's should turn on.

**Check for proper voltage** on each pin of the SOURCE socket.

**Apply +5 volts** from the SOURCE socket to each pin in turn on the POINT socket. The corresponding LED (only) should turn on as each pin is touched.

**If any** of these checks fail, remove power and correct the wiring error(s) in the instrument.

## Testing digital IC's

When first using the tester, the listed steps should be followed exactly. It will be possible to take some shortcuts without too much risk after you have gained some experience.

**Step 1.** Remove all power from the tester.

**Step 2.** Insert IC into the TEST socket. IC's with less than 16 pins should always be mounted on the left end of the socket to avoid confusion in pin numbering while testing. (This is where the smaller LED's are very helpful.)

**Step 3.** Wire +5 volts and 0 volts to the appropriate power pins of the IC by placing jumper wires (No. 22 or 24 wire) between the SOURCE and WIRE sockets.

**Step 4.** Apply power to the tester.

**Step 5.** Quickly observe the LED's; if *all* are on, remove power and check Step 3. If Step 3 is correct, IC is shorted; discard it. If wiring change is made, return to Step 4. If V+ and some LED's (but not all) are on, proceed.

**Step 6.** Apply "finger test" to IC. If it is hot or warm to the touch, remove power. Check wiring and return to Step

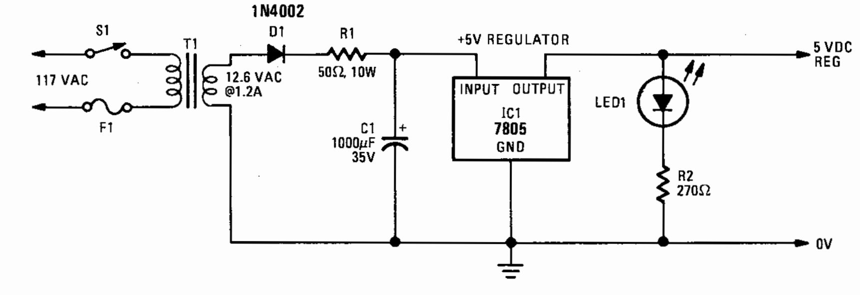

**FIG. 3—REGULATED POWER SUPPLY is suitable for TTL and CMOS IC's.**

4. If IC again comes up hot, there is an internal short—discard it.

**Step 7.** Observe the LED's. If only the LED connected to the $V_{cc}$ pin is on, suspect an open circuit in the internal power wiring of the IC. Normally, unconnected input pins will float high and some output pins will be high, thus lighting some of the LED's. Proceed to the next several steps to confirm the open circuit before discarding the IC.

**Step 8.** Remove power from the tester.

**Step 9.** Wire 1's (+5) and 0's to the input pins (jumpers between SOURCE and WIRE) as required by the function and pinout of the IC under test.

**Step 10.** Wire LO5 from the SOURCE to any pins that are open collector outputs. This is a pull-up voltage which makes it possible for the LED to accurately indicate the outputs.

**Step 11.** Apply power.

**Step 12.** Observe the output pin LED's to determine whether or not they are behaving as expected.

**Step 13.** When testing such IC's as flip-flops, counters, registers, multivibrators and the like, it will be necessary to make and break a connection several times while observing the LED's. This is most conveniently done by just touching the wire to the proper pin on the POINT socket rather than inserting it into the WIRE socket.

**Step 14.** If the outputs do what the pinout (or data book) indicates they are supposed to do as you manipulate the inputs, the IC is good and can be wired into your project without fear that it will cause a problem.

That is about all there is to testing an IC. The simple ones such as gates, flip-flops and counters, can be checked out very quickly. The more complex IC's require more time, but even they are easy and a little experience will make checking them quick, too.

### Identifying Unknown IC'S

Identifying an unknown IC can be a tricky business, especially if it is one of the more complex ones. The less complex are rather straightforward. The following procedure has been found to produce the best results:

**Step 1.** Insert IC into the TEST socket.

**Step 2.** Briefly touch each pin of the POINT socket with +5 volts (from the SOURCE socket) observing the LED's as you do so.

**Step 3.** If all or many LED's turn on as +5 volts is applied to *every* pin, discard the IC.

**Step 4.** If only the LED for the pin with +5 volts applied turns on *every* time, discard the IC.

**Step 5.** [14-pin DIP's] If pin 7 and pin 14 turn on many LED's and most other pins do not, pin 7 is GND (0V) and pin 14 is $V_{cc}$ (+5V).

**Step 6.** [16-pin DIP's] If pins 8 and 16 turn on many LED's and most other pins do not, pin 8 is GND (0V) and pin 16 is $V_{cc}$ (+5V).

**Step 7.** Most non-military IC's (TTL) will display the pin 7 and pin 14 or the pin 8 and pin 16 combination.

**Step 8.** If one of those combinations does not appear, note which pins turn on many LED's—one is GND and one is $V_{cc}$.

**Step 8.1** Check your catalogs of IC pinouts; the odd combination itself may identify the IC.

**Step 8.2** If not, make a guess—apply +5 to one and 0 to the other.

**Step 8.21** If the IC gets warm to the touch, reverse the leads and try again (the IC may not be damaged).

**Step 9.** Apply power to the IC ($V_{cc}$ and GND).

**Step 9.1** Since floating inputs go high, the input LED's will be on.

**Step 9.2** Some output pin LED's will be on.

**Step 10.** Briefly, apply HI0 (GND through 330 ohms) to each pin with a high logic-level.

**Step 10.1** Each pin pulled low (LED turned off) by the applied HI0 may be labeled an input pin since few high outputs will be pulled low by this procedure.

**Step 10.2** Those that are not pulled low *and* those that are low may be labeled output pins.

**Step 11.** Knowing $V_{cc}$, GND, INPUT and OUTPUT pins, match this information with the pinout diagrams in your catalogs and/or data books.

**Step 11.1** If positive identification is made, test the IC and mark it with its proper number using a carbide scriber.

**Step 11.2** If several possible identifications are made, test the IC for each possibility.

**Step 11.3** If no identification can be made, further experimentation may reveal additional facts to make identification possible.

**Step 11.31** Generally, flip-flops will change output states (toggle) when the T output is grounded and ungrounded.

**Step 12.** If an IC cannot be identified, put it aside to try again after you have gained some experience.

**Step 13.** Do not expect to identify them all; some are very complex little monsters—even some of the 14-pin DIP's!

Note that you will sometimes find an IC that is part good and part bad. For example, there may be only two or three good gates in a 7400 or a 7473 may have one good flip-flop and one bad one. Of course, you can throw them out but, if they don't get mixed up with your good ones, they can come in quite handy.

The solution is to mark a partly-bad IC so that you won't wire it into a circuit requiring a fully operational IC. Then, you can keep it until you run into a project that requires fewer functions than are to be found in one IC.

TTL and CMOS are the most popular IC families. Probably most of your work will be with these types. If so, consider wiring up for and building in a 5-volt supply. The TTL's use 5 volts and most CMOS devices will operate with the same voltage.

Now you have an instrument for testing and/or identifying many types of IC's. You will find it good practice to test *every* IC before wiring it into a circuit. Even premium quality IC's are sometimes bad and the testing can be done quickly. The Identifier/Tester will prevent a lot of grief on the workbench. **R-E**

---

### CB training workshops start in Indianapolis

More than 50 technicians attended the first of a series of Forest Belt Training Workshops, held in the Airport Holiday Inn, Indianapolis, during the last week of January.

The first three days of the five-day program were spent in exploring the basics of CB servicing—studying phase-locked loops, single sideband, modulators and demodulators, AGC, ANL and other CB fundamentals. The third day treated specific troubleshooting.

The fourth and fifth days were devoted to studies in preparation for the FCC Second Class Radiotelephone license.

A number of awards were given out at the banquet that concluded the program. NESDA (*N*ational *E*lectronic *S*ervice *D*ealers *A*ssociation) awarded three gift memberships. High point of the banquet was the Hickok Prize, which consisted of the right to choose between a Hickok model 388 In-Line frequency counter and power/VSWR/modulation meter, or to put the ticket into a grand-prize drawing at the last of the series of fifteen 1977 workshops. The winner of that 15-person drawing will receive an entire Hickok COMM-Line six-instrument service center.

**AUTHOR-INSTRUCTOR FOREST BELT, former editor of Radio-Electronics, explains a point in his trademarked *Easi-Way Servicing*.**

Further workshops are planned at Atlanta, Baltimore, St. Paul, Boston, Chicago, again at Indianapolis and probably one at Toronto. Enrollment fee for a five-day workshop is $280. For further information, write for Brochure 24 to: Forest Belt's Training Workshops, Box 68120, Indianapolis, IN 46268. **R-E**

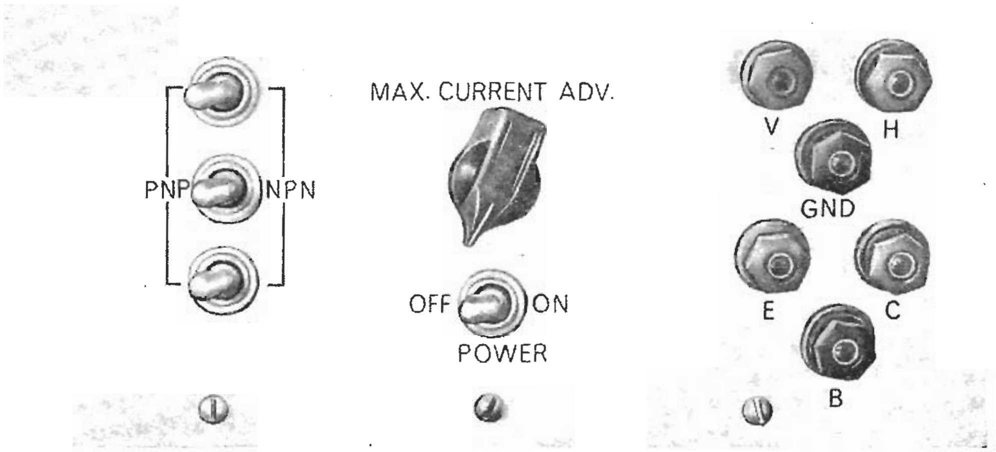

# BREAKDOWN REVERSE VOLTAGE TRANSISTOR AND DIODE TESTER

NONDESTRUCTIVE "ONE-SHOT" SCOPE TECHNIQUE USED TO REVEAL SEVERAL CHARACTERISTICS AT ONCE

**By CHARLES D. RAKES**

FOR EACH different transistor parameter, there is a test procedure that can be set up and followed in order to predict a transistor's ability to live up to its specifications. While there are many different specifications for a transistor, not all of them must be up to par in any one application. For most applications, it is usually sufficient to know that a transistor will work in a given circuit, without being too concerned about the transistor's capabilities in excess of the circuit's requirements. Quite often you can take advantage of the commercially accepted tolerance of ratings by going through a batch of less expensive transistors and selecting those that will work in your circuit.

For example, if a transistor is rated to withstand a reverse voltage across the collector and base elements of, say, 100 volts, you wouldn't care whether or not the transistor breaks down at 75 volts when the most voltage it will see in a

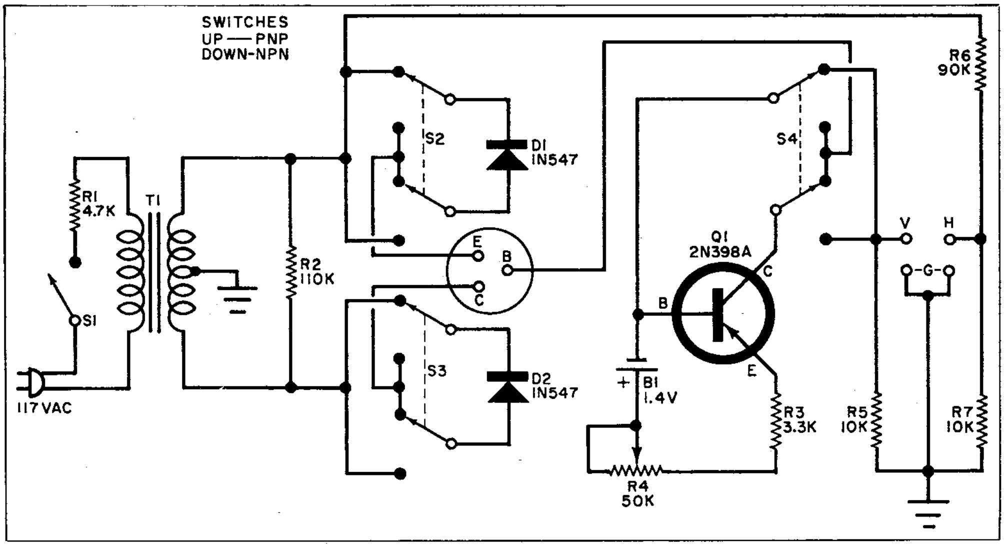

Fig. 1. Reverse voltage is applied alternately across the emitter-base junction and the collector-base junction of the transistor under test by the combined action of diodes D1 and D2 on the a.c. voltage from the transformer. Transistor Q1 acts as a current limiter. Potentiometer R4 can be adjusted to limit maximum current flow to a predetermined value. Zener diodes and other diodes as well as neon lamps can be checked out with this adapter. Output voltages are fed to an oscilloscope for interpretation.

given circuit does not exceed 9 volts. But you wouldn't want to put this transistor into a 90-volt circuit. By the same token, if the transistor checked out at 120 volts, there's no reason why you couldn't insert this component into a 110-volt circuit.

Many fine, inexpensive transistor testers are available that can predict gain and leakage, but none of them can tell you anything about the figure for reverse breakdown voltage. One way to check reverse breakdown voltage is to gradually apply an increasing amount of voltage until the transistor breaks down. Once you do that, you will know what the breakdown voltage is, and you will also have to junk the transistor. It's like testing a fuse to find out how much current it will take to make it pop. There is no trick to a destructive-type test and there *is* a point of no return that most of us would object to. The way to avoid destruction of solid-state components even in the presence of potentials in excess of the breakdown voltage is to limit the amount of current to prevent thermal runaway.

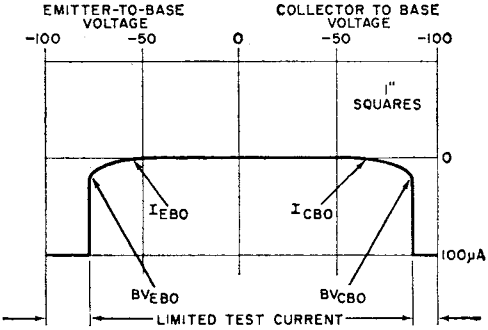

Fig. 2. Trace obtained when testing a good transistor can be analyzed as follows: left portion of curve shows what happens when reverse voltage is applied across emitter-base junction; right side indicates collector-base junction characteristics. Trace also shows cutoff and reverse current.

If you have an oscilloscope, you can take a page out of a transistor manufacturer's notebook; and if you build the simple, low-cost circuit presented here, you can perform a non-destructive test to check both emitter-to-base reverse breakdown voltage, and collector-to-base reverse breakdown voltage. With this circuit, you will also be able to determine emitter cutoff current and collector cutoff current. All four of these parameters can be ascertained from a single scope trace, in a "one-shot" type of test. The procedure is rapid and lends itself to mass production techniques.

As a sort of bonus feature, this same

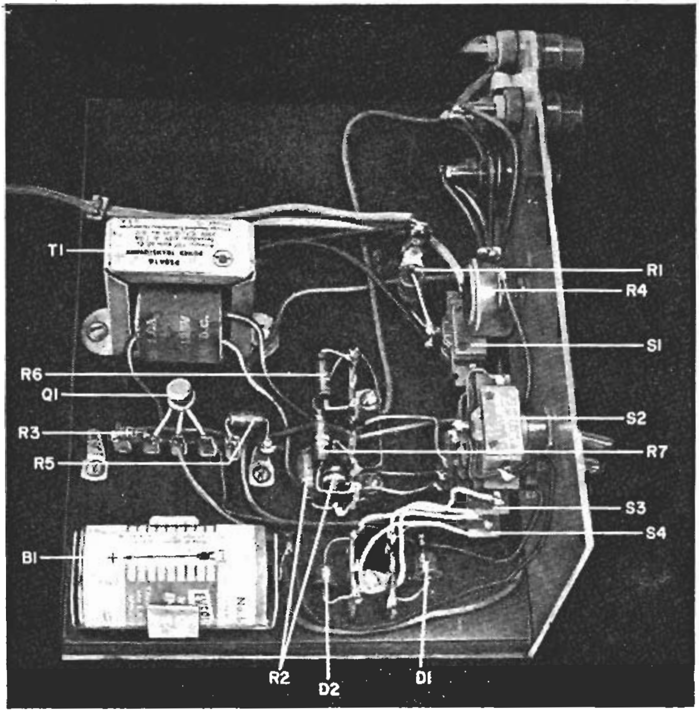

Fig. 3. Layout of components is not critical. Two resistors are shown connected in parallel to obtain proper value for R2. A 3-gang d.p.d.t. switch can be used instead of separate switches for S2, S3, and S4. Observe polarity of B1, D1 and D2.

### PARTS LIST

*B1—1.4-volt mercury battery*
*D1, D2—1N547 diode*
*Q1—2N398A transistor*
*R1—4700-ohm, 2-watt resistor*
*R2—110,000-ohm, 4-watt resistor—see text*
*R3—3300-ohm, ½-watt resistor*
*R4—50,000-ohm potentiometer*
*R5—10,000-ohm, ½-watt resistor*
*R6—90,000-ohm, ½-watt resistor*
*R7—10,000-ohm, ½-watt resistor*
*S1—S.p.s.t. switch*
*S2, S3, S4—D.p.d.t. switch*
*T1—Power transformer: primary, 117 volts; secondary, 250 volts with center tap (Stancor PS8416, or similar)*
*Misc.—Terminal strips, binding posts, chassis, hardware, etc.*

test procedure will let you determine the zener voltage of zener diodes, the reverse breakdown voltage for low-peak-inverse-voltage diodes, and both the firing and holding voltages of neon lamps.

**How It Works.** With this test circuit, units under test are subjected to a maximum reverse voltage of about 100 volts. The "maximum-current" range is adjustable from approximately 20 μA to 500 μA. The amount of maximum current that can be safely passed through the transistor under test depends upon the power that can be safely dissipated in the tested unit. If a large number of units are to be checked, the voltage and current limits can be grease-penciled on the oscilloscope screen for a quick go-no-go selection.

As shown in Fig. 1, switches *S2*, *S3*, and *S4* are in the *PNP* position, and the anodes of diodes *D1* and *D2* are connected to the emitter and collector test jacks respectively. The base test jack is returned to ground through current sampling resistor *R5*.

The voltage developed across *R5* is fed to the vertical input of the scope through test jacks marked *V* and *G*. The scope's horizontal sweep is controlled by the voltage that appears across the 10 to 1 voltage divider resistors *R6* and *R7* and which is fed out through the terminals marked *H* and *G*.

**Emitter-To-Base Reverse Voltage.** When the top of *T1* goes negative with respect to ground, *D1* conducts, and sends the emitter voltage (with respect to base) of the transistor under test in the nega-

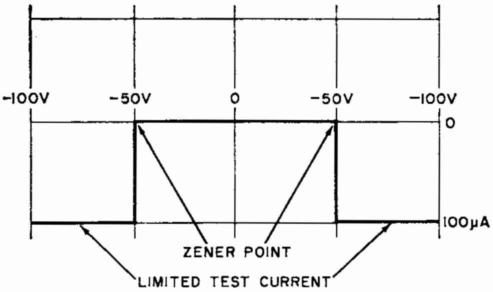

Fig. 4. Typical scope trace of good zener diode is shown here. Right half reveals same information as left half, and is actually redundant. Single-sided patterns can be just as easily obtained. See text.

tive direction and causes a downward deflection of the scope's trace when this voltage breaks through the emitter base junction. Keep in mind that this potential across the emitter and base is reverse voltage. Also, the voltage at the top end of *R6* and *R7* at this time is negative with respect to ground. As the voltage swings in the negative direction, the scope's spot travels from the center of the screen towards the left to display a horizontal trace.

The action of the scope's trace can be understood by an examination of Fig. 2. Note that as the negative horizontal voltage increases the reverse voltage across the emitter and base is also increasing, and at about 75 volts the curve drops sharply—this is the point of voltage breakdown.

During the time that the emitter-to-base-junction is subjected to this reverse voltage, *D2* blocks the collector current of the transistor under test and leaves the collector in an essentially open-circuited condition. This open-circuit condition satisfies one of the requirements for determining the specification for reverse voltage breakdown.

## REVERSE VOLTAGE AND CURRENT CUTOFF PARAMETERS

$BV_{CBO}$: Collector-to-base d.c. breakdown reverse voltage with the emitter circuit open. Collector current ($I_C$) should be specified.

$BV_{EBO}$: Emitter-to-base d.c. breakdown reverse voltage with the collector circuit open. Emitter current ($I_E$) should be specified.

$I_{CBO}$: Collector d.c. current cutoff when the collector junction is reverse-biased with the emitter circuit open. Collector base voltage ($V_{CB}$) should be specified.

$I_{EBO}$: Emitter d.c. current cutoff when the emitter junction is reverse-biased with the collector circuit open. Emitter base voltage ($V_{EB}$) should be specified.

During the time that the applied voltage is in excess of the breakdown voltage, current is limited to prevent destruction of the component under test by the action of circuit *Q1*, *R3*, *R4*, and *B1*. Potentiometer *R4* can be adjusted to increase or decrease the maximum current.

As the voltage across the secondary of *T1* swings back to zero, the spot on the screen retraces its path, and returns to its central point on the zero reference line.

**Collector-To-Base Reverse Voltage.** When the polarity of the a.c. voltage across *T1* reverses, a positive voltage appears across *R6* and *R7* and pulls the spot horizontally from the center of the screen to the right. The positive voltage on the cathode of *D1* also blocks the emitter current of the transistor under test, effectively opening the emitter circuit. The negative voltage on the anode of *D2* now completes the collector-to-base circuit through *Q1*. The trace on the right side of the scope indicates the collector-to-base reverse voltage breakdown. Here again the requirement for the third element in a transistor to be open-circuited when checking for reverse voltage breakdown is satisfied.

The same action takes place for an *npn* type of transistor except that the polarity of the reverse voltage is reversed and the deflection of the trace will be upward. Of course, switches *S2*, *S3*, and *S4* are simultaneously flipped to the *NPN* position.

While the vertical deflection of the scope's beam is a function of the voltage drop across *R5*, the extent of this voltage drop depends upon the current through *R5*, the collector-to-base of *Q1* and the transistor under test. If the vertical input of the scope is calibrated for 1 volt per inch, a 1-inch high trace represents 100 $\mu$A of current (100 $\mu$A × 10,000 $\Omega$ = 1 volt).

The tilt on the left side of the trace (Fig. 2) shows emitter-to-base reverse

(*Continued on page* 140)

# TRANSISTOR/DIODE TESTER

(*Continued from page* 122)

current while the tilt on the right side shows collector-to-base reverse current. In this idealized trace, reverse current becomes evident at about −60 to −70 volts, and increases gradually until the breakdown voltage point is reached. The breakdown point is also commonly referred to as the zener point.

(Note that the 0 to −50 volts per inch along the horizontal scale represents the inverse voltage across the transistor under test when the scope's horizontal input sensitivity (through the test circuit) is calibrated at 50 volts per inch. The voltage across the horizontal input has a linear relationship and is in step with the inverse voltage applied to the test transistor.)

**Construction.** Parts placement and layout is not critical. In Fig. 3, the test circuit is shown breadboarded on an 8½″ x 6″ piece of ¾″ plywood. The front panel is an 8½" x 4½" piece of 16-gauge aluminum. More compact construction can be obtained by using a 6" x 5" x 4" aluminum utility box. Ground only those points shown in the schematic (Fig. 1). Use spaghetti to insulate transistor *Q1*'s leads.

A 2N398A transistor was chosen for *Q1* because of its high collector-to-base reverse breakdown voltage rating. The transistor used in the project is rated at −105 volts, but actually checked out at −150 volts.

Although individual switches are used for *S2*, *S3* and *S4*, you can substitute a suitable two-position rotary switch or stacked slide switch. The binding posts for the test transistor's connections and for the connections to the oscilloscope can be of any design. You may find it more convenient to add another ground post, or eliminate the terminals altogether and connect the leads that go to the scope directly to the circuit.

All parts used in the tester are standard. If you have any difficulty in locating a 110,000-ohm, 4-watt resistor for *R2*, you can connect two 220,000-ohm, 2-watt resistors in parallel.

**Zener Diode Test.** The curve shown for the zener diode (Fig. 4) can be obtained by connecting a jumper between the emitter and collector terminals (*E* and *C*) of the test circuit, and connecting the zener diode between one of these terminals and the base terminal (*B*). The cathode lead of the diode goes to ground, and the switches are in the *PNP* position. If you reverse the diode's connections, and flip the switches over to the *NPN* position, the trace will go upward instead of downward. The test can be made either way.

If you do not use the jumper and connect only one side of the diode either to the emitter or the collector terminal, the left half or the right half of the trace will be obtained. Both halves of the trace contain the same information.

**Neon Lamp Test.** If a good neon lamp is connected between the base and collector test points, the curve shown in Fig. 5 will be displayed. Reading this curve is more or less self-explanatory. Here *S2*, *S3*, and *S4* were set to the *PNP* position.

The accuracy of the test readings de-

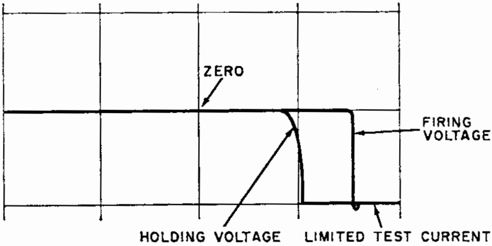

Fig. 5. Firing and holding voltage of a neon lamp can be predicted. If the scope's horizontal sweep is calibrated at 50 volts per inch, the neon lamp depicted here ignites at about 75 volts and stays lit until the potential drops to about 50 volts.

pends upon how accurately you calibrate the oscilloscope. Once the oscilloscope is correctly calibrated, no further scope adjustments are required.

**Scope Calibration.** To adjust vertical sensitivity, apply a 1-volt peak-to-peak a.c. signal directly to the scope's vertical input, and adjust the vertical gain for a 1″-high pattern. This is all there is to the vertical calibration for a deflection of 100 microamperes per inch.

Horizontal sensitivity can be calibrated by applying a 5-volt peak-to-peak a.c. signal directly to the horizontal input terminals and adjusting the horizontal gain for a 1″-long trace. Because of the 10-to-1 voltage divider network in the test circuit, actual horizontal sensitivity will be 50 volts per inch.

# Automatic Diode Checker

### *Makes a complete check in 1/60th of a second.*

BY R. M. STITT

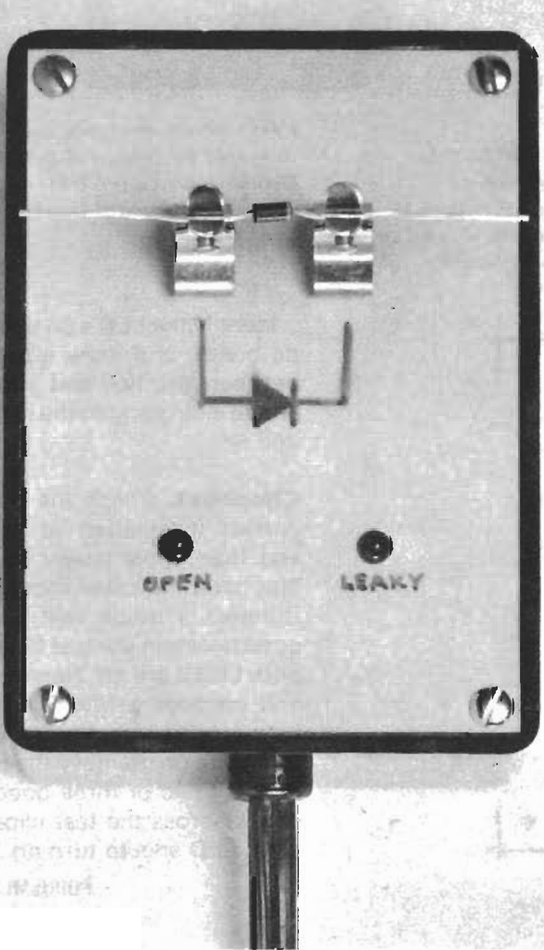

MOST EXPERIMENTERS think that using an ohmmeter is the best way to test a semiconductor diode. However, some ohmmeters supply too much current to the device, causing an "open" where one does not really exist. Other meters indicate values of forward and reverse resistance, which hopefully give an indication of the diode's condition.

In the Automatic Diode Checker described here, the diode is tested in the forward-bias condition for excessive voltage drop and then in the reverse condition for excessive leakage current. Each test is made during one half of the power-line frequency, and the results are displayed simultaneously on two LED's labeled OPEN and LEAKY. The LED marked OPEN is illuminated when there is excessive voltage drop. The other is lit when there is excessive reverse leakage. If the diode fails both tests, both LED's are on. With no diode in the clips, the OPEN indicator is on.

When a good diode is inserted in the test clips (correctly oriented), both LED's should be off. There will be no damage to either the diode being tested or the diode tester if the diode is inserted the wrong way; but both LED's will glow.

The peak reverse voltage is less than 18 volts and the peak forward current is less than 4 mA. With the values shown in Fig. 1, OPEN indicates a forward voltage drop in excess of 1.3 volts at 3 mA; and LEAKY indicates a reverse leakage current of about 0.05 mA at 16 volts.

**How It Works.** On one half cycle of the ac supply, the OPEN circuit is active (*D1, D2, D3, R2, R3, Q1* and *LED1*). In this half cycle the upper ac line is positive. (*D4* and *D5* are reverse-biased to isolate the other part of the circuit.) Current, limited by *R2*, flows through *D1* and the diode being tested. The voltage across the test diode is applied through *D3* to the base of *Q1*. If this voltage exceeds 1.3 V, *Q1* turns on and sinks current through *LED1*, indicating high forward drop.

When the ac supply reverses, the lower part of Fig. 1 is active, with *D1* and *D2* reverse-biased to shut out the OPEN part of the circuit. Any reverse leakage current through the test diode flows through *R1*, creating a potential across it. This voltage is applied to the base of *Q2* through *R7* and *D5*. When this voltage exceeds about 2 volts, *Q2* is energized, turning on *Q3* and *LED2*.

Since the circuit uses a conven-

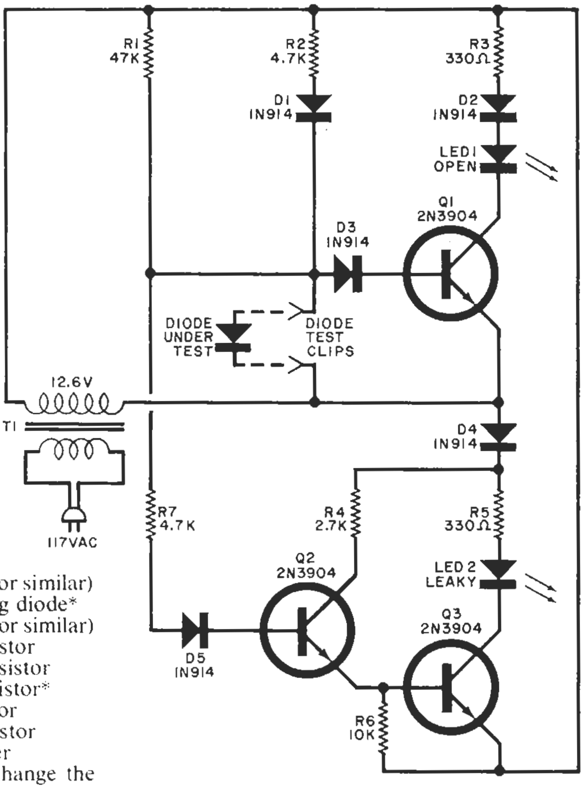

*Fig. 1. The "open" circuit operates when upper ac line is positive. "Leaky" circuit operates when this line is negative. Both circuits test diode at line frequency.*

### PARTS LIST

D1 to D5—Silicon diode (1N914 or similar)
LED1,LED2—Red light emitting diode*
Q1,Q2,Q3—Transistor (2N3904 or similar)
R1—47,000-ohm, ¼-W, 5% resistor
R2,R7—4700-ohm, ¼-W, 5% resistor
R3,R5—330-ohm, ¼-W, 5% resistor*
R4—2700-ohm, ¼-W, 5% resistor
R6—10,000-ohm, ¼-W, 5% resistor
T1—12.6-V, 100-mA transformer
*R3 and R5 can be varied to change the brightness of the LED's.
Misc.—Diode test clips, plastic case (Harry Davis #220 or similar), line cord, grommet, mounting hardware, etc.

Note: A complete kit of parts is available from: Atlantis, Box 12654, Tucson, AZ 85711, for $19.95.

tional 12-volt transformer, no dc supply is required and all switching is performed automatically at 60 Hz.

**Construction.** Although circuit layout is not critical and any type of construction can be used, a unique approach was used in the author's prototype as shown in the photographs. The pc board foil pattern shown in Fig. 2 can be used to make a board which has the components mounted on one side with the other side serving as the cover for the plastic case. The component holes are drilled only half-way into the board. The only holes drilled all the way through the board are those for mounting the LED's and the diode test clips. The other components are mounted by bending and cutting their leads so that they just fit on their pads. Solder must be applied quickly and properly to insure a good mechanical hold.

Transformer *T1* can be attached to the bottom of the plastic case, with plastic foam insulation between the transformer and the components on the board. Use a grommet on the hole for the line cord in the side of the case.

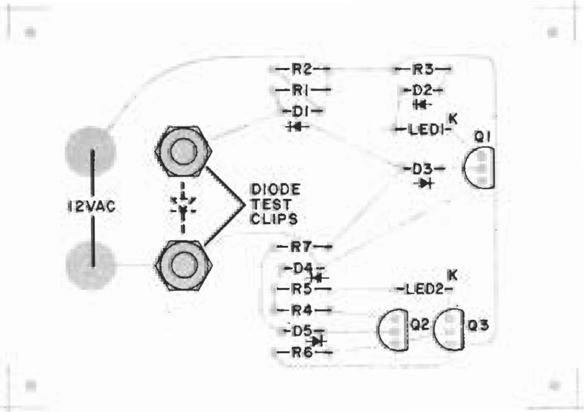

*Fig. 2. Pc board can be used as case cover with component mounting as shown at left.*

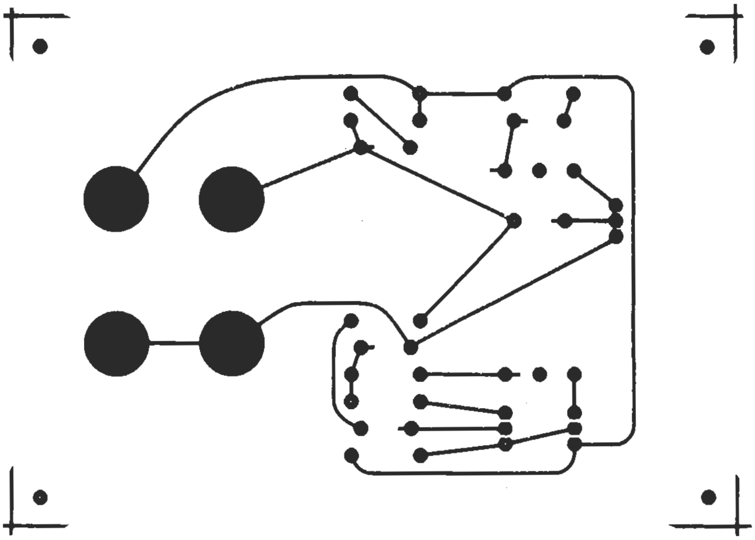

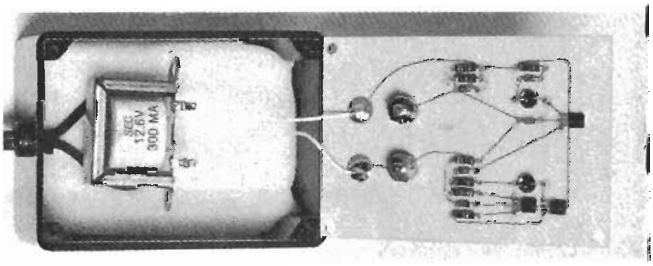

*Photo shows how components are mounted on pc board with the transformer in the bottom of the case with foam insulation.*

Identify the LED's on the front of the pc board, and draw a diode symbol between the two test clips with the anode side going to the junction of *D1* and *R1*.

**Checkout.** Check the pc board for correct installation of components, and then apply power to the tester. The OPEN indicator should come on. Connect a diode that you know is good between the test clips. Note that both LED's are off. Remove the diode and connect a 100,000-ohm resistor between the test clips. Note that both LED's are on. Remove the resistor and connect two or three good diodes in series across the test clips. Only the OPEN LED should turn on. ◆

# Tech Tips

**Tech-Tips is an ideas forum and is not aimed at the beginner. ETI is prepared to consider circuits or ideas submitted by readers for this page. All items used will be paid for. Drawings should be as clear as possible and the text should preferably be typed. Circuits must not be subject to copyright. Items for consideration should be sent to ETI TECH-TIPS, Electronics Today International, Unit 6, 25 Overlea Blvd., Toronto, Ontario, M4H 1B1.**

## Transistor Tester

G. Smith

This transistor tester works by injecting a known current into the base of the transistor under test, and measuring the collector current. The values of R1, R2 and R3 give a base current of 10, 4 and 1uA which gives a FSD on the meter for transistors with a gain of 100, 250, and 1000 respectively. Since the gain of the transistor is proportional to its gain, the gain can be easily deduced from the reading on the meter. Leakage current is measured by leaving the base open circuit.

SW2 reverses the polarity of the battery and the meter to allow the testing of both NPN and PNP transistors. R4 and RV1 protect the meter from excessive currents, and do not affect the reading on the meter. RV1 should be adjusted so that the meter needle just touches the end stop when the collector and emitter terminals are connected together.

A simple transistor socket can be made by mounting three crocodile clips as shown in the diagram.

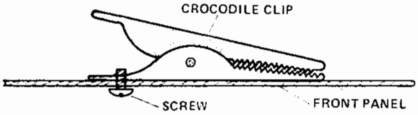

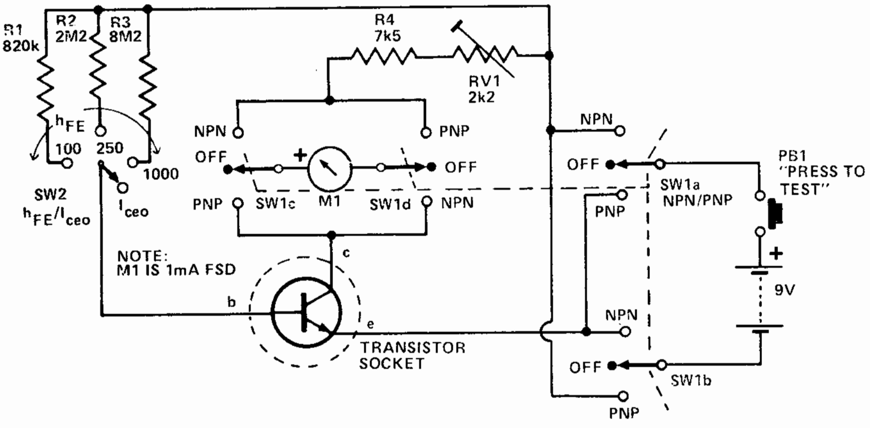

## NPN-PNP Indicator

F Read

The first 2 inverters IC1a and IC1b form a multivibrator running at approximately 2 kHz. The next two inverters buffer the multivibrator outputs, which then go to the collector and emitter of the transistor under test.

The signal applied to the base of the transistor is always in phase with the collector so the transistor, whether PNP or NPN, will always be turned fully on every half cycle.

When an NPN transistor is being tested the collector will always be near OV and when a PNP transistor is being tested the emitter will always be near OV.

The last two inverters detect which terminal is held at OV and drive the appropriate LED via the current limiting resistors R4 and R5.

The six inverters needed are all contained in a single IC package - the SN7404.

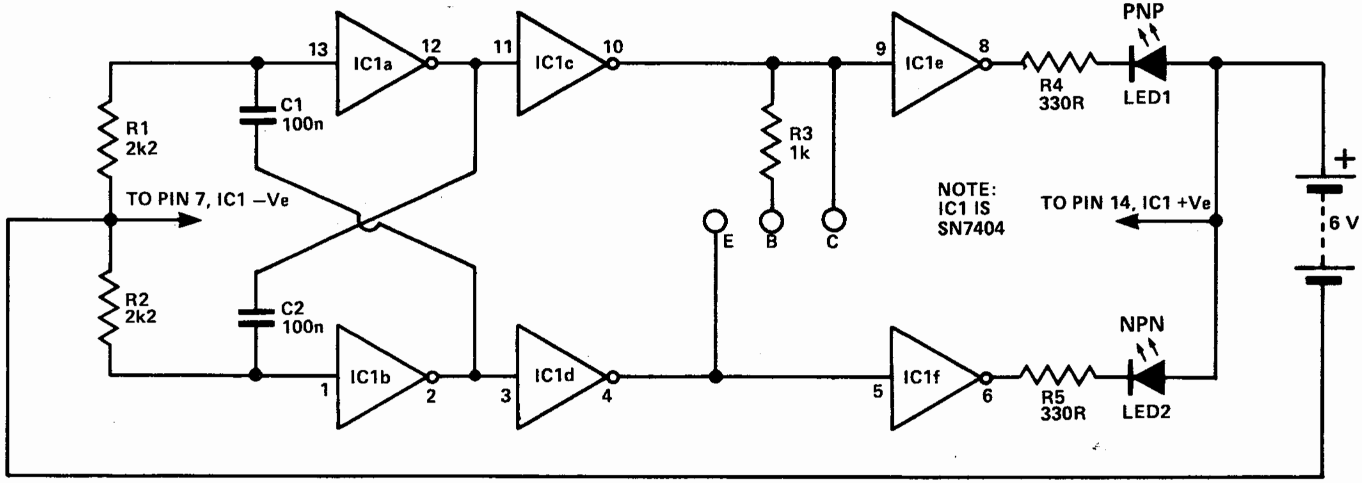

# Circuit Ideas

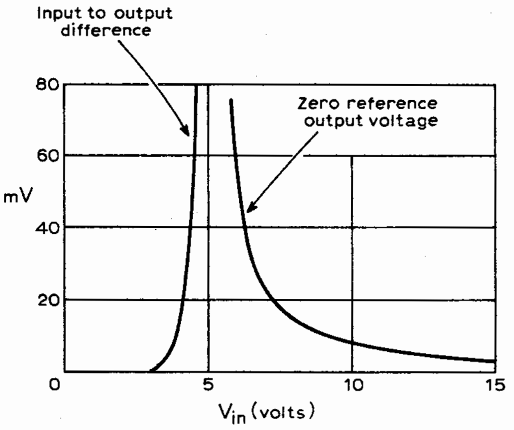

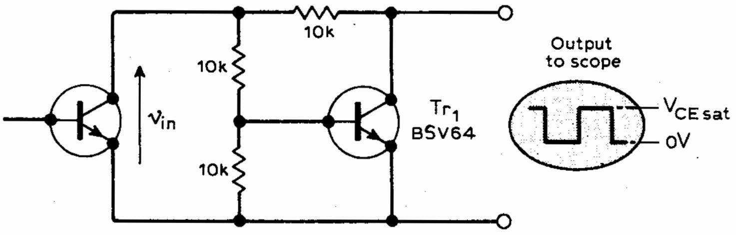

## Measuring $VCE_{SAT}$ in power transistors

To determine the saturation loss in power transistors it is necessary to measure the saturation voltage, which may be about 1 to 2V. The measuring circuit must also accommodate the high collector voltage which is present when the switching transistor is in the off state. A problem therefore arises if a d.c. coupled oscilloscope is used as it is often difficult to obtain adequate voltage resolution without overloading the deflection amplifier during the off state of the transistor. Furthermore, a very small disparity between a.c. and d.c. gain in the deflection channel can lead to a substantial error in the apparent saturation voltage.

The circuit shown is inserted between the switching transistor and an oscilloscope which may then be a.c. coupled. Output to the oscilloscope is a rectangular waveform with a low voltage state representing 0V and the high voltage state being the transistor saturation voltage. Errors in the circuit are typically less than 10mV, and may be established by d.c. measurements if desired. Accurate measurements of saturation voltage may be made simply by reading the peak to peak voltage of the displayed waveform. When the collector voltage of the power switch is below 4V, Tr$_1$ is non-conducting. During the off state of the switch, its collector voltage is assumed to be greater than 10V in which case Tr$_1$ is heavily saturated and the zero reference output is typically less than 10mV. Note that Tr$_1$ is a large-chip transistor operating at low collector current. The same technique may be used to drive an integrating wattmeter which, by sampling collector current, will show saturation power loss directly.

D. R. Boit,
Charlwood,
Surrey.

---

# Out of Tune

In "Build an In-Circuit Transistor Tester for $10," p. 54, July 1979, there is an omission in the schematic diagram (Fig. 1). The RESET input of *IC2*, a 4027 CMOS flip-flop, must be connected to $V_{SS}$ if the circuit is to operate properly. This can be accomplished by connecting pin 12 to pins 3 through 9.

***POPULAR ELECTRONICS***

# CURVE TRACER

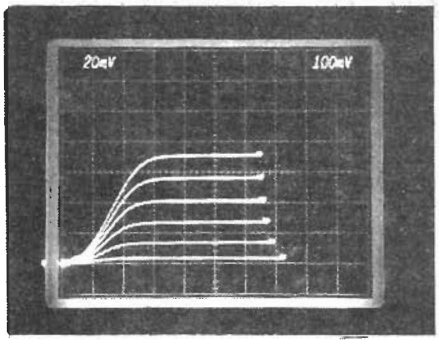

### Display the dynamic characteristics of a variety of semi conductor devices with out curve tracer. Design by J. H. Adams.

THE CURVES INVOLVED in this design are not unfortunately those of the Bardots and Welchs of this world but curves that, to some, are just as interesting. The design will allow the dynamic voltage-current characteristics of diodes and transistors to be displayed on the screen of a DC 'scope capable of taking an external X input.

The performance of the unit will not be up to that of a commercial machine but considering such commercial designs are priced in the thousand pound range while our design could be built for around five pounds, we're not doing too badly.

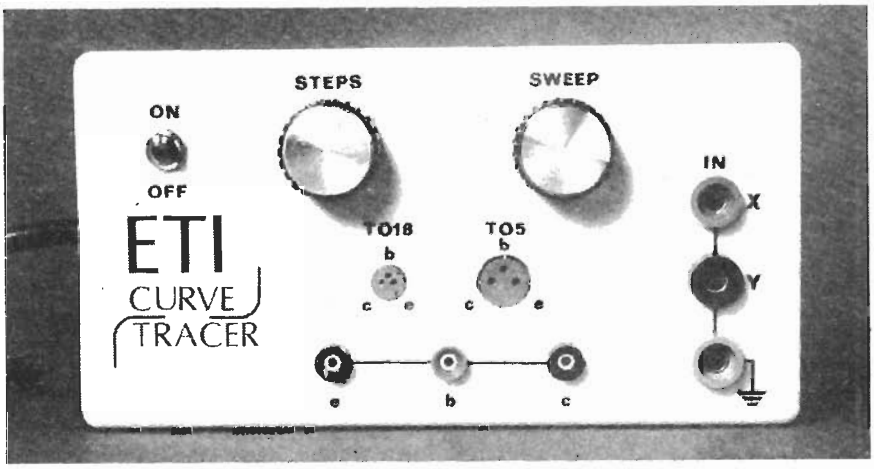

View of the internal layout of the prototype version

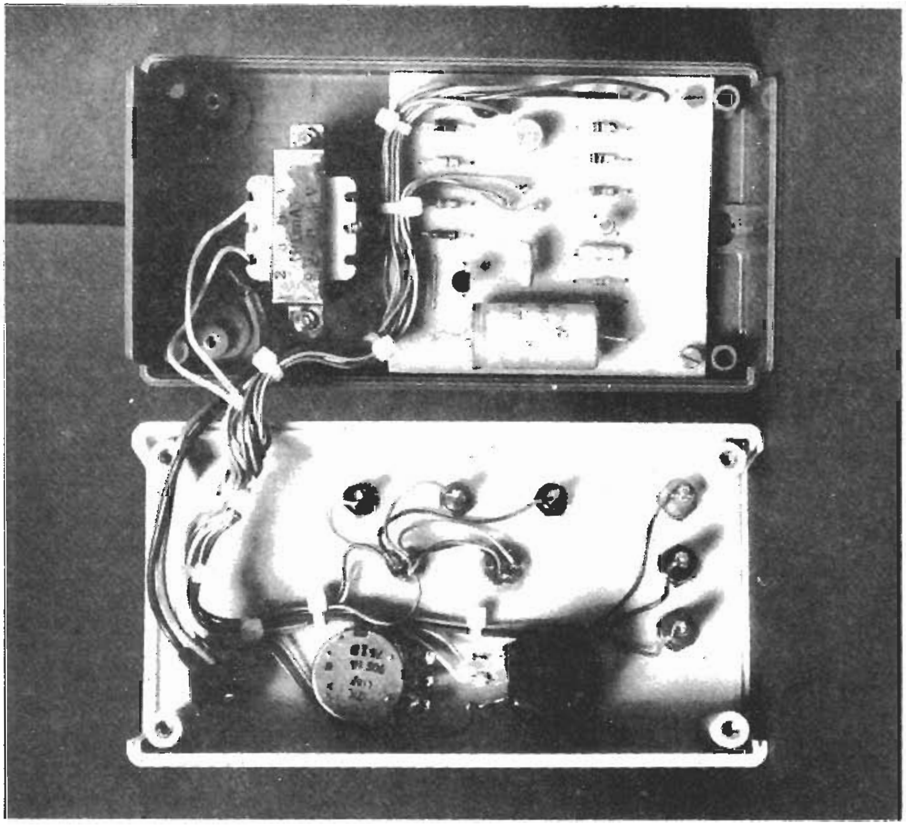

Construction of the curve tracer is straightforward. Mount all the components on the PCB according to the overlay. The interal layout of our prototype is shown in the photographs. The unit is mains powered and a battery supply is not suitable for this circuit.

Initially try the curve tracer with a high gain nrn transistor, a BC108 will be ideal. Connect it to one of the tracer's sockets and connect the unit to the 'scope. Set the Y gain on the 'scope at maximum and set up the maximum required level of collector voltage by adjusting RV1. RV2 will control the number of steps displayed on the screen. The X sensitivity of the 'scope should be 1V per division.

The performance of the unit is degraded by the slight drop in the DC potential on C1 during the 10mS sweep and the slight effect of the 100R sampling resistor, in that its volt drop is included in the observed collector potential. However as stated above the unit will give a good indication of the dynamic performance of a wide range of semiconductor devices (as the photograph shows) at a price that is a fraction of similar commercial equipment.

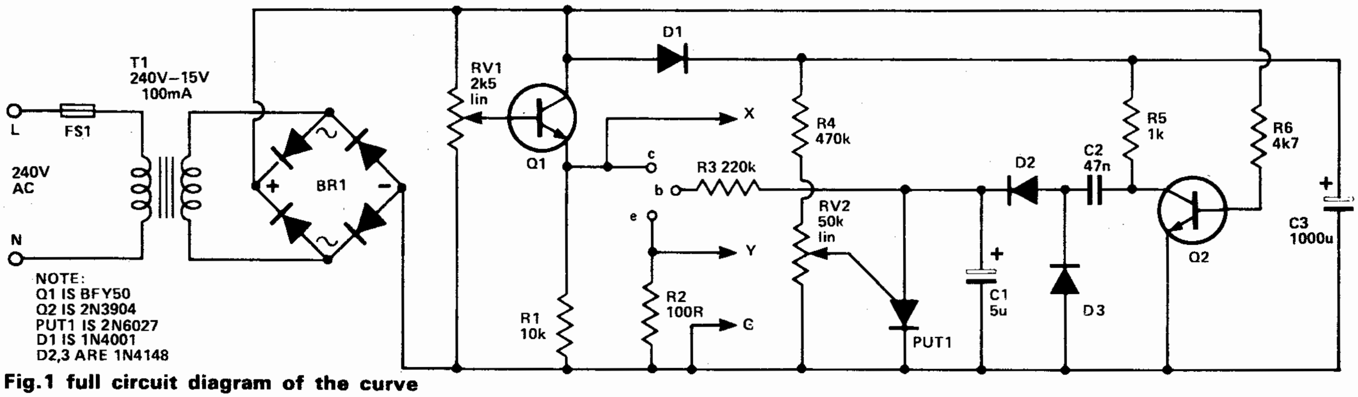

NOTE:
Q1 IS BFY50
Q2 IS 2N3904
PUT1 IS 2N6027
D1 IS 1N4001
D2,3 ARE 1N4148

**Fig.1 full circuit diagram of the curve tracer.**

# HOW IT WORKS

The principles of the full circuit can perhaps be best explained by consideration of a simpler form of the circuit. Figs. 2 and 3 show circuits for investigating the dynamic characteristics of a diode and transistor (at fixed base current) respectively.

The 'diode circuit' will, unless an inverter is available, produce a trace that will appear upside down.

Operation of this circuit is quite straight forward. RV1 allows the peak value of the AC supply to be adjusted. This is then applied to the device under test via a current limiting resistor as well as to the X input of the 'scope. The current flow in the device at any time is proportional to the voltage developed across a low value sampling resistor in the current path. This voltage is fed to the Y input of the scope.

The simple transistor tester functions in much the same way. RV1 allows the base current to be adjusted within the range 10aA to 100aA.

The characteristics of an N-Channel FET (2N3819) may also be examined with this basic building block. The output characteristics are displayed for a gate voltage selected by RV1. Transfer characteristics (gate voltage vs. Drain Current) may be shown by transferring lead X to the gate terminal and mining the 1000μF capacitor to the 15V supply (observing the change in polarity).

Moving now to the full circuit of Fig 1 that allows a far more informative display providing, as it does, simultaneous displays of the characteristic curves for several equally spaced values of base current.

The circuit operates as follows. Every 10 ms the collector supply swings up and back over a half cycle of the full-wave rectified supply. At the end of each half cycle, there is a short period during which the supply potential is below about 0.6 V, and during this time, Q3 turns off, sending a pulse from its collector into the charge store C1 C2 D3 D2. Each pulse increases the potential in C1 by approximately 0.2 V. This would go on until the potential on C1 was 20 V were it not for Q2, the little known and much mis-described programmable unijunction transistor, PUT. This device is the semiconductor version of a neon lamp, insulating up to a certain p.d. and conductiong heavily at potentials above this breakdown value, but with the added advantage in that, through a third terminal, this breakdown potential is programmable over quite a wide range. Varying this control potential through the setting of VR2 sets the number of steps that will occur before the potential on C1 is great enough to make Q2 fire, reducing the capacitor's potential to approximately 0.6 V and so re-starting the sweep sequence.

The tracer can hardly be expected to match all the performance of a commercial curve tracer, the prices of which range into thousands of pounds. There are errors, due to the slight droop in d.c. potential on C1, and hence in base current, during the 10ms sweep, and due to the slight effect of the 100R sampling resistor, in that its volt drop is included in the observed collector potential, but as can be seen, these are quite insignificant as regards the final display. The only problem which may arise is the appearance of Radio 4 on the current axis (seen as a thickening of the trace). This is easily cured by placing a 10n disc capacitor across the actual Y-inputs of the oscilloscope.

A suitable transistor for the device under test is any reasonably high gain npn transistor, e.g. BC108. VR1 controls the maximum collector voltage, whilst VR2 sets the number of sweeps displayed. With the values given, the difference in base current between one step and the next is approximately given by:

$\frac{1}{5R}$ μA, where $R$ is in megohms.

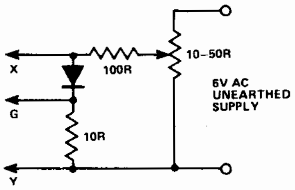

**Fig.2 simple diode tester**

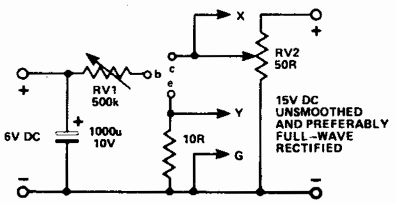

**Fig.3 fixed current transistor tester**

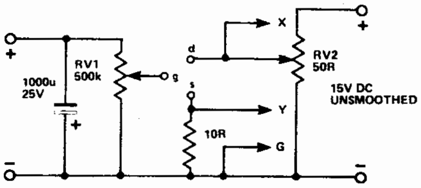

**Fig.4 circuit for investigating FET transfer characteristics.**

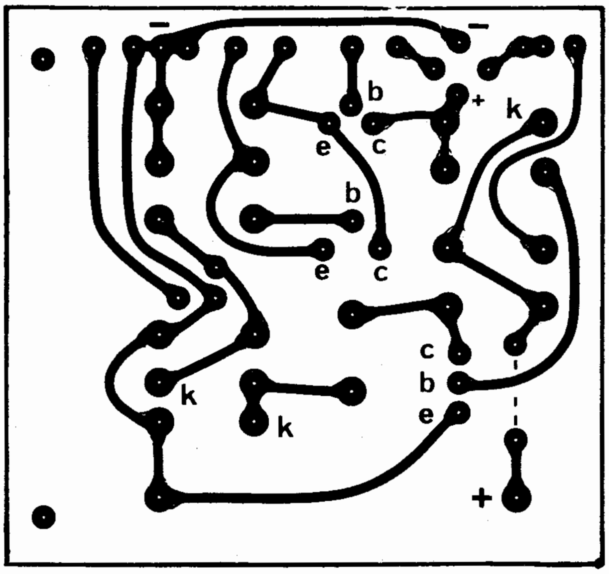

## PARTS LIST

| RESISTORS | |
|---|---|
| R1 | 10k |
| R2 | 100R |
| R3 | 220k |
| R4 | 470k |
| R5 | 1k0 |
| R6 | 4k7 |
| **CAPACITORS** | |
| C1 | 5u0 25 V electrolytic |
| C2 | 47n polyester |
| C3 | 1 000 25 V electrolytic |
| **SEMICONDUCTORS** | |
| Q1 | BFY50 |
| Q2 | 2N3904 |
| PUT1 | 2N6027 |
| D1 | 1N4001 |
| D2,3 | 1N4148 |
| BR1 | 0.9A 400V |
| **POTENTIOMETERS** | |
| RV1 | 2k5 1in |
| RV2 | 50k 1in |

MISCELLANEOUS
PCB as pattern, case to suit, sockets, knobs, cable, etc.

## BUYLINES

The components used in this project should in the main, be generally available — the only component likely to cause problems is the PUT, but this should be available from the larger mail order outlets.

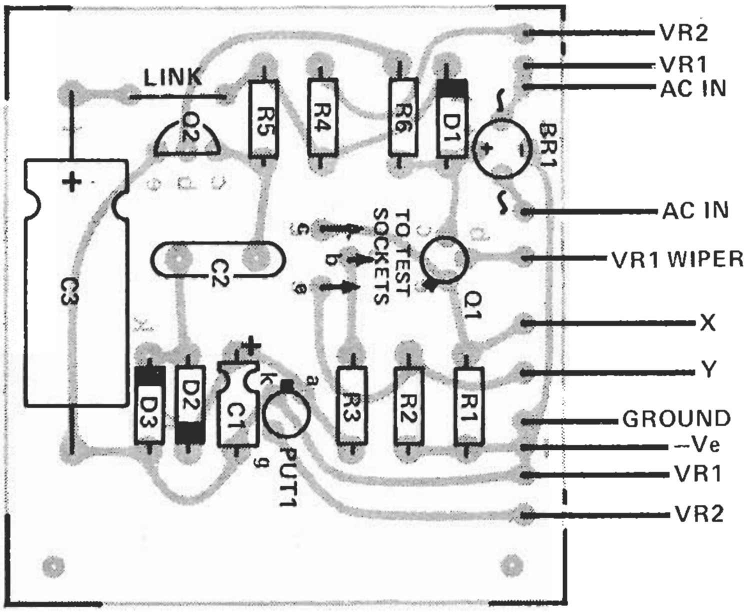

| 7400 TTL | |
|---|---|
| 7400 | .10 |
| 7401 | .12 |
| 7402 | .12 |
| 7403 | .12 |
| 7404 | .10 |
| 7406 | .27 |
| 7408 | .12 |
| 7409 | .13 |
| 7410 | .12 |
| 7411 | .21 |
| 7412 | .21 |
| 7413 | .24 |
| 7471 | .64 |
| 7416 | .26 |
| 7417 | .33 |
| 7420 | .12 |
| 7426 | .24 |
| 7427 | .24 |
| 7430 | .12 |
| 7432 | .23 |
| 7433 | .50 |
| 7437 | .23 |
| 7438 | .23 |
| 7440 | .16 |
| 7441 | .50 |
| 7442 | .38 |
| 7443 | .85 |
| 7445 | .67 |
| 7446 | .87 |
| 7447 | .59 |
| 7448 | .48 |
| 7450 | .16 |
| 7451 | .16 |
| 7453 | .16 |
| 7454 | .16 |
| 7460 | .16 |
| 7470 | .36 |
| 7472 | .32 |
| 7473 | .21 |
| 7474 | .26 |
| 7475 | .29 |
| 7476 | .31 |
| 7483 | .68 |
| 7485 | .84 |
| 7486 | .25 |
| 7489 | 1.95 |
| 7490 | .38 |
| 7491 | .62 |
| 7482 | .42 |
| 7493 | .29 |
| 7495 | .51 |
| 7496 | .67 |
| 74104 | .48 |
| 74105 | .48 |
| 74107 | .27 |
| 74109 | .45 |
| 74121 | .29 |
| 74122 | .47 |
| 74123 | .38 |
| 74141 | .71 |
| 74151 | .58 |
| 74154 | 1.00 |
| 74156 | .60 |
| 74157 | .54 |
| 74160 | 1.04 |
| 74162 | .80 |
| 74163 | 1.18 |
| 74164 | .87 |
| 74165 | .93 |
| 74175 | .67 |
| 74176 | .84 |
| 74180 | .86 |
| 74190 | 1.04 |
| 74192 | .98 |
| 74193 | .98 |
| 74194 | .86 |
| 74196 | .86 |
| 74197 | .86 |
| 74198 | 1.41 |
| **74 LS TTl** | |
| 74LS00 | .18 |
| 74LS01 | .18 |
| 74LS02 | .18 |
| 74LS04 | .18 |
| 74LS05 | .21 |
| 74LS08 | .21 |
| 74LS09 | .21 |
| 74LS10 | .21 |
| 74LS11 | .21 |
| 74LS14 | 1.10 |
| 74LS20 | .18 |
| 74LS21 | .21 |
| 74LS32 | .24 |
| 74LS37 | .26 |
| 74LS38 | .29 |
| 74LS40 | .25 |
| 74LS42 | .54 |
| 74LS51 | .29 |
| 74LS74 | .32 |
| 74LS86 | .33 |
| 74LS90 | .86 |
| 74LS93 | .86 |
| 74LS107 | .34 |
| 74LS112 | 1.00 |
| 74LS123 | .85 |
| 74LS124 | 2.20 |
| 74LS151 | .95 |
| 74LS153 | .64 |
| 74LS157 | .64 |
| 74LS164 | 1.14 |
| 74LS175 | .1.05 |
| 74LS193 | .1.33 |
| 74LS194 | 2.06 |
| **74S TTL** | |
| 74S00 | .36 |
| 74S04 | .26 |
| 74S05 | .38 |
| 74S08 | .38 |
| 74S10 | .38 |
| 74S11 | .38 |
| 74S22 | .38 |
| 74L37 | .38 |
| 74S51 | .26 |
| 74S64 | .20 |
| 74S74 | .38 |
| 74S112 | .66 |
| 74S124 | 3.25 |
| **MICRO's MEMORIES** | |
| 74S186 | 2.40 |
| 1702A | 3.99 |
| 2706 | 7.96 |
| 2102-1 | 1.22 |
| 2114 | 10.53 |
| 8080A | 7.02 |
| 8251 | 7.06 |
| **LINEAR** | |
| LM388-14 | .80 |
| LM3900 | .48 |
| LM741-8 | .21 |
| NE555 | .29 |
| NE556 | .71 |
| NE565 | 1.14 |
| NE506 | 1.43 |
| NE567 | 1.62 |
| **REGULATORS** | |
| 7805 | .80 |
| 7812 | .80 |
| 7905 | 1.39 |
| 7912 | 1.39 |
| LM309 | .86 |
| LM723 | .38 |
| **TRANSISTORS** | |
| AC128 | .23 |
| AC176 | .23 |
| BC107 | .10 |
| BC108 | .10 |
| BC109 | .10 |
| BC177 | .18 |
| BC178 | .18 |
| BC179 | .18 |
| BC184 | .15 |
| BC187 | .32 |
| BC477 | .24 |
| BC478 | .24 |
| BC479 | .24 |
| BD131 | .54 |
| BD132 | .54 |
| BFY50 | .23 |
| BFY51 | .23 |
| BFY52 | .23 |
| BSY95A | .17 |
| OC71 | .20 |
| OC72 | .36 |
| OC200 | .45 |
| TIP 2955 | .85 |
| TIP 3055 | .68 |
| TIS43 | .33 |
| ZTX300 | .17 |
| ZTX500 | .18 |
| 2N3053 | .20 |
| 2N2054 | .57 |
| 2N3055 | .57 |
| 2N3702 | .12 |
| 2N3704 | .12 |
| 2N3819 | .29 |
| **DIODES** | |
| BAX13 | .05 |
| 1N914 | .05 |
| 1N4148 | .05 |
| 1N4151 | .04 |
| 1N4001 | .06 |
| 1N4002 | .08 |
| 1N4003 | .08 |
| 1N4004 | .10 |
| 1N4005 | .11 |
| 1N4005 | .11 |
| 1N4007 | .12 |
| 1N4500 | .16 |
| 1N4504 | .21 |
| **ELECTROLYTICS UF/V** | |
| .47/100 | .08 |
| 1/63 | .08 |
| 2.2/63 | .08 |
| 3.3/63 | .08 |
| 4.7/35 | .08 |
| 4.7/63 | .08 |
| 10/16 | .08 |
| 10/35 | .08 |
| 10/63 | .09 |
| 22/16 | .08 |
| 22/35 | .10 |
| 22/63 | .12 |
| 33/16 | .08 |
| 33/35 | .11 |
| 33/63 | .13 |
| 47/16 | .09 |
| 47/35 | .12 |
| 47/63 | .15 |
| 100/16 | .11 |
| 100/35 | .13 |
| 100/63 | .24 |
| 220/16 | .12 |
| 220/25 | .17 |
| 330/16 | .18 |
| 330/35 | .31 |
| 470/6V3 | .14 |
| 470/16 | .18 |
| 470/35 | .38 |
| 1000/16 | .30 |
| 1000/25 | .48 |
| 2200/16 | .54 |

BURROUGHS 9 Dig. 7 Seg. Panaplex Display. 0.25" Neon Type with Red Bezel and Socket. £2.25

All prices INCLUDE V.A.T. add 25p P&P.

IBEK SYSTEMS,
32 Dunsville Drive, Coventry CV2 2H5

THE SINCLAIR PDM35
digital Multimeter

Now a digital multimeter at an analogue price and look at the spec!
**D.C. VOLTS** 1mv-1000v(1% — 1 count) 10mΩ input.
**A.C. VOLTS** 1v-500v. 40Hz-5kHz (1%+2 counts).
**D.C. CURRENT** 1 inA-200mA (1% count).
**RESISTANCE** 1Ω-20mΩ (1.5%+1 count).

**£29.80** cash with order or £30.95 company purchase order.
Adaptor £3.20. Padded case £3.20. 30kV probe £18.64

THE SINCLAIR MICROVISION

The amazing pocket T.V. that will pick up programs throughout the world, complete with rechargeable batteries.

**£189.95** inc. VAT

See (for detailed Brochure ex-stock)

SINCLAIR DM235

Portable 3½ digit 6 function Multimeter.
DC volts 1mV to 1000V
AC volts 1mV to 750V
AC & DC current 1μA to 1A
Resistance 1Ω to 20mΩ
Diode test 0 1μA to 1 mA
10mΩ input. DC acc. 1.0% AC acc 1 5% 30Hz-10KHz

Cash with order **£52.80** inc VAT or £53 70 on company purchase order

PORTABLE ALARM CLOCK

Only **£18.20** inc. P&P

- Battery operated
- Quartz crystal accuracy
- Back light
- Simple to set
- Electric Alarm
- Snooze button
- Colour Brown

**CA-08AL**
Case £8 95 Adaptor £3 75

We accept govt / company purchase orders on all goods

KRAMER & CO

**We will match any lower advertised price on a cash with order basis if competitor has goods in stock**
**9 October Place, Holders Hill Road, London NW14 1EJ**
**Telex 888941 Attn. Kramer K7. Tel. 01-203 2473**
Mail order only. SAE for data sheets Export enquiries welcome

**ETCH RESIST TRANSFER KIT SIZE 1:1**
Complete kit 13 sheets 6in x 4½in **£2.50** with all symbols for direct application to P.C. board. Individual sheets 25p each. (1) Mixed Symbols (2) Lines 0.05 (3) Pads (4) Fish Plates and Connectors (5) 4 Lead and 3 Lead and Pads (6) DILS (7) BENDS 90 and 130 (8) 8—10—12 T.O.5. Cans (9) Edge Connectors 0.15 (10) Edge Connectors 0.1 (11) Lines 0.02 (12) Bends 0.02 (13) Quad in Line.

**FRONT AND REAR PANEL TRANSFER SIGNS**
All standard symbols and wording. Over 250 symbols, signs and words. Also available in reverse for perspex, etc. Choice of colours, red, blue, black, or white. Size of sheet 12in x 9in. Price **£1.**

**GRAPHIC TRANSFERS WITH SPACER ACCESSORIES**
Available also in reverse lettering, colours red, blue, black or white. Each sheet 12in. x 9in contains capitals, lower case and numerals ⅛in kit or ¼in kit. **£1** complete. State size.

**All orders dispatched promptly.**
**All post and VAT paid**
Ex U.K. add 50p for air mail
Shop and Trade enquiries welcome
Special Transfers made to order

**E. R. NICHOLLS**
**P.C.B. TRANSFERS**
**Dept. HE/1**
**46 LOWFIELD ROAD**
**STOCKPORT, CHES.061-480 2179**

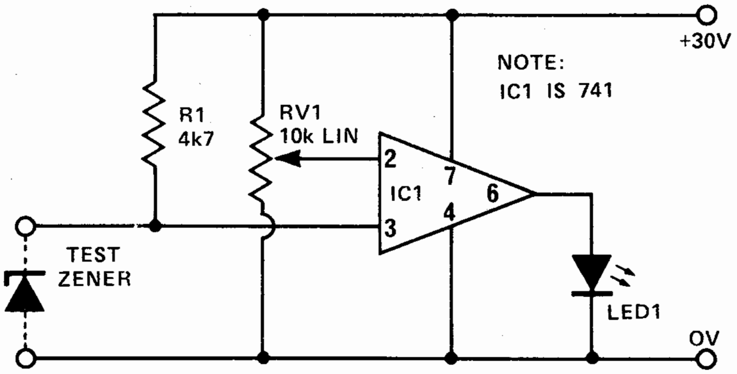

## Zener Tester

M Ibions

This circuit is to provide a cheap and reliable method of testing zener diodes.

RV1 can be calibrated in volts, so that when LED 1 just lights, the voltage on pins 2 & 3 are nearly equal. Hence the zener voltage can be read directly from the setting of RV1.

The supply need only be as high a value as the zener itself. For a more accurate measurement, a precision pot could be added and calibrated.

---

# tech tips

## Readers' Circuits

### Transistor Tester

G. Smith

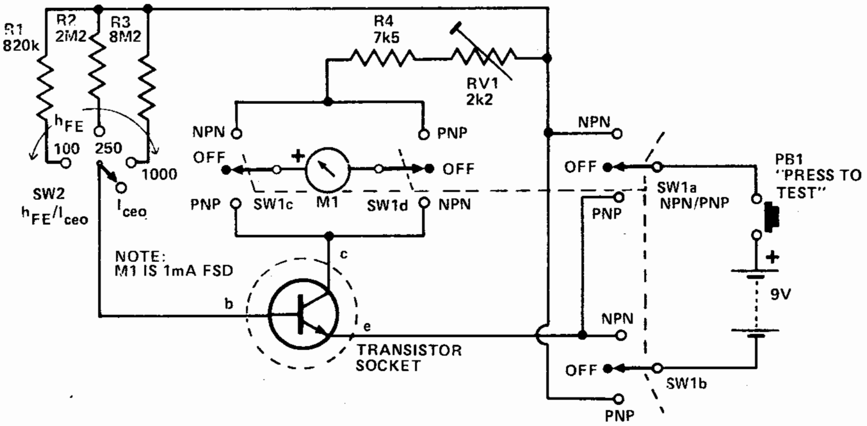

This transistor tester works by injecting a known current into the base of the transistor under test, and measuring the collector current. The values of R1, R2 and R3 give a base current of 10, 4 and 1uA which gives a FSD on the meter for transistors with a gain of 100, 250, and 1000 respectively. Since the gain of the transistor is proportional to its gain, the gain can be easily deduced from the reading on the meter. Leakage current is measured by leaving the base open circuit.

SW2 reverses the polarity of the battery and the meter to allow the testing of both NPN and PNP transistors. R4 and RV1 protect the meter from excessive currents, and do not affect the reading on the meter. RV1 should be adjusted so that the meter needle just touches the end stop when the collector and emitter terminals are connected together.

A simple transistor socket can be made by mounting three crocodile clips as shown in the diagram.

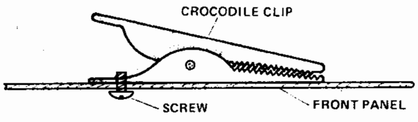

# C-MOS tester checks for assembly errors

by Joseph G. Gaskill
*Solid State Scientific Inc., Montgomeryville, Pa.*

Detecting most faults in complementary-metal-oxide-semiconductor devices due to errors in packaging or because of burnout while in actual operation, this tester can check virtually all the elements in the present C-MOS logic family. The unit needs only to perform a set of simple open and short tests at each pin of the device to quickly check for chip failures.

Assembly-related rejects and in-circuit failures are

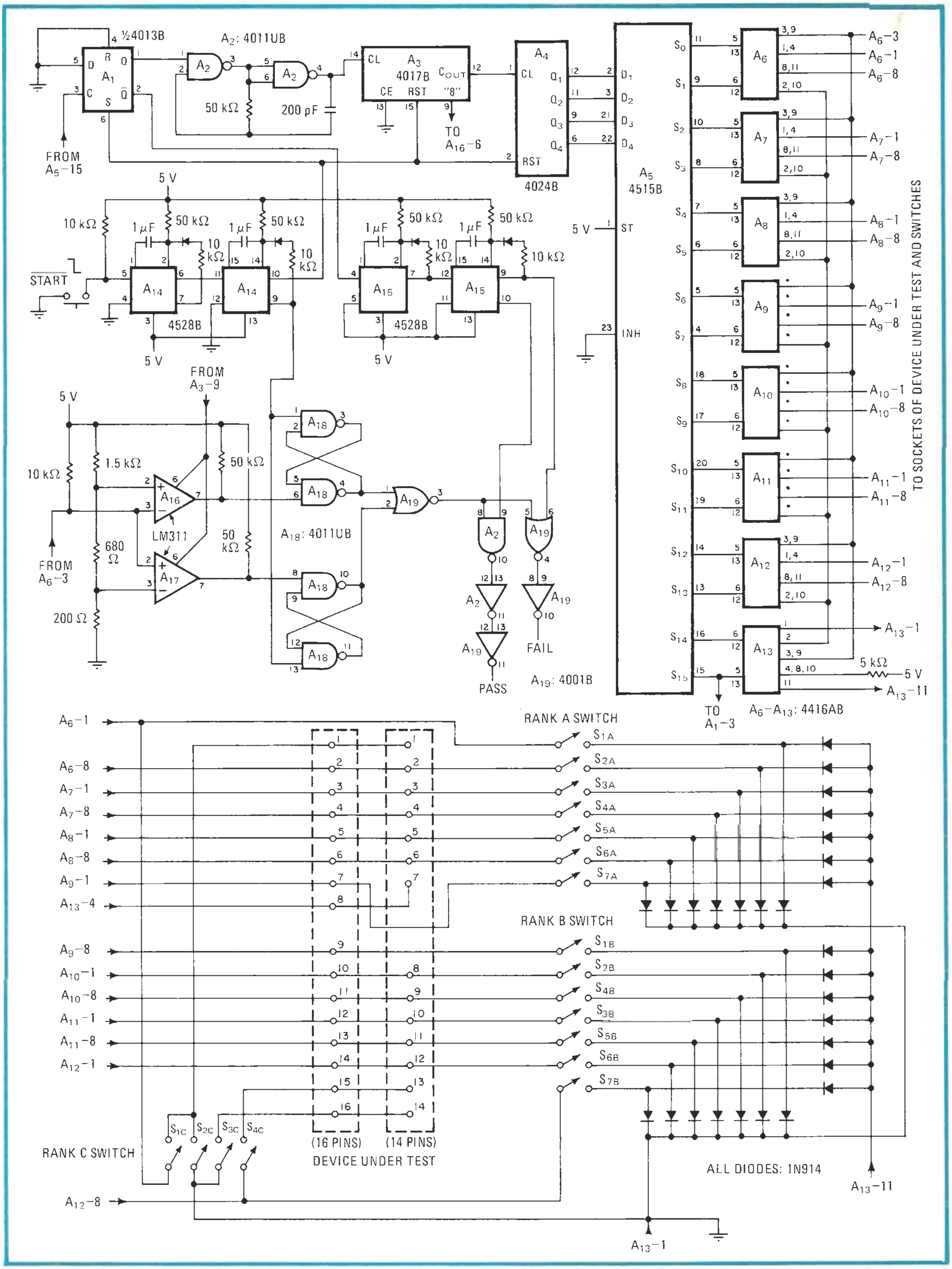

**Checking C-MOS.** Tester checks for defects in C-MOS 4000 series devices. Device under test is placed in the appropriate test socket, the rank switches set as given in table, and the start button depressed. Test results appear as active-high signal at pass or fail output.

### SWITCH SETTINGS FOR C-MOS TEST SET

|  | Switch rank A |  |  |  |  |  |  | Switch rank B |  |  |  |  |  |  | Switch rank C |  |  |  |
|---|---|---|---|---|---|---|---|---|---|---|---|---|---|---|---|---|---|---|
| Device | 1 | 2 | 3 | 4 | 5 | 6 | 7 | 1 | 2 | 3 | 4 | 5 | 6 | 7 | 1 | 2 | 3 | 4 |
| 4000B | ■ | ■ |  |  |  |  | ■ | ■ |  |  |  |  |  |  | ■ |  | ■ | ■ |
| 4001B |  |  |  |  |  |  | ■ | ■ |  |  |  |  |  |  | ■ |  | ■ | ■ |
| 4001UB |  |  |  |  |  |  | ■ | ■ |  |  |  |  |  |  | ■ |  | ■ | ■ |
| 4002B |  |  |  |  |  | ■ | ■ | ■ | ■ |  |  |  |  |  | ■ |  | ■ | ■ |
| 4006B |  | ■ |  |  |  |  | ■ | ■ |  |  |  |  |  |  | ■ |  | ■ | ■ |
| 4007UB |  |  |  | ■ | ■ |  | ■ | ■ | ■ | ■ |  |  |  |  | ■ |  | ■ | ■ |
| 4008B |  |  |  |  |  |  |  |  |  |  |  |  |  |  | ■ |  | ■ | ■ |
| 4009UB |  |  |  |  |  |  |  |  |  |  |  | ■ |  |  | ■ |  | ■ | ■ |
| 4010B |  |  |  |  |  |  |  |  |  |  |  | ■ |  |  | ■ |  | ■ | ■ |
| 4011B |  |  |  |  |  |  | ■ | ■ |  |  |  |  |  |  | ■ |  | ■ | ■ |
| 4011UB |  |  |  |  |  |  | ■ | ■ |  |  |  |  |  |  | ■ |  | ■ | ■ |
| 4012B |  |  |  |  |  | ■ | ■ | ■ | ■ |  |  |  |  |  | ■ |  | ■ | ■ |
| 4013B |  |  |  |  |  |  | ■ | ■ |  |  |  |  |  |  | ■ |  | ■ | ■ |
| 4014B |  |  |  |  |  |  |  | ■ |  |  |  |  |  |  | ■ |  | ■ | ■ |
| 4015B |  |  |  |  |  |  |  |  |  |  |  |  |  |  | ■ |  | ■ | ■ |
| 4016B |  |  |  |  |  |  | ■ | ■ |  |  |  |  |  |  | ■ |  | ■ | ■ |
| 4017B |  |  |  |  |  |  |  |  |  |  |  |  |  |  | ■ |  | ■ | ■ |
| 4018B |  |  |  |  |  |  |  |  |  |  |  |  |  |  | ■ |  | ■ | ■ |
| 4019B |  |  |  |  |  |  |  |  |  |  |  |  |  |  | ■ |  | ■ | ■ |
| 4020B |  |  |  |  |  |  |  |  |  |  |  |  |  |  | ■ |  | ■ | ■ |
| 4021B |  |  |  |  |  |  |  |  |  |  |  |  |  |  | ■ |  | ■ | ■ |
| 4022B |  |  |  |  |  | ■ |  | ■ |  |  |  |  |  |  | ■ |  | ■ | ■ |
| 4023B |  |  |  |  |  |  | ■ | ■ |  |  |  |  |  |  | ■ |  | ■ | ■ |
| 4024B |  |  |  |  |  |  | ■ | ■ | ■ |  | ■ |  |  | ■ | ■ |  | ■ | ■ |
| 4025B |  |  |  |  |  |  | ■ | ■ |  |  |  |  |  |  | ■ |  | ■ | ■ |
| 4026B |  |  |  |  |  |  |  |  |  |  |  |  |  |  | ■ |  | ■ | ■ |
| 4027B |  |  |  |  |  |  |  |  |  |  |  |  |  |  | ■ |  | ■ | ■ |
| 4028B |  |  |  |  |  |  |  |  |  |  |  |  |  |  | ■ |  | ■ | ■ |
| 4029B |  |  |  |  |  |  |  |  |  |  |  |  |  |  | ■ |  | ■ | ■ |
| 4030B |  |  |  |  |  |  | ■ | ■ |  |  |  |  |  |  | ■ |  | ■ | ■ |
| 4033B |  |  |  |  |  |  |  |  |  |  |  |  |  |  | ■ |  | ■ | ■ |
| 4035B |  |  |  |  |  |  |  |  |  |  |  |  |  |  | ■ |  | ■ | ■ |
| 4040B |  |  |  |  |  |  |  |  |  |  |  |  |  |  | ■ |  | ■ | ■ |
| 4041UB |  |  |  |  |  |  | ■ | ■ |  |  |  |  |  |  | ■ |  | ■ | ■ |
| 4042B |  |  |  |  |  |  |  |  |  |  |  |  |  |  | ■ |  | ■ | ■ |
| 4043B |  |  |  |  |  |  |  |  |  |  |  | ■ |  |  | ■ |  | ■ | ■ |
| 4044B |  | ■ |  |  |  |  |  |  |  |  |  |  |  |  | ■ |  | ■ | ■ |
| 4046B |  |  |  |  |  |  |  |  |  |  |  |  |  | ■ | ■ |  | ■ | ■ |
| 4049UB | ■ |  | ■ |  | ■ |  | ■ | ■ |  | ■ |  | ■ | ■ |  |  | ■ |  | ■ |
| 4050B | ■ |  | ■ |  | ■ |  | ■ | ■ |  | ■ |  | ■ | ■ |  |  | ■ |  | ■ |
| 4051B |  |  |  |  |  |  |  |  |  |  |  |  |  |  | ■ |  | ■ | ■ |
| 4052B |  |  |  |  |  |  |  |  |  |  |  |  |  |  | ■ |  | ■ | ■ |
| 4053B |  |  |  |  |  |  |  |  |  |  |  |  |  |  | ■ |  | ■ | ■ |
| 4060B |  |  |  |  |  |  |  |  |  |  |  |  |  |  | ■ |  | ■ | ■ |
| 4066B |  |  |  |  |  |  | ■ | ■ |  |  |  |  |  |  | ■ |  | ■ | ■ |
| 4068B | ■ |  |  |  |  | ■ | ■ | ■ | ■ |  |  |  |  |  | ■ |  | ■ | ■ |
| 4069UB |  |  |  |  |  |  | ■ | ■ |  |  |  |  |  |  | ■ |  | ■ | ■ |
| 4070B |  |  |  |  |  |  | ■ | ■ |  |  |  |  |  |  | ■ |  | ■ | ■ |
| 4071B |  |  |  |  |  |  | ■ | ■ |  |  |  |  |  |  | ■ |  | ■ | ■ |
| 4072B |  |  |  |  |  | ■ | ■ | ■ | ■ |  |  |  |  |  | ■ |  | ■ | ■ |
| 4073B |  |  |  |  |  |  | ■ | ■ |  |  |  |  |  |  | ■ |  | ■ | ■ |
| 4075B |  |  |  |  |  |  | ■ | ■ |  |  |  |  |  |  | ■ |  | ■ | ■ |
| 4076B |  |  |  |  |  |  |  |  |  |  |  |  |  |  | ■ |  | ■ | ■ |
| 4077B |  |  |  |  |  |  | ■ | ■ |  |  |  |  |  |  | ■ |  | ■ | ■ |
| 4078B | ■ |  |  |  |  | ■ | ■ | ■ | ■ |  |  |  |  |  | ■ |  | ■ | ■ |
| 4081B |  |  |  |  |  |  | ■ | ■ |  |  |  |  |  |  | ■ |  | ■ | ■ |
| 4082B |  |  |  |  |  | ■ | ■ | ■ | ■ |  |  |  |  |  | ■ |  | ■ | ■ |
| 4093B |  |  |  |  |  |  | ■ | ■ |  |  |  |  |  |  | ■ |  | ■ | ■ |
| 4160B |  |  |  |  |  |  |  |  |  |  |  |  |  |  | ■ |  | ■ | ■ |
| 4161B |  |  |  |  |  |  |  |  |  |  |  |  |  |  | ■ |  | ■ | ■ |
| 4162B |  |  |  |  |  |  |  |  |  |  |  |  |  |  | ■ |  | ■ | ■ |
| 4163B |  |  |  |  |  |  |  |  |  |  |  |  |  |  | ■ |  | ■ | ■ |
| 4401B |  |  |  |  |  |  | ■ | ■ |  |  |  |  |  |  | ■ |  | ■ | ■ |
| 4402B |  |  |  |  |  |  | ■ | ■ | ■ |  |  |  |  |  | ■ |  | ■ | ■ |
| 4404B |  |  |  |  |  |  | ■ | ■ | ■ |  | ■ |  |  |  | ■ |  | ■ | ■ |
| 4411B |  |  |  |  |  |  | ■ | ■ |  |  |  |  |  |  | ■ |  | ■ | ■ |
| 4412B |  |  |  |  |  |  | ■ | ■ | ■ |  |  |  |  |  | ■ |  | ■ | ■ |
| 4416B |  |  |  |  |  |  | ■ | ■ |  |  |  |  |  |  | ■ |  | ■ | ■ |
| 4426B |  |  |  |  |  | ■ | ■ | ■ | ■ | ■ | ■ | ■ |  |  | ■ |  | ■ | ■ |
| 4428B |  |  |  |  |  |  | ■ | ■ |  |  |  |  |  |  | ■ |  | ■ | ■ |
| 4433B |  |  |  |  |  | ■ | ■ | ■ | ■ | ■ | ■ | ■ |  |  | ■ |  | ■ | ■ |
| 4441UB | ■ |  |  | ■ |  |  | ■ | ■ | ■ |  |  | ■ |  |  | ■ |  | ■ | ■ |
| 4445B |  |  |  | ■ | ■ | ■ |  | ■ | ■ |  | ■ | ■ |  |  | ■ |  | ■ | ■ |
| 4446B |  |  |  |  |  |  |  |  |  |  |  |  |  | ■ | ■ |  | ■ | ■ |
| 4449UB | ■ |  |  |  |  |  |  |  |  |  |  | ■ |  |  | ■ |  | ■ | ■ |
| 4502B |  |  |  |  |  |  |  |  |  |  |  |  |  |  | ■ |  | ■ | ■ |
| 4510B |  |  |  |  |  |  |  |  |  |  |  |  |  |  | ■ |  | ■ | ■ |
| 4511B |  |  |  |  |  |  |  |  |  |  |  |  |  |  | ■ |  | ■ | ■ |
| 4512B |  |  |  |  |  |  |  |  |  |  |  |  |  |  | ■ |  | ■ | ■ |
| 4516B |  |  |  |  |  |  |  |  |  |  |  |  |  |  | ■ |  | ■ | ■ |
| 4518B |  |  |  |  |  |  |  |  |  |  |  |  |  |  | ■ |  | ■ | ■ |
| 4520B |  |  |  |  |  |  |  |  |  |  |  |  |  |  | ■ |  | ■ | ■ |
| 4522B |  |  |  |  |  |  |  |  |  |  |  |  |  |  | ■ |  | ■ | ■ |
| 4526B |  |  |  |  |  |  |  |  |  |  |  |  |  |  | ■ |  | ■ | ■ |
| 4527B |  |  |  |  |  |  |  |  |  |  |  |  |  |  | ■ |  | ■ | ■ |
| 4528B | ■ |  |  |  |  |  |  |  |  |  |  |  |  | ■ |  |  | ■ |  |
| 4531B |  |  |  |  |  |  |  |  |  |  |  |  |  |  | ■ |  | ■ | ■ |
| 4543B |  |  |  |  |  |  |  |  |  |  |  |  |  |  | ■ |  | ■ | ■ |
| 4555B |  |  |  |  |  |  |  |  |  |  |  |  |  |  | ■ |  | ■ | ■ |
| 4556B |  |  |  |  |  |  |  |  |  |  |  |  |  |  | ■ |  | ■ | ■ |
| 4582B |  |  |  |  |  |  |  |  |  |  |  |  |  |  | ■ |  | ■ | ■ |
| 4584B |  |  |  |  |  |  | ■ | ■ |  |  |  |  |  |  | ■ |  | ■ | ■ |
| 4585B |  |  |  |  |  |  |  |  |  |  |  |  |  |  | ■ |  | ■ | ■ |

predominately caused by or result in internal shorting of wires between leads or open bonds to device pads and packaged posts. The detection of these failures is relatively simple for C-MOS chips because each input and output port is connected to two diodes internal to the device, one forward-biased with respect to the positive supply voltage and the other back-biased with respect to the negative supply. Hence it is necessary only to check whether each diode is opened or shorted. This, in principle, is simple to do.

Most C-MOS devices have at least 10 active ports, however, and consequently it becomes a problem to detect failures in many diodes while performing the minimum number of measurements. The proposed solution arrived at for testing C-MOS devices having up to 16 pins is shown in Fig. 1.

Briefly, $A_2$ serves as a gated oscillator operating at 100 kilohertz for stepping $A_3$, the 4017 decade counter, when the start button is pressed. $A_3$ generates a strobe for circuit timing and also advances $A_4$, the 4024 binary counter, so that each location of the 4515 1-of-16-line decoder can be addressed.

The decoder sequentially steps once through $A_6$–$A_{13}$, the quad analog gates, each of which is wired as a double-pole, single-throw switch. The output ports of the 4515 can thus provide a voltage for testing the diodes at all pins of the device under test.

Any transmission-gate output port connected to a shorted diode will move low. Open diodes will cause the output to float. The results of each individual diode test are monitored by window comparator $A_{16}$–$A_{17}$. The comparator's output is then latched by $A_{18}$ and passed into either the pass or fail gate at the output.

Switches $S_{1A}$–$S_{7A}$, $S_{1B}$–$S_{7B}$, and $S_{1C}$–$S_{4C}$, the so-called rank switches, which are connected to the test-socket pins, must be set accordingly to check the particular device desired. Required switch closures are presented in the table for all 14- and 16-pin 4000-series devices produced by Solid State Scientific Inc.

Note that the 28-diode matrix connected to the rank switches must be individually switched into the circuit of the particular device under test. The matrix is wired so that if there are any unused (inactive) pins in the device, the diodes will simulate the device's diodes; the open-short test may therefore be performed at each pin of the device without generating an erroneous response (that is, an open-circuit indication). □

---

Engineer's notebook is a regular feature in *Electronics*. We invite readers to submit original design shortcuts, calculation aids, measurement and test techniques, and other ideas for saving engineering time or cost. We'll pay $50 for each item published.

# Overvoltage indicator can be added to C-MOS IC tester

by Rajni B. Shah
*Rohde & Schwarz, Fairfield, N.J.*

A warning light that signals the presence of an overvoltage can be added to the features described in "In-circuit IC tester checks TTL and C-MOS" [*Electronics*, May 30, 1974, p. 120]. A light-emitting diode glows if the IC under test has any pin voltage greater than 18 V. The warning circuit, like the rest of the test circuit, draws its power from the IC being checked. As described here, it can operate at overvoltages as high as 30 V.

The indicator circuitry, shown below, is connected to the tester described previously. Warning LED $D_1$ is shunted by $Q_1$, which is normally held in conduction by the potential applied to its base through $R_2$. $Q_2$ is normally inhibited by the base connection through $R_3$. If the voltage at any IC pin exceeds 18 V, however, zener diode $D_2$ breaks down, and $Q_2$ starts to conduct. Conduction in $Q_2$ pulls the base of $Q_1$ up to turn off $Q_1$. The voltage drop across $Q_1$ then is sufficient to light up LED $D_1$, indicating the overvoltage. ☐

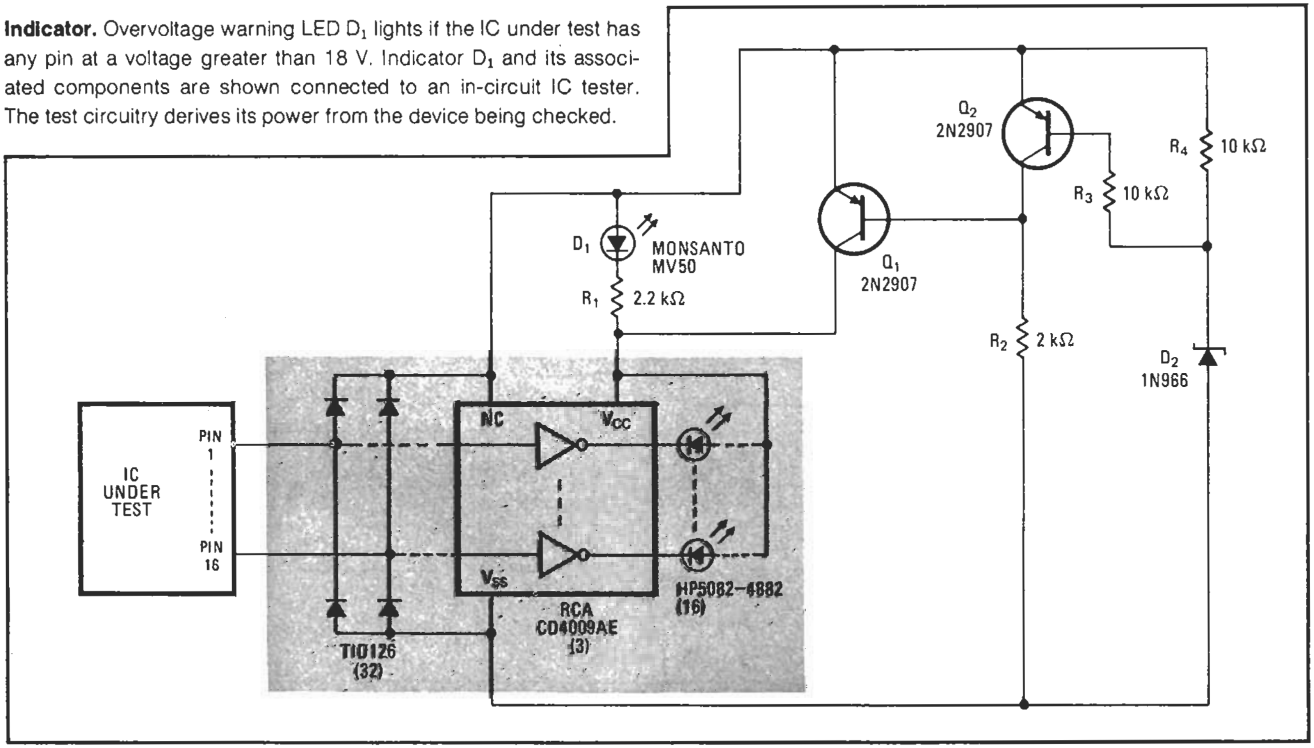

**Indicator.** Overvoltage warning LED $D_1$ lights if the IC under test has any pin at a voltage greater than 18 V. Indicator $D_1$ and its associated components are shown connected to an in-circuit IC tester. The test circuitry derives its power from the device being checked.

# Digital IC TESTER

*Need to identify unmarked IC's? Check out "defective" ones? Learn how digital-logic circuits work? The Programma III, which you can build for about $100, will do all that and more.*

**GARY McCLELLAN**

UNTIL RECENTLY, IC TESTERS HAVE BEEN a rarity in electronics labs, and that is unfortunate because they can be so helpful—in identifying unmarked IC's, in checking for defective ones, as training devices, etc. Sad to say, they are frequently expensive, and often require other test equipment to perform their functions. But meet the Programma III digital-IC tester! It allows you to check IC's at a breakthrough low cost, and replaces several pieces of test equipment—all in one neat package.

The device was originally designed for use in identifying unknown IC's, but it seems as if every day a new use pops up for it. For example, a cable was made up using a 16-pin IC test-clip and DIP header. The header is plugged into the test socket on the IC tester, and the clip snapped over a suspect IC in another piece of equipment. The result is a low cost "logic anayzer," or a device that will display many logic states at once. That can speed up troubleshooting immeasurably in many cases. Commercial logic analyzers cost thousands of dollars, while ours costs a tiny fraction of that. More on applications later!

The Programma III has many novel features that help to make it versatile as well as low-cost. A "zero insertion force" (ZIF) test-socket is used so that components can be easily inserted and removed without bending or breaking leads. That's important—you know how easy it is to break a pin.

Connections to each pin of the test socket are made via an array of jacks. For each pin there is a jack that can be connected either to ground, a pulse signal, or +5 volts. Standard miniature phone-plugs, similar to those used on transistor radios, are plugged into the jacks, applying the desired signal or voltage, or shorting the IC-pin to ground. As a bonus, components may be wired to the plugs, allowing you to build up actual circuits for testing parts. (Good examples would be the NE555 timer, and any one-shot.) The pulse signal just mentioned can be used to increment counters or registers. It is produced by pressing the PULSE button.

Finally, the logic-level display is unique. It uses tri-color LED's to show the status of each IC pin, with red indicating a logic-high, yellow indicating a pulse condition, and green indicating a logic-low. Those features combine to make the Programma III a device that is invaluable in your work with digital IC's.

The construction of the Programma III is something special. The front panel is a PC board! That gives you a finished project that looks just like the one shown in the photographs, and there is no tedious lettering of the jacks required. In addition, the lettering on the board resists wear far better than any transfer-type lettering can. The "panel-board" concept makes project building easier, and the final result looks first rate. Inside, the panel-board greatly simplifies the wiring, as all wire connections are made directly to the jacks.

The display electronics are also something special. You'll be surprised to dis-

cover that there are only seven IC's in the whole unit! They are all standard, low-cost parts, which makes them easy to find. In addition, this is probably one of the first projects you've seen that uses a VMOS power FET. It does a superior job in the pulse-generator section, and allows pulses to swing the full five-volt range. The display electronics mount on a separate PC board, and simply plug into the panel-board, further simplifying construction.

## How it works

The Programma III owes its unique features to some clever applications of standard IC's. Let's look at the circuit before starting construction.

The device is built on two PC boards, which we'll call the panel board and the display board. The larger board, which contains the IC test-socket and the jacks, is the panel board; the smaller board, which contains the LED's and IC's, is the display board. Be sure to keep those distinctions in mind as you read the circuit theory and assemble the project.

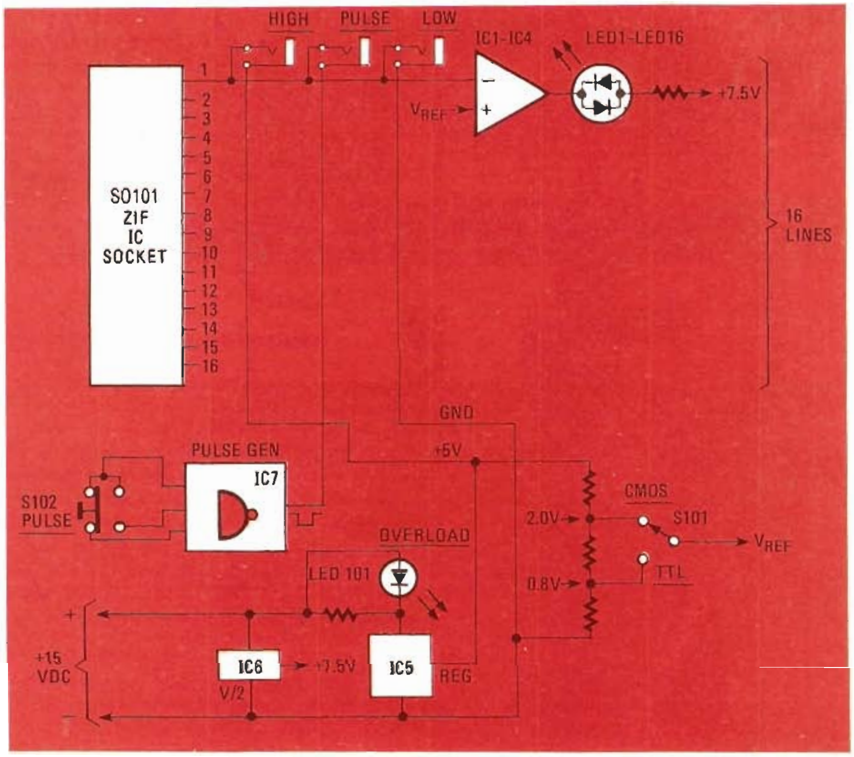

FIG. 1—SHORTING PLUGS inserted in jacks (shown at top) determine whether a logic-high, logic-low, or pulse is applied to each IC pin.

## Display board

This is the smaller board, but since it contains the active circuitry, it will be discussed first. Refer to Fig. 1, and the schematic in Fig. 2, for details as you read about it. The display board contains a power supply, pulse generator, and a set of comparators. Figure 1 shows that circuitry in its basic form, but note that the IC socket, jacks, and switches are all on the panel board. You'll be surprised to discover that the display-board isn't much more complicated than its block diagram!

The power supply is simple, but has a clever twist. The IC tester may be powered by an unregulated 12–18-volts-DC source. That voltage runs the comparators and an IC audio amplifier, IC6. Now you may be wondering what a power amplifier is doing in a power supply—especially since nothing is connected to its input! But that IC has what the manufacturer calls a "self-centering output stage." That means it will effectively divide the power supply voltage by two, providing the LED's with the proper voltage. That neat little problem-solver replaces two power transistors and an op-amp, reducing the parts count...and cost.

Power for a standard five-volt regulator, IC5, is supplied through a resistor. The IC supplies regulated power for the pulse-generator circuit and for the IC being tested. Since it is possible to short the five-volt supply with a bad IC, or by misusing the tester, overload protection is built in; that's the job of the series resistor. You can draw up to 100 mA without affecting the five-volt power, but exceed that by much and the output voltage drops quickly. That voltage drop protects the unit from damage by overloads and the OVERLOAD LED lights up to indicate that there's a problem.

Finally, the five-volt output is tapped to provide two reference voltages; those drive the comparators, which will be discussed shortly. The voltages correspond to the thresholds for TTL (0.8 volt) and CMOS (2.0 volts) devices. We want to know when the outputs from the IC being tested go above or below those values; if they don't, the part is defective.

The pulse-generator circuit is simple, and also a bit unusual. Refer to the schematic for details. It consists of NAND gates IC7-a and IC7-b, and Q1. The gates are wired as a "bounceless pushbutton"—a circuit that generates a single pulse each time the PULSE button is pressed. That's necessary because switch bounce can cause many pulses when the switch is pressed, and that makes checking flip-flops, counters, and registers impossible! The output from one of the gates switches a new device-type called a VMOS power FET, which features high input-impedance and high output-current. It is used to advantage in the circuit because it can bring the pulse line to within a few millivolts of ground. That insures more reliable switching of the IC under test, as conventional transistors may come as only close as 0.6 volt of ground.

The comparator circuit is as simple as the block diagram makes it out to be. It contains sixteen op-amp comparators, and each is driven by an IC test-socket pin. Type LM324's—with four comparators in each IC—are used, so the circuitry is contained in just four packages. The $V_{REF}$ input goes to all comparators.

### PARTS LIST—DISPLAY BOARD

**All resistors ¼ watt, 5%, unless otherwise noted**
R1, R2—10,000 ohms
R3—470 ohms
R4–R19—100,000 ohms
R20–R35, R40—1000 ohms
R36—68 ohms, 1 watt
R37—8200 ohms
R38—3300 ohms
R39—2200 ohms

**Capacitors**
C1—1000 µF, 25 volts, axial-lead electrolytic
C2–C7—0.1 µF, 25 volts, ceramic disc

**Semiconductors**
IC1–IC4—LM324N quad op-amp
IC5—MC7805 5-volt regulator
IC6—LM380N audio amplifier (14-pin package)
IC7—CA4011 quad CMOS NAND gate
Q1—VN10KM (Siliconix) VMOS power FET (Radio Shack 276-2070)
LED1–LED16—tri-color LED (see text)
SO1—16-pin IC socket

**Miscellaneous:** PC boards, 14-pin IC socket, solder, etc.

**The following is available from Technico Services, PO Box 20HC, Orangehurst, Fullerton, CA 92633: set of two etched & drilled PC boards (IC-1), $30.00. Available from ABC Electronics, 2033 W. La Habra Boulevard, La Habra, CA 90631 is a set of all parts, *excluding PC boards* (IC-1P), $85.00. CA residents please add sales tax; foreign orders please add $3.00 for postage & handling.**

That voltage is equal to the IC threshold-voltage, and comes from resistors connected across the five-volt power supply.

In operation, the comparators compare the voltages on the IC pins to $V_{REF}$. If the IC-pin voltage is greater, the output of the comparator will snap high. That connects the LED (through a current-limiting resistor) to + 15 volts, causing the red diode in the package to glow. On the other hand, if the IC-pin voltage is less than $V_{REF}$, the comparator output snaps to ground, causing the green diode in the package to glow. Just think of the comparator output as an SPDT switch; all it does is to switch one side of the LED to ground, or to + 15 volts. The other side of the LED stays at 7.5 volts. If the IC pin is pulsed rapidly, the two diodes in the LED package will turn on and off in turn and the colors blend to form yellow. A simple, but neat and elegant way to indicate logic levels, don't you think?

## Panel board

The panel-board circuitry is restricted to just a few components. They include a switching matrix made up out of jacks, and a few switches. The arrangement for pin 1 is shown in Fig. 1. The wiring for the other pins from the IC socket are arranged in the same manner, with jacks from the HIGH, PULSE, and LOW lines connecting to it. Although it looks like quite a bit of wiring, the PC board simplifies things considerably. Furthermore, the connections to the display board are made using just two connectors. That makes construction, testing, and troubleshooting simple.

## Assembly

We'll assemble the display board first. It isn't difficult, but it is important to follow instructions. The LED's, for example, must be installed *last*. They mount a fixed distance off the display board, and if you install them incorrectly, you won't be able to install the panel board! If you follow the directions, there should be no problem with assembly.

The first step is to obtain the parts. Since the display board is double sided, and tough to make, you may want to buy it from the source in the Parts List. Of course you may make your own using the artwork provided in Figs. 3 and 4. (The same goes for the panel board, which will be shown in the next part of this article.)

The IC's should be no problem, but be sure to use first-quality parts. If you scrounge the IC's from the junkbox, be sure to test them in an active circuit to make sure they are good. It's embarassing to build an IC checker and discover it won't work due to a bad IC! Actually, since the IC's this project uses are so inexpensive, I can't imagine why you wouldn't use factory-fresh IC's anyway. The extra cost of new parts is a lot less

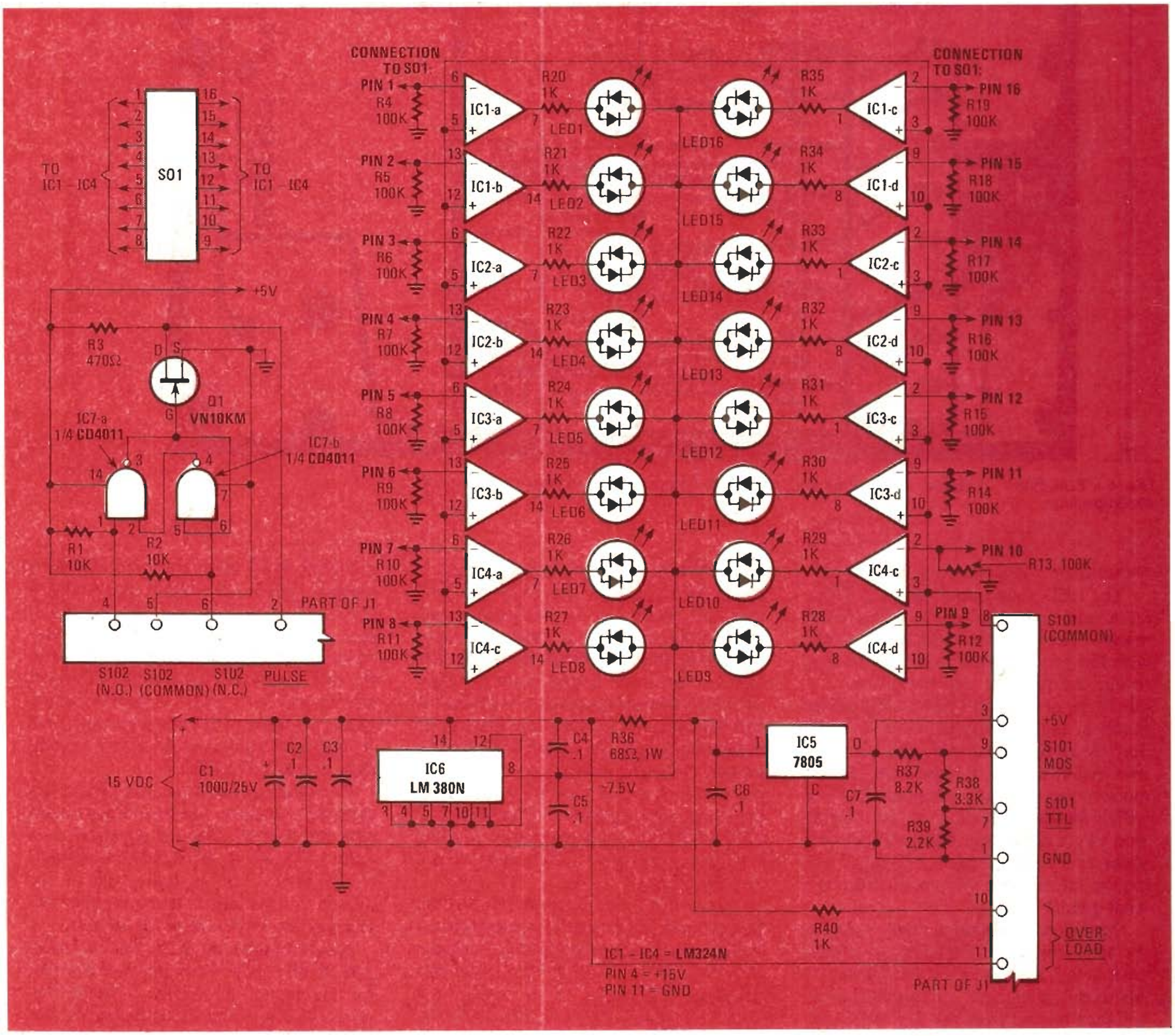

FIG. 2—VMOS POWER FET, Q1, permits test voltages to approach ideal TTL or CMOS logic levels.

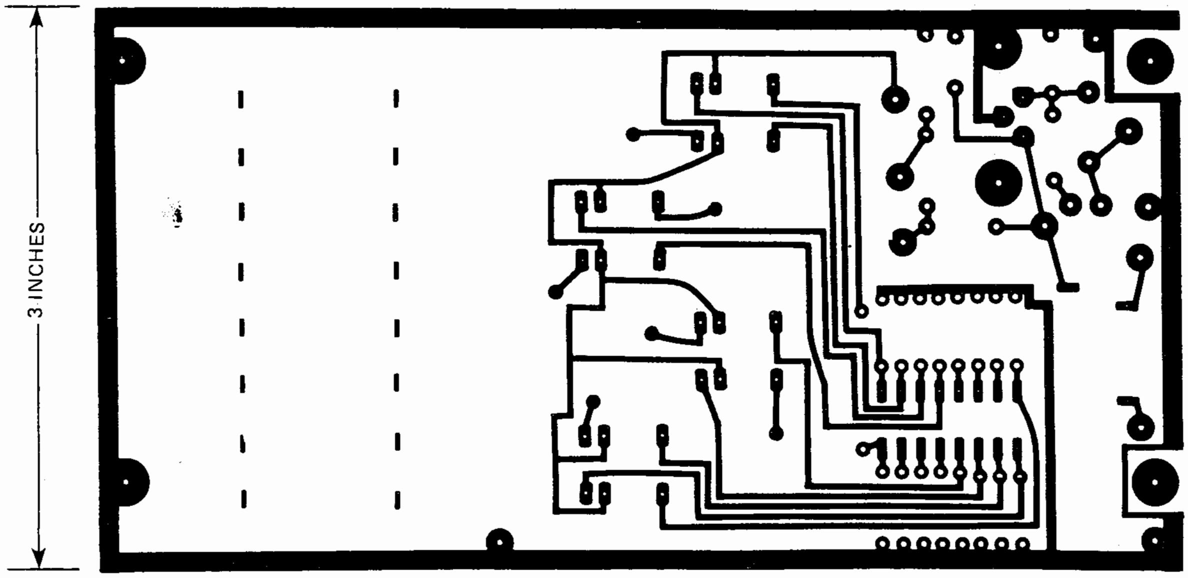

FIG. 3—THIS SIDE OF IC TESTER's display board is the one on which most components are mounted.

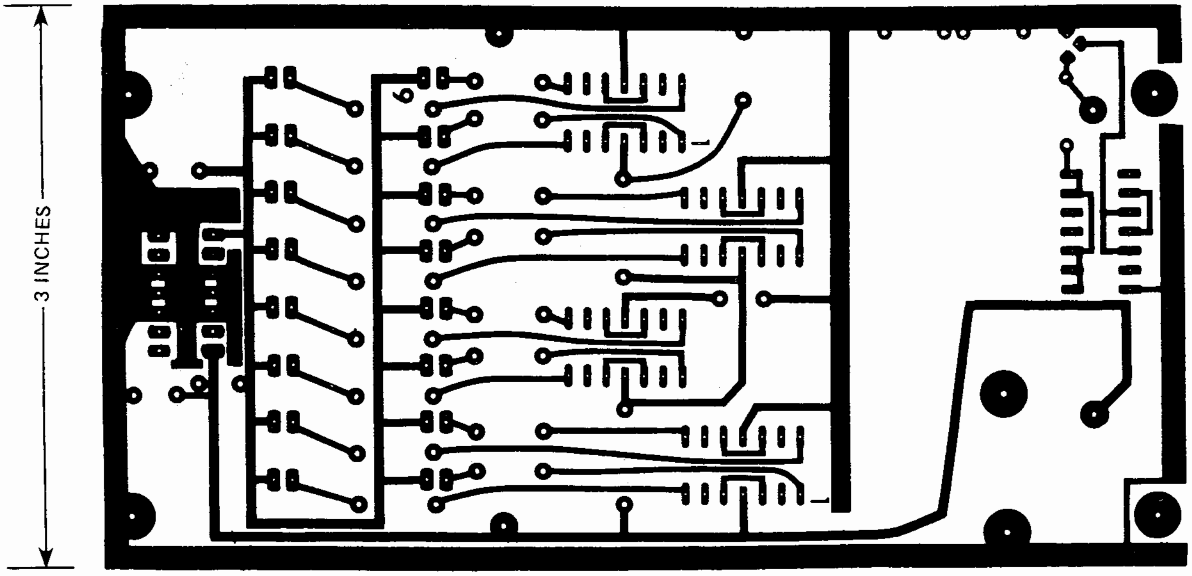

FIG. 4—"FOIL-SIDE" of display board. Note that, while board is double-sided, holes need not be plated-through.

bother than troubleshooting later on.

The LED's are important, too. There are several types of tri-color LED's on the market. The Programma III uses the kind with the two diodes in parallel, and as a result, the package has *two* leads. Another type of tri-color LED has the diodes in series, and the package has *three* leads. Stay away from that one; you want the two-leaded device. If you want to save money, you can substitute standard red LED's for the ones called for. The display won't look as elegant, because logic-low states won't be indicated, but you'll still get the information you need, and that's what counts.

Keep those tips in mind when shopping for parts. Since it is important to control costs today, keep them low by reading the ads in this magazine, comparing prices, and then buying from the best suppliers.

Once you have the boards and parts, it's time to get started. Refer to Figs. 5 and 6 for details for this phase of construction. Study Fig. 5 for a moment, and orient your board so it faces the same way. **Note that the parts-placement diagrams show the board from the side on which the components are mounted but that the foil pattern you see in the diagrams is on *the other side* of the board.** Now you are all set to install the parts, which consist of IC's, jumpers, resistors, and capacitors. The LED's—LED1–LED16—and the wires to SO1 won't be installed yet; *don't* rush and put them in first!

Begin with the IC's and insert an LM324 at IC1. Normally I would recommend using sockets for the IC's, but since the some of the IC pins have to be soldered on both sides of the board, it's better to solder the IC's directly to the board. Use gentle heat, and don't cook anything. Press the IC in place with your fingers, then flip the board over and solder all 14 leads to the foil. Then return to the *component side* of the board and carefully solder pins 2, 5, 6, 9, 19 and 13 to the foil. Use solder sparingly, and watch out for shorts. If you accidently create a solder bridge between two terminals, heat it , and push away the solder with a toothpick or X-ACTO knife.

Continue by installing another LM324 at the IC2 position. Solder it in as you did with the first IC. After that, install two more LM324's at the IC3 and IC4 positions. When you're done, check for missed connections and shorts, and correct any errors before going farther.

Moving to the left of the board, install an LM380 at IC6. (You may use a socket for this device, if you like.) Orient it as shown in Fig. 5 and solder the pins to the foil on the reverse side of the board. Move

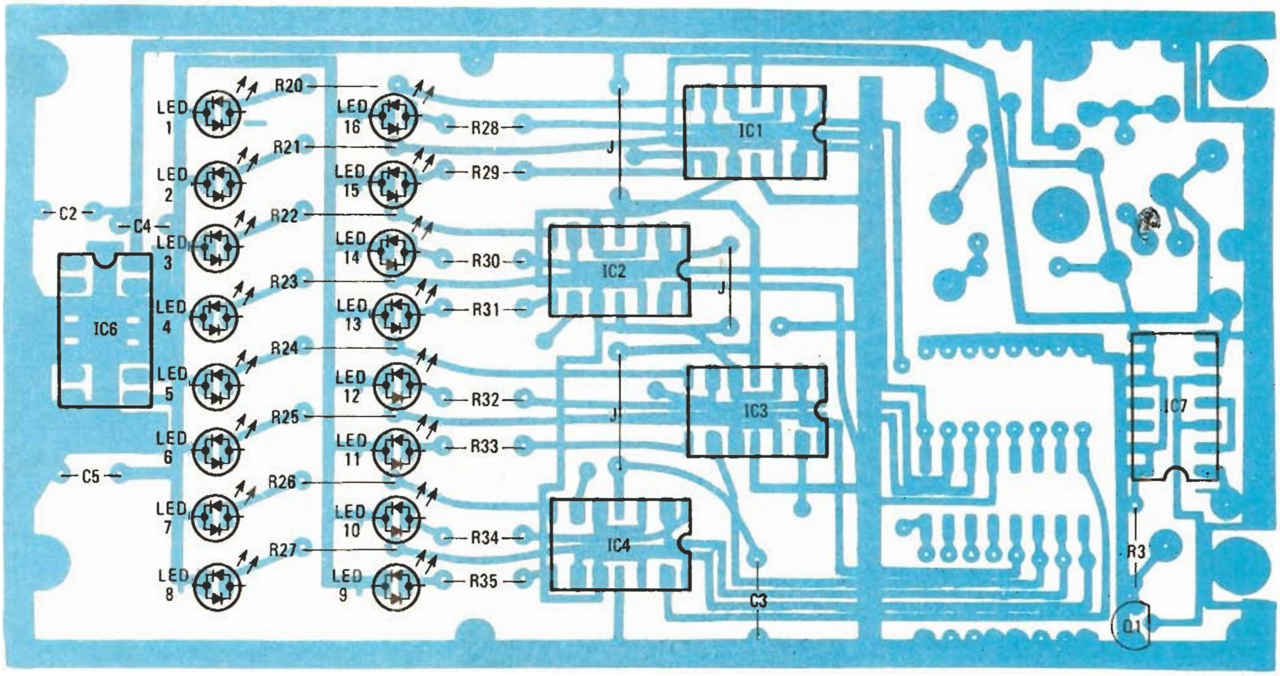

FIG. 5—PARTS PLACEMENT on "component-side" of display board. Note that foil pattern shown is on side of board *opposite* the one on which components are mounted.

to the right of the board and install a CD4011 at IC7. Press it in place with your finger, then turn the board over and solder the pins to the foil. Flip back to the component-side of the board and carefully solder pins 1, 6, and 8 to the foil on *that* side of the board. Be careful not to bridge pin 6 and pin 7; they are close together because of the foil trace nearby. That takes care of the IC's. Check your work again for shorts and errors, fix any problems, and you can continue.

There are three jumpers, and they come next. They are by IC1, IC2, and IC3, as indicated in Fig. 5. You can make the jumpers from short pieces of hookup wire, or short lengths of resistor lead. Install the first jumper to the left of IC1 and solder the leads to the foil on the other side of the board. Move across IC2, and install another jumper to the left of IC3. Position it so that it can't touch the foil that runs nearby—in fact, you should slip a piece of insulated tubing over the jumper if you used bare wire. Move to pin 1 of IC3, and install the third jumper. Note that it runs between the two IC's, and parallel to them.

The resistors come next. Note that these are all 1K units except for R3 (470 ohms), which is off in a corner by itself and which should be installed first. Solder its leads to the foil on the other side of the board. Move to the left of the LM324's and start installing the 1K resistors—note that there are 16 of them—as shown in Fig. 5. Then turn the board over and solder the leads to the foil. Be sure to clip off the excess lead lengths.

Now for the capacitors. Note that they are all of the same value—0.1 $\mu$F. Either ceramic disc or Mylar types may be used. Starting at the far left of the board, install 0.1 $\mu$F discs at C2, C5, and C4. Solder the leads on the other side of the board, and clip off the excess. Position the capacitor bodies so that they stand straight up. Then move along the bottom of the board, and install C3. Press its body flat against the board before soldering the leads; we don't want this part to stand up in the air. Clip off the excess leads, and you are finished with the capacitors.

For the time being, the last part to be installed on the component side of the board is Q1, the VMOS power FET. It goes in the bottom right corner, next to the 470-ohm resistor. Install the device as shown, with the flat in the case pointing toward the right edge of the board. Solder the leads on the other side of the board, and clip off the excess. That completes the component installation on this side of the board for now, though we still have to install the LED's and wire SO1.

Next time we'll complete the display board and wire it to the panel board. We'll also finish up construction and put the IC tester into operation. **R-E**

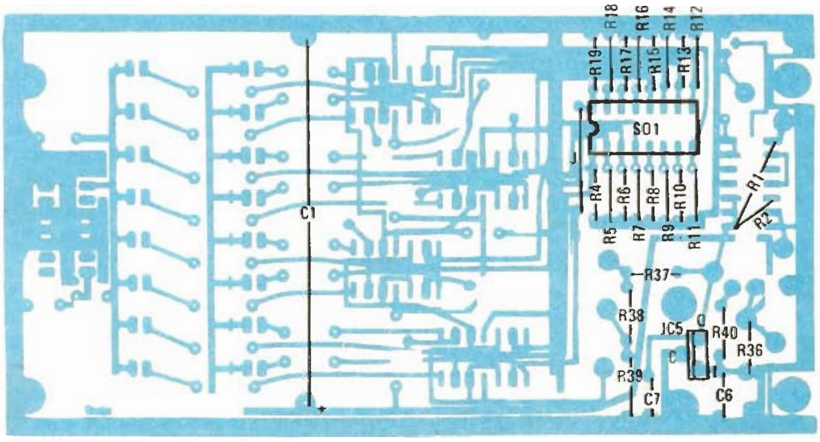

FIG. 6—PARTS PLACEMENT on "foil-side" of display board. Resistor R2 (at right) is soldered to pads on opposite sides of board.

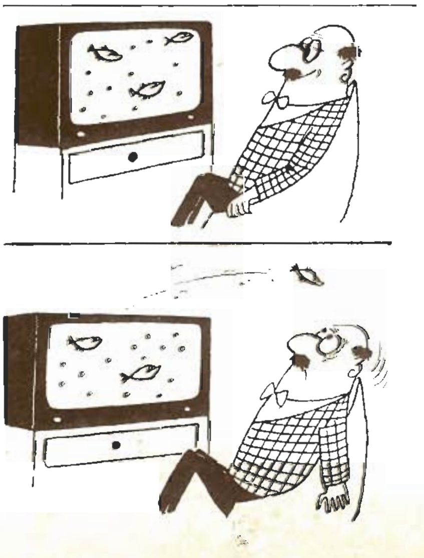

# Digital IC Tester

*An IC tester like the Programma III can make work a lot easier for you. Here in Part 2 we'll continue with the construction of the device*

**GARY McCLELLAN**

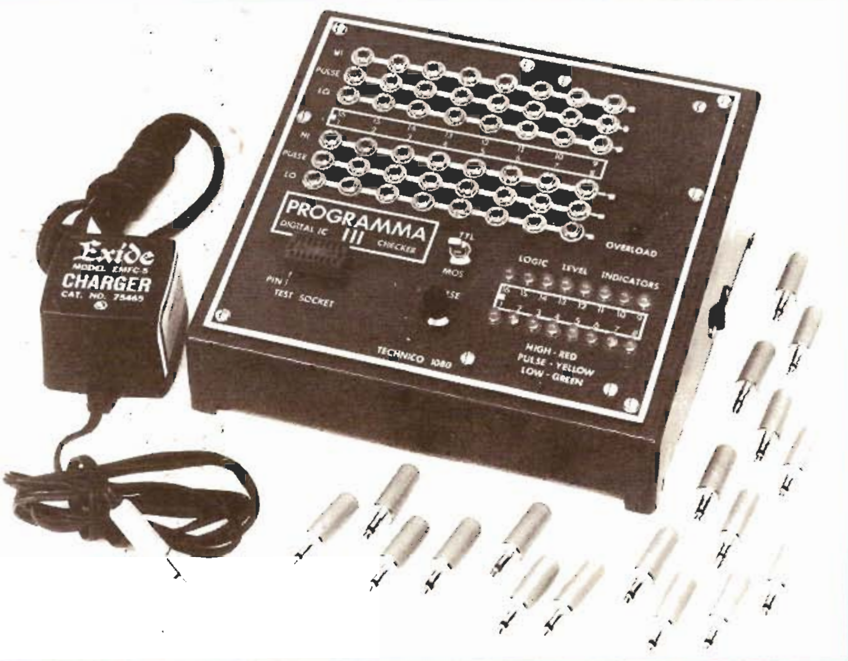

## Part 2

IN THE FIRST PART OF this article we finished one side of the display-board portion of the IC tester. Let's now start on the other side.

### Display board: other side

Turn the display board over, position it as shown in Fig. 6 and install the 7805 voltage regulator, IC5, at the bottom right corner. Note that the tab faces left. Once it is in place, turn the board over and solder the leads; then clip off any excess. Note that although there are two large pads by the voltage regulator, nothing will be mounted on them.

The next step is to install the resistors. Start with R4 through R19. They're the 100K units around SO1, and you'll need 16 of them. Install the R12–R19 units first, then solder the leads on the other side of the board and clip off the excess. Turn the board back over so the resistors are visible and solder them to the foil in four places at the edge of the board (the pads can be seen in Fig. 5, (see January 1983 issue of **Radio-Electronics**) at the bottom of the board). That step is important because it connects the ground foils on both sides of the board together, so don't forget to do it.

After that, install R4–R11 in the same way. Move to the foil side of the CD4011, and solder two 10K resistors, R1 and R2, across the IC pins. Connect R1 between pin 8 and pin 1, then connect R2 between pin 8 and pin 7. Move to the bottom, and install a 68 ohm, *1-watt* resistor at R36. Note that it mounts vertically. Solder the lead closer to the middle of the board, and to both the top and bottom sides of the board; that gets the power to the IC's. Moving on, install a 1K resistor at R40. Then move left and install an 8.2K resistor at R37. Finish up the resistors by installing a 3.3K unit at R38, and a 2.2K unit at R39. Check your work carefully. If you had any problem installing a resistor, chances are it is in the wrong place! Check to be sure. When you are sure all the resistors are installed properly, you can continue.

Next, SO1 and the jumpers can be installed. Do not omit the socket; it's the connector for the wiring from the panel board. Install SO1 as shown, and turn the board over to solder it in. Turn the board back over and install a jumper between the two points to the left of the socket and resistors. A leftover resistor lead will work fine. After the jumper is soldered in, position it away from the copper foil nearby to prevent shorts.

The capacitors finish up this phase of the wiring. Turn to the voltage regulator, and install 0.1 $\mu$F ceramic discs above and below it at C6 and C7. Clip off the excess leads and you are done. Figures 7 and 8 show how the completed component- and foil-sides of the display board should appear.

Next, position the display board so that the IC's are facing up and, referring to Fig. 9, install the six jumpers from SO2 to the IC's. Use short lengths of insulated hookup wire.

The next step is to install connector SO1. Refer to Fig. 10 for details. Note that the wires are all inserted from the "foil" side of the board. First, cut eleven pieces of hookup wire, each about four inches long. Prepare one end of each wire, and insert a wire into each of the holes indicated in the illustration. Then route the wires for pins 1, 10, and 11 of

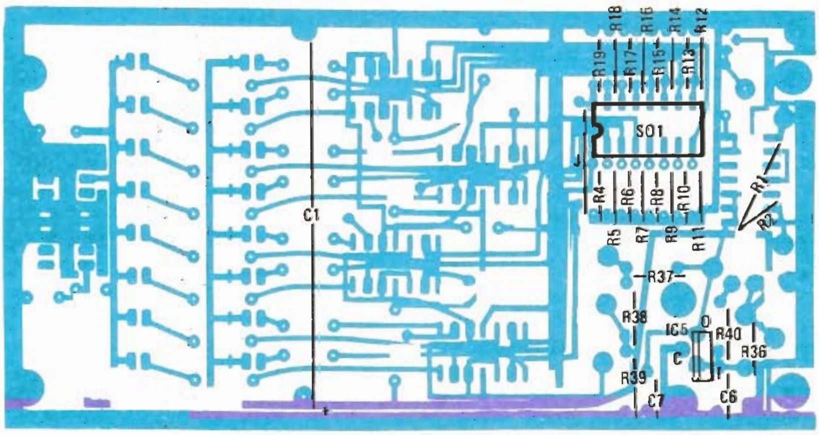

**FIG. 6—PARTS PLACEMENT on "foil-side" of display board. Resistor R2 (at right) is soldered to pads on opposite sides of board.**

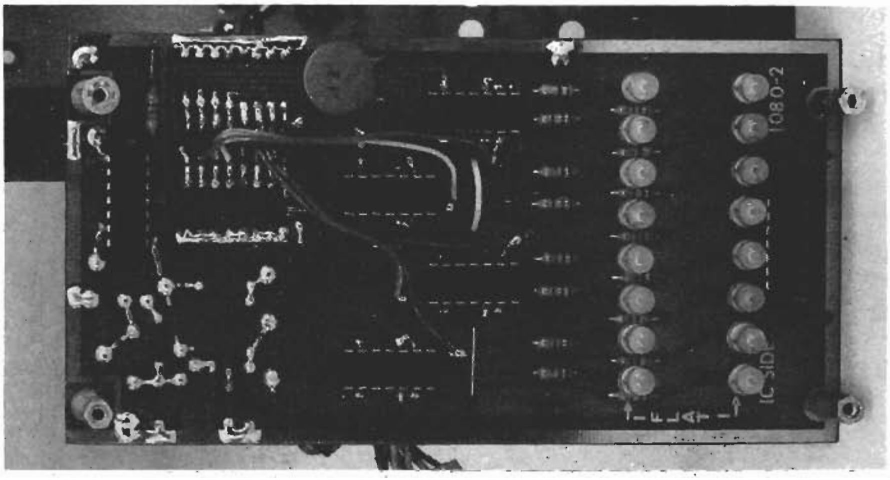

FIG. 7—"COMPONENT-SIDE" of display board. Mounting of LED's will be described in next part of article—don't install them without reading it.

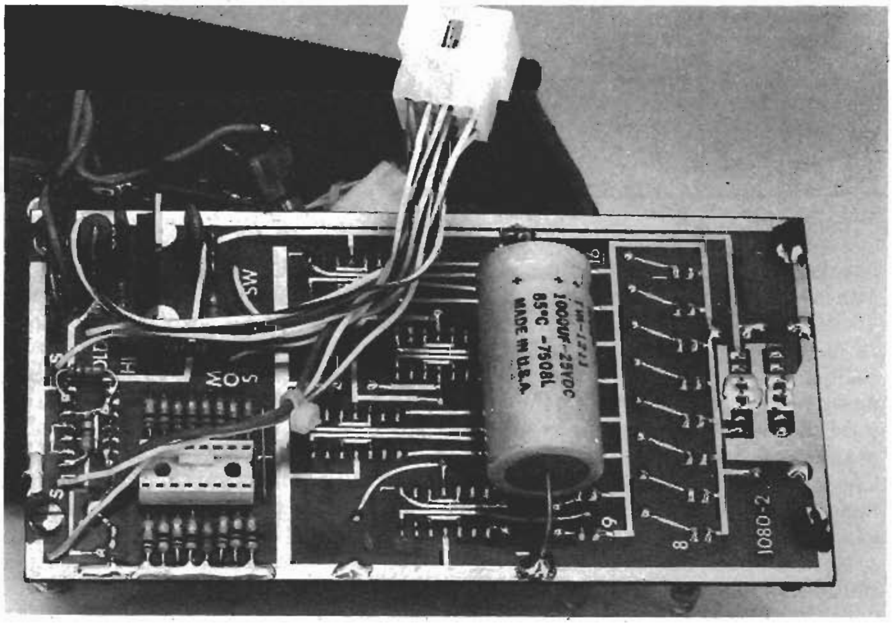

FIG. 8—"FOIL-SIDE" of display board. Multi-wire assembly connects to components on panel board.

the connector over the voltage regulator and group them with the others. That will make a neat cable.

Trim the ends of the wires so that the total cable is about three inches long. Then prepare each wire end, and install the connector. Note the pin identifications in the illustration. I used a Molex 12-pin nylon connector for P102, but almost anything with the correct number of pins will work. After the wires are connected to the pins, check your work for errors and correct any you may find. If you like, lace the wires together to give a professional appearance.

Now for the power cable. Prepare two 1-foot lengths of hookup wire. If possible, use one red, and one black, wire. Connect the wires to the board as shown in Fig. 10. The red wire should go to the hole indicated by a "+," and the black one to the one indicated by a "−." Twist the wires together.

The final step (with the exception of installing the LED's) is to install capacitor C1. Be sure that it's oriented properly. Push the leads through the foil, and solder. Be sure to solder the negative terminal on *both* sides of the board.

## LED installation

If you didn't buy the double-sided panel board, you'll want to make one up using the foil patterns shown in Figs. 11 and 12. You can then install the LED's on the display board (however, you need the panel board to do that) and be done with it.

Place the panel board in front of you so that you can read the lettering on it. Notice the sixteen positions below the label "LOGIC LEVEL INDICATORS." They are for the LED's and will have to be drilled and/or filed to a diameter of 0.200 (2/10)-inch. You may want to use several increasingly larger drill-bit sizes to do that. Stop and check the hole size from time to time using one of your LED's until the fit is snug. Make another hole the same size at the position above the "OVERLOAD" label using the same procedure.

At the edges of the board there are seven large positions marked, and, slightly inboard of them, four smaller ones (those four are for mounting the display board). All eleven should be drilled to 1/8-inch for 4-40 hardware. Then, turn the panel board over and install a 3/4-inch threaded spacer at each of the four "inboard" holes. (If you can't find the spacers, you can make a substitute for them with 4-40 × 1 bolts and nuts. First, install a bolt and secure it to the panel with a nut. Then, add another nut, but screw it down only until the distance between the panel and the side of the nut away from the panel is 3/4 inch.) Now you're ready to install the LED's.

Refer back to Fig. 5 (in Part 1), and note the positioning of the LED's. The flat spot on the package (or the shorter lead) indicates the cathode, and should point to the left. Insert the top row of LED's, LED9–LED16, in the display board, but don't solder the leads. Place the panel board on the top of the spacers on the display board, and temporarily secure it in place with the 4-40 hardware. Push each LED forward so that it seats in the appropriate hole on the panel board. After all the LED's are in place, solder their leads to the foil, and clip off the excess. Separate the display board and the panel board, and install the bottom row of LED's, LED1–LED8. Again, temporarily install the display board on the panel board and push the LED's through the holes. Solder the leads in place and clip off the excess lengths. That completes the LED installation, so remove the display board.

## Panel board

The rest of the work on the panel board consists mainly of installing jacks and wiring two cables. The schematic in Fig. 13 will help you understand what has to be done. It's routine work, but you'll get the best results if you take your time.

The first thing is to drill more holes. Position the board so you can read the legend "PROGRAMMA III." First, drill all the "HI," "PULSE," and "LO" holes to a diameter of 0.230-inch (a little less than 1/4 inch). A few tips on drilling PC-board material: To avoid tearing the foil, use at least three smaller drill sizes before you get to 0.230-inch. Better yet, start small and use a file or reamer to enlarge the holes. Use one of the jacks that will be installed to check hole size periodically. Carefully enlarge each hole until a jack fits snugly in it. Then deburr the holes, working from both sides of the board; use a sharp knife like an X-ACTO knife.

Next come the holes for the two switches. They, of course, are between the "TTL" and "MOS" legends, and just below the word "PULSE." Using the same technique as you did for the jack holes, enlarge the switch holes to 0.250-inch.

Now, the small parts can be mounted on the panel board. They include the IC test socket (SO101), the switches, and the OVERLOAD LED. The jacks will be installed later. Install the test socket first, from the front side of the board (the side with the lettering). After that, install a SPDT toggle switch at the TTL/MOS hole. Then install an SPDT pushbutton switch in the PULSE hole. Finish up this phase of construction by installing an LED in the OVERLOAD hole, from the rear of the board. Use quick-setting epoxy on the rear side of the board to secure the LED in place. Allow the epoxy to dry before you continue.

Now for the jacks. Refer to Fig. 14 for details, and note how the lugs on the jack bodies are oriented on the rear side of the board. For easiest installation, start at the top of the board with the "HI" row. Install the jacks, one by one, positioning the bodies as shown and then tightening the hardware. After that row is completed, continue with the "PULSE" row just below it. After that, move down to the "LO" row, and repeat the whole process. When you've finished the three rows, check for loose hardware and tighten things up as required. Then install the other three rows of jacks in the same fashion.

## Panel board wiring

The jack wiring comes next. Note that only one lug of each jack will be used; the ground connections have already been made by attaching the jacks mechanically to the foil on the board. Again, refer to Fig. 14 for the wiring. Start with the pin-16 series of jacks (HI, PULSE, and LO), and tie the three terminals together with a

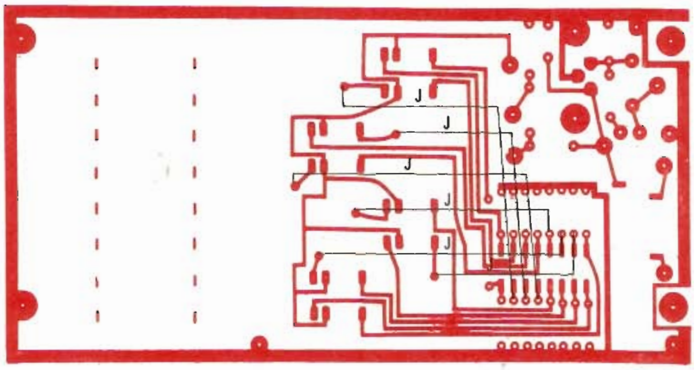

FIG. 9—RUN SIX JUMPERS between the zero-insertion-force test socket and the approriate pads on the component-side of the board.

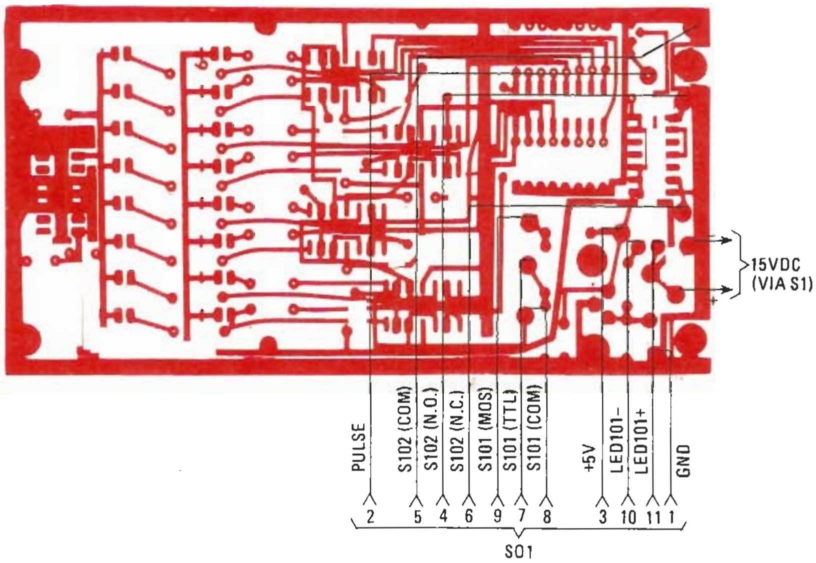

FIG. 10—MAKE UP AN 11-WIRE cable to connect SO1 to the circuit board at the points shown.

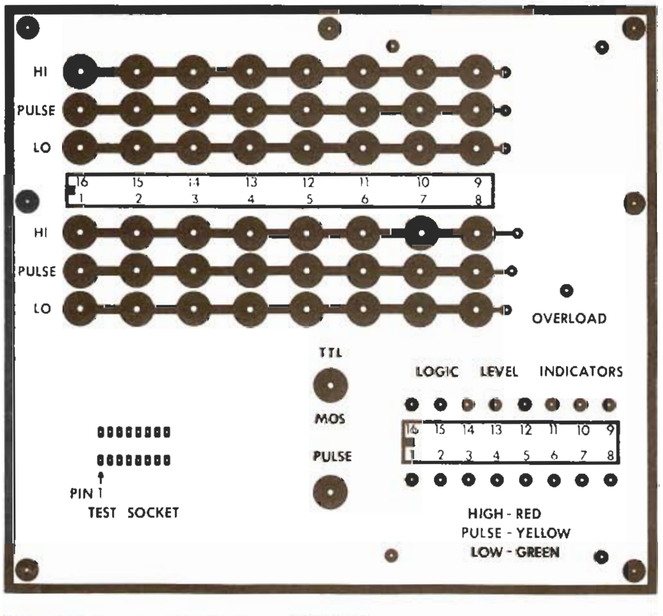

FIG. 11—TOP OF PANEL BOARD. Drill out holes at large foil pads as described in text.

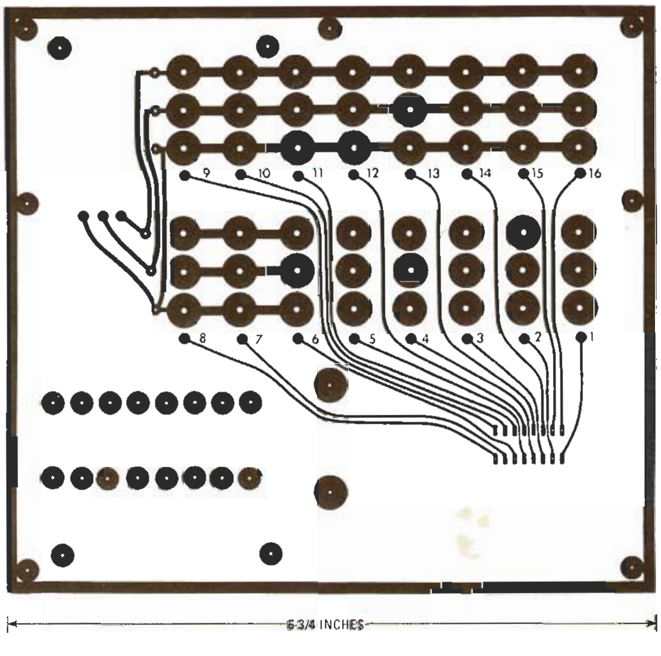

FIG. 12—FOIL SIDE OF panel board. Holes for 16 LED's are at lower left.

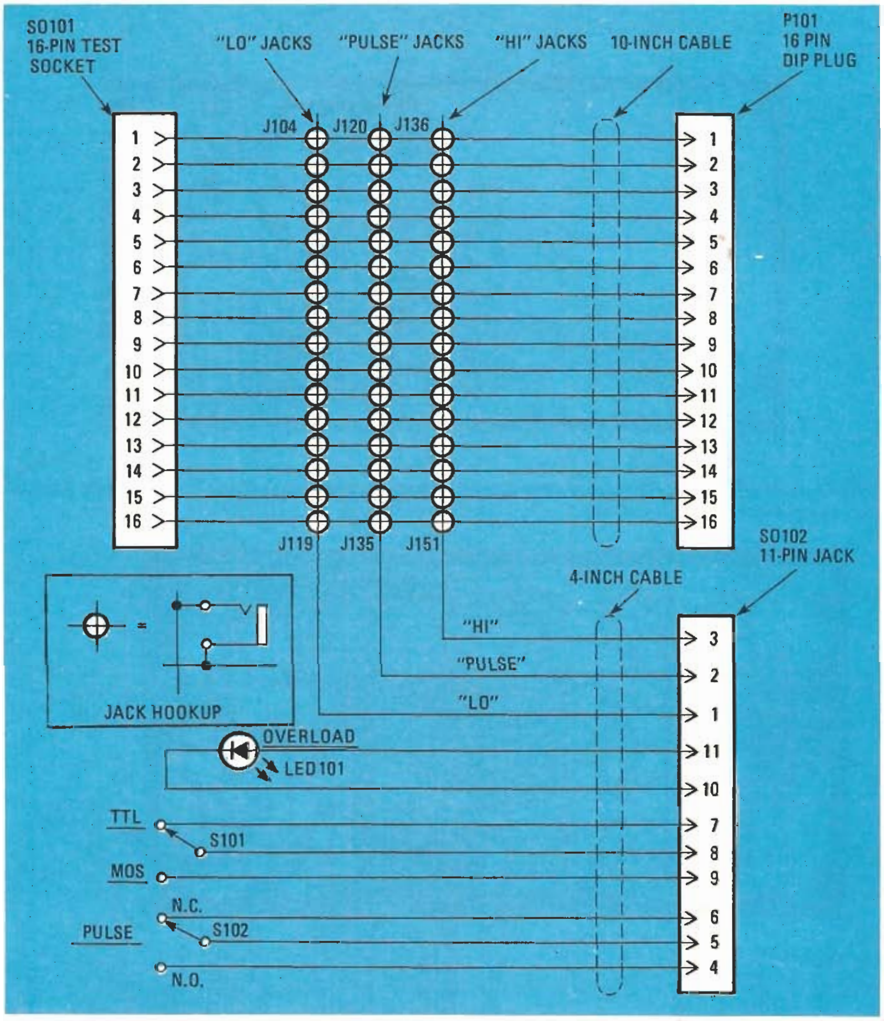

FIG. 13—PANEL BOARD SCHEMATIC shows jack array J104–J151. Inset shows how jacks are connected. Note that switch S102 is actually an SPDT pushbutton type.

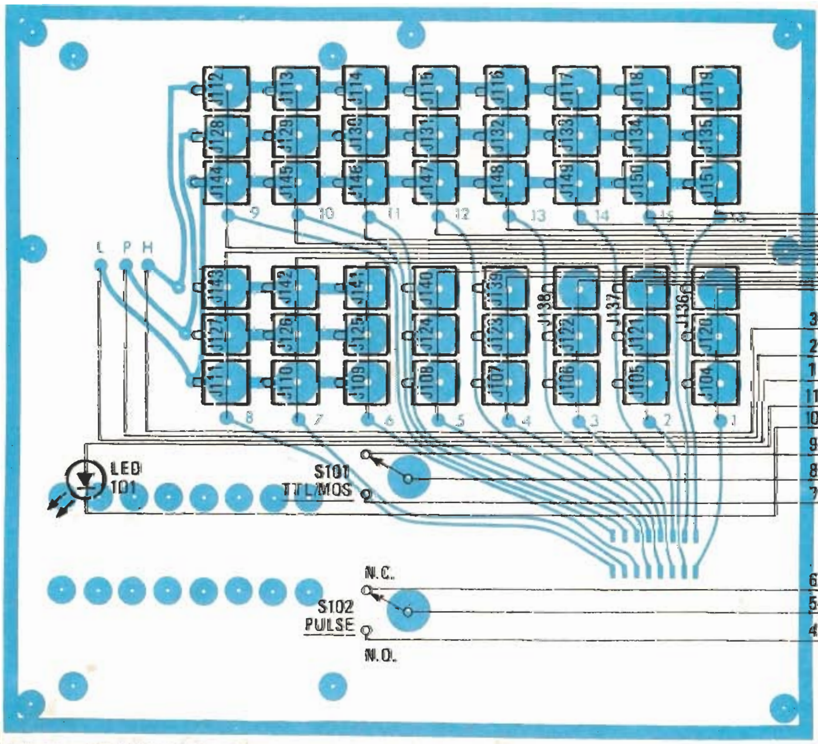

FIG. 14—CENTER PINS of the HI, LO, and PULSE jacks for each IC pin are bused together. No wires are connected to ground lugs.

## OOOOOOOPS

**The center jumper in Fig. 5 of Part 1 was shown incorrectly. The correct portion of that parts-placement diagram is shown below.**

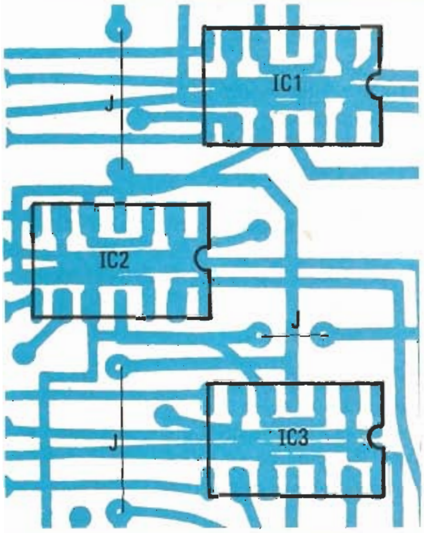

## PARTS LIST—PANEL BOARD

**Semiconductors**

LED101-jumbo red LED lamp

P101—16-pin DIP header with 10-inch (minimum) cable

P102—12 pin Molex nylon connector

S0101—16 pin ZIF (*Z*ero *I*nsertion *F*orce) socket (Welcon ZIF—16 or similar)

SO102—12-pin socket to mate with P102 from display board

J104–J151—miniature phone jack

J201—two-conductor polarized jack (a phone jack is OK)

S101—SPDT mini toggle switch

S102—SPDT mini pushbutton switch (push-on/push off)

S201—SPST toggle switch

**Miscellaneous:** cabinet, hookup wire, 4-40 hardware, ¾-inch threaded spacers, phone plugs, etc.

**The following is available from Technico Services, PO Box 20HC, Orangehurst, Fullerton, CA 92633: set of two etched & drilled PC boards (IC-1), $30.00. Available from ABC Electronics, 2033 W. La Habra Boulevard, La Habra, CA 90631 is a set of all parts, *excluding PC boards* (IC-1P), $85.00. CA residents please add sales tax; foreign orders please add $3.00 for postage & handling.**

piece of uninsulated bus wire. Connect the end of the wire to the pad below the "LO" jack. Then move to the pin-15 series of jacks, and connect them in the same manner. Keep going until all the jacks are tied together and connected to the appropriate pads on the PC board. Check your work carefully. It's very easy to make a mistake here. Watch for shorts, especially, and correct any errors you find.

When we continued this article, we'll finish up the panel-board wiring and complete the assembly. Then we'll make sure the tester operates properly. **R-E**

# Semiconductor Tester

**Check out your semiconductors with this cunning but simple project. It's brilliant, even if we do say so ourselves (and we do). Design by Rory Holmes. Development by Tony Alston.**

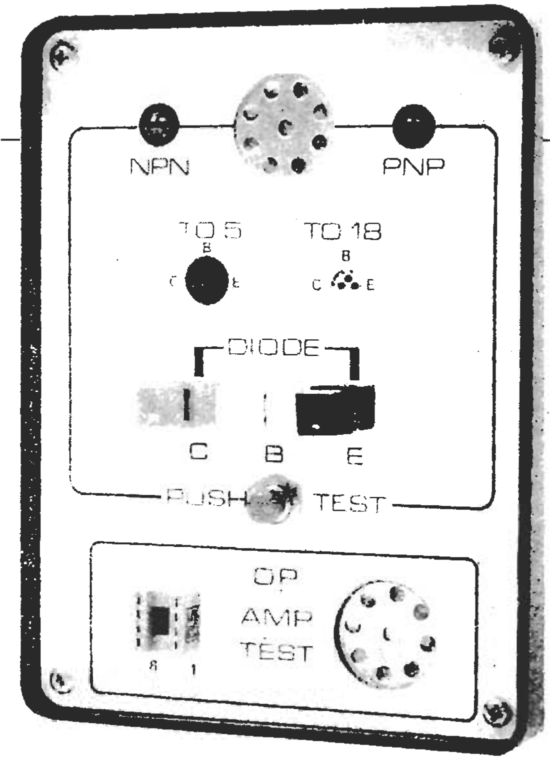

When you've completed your latest design, a brilliant project which not only solves the world energy crisis but proves that Einstein made a small mathematical error as well, it can be very frustrating if you rush to your junk box and discover that you can't breadboard the circuit because the markings have rubbed off your transistors. To help with this problem we've come up with our latest design, a brilliant project which tells you which lead is which, whether the transistor is OK, what polarity it is and its approximate gain. Diodes and LEDs may also be tested, and for good measure we've thrown in an op-amp checker. The world energy crisis you'll have to figure out for yourself.

## Construction

Assembly is straightforward if the recommended PCB is used. Make sure to orientate IC1, IC2, D1 and D2 correctly and use sockets for the ICs to avoid damage by soldering them. Remember to put the three wire links on the PCB!

Although there are quite a few off-board connecting wires, these should not be a problem if the circuit diagram, overlay and internal photos are studied carefully. Only one transistor test socket is shown on the circuit diagram but several types can be wired in parallel (as we did) to accommodate various types of transistors. The T0-5 and T0-18 types were epoxied to the front panel, as was the eight-pin DIP socket for the op-amp tester. Three insulated test terminals were also included for testing other types of transistors, diodes and LEDs.

TX1 and TX2 are crystal mike inserts. Warning; most inserts have one terminal connected to their case and as we've used a metal front panel for this project, TX2 should be insulted from this panel. Otherwise, TX1 and TX2 will be common linked and as the circuit diagram shows that TX1 is connected to 0V, TX2's connection to IC1, IC2 and C2 will be incorrectly taken to 0V. We got round the problem when we glued a circular fibre washer to one insert before fixing it to the front panel.

## Testing Times

Transistors are plugged into the appropriate socket, and any type may be tested; NPN, PNP, small signal or

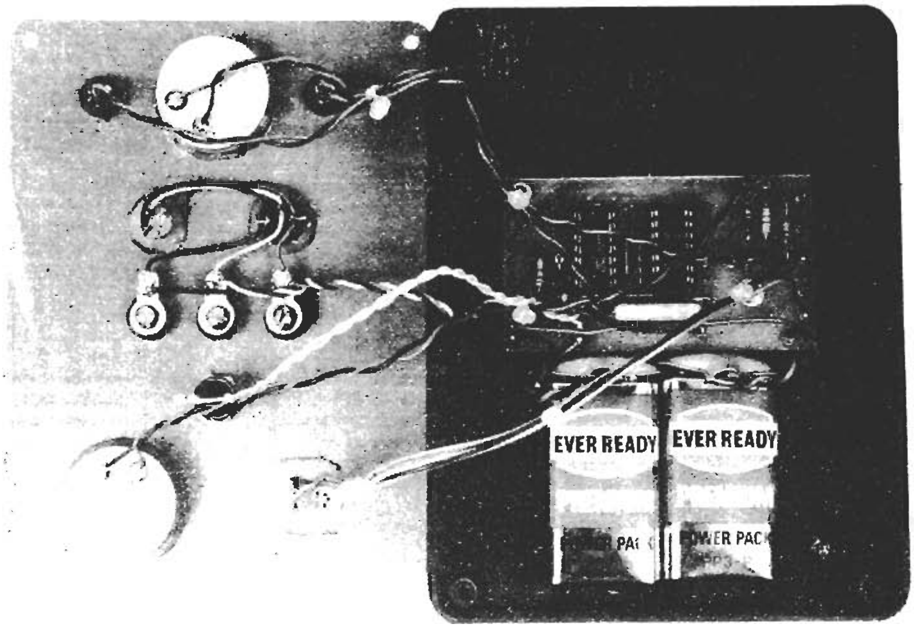

power. No selection of NPN or PNP is necessary as this is done automatically by the tester. When the push-to-test button is pressed, an intermittent tone is produced. The frequency of the tone is proportional to the gain of the transistor, giving a rough guide. The LEDs also flash alternately in time with the pulsing tone; the LED that is on at the same time as the tone indicates the polarity of the transistor. If the transistor has no gain or is open circuit there will be no tone, although the LEDs will still flash. If the transistor has a large leakage current or is shorted, there will be a 'two-tone' sound. If the transistor has been inserted the wrong way there will be either no tone or a very high-pitched tone.

Diodes and LEDs may be tested across the 'C' and 'E' terminals. If it is OK, the LED under test will flash, accompanied by an intermittent high-pitched tone and flashing indicators. Ordinary diodes require a series resistor (any old value) and should then produce an intermittent tone and flashing LEDs as before; the coincidence of flashing LED and tone indicates the anode.

Op-amps are plugged into the IC socket and no push-switch is required; power is only applied when the IC is inserted, and a good IC produces a continuous tone from the second insert

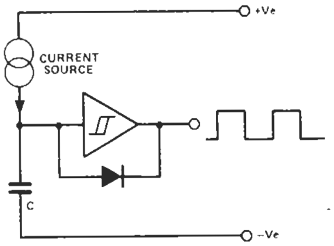

**Fig. 2 Principle of the CCO.**

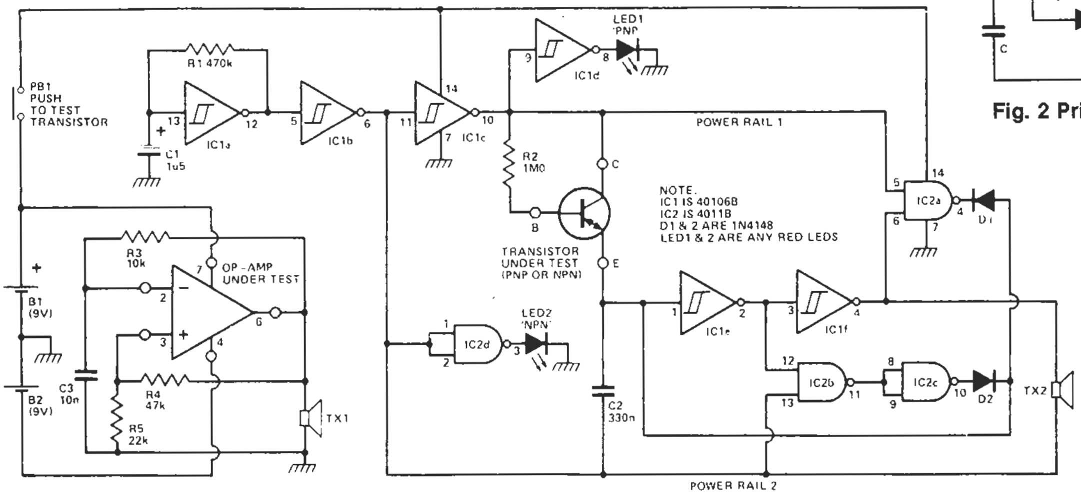

**Fig. 1 Circuit diagram of the Component Tester.**

## PARTS LIST

**Resistors (all ¼W, 5%)**

| | |
|---|---|
| R1 | 470k |
| R2 | 1M0 |
| R3 | 10k |
| R4 | 47k |
| R5 | 22k |

**Capacitors**

| | |
|---|---|
| C1 | 1u5 25V tantalum |
| C2 | 10n disc ceramic |
| C3 | 330n polyester |

**Semiconductors**

| | |
|---|---|
| IC1 | 40106B |
| IC2 | 4011B |
| D1,2 | 1N4148 |
| LED1 | 0.2" red LED |
| LED2 | 0.2" green LED |

**Miscellaneous**

| | |
|---|---|
| PB1 | momentary push-button |
| TX1,2 | crystal mike inserts |

2 9V batteries and clips; transistor sockets; IC sockets; case to suit.

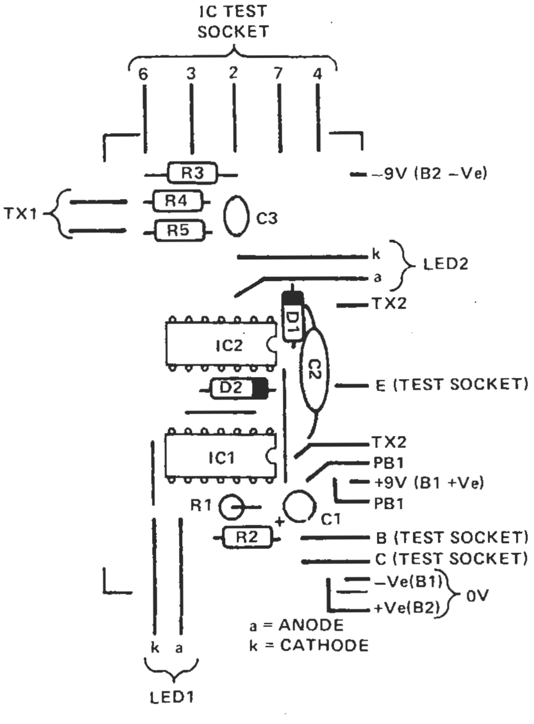

**Fig. 3 Component overlay.**

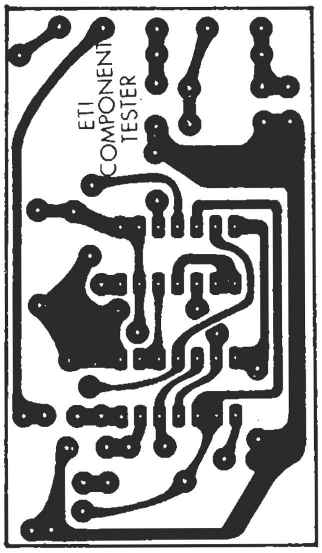

*Continued on page 42*

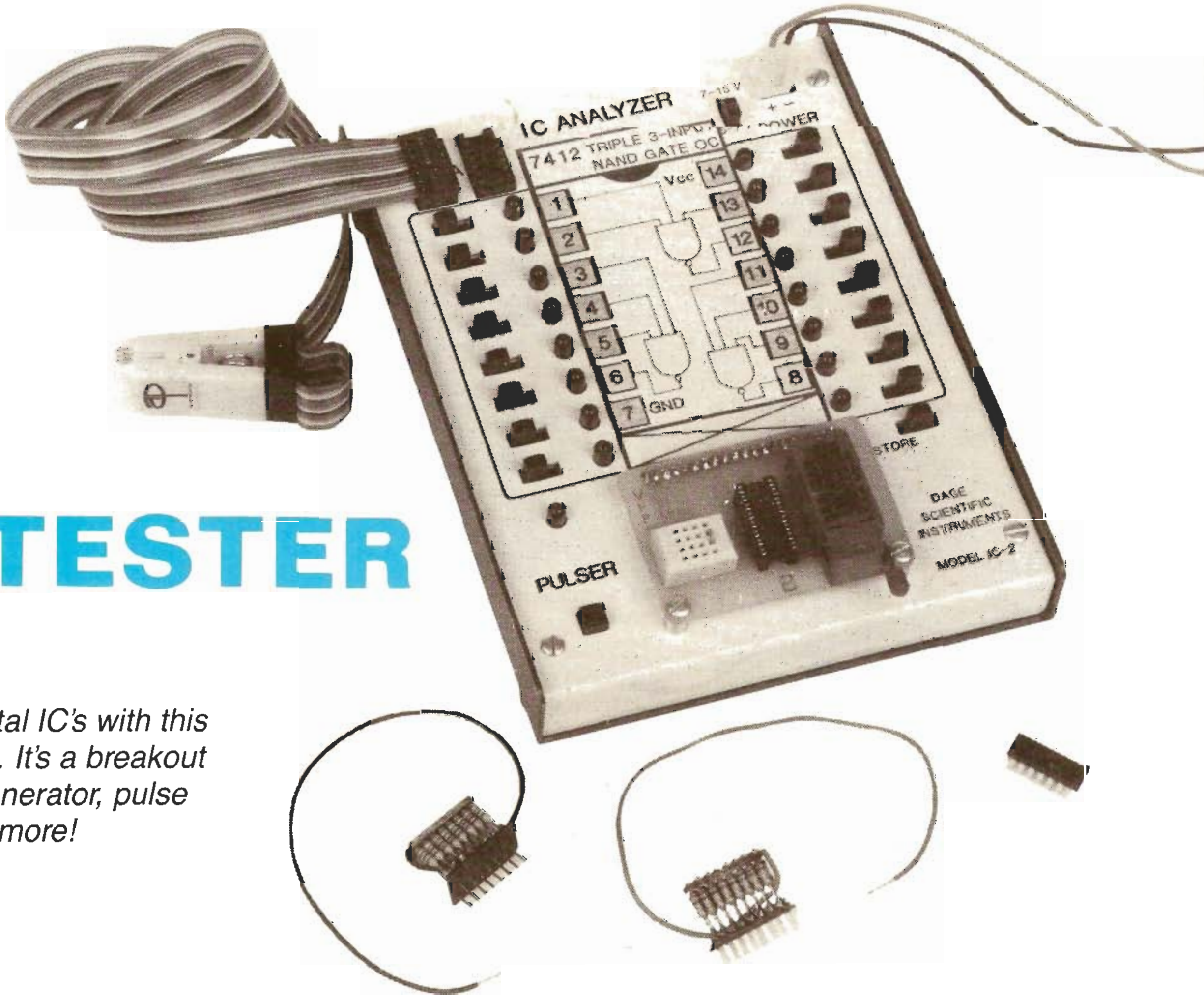

# IC TESTER

**DAVID H. DAGE**

*Test your digital IC's with this handy device. It's a breakout box, pulse generator, pulse detector and more!*

TESTING DIGITAL CIRCUITS SHOULD BE easy. After all, there are only two voltage levels involved. If the signal isn't high, then it's low. So your voltmeter or oscilloscope should be all that you need, right? How wrong that is! Working with digital circuits requires a whole new generation of test instruments ranging from the indispensable logic probe up to the sophisticated logic analyzers and emulators.

We'll show you how to build a device that's several digital test instruments rolled into one. It's a monitor, breakout box, comparator, pulse generator, and pulse detector. It can be used to troubleshoot digital circuits that contain 14- and 16-pin TTL or CMOS IC's. And it makes a great IC tester and trainer.

To use the analyzer for troubleshooting your digital circuits, you connect the analyzer to the in-circuit IC using ribbon cable and an IC test clip. If the analyzer is being used as a monitor, the logic level of each pin is displayed by an LED right next to a pictorial pinout of the IC. Each pin of the IC is accessible at the analyzer for signal injection or simply for observation. That combination is hard to beat—it's certainly better than tilting your head, holding a databook open with your elbow, and jabbing spasmodically with a logic probe on what may very well be pin 10.

The analyzer gives you a remarkably simple way to troubleshoot an in-circuit IC. You can compare the outputs of the IC operating in-circuit to an IC of the same type that you know to be good. The good IC is inserted in the analyzer, and the power and input pins are connected together using slide switches, while the outputs are compared using EXCLUSIVE OR (XOR) gates. If the LED's remain off, the in-circuit IC is good. It's as simple as that.

The analyzer can also be used to check IC's before installation. Slide switches are used to set logic levels on appropriate pins, while the built-in pulse generator is used to inject single or multiple pulses.

## A look at the circuit

The IC analyzer is made up of four main parts: the power feed, a pulse generator, a pulse stretcher, and a set of 16 pin-monitor circuits. To explain the circuit operation as clearly as possible, we will discuss those sections separately.

The schematic of the power feed is shown in Fig. 1. When testing in-circuit IC's, the analyzer gets it power from the circuit under test, through socket SO6. If that input voltage is higher than seven volts, S18 must be switched to supply 5

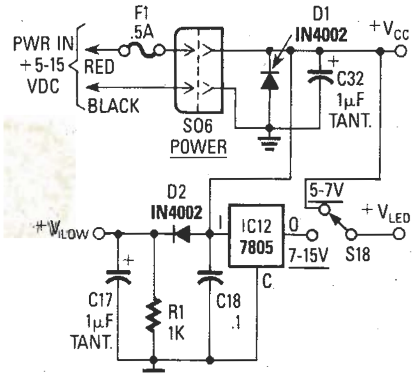

FIG. 1—A POWER-DISTRIBUTION CIRCUIT is used so that the LED's can have their own supply voltage if necessary.

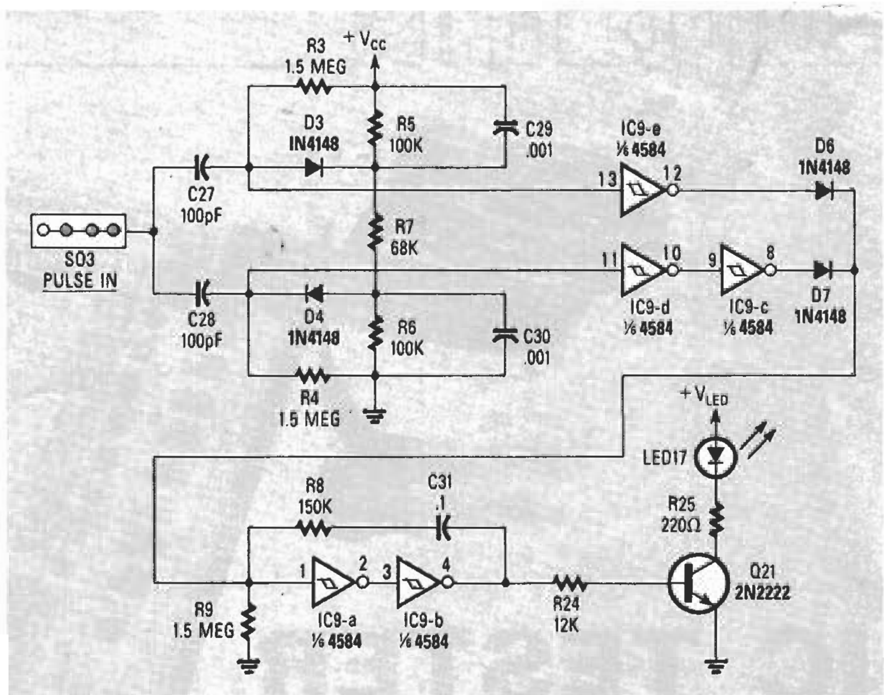

**FIG. 5—SCHEMATIC OF THE PULSE STRETCHER. LED17 will light on both positive and negative transitions.**

volts to the LED's. Otherwise, the current through them will be too high.

Supply voltage $V_{LOW}$ is 0.8 volt less than $V_{CC}$ and powers the XOR gates and the flip-flops used for the individual pin-monitor circuits. The voltage is derived through D2 and is filtered by C17. This provides a high threshold voltage of 2.1 volts during 5-volt operation (which is necessary for TTL). The rest of the circuits operate between 5 and 15 volts DC.

A block diagram of the pin-monitor logic is shown in Fig. 2, while the schematic is shown in Fig. 3. Since the analyzer can be used to examine 16-pin IC's, it must contain 16 pin-monitor circuits. Instead of showing the circuit 16 times, we have shown it once and have used lettered subscripts. Although that is different from what we normally do in **Radio-Electronics**, it should serve to make the circuit clearer. When referring to those parts, we'll use an "N" subscript. In Fig. 3, of course, N = 1. (Since the XOR gate and S-R flip-flop are *sections* of IC's, we couldn't do that. So we'll mention here that the XOR gates in the pin-monitor circuits are contained in IC1, IC2, IC5, and IC6, while the S-R flip-flops are contained in IC3, IC4, IC7, and IC8.) Just keep it in mind when you go through the Parts List.

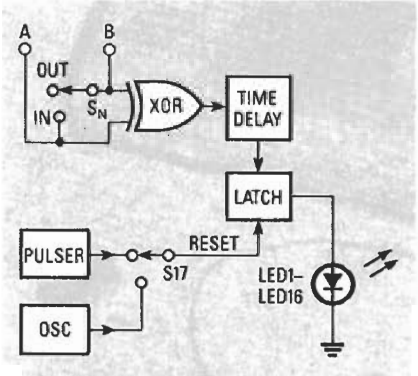

**FIG. 2—THE PIN-MONITOR CIRCUIT is shown here in a block diagram.**

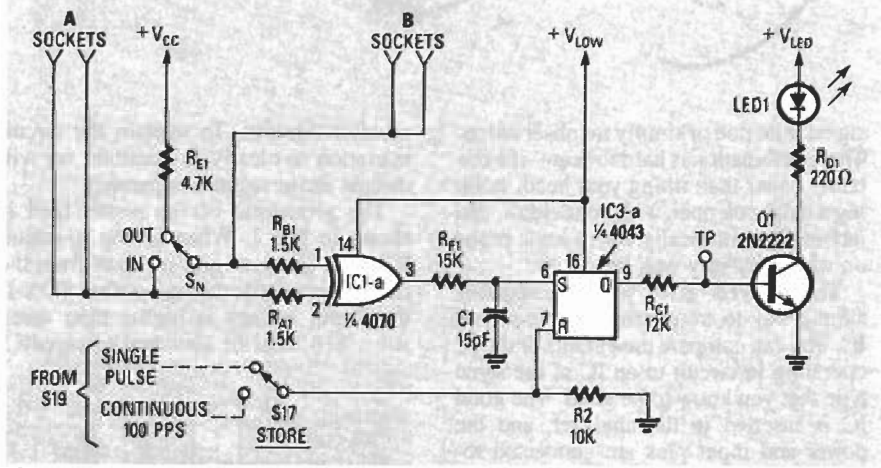

**FIG. 3—SCHEMATIC OF THE PIN MONITOR CIRCUIT. Note that because this circuit is repeated 16 times in the analyzer, the part numbers use lettered subscripts.**

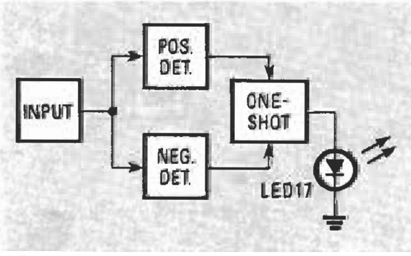

**FIG. 4—THE PULSE STRETCHER block diagram.**

When switch $S_N$ is in the OUT position, the logic level on pin $A_N$ is compared with logic level on pin $B_N$ by the EXCLUSIVE OR gate. If the two levels are different, the high output will set a 4043 flip-flop. Pulses less than 800 ns are considered glitches and are filtered out by $R_{FN}$ and $C_N$.

A high output from the 4043 flip-flop will turn on transistor $Q_N$, and thus the LED. Resistors $R_{AN}$ and $R_{BN}$ isolate and protect the analyzer circuits while $R_{CN}$ and $R_{DN}$ limit current flow.

When switch S17 is in the STORE position, the flip-flop can be reset manually using the PULSER switch, S19. When S17 is not in the STORE position, the flip-flop is continually reset by a 100-pps pulse train.

Placing $S_N$ to the IN position, connects pin $A_N$ to pin $B_N$, so that an in-circuit IC can be compared to an out-of-circuit test IC.

The analyzer has a built in *pulse stretcher* and *pulse generator*. Both of those functions can be connected independently to any pin on the IC under test. The pulse stretcher will allow a single pulse or a fast pulse train can be caught and displayed on a separate LED. It is highly sensitive to true logic changes but is immune to low-level noise.

A block diagram of the pulse stretcher is shown in Fig. 4, and its schematic is shown in Fig. 5. As you can see, it uses five of the Schmitt-trigger inverters of IC9. The DC level on the input pins 13 and 11 of that IC is held midway between the switching point by R3 through R7, and diodes D3 and D4.

A negative transition discharges C27 and pulls pin 13 low. The capacitor is then charged through R3 until D3 conducts. The time constant of R3 and C27 coupled to the Schmitt trigger, produces a positive pulse of sufficient duration to then trigger the monostable flip-flop made up of R8, R9, C31 and two inverters, IC9-a and IC9-b. When triggered, output from pin 4 of IC9 will go and remain high for approx-

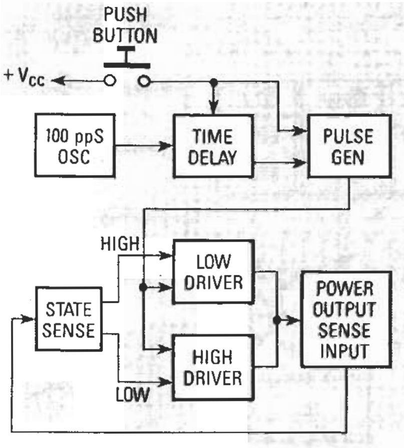

FIG. 6—THE PULSE GENERATOR block diagram.

imately 50 ms. This output drives the LED17.

Positive transitions charge C28 and pulls pin 11 of IC9 high. An output blink of LED17 is produced in a similar fashion. Capacitors C29 and C30 hold the midway reference voltage constant, while diodes D6 and D7 isolate the two outputs from pin 8 and pin 12 of IC9.

The pulse generator can be used to change the logic level voltage to the opposite state for a short time, overriding any logic output that is in control. Injecting pulse(s) to stimulate digital circuitry is indispensable for troubleshooting. The duration of the pulse is so short that no damage is done to the output device. The pulse output can be either a single pulse of a 100 pps (*P*ulse-*Per*-*S*econd) pulse train.

A block diagram of the pulse generator is shown in Fig. 6, while its schematic is shown in Fig. 7. The logic level of the external circuit is sensed through R16, and is fed to the DATA input of flip-flop IC10-b. When switch S19 is pushed, a single positive pulse is generated by C19 and R13, setting flip-flop IC10-a.

A multivibrator that generates a 100-pps squarewave is made up of R10, C21, and IC9-f, a Schmitt-trigger inverter. The squarewave is fed to AND gate IC11-c. If S19 is held closed, C20 charges thru R12 and, after about 2 seconds, turns on IC11-c. That allows flip-flop IC10-a to be clocked as long as S19 is pushed. When S19 is released, C20 rapidly discharges thru D5 and R11. Flip-flop IC10-a resets

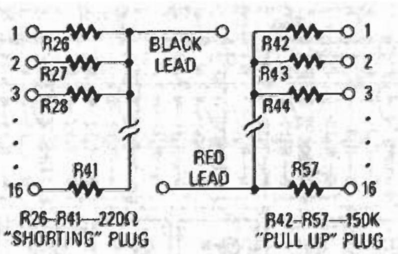

FIG. 8—THE PULL-UP AND SHORTING PLUGS are shown here schematically.

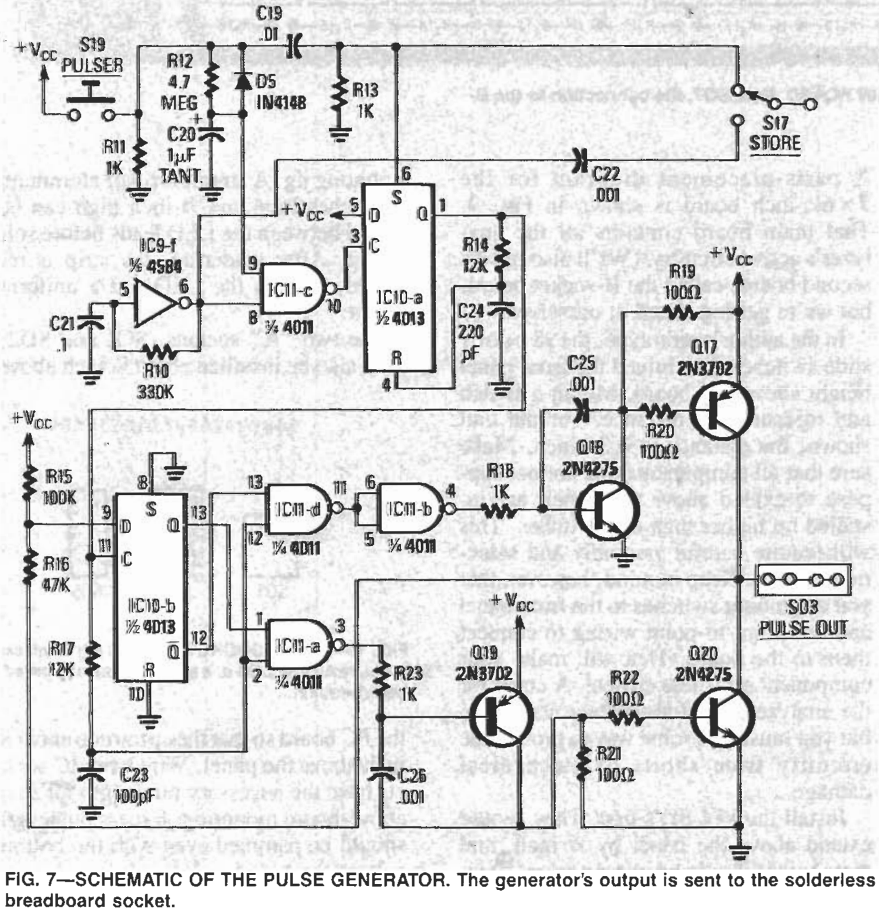

FIG. 7—SCHEMATIC OF THE PULSE GENERATOR. The generator's output is sent to the solderless breadboard socket.

## PARTS LIST

**All resistors ¼-watt, 5%**

$R_{A1}$–$R_{A16}$, $R_{B1}$–$R_{B16}$—1500 ohms
$R_{C1}$–$R_{C16}$—12,000 ohms
$R_{D1}$–$R_{D16}$—220 ohms
$R_{E1}$–$R_{E16}$—4700 ohms
$R_{F1}$–$R_{F16}$—15,000 ohms
R1, R11, R13, R18, R23—1000 ohms
R2—10,000 ohms
R3, R4, R9—1.5 megohms
R5, R6, R15—100,000 ohms
R7—68,000 ohms
R8, R42–R57—150,000 ohms
R10—330,000 ohms
R12—4.7 megohms
R14, R17, R24—12,000 ohms
R16—47,000 ohms
R17—12,000 ohms
R19–R22—100 ohms
R25, R26–R41—220 ohms

**Capacitors**

$C_{A1}$–$C_{A16}$—15 pF, ceramic disc
C17, C20, C32—1.0 µF, 25 volts, tantalum
C18, C21, C31—0.1 ceramic disc
C19—0.01 ceramic disc
C22, C25-C26, C29, C30—0.001 µF, ceramic disc
C23, C27, C28—100 pF ceramic disc
C24—220 pF polystyrene

**Semiconductors**

IC1,IC2, IC5, IC6—4070 quad EXCLUSIVE OR gate
IC3-IC4, IC7, IC8—4043 quad 3-state latches
IC9—4584 Hex Schmitt trigger inverters
IC10—4013 dual D-type flip-flop
IC11—4011 quad NAND gate
IC12—7805 5-volt regulator (TO-220 case)
Q1–Q16, Q21—2N2222
Q17, Q19—2N3702
Q18, Q20—2N4275
D1, D2—1N4002
D3–D7—1N4148
LED1–LED17—standard red LED

**Other components**

S1-S18—SPDT slide switches
S19—Pushbutton switch, normally open
SO1, SO2, SO4—wirewrap type, 16-pin DIP sockets
SO3—Solderless breadboard strip (4 × 4)
SO5—ZIF socket
SO6—2-pin power connector
SO7—20-pin single-row female header

**Miscellaneous:** Main PC board; B-socket PC board; IC sockets, cabinet, DIP headers for plugs, etc.

**The following are available from Dage Scientific Instruments, P.O. Box 144, Valley Springs, CA 95252: Plated-thru PC boards, IC pin-out cards and detailed instructions (order number IC-18), $30.00 plus $2.00 shipping. Complete kit of parts less chassis, DIP-clip cable, and sockets (order number IC-20), $79.95 plus $3.00 shipping. Complete kit, includes assembled dip-clip cable, zero insertion force socket, even solder (order number IC-22), $119.00 plus $4.00 shipping. California residents please add sales tax. Countries other than U.S.A. and Canada, please add $8.00.**

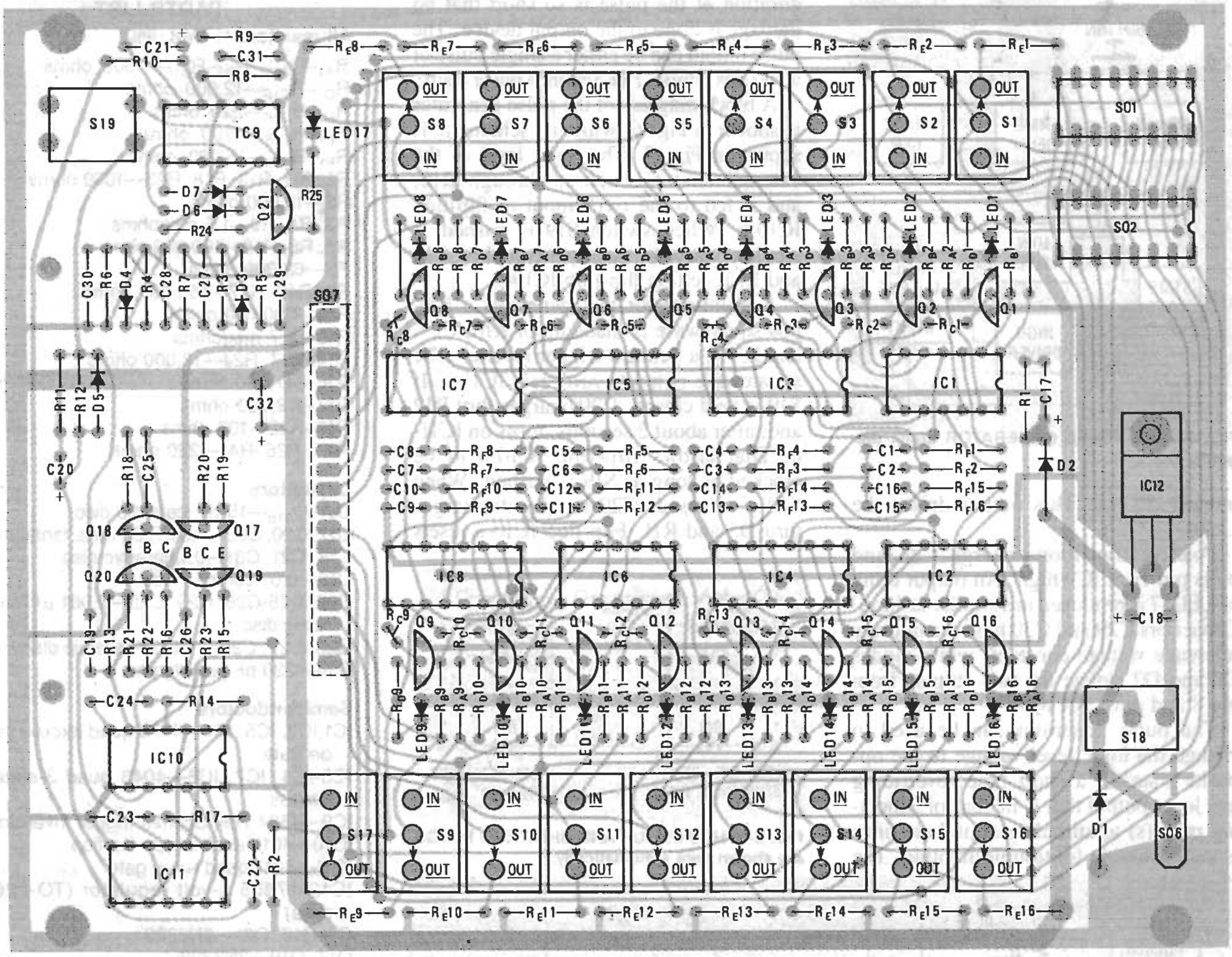

FIG. 9—PARTS PLACEMENT DIAGRAM FOR THE MAIN BOARD. Note SO7, the connection to the B-socket board.

itself by R14 and C24 producing a positive pulse of a few microseconds. That positive pulse latches the external circuit level sensed by IC10-b and, after a slight delay produced by R17 and C23, drives NAND gates IC11-a and IC11-d

If the external circuit is high, the Q output of IC10-b will be high allowing IC11-a to turn on the negative-drive circuit containing Q19 and Q20. Conversely, if the external circuit is low, $\overline{Q}$ will be high which will turn on gates IC11-d and IC11-b, and then the positive drive circuits containing Q17 and Q18.

The final part of the analyzer's circuit are two plugs, each of which contains 16 identical resistors mounted on a header with all resistors connected to a common lead. The "shorting" plug uses 220 ohm resistors while the "pull-up" plug uses 150K resistors. The schematics of the plugs are shown in Fig. 8.

## Building the IC analyzer

The easiest way to build the analyzer is to use printed-circuit boards. See our new "PC Service" section starting on page 81 for foil patterns for a double sided board. A parts-placement diagram for the 5 × 6½-inch board is shown in Fig. 9. That main board contains all the analyzer's active circuitry. (We'll also need a second board, called the B-socket board, but we're getting ahead of ourselves.)

In the author's prototype, the 18 IN/OUT slide switches determined the front panel height above this board. Mount a switch and measure this distance. For the unit shown, the distance is 0.35 inch. Make sure that all components that are not suppose to extend above the panel, are installed no higher than the switches. This will require careful assembly and selection of parts. Keep in mind, however, that you can mount switches to the front panel and use point-to-point wiring to connect them to the board. That will make your component sizes less critical. A cover for the analyzer is not absolutely necessary, but you must find some way to protect the circuitry from shorts or mechanical damage.

Install the 17 LED's first. They should extend above the panel by ⅛ inch, and their height should be as even as possible. That can be accomplished by making a mounting jig. A simple strip of aluminum 3¼ inches long and ¼ inch high can be placed between the LED leads before soldering. After soldering, the strip is removed, leaving the LED's at a uniform height.

The two "A" sockets, SO1 and SO2, must also be installed about ¼ inch above the PC board so that they protrude about ⅛ inch above the panel. Wire wrap IC sockets have the necessary pin length for such above-board mounting. Excess pin length should be trimmed even with the bottom side of the board.

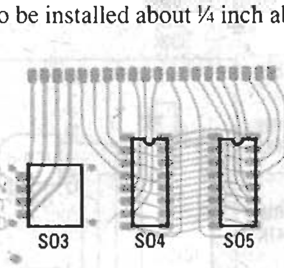

FIG. 10—THE B-SOCKET BOARD parts placement. Note that SO3 is a small solderless breadboard socket.

*continued on page 101*

## IC TESTER

*continued from page 62*

All of the resistors are mounted horizontally on 0.4-inch centers except for $R_{C1}$ to $R_{C16}$. Mount those resistors vertically with the resistor body down and the bare lead toward the top of the board. (The bare lead will be used as a test point for checking the LED circuitry.) Be sure that the resistors do not extend high enough to touch the top panel when installed. The finished PC board should look something like that shown in Fig. 9.

A second PC board, the B-socket board, contains a small solderless breadboard socket (SO3), a standard 16 pin DIP socket (SO4), and a zero-insertion-force or ZIF socket (SO5). It sits above the main board and the cabinet top and mates to the main board with a 20-pin connector. The foil patterns for that double-sided board are shown in our special "PC Service" section, and the parts-placement diagram is shown in Fig. 10.

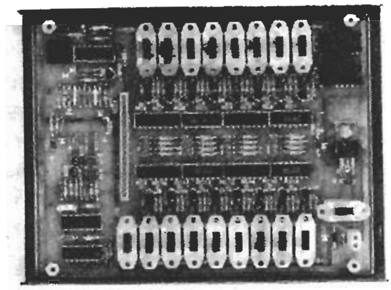

**FIG. 11—YOUR FINISHED MAIN BOARD should look like this before you install a top cover.**

The 16-pin resistor plugs can be assembled by using a standard 16 pin header as shown in Fig. 11. The common connection can be made with a tiny PC board or simply by tying the leads together. The shorting plug uses 220-ohm resistors while the pull-up plug uses 150K resistors.

Power is supplied from the circuit under test using a 2-pin connector with leads, mini clips and an in-line fuse. Connection to the IC under test is via an IC test clip, which we'll call a DIP clip. The plugs, DIP clip, and power connector are shown in Fig. 11.

### Circuit checkout

Before applying power, check over the entire assembly for solder bridging, poor solder connections or missing solder points. Verify that all 11 DIP IC's are oriented with pin 1 up toward the top of the board. Check all LED's and transistors for polarity, and correct any mistakes now.

Mount the main PC board on the bottom chassis, but don't install the top cover until we're done testing. Plug the small PC board into the main board (through SO6) and place all of the IN/OUT slide switches to the OUT position (toward the outside). Put the power switch in the 5–7-volt position and apply 5 volts from a regulated external DC source.

**To check the pulse detector**, connect a 1K resistor between the pulse input (PULSE IN) and $V_{CC}$ on the solderless connector, SO3. Short PULSE IN to ground with a wire lead. The pulser LED must blink each time the short is made or broken. That verifies that either a rising or falling edge will trigger the pulse detector. Remove the resistor and lead.

Immediately to the left of the solderless connector is IC9. Connect pin 6, a square wave output, to PULSE IN using a short piece of wire. The pulser LED should pulse on and off rapidly. Remove the wire. If you have a pulse generator, feed a 25-ns pulse to PULSE IN. The pulser LED should blink for each pulse. Do that with both positive- and negative-going pulses.

**To check the output pulser**, use a short length of wire to connect PULSE OUT to PULSE IN on the solderless connector. Then connect a 22-ohm resistor from PULSE OUT to $V_{CC}$. When you momentarily press the pulser button, the pulser LED (LED17) should blink. Next, connect the 22-ohm resistor from PULSE OUT to ground. Once that is done, when you momentarily press the pulser button, the LED17 should blink. Depress and hold the pulser button again. In about 2 seconds the pulser LED should start and keep pulsing on as long as the button is depressed. Remove jumper and resistor.

**To check the individual pin logic**, insert the 220-ohm shorting plug into one of the A sockets (SO1 or SO2) and connect its common lead to ground. Place the STORE switch to the not-stored position, and cycle each of the individual pin slide switches to verify that the corresponding LED is on when the switch is in the OUT position and off when in the IN position. If an LED does not perform properly, a simple check can determine if the LED and drive transistor are working.

The test is done as follows. To turn off the LED, connect one end of a 1K resistor to ground. With a clip lead or jumper wire, connect the free end of the resistor to the top of $R_{CN}$. ($R_{CN}$ is the vertically mounted resistor; there's one for each pin). To turn on an LED, connect one end of a 1K resistor to $V_{CC}$ and repeat the above.

**To check the STORE function**, place the STORE switch to the STORE position. Turn each LED on by placing its switch to the OUT position, then place all IC switches to the IN position. The LED's should remain on until either the store switch is moved "out" or the pulser is pulsed.

Do not continue if the analyzer is not operating as described. Correct any problems before you go on. Next time, we'll see how to use the analyzer. **R-E**

# PC SERVICE

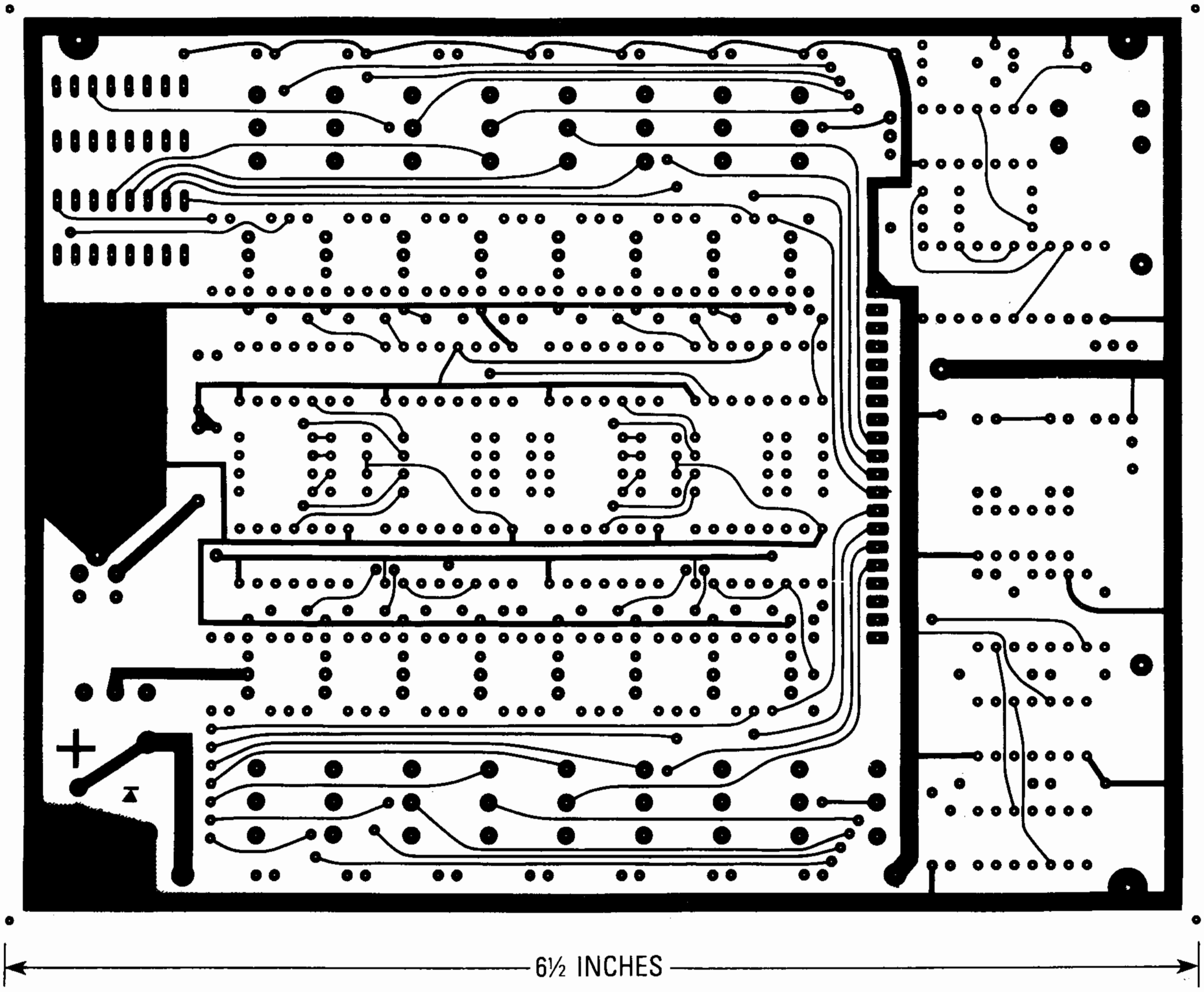

**THE COMPONENT SIDE OF THE IC-TESTER BOARD** is shown here as a full-sized mirror image. The solder side will appear here next month.

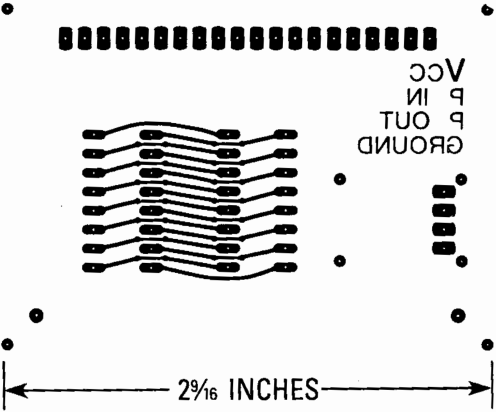

**THE COMPONENT SIDE OF THE "B-SOCKET"** board for the IC tester is shown here in a full-size mirror image.

mirror

# Matching complementary pairs

This circuit allows the accurate matching of power complementary pairs without any danger of failure. Adequate values of $R_1$, $R_2$, $R_3$ and $R_4$ are necessary to limit the collector currents. By balancing $R_1$ $R_2$, equal currents through the transistors are achieved when there is zero indication on $M_2$. At this point

$$\frac{h_{FE1}}{h_{FE2}}=\frac{R_1}{R_2}$$

As an alternative, the circuit can be used to measure the $h_{FE}$ of a certain transistor comparatively with a known one. Adequate accuracy can be obtained with a linear precision potentiometer, and equal voltages in the two halves of the secondary winding.

Safta Ion,
Romania.

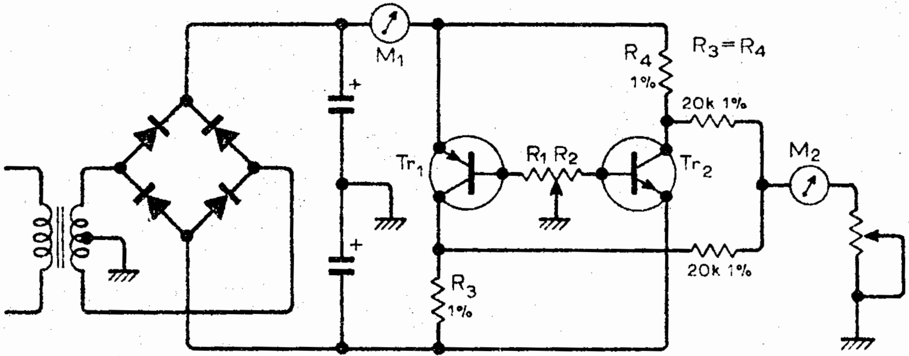

## TEST TRANSISTOR CURRENT GAIN

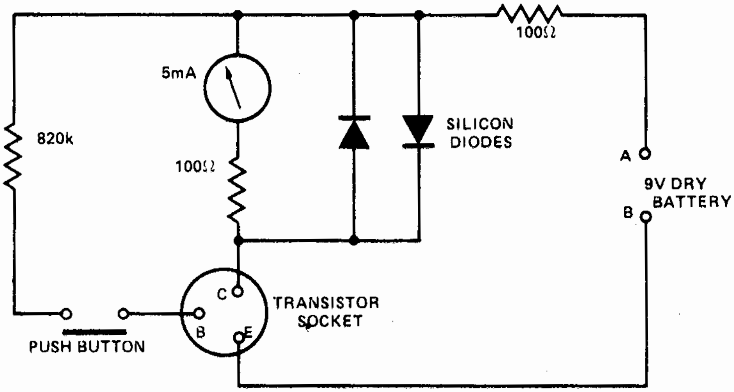

A reasonable estimate of current gain can be obtained from the above circuit. Before the button is pressed, the meter should give negligible deflection. Closing the contacts gives approximately 10$\mu$A to the base of the transistor, so every mA indicated by the meter has to be multiplied by 100 to obtain the current gain. The resistors and diodes are to protect the meter in the event of a short circuit transistor being tested.

For NPN transistors, A & B should be + & − whilst for PNP, A & B should be − & +. The meter also needs to be reversed with the change of polarity.

The changeover for both meter and battery could be carried out with a two-way, four pole switch.

### TESTING SEQUENTIAL IC'S

The "Digital IC Tester" (June 1977) may operate satisfactorily when combinational logic such as AND gates and BCD-to-decimal devices are tested, but it will not do a good job when testing sequential circuits like latches and counters. As an example, the 7490 decade counter shown in the article is made up of three JK flip-flops and one SR flip-flop. The set input of the last flip-flop will never be tested. Because the reset to zero and gate are conditioned before every fourth clock pulse at pin 1, inputs S1 and S2 will never both be high when the clock is applied to the toggle inputs of the SR flip-flop. Since the set input is never tested, it may be defective, but the IC would still pass the test.—*Richard Bipes, Rochester, MN*

*Your statements would be basically correct—if the 7490 were connected only as shown in the example in the article. However, the jumpers on the setup matrix can be arranged to test of any part of a digital IC.*

# ASK R-E

**WRITE TO:**

ASK R-E
Radio-Electronics
500-B Bi-County Blvd.
Farmingdale, NY 11735

## SORTING ZENER DIODES

**I purchased a grab-bag of dozens of unmarked Zener diodes. Is there a circuit that I can use to measure their Zener voltages safely?—C. W. L., Bradenton, FL.**

Yes. But let's take a step back and review the basic characteristics of Zener diodes first.

Shown in Fig. 1 is the voltage-current characteristic curve of a Zener diode. When the diode is forward-biased past the 0.6-volt barrier potential, it has a low resistance, so a considerable amount of current can flow.

However, when the applied voltage is reversed, the junction's reverse resistance is very high initially, so current is very low—in the microampere range. As the voltage across the diode increases to a specific and critical value, $V_Z$, the normally high junction resistance drops to a very low value, and diode current increases considerably. The Zener voltage, $V_Z$, remains constant as the applied voltage increases; it is the latter characteristic that makes the Zener diode useful as a voltage regulator.

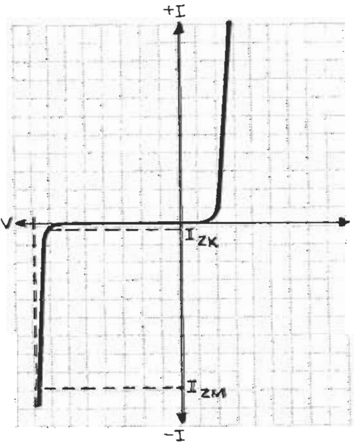

FIG. 1

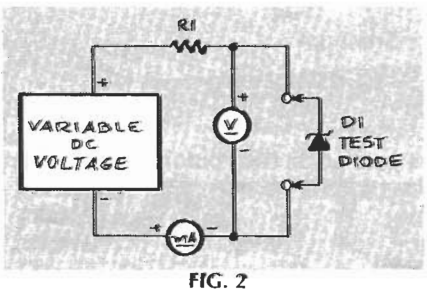

FIG. 2

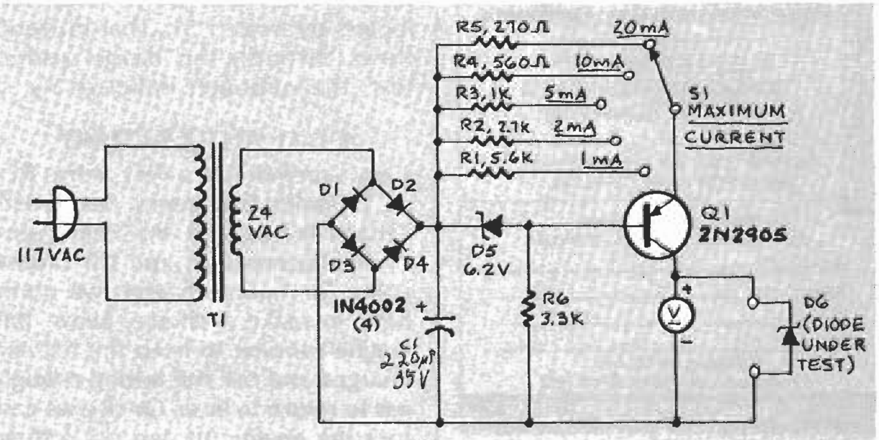

FIG. 3

The knee in the negative-going portion of the curve is the point where a small current flows just before the onset of avalanche current. That holding current, $I_{ZK}$, is considered the minimum current that must be maintained when a Zener diode is being used as a voltage regulator. The maximum Zener current, $I_{ZM}$, is limited by junction temperature and by the maximum power that the device can dissipate. Both $I_{ZK}$ and $I_{ZM}$ are given in manufacturers' data sheets. When current is maintained between those two points, $V_Z$ is constant. The value of $I_{ZK}$ is low; it's typically 0.25 mA for 1-watt diodes, 1.0 mA for 10-watt diodes, and 5 mA for 50-watt devices.

You can get Zener diodes that are rated from about 2 volts to 200 volts. The power-handling capacity of Zener diodes ranges from ¼ watt to 50 watts. With those ideas in mind, let's see how we can measure $V_Z$ of an unknown diode without exceeding $I_{ZM}$ and possibly destroying the diode.

Figure 2 shows the basic scheme for determining $V_Z$. The test circuit is powered by a variable DC source whose output is equal to or greater than the highest Zener voltage you expect to encounter. Resistor R1 should be selected to limit current to about ten mA at the highest voltage delivered by the power supply. The diode to be tested is connected across the DC source with its cathode connected to the positive terminal. The two meters allow you to monitor both voltage and current.

To find $V_Z$, start with the output of the power supply at zero volts. Gradually increase the voltage while monitoring the voltmeter. As the test voltage increases, the current meter will show little or no

SEE YOUR DEALER TODAY

FROM

'Firestik'®
·ANTENNAS·
·ACCESSORIES·

HERE'S A TIP
THAT'S PERFECT!

AM/FM AUTO RADIO
AND CB

'Firestik'® II

GOLDEN SERIES

BARE-HANDS TUNABLE
"NO TOOLS NEEDED"
HIGH PERFORMANCE ANTENNAS

ALSO ANTENNAS FOR
CORDLESS TELEPHONES
MONITOR SCANNERS

Dealer & Distributor Inquiries Invited
SEND FOR FREE CATALOG

'Firestik' Antenna Company
2614 East Adams/Phoenix, AZ 85034

Name ____________
Street ____________
City ____________
State ________ Zip ________

Serving the CB and
Communications Market Since 1962.

5-YEAR REPLACEMENT WARRANTY

CIRCLE 100 ON FREE INFORMATION CARD

current flow. But when the voltage approaches the avalanche level, current will increase, and voltage will stabilize. After that point, current will increase drastically, and voltage will remain constant. The constant voltage is $V_Z$.

A more versatile circuit is shown in Fig. 3. That circuit works only with Zener diodes rated at less than about 25 volts. The circuit works by using a 2N2905 PNP transistor as a constant-current generator whose output impedance is determined by feedback current through the emitter resistor selected by switch S1. That current flows through the diode under test; the voltmeter indicates $V_Z$.

## DUAL AUTO BATTERY

**I am a member of a very active REACT (*R*adio *E*mergency *A*ssociated *C*itizen *T*eams) unit. With emergency lights, monitor, and CB radios going for hours on end, we often have to make a choice. Leave the engine running to keep the battery charged and risk not having enough gas to return to base. Or else we can turn the engine off and risk letting the battery discharge too low to restart the engine. I've heard that some REACT groups use two batteries in their emergency vans and in their cars. How does that work?—G. McC., Palmetto, SC.**

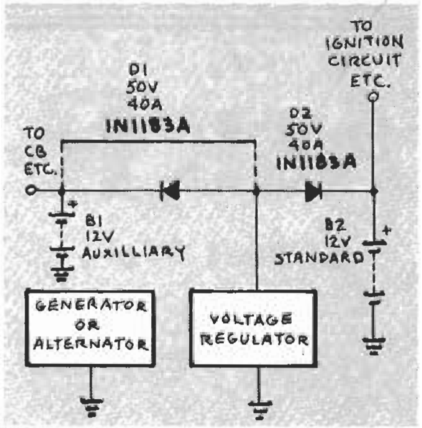

FIG. 4

Figure 4 shows how to use one battery for the normal circuits (ignition, horn, heater, etc.), and the other battery for your CB radio, siren, emergency lights, etc.

The diodes (D1 and D2) isolates the two batteries and their loads so that neither can be discharged by the other accidentally. **R-E**

WE SHIP PRODUCTS...NOT PROMISES

SAFE 'N SURE UNIVERSAL TEST LEAD KIT

•PRACTICAL · ECONOMICAL · HANDY · TIME SAVING · MAXIMUM FLEXIBILITY

This Versatile Modular Kit with 1001 uses allows you to make: **TEST LEADS, PATCH CORDS, CLIP LEADS, JUMPER-CABLES, TEST HOOK LEADS** compatible with instruments manufactured by: ***Beckman, Triplett, Simpson, Fluke, B&K, Keithley, Amprobe*** and other leading brands.

- Accessories screw on for positive, reliable connection. Supplied in pairs (red & black) with 48″ long wire leads.
- Packaged complete in neat and handy vinyl organizer carry pouch.
- Custom Leads on special order. Made in the U.S.A.

Kit Includes The Following:
*SCREW-ON ACCESSORIES*

- ⋆ Test Hooks
- ⋆ Spade Lugs
- ⋆ Alligator Clips
- ⋆ Banana Plugs

NEW!

CAT. No. 8025

Send For Complete Brochure

On-The-Shelves at your Local Distributor.

DESIGNERS MANUFACTURERS

KEYSTONE
ELECTRONICS CORP.

49 Bleecker Street, New York, NY 10012-2484 • Tel (212) 475-4600 • TLX: 35-3700 • FAX: 212-529-5923 • (800) 221-5510

CIRCLE 197 ON FREE INFORMATION CARD

## TRANSISTOR TESTER

**Q.** ***I have a number of old, unmarked transistors. Do you have a relatively simple circuit for a tester that could tell me if the transistors are shorted, open, npn or pnp?***—*P. Stys, Montreal, Quebec.*

**A.** The circuit shown here will allow you to check the polarities and junction conditions of unmarked or "grab-bag" transistors. Insert a transistor in the socket. While depressing *S2*, switch *S1* between both positions. Only one LED should light up, indicating the polarity of the transistor. If both LED's alternately light up when *S1* is varied, the transistor is exhibiting large leakage under reverse bias or has broken down. If the LED lights up when *S2* is released, the collector-base junction is shorted. If neither LED lights when *S2* is depressed, the transistor is open.

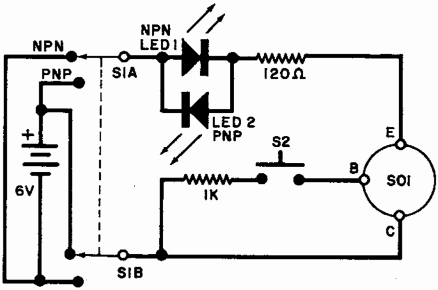

## IDENTIFYING SURPLUS IC's

In checking unmarked surplus IC's, a clue can be gained as to the identity of the IC if the ground pin can be located first. In epoxy encapsulated IC's, the truncated part of the lead frame can be seen at both ends, perhaps partially covered by moulding flash. This is generally connected to the substrate. In TTL and most linear IC's, this is the most negative pin (ground). In PMOS (clock and calculator chips) this is Vss, the most positive pin. An ohmmeter can find which pin is connected to the substrate by touching one probe to the frame and the other to each pin in turn.

Another clue to whether the IC is linear or digital is the fact that most digital IC's have diode protection against reverse bias at inputs. Knowing the ground pin, this can be checked rapidly.

### Checking Transistor Beta

**Q.** ***I know there are many transistor checkers around, but what I am looking for is a cheap way to determine beta. Is there a really simple way?***

**A.** Try this circuit for npn transistors. When you plug an unknown transistor into the socket (*SO1*), the circuit will automatically stabilize its collector current at 20 mA. Read the value of beta on the meter using the conversion scaling. For pnp's, be sure to use a pnp to source the current, and use −12 volts for $V_{CC}$. Almost any transistor can be used as the current source.

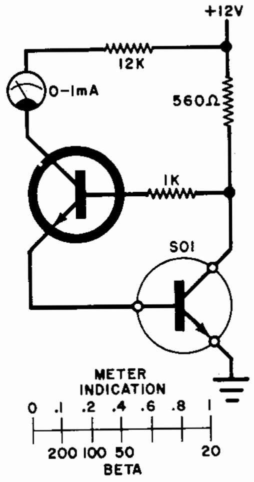

### HOBBY SCENE SCHEMATICS

In the Transistor Tester circuit shown in the March 1975 Hobby Scene, I believe that the npn and pnp LED's are transposed. *LED1* should be pnp, while *LED2* should be for npn indication.

DEAN ISLER
Blocksburg, S.C.