Technical Service Manual

MULTI-SYNC COLOR MONITOR

SM583

SM584/AEV

For Service Manuals
MAURITRON SERVICES
8 Cherry Tree Road, Chinnor
Oxfordshire, OX9 4QY.
Tel (01844) 351694
Fax (01844) 352554
email:- mauritron@dial.pipex.com

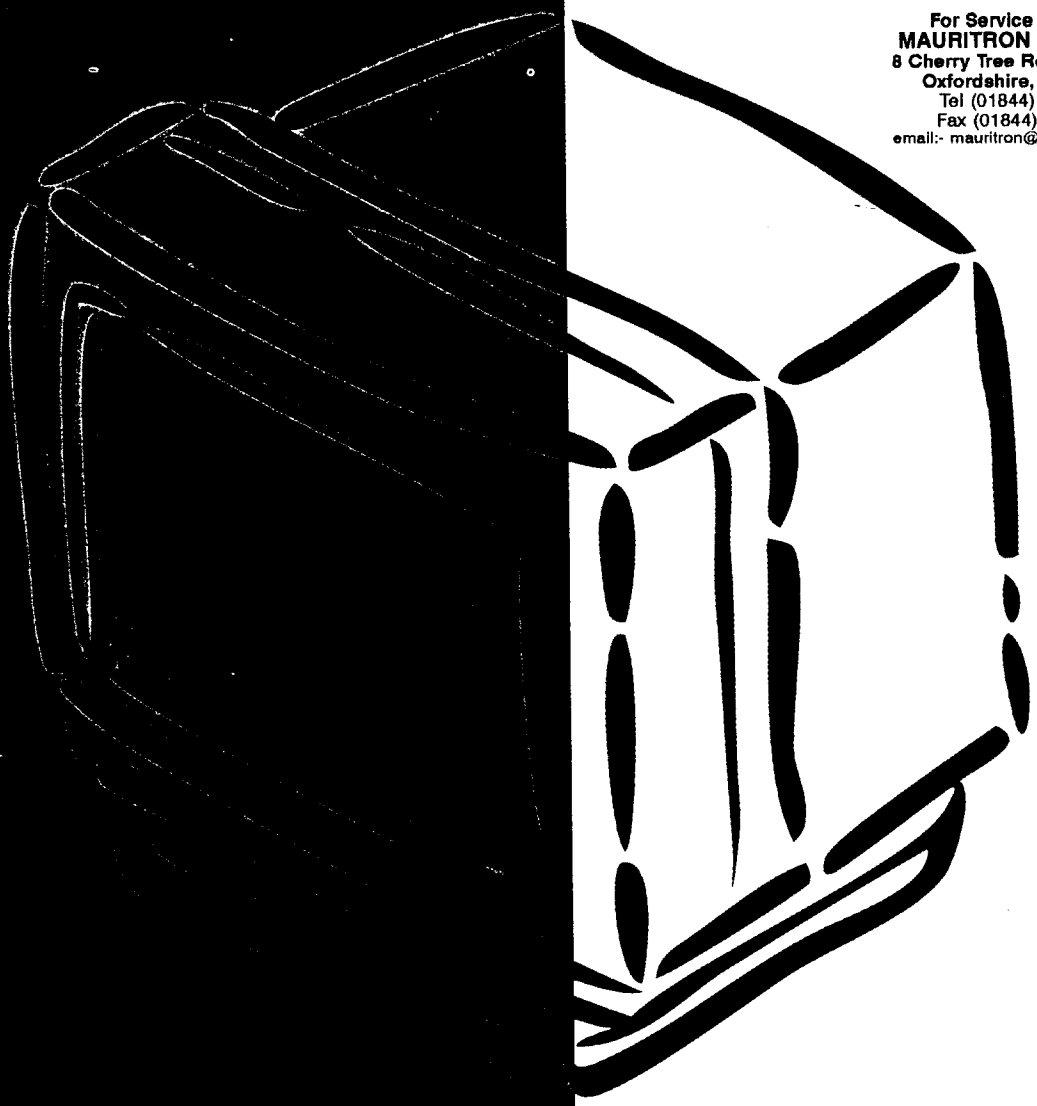

SHIN HO TECH CO., LTD.

CONTENTS

SPECIFICATION 1

SAFETY PRECAUTION 2

GENERAL INFORMATION 4

POWER MANAGEMENT SYSTEM 7

DISPLAY PERFORMANCE 8

PRESET FUNCTION OF THE MICROPROCESSOR
& FACTORY PRESET TIMING CHART 10

BLOCK DIAGRAM 11

ALIGNMENT PROCEDURE 13

TROUBLESHOOTING GUIDE 17

SCHEMATIC DIAGRAM 25

PRINTED WRITING BOARD 29

ELECTRICAL PARTS LIST 37

SPECIFICATION

- **Picture Tube**
  15" FST 90° Deflection (FLAT SQUARE CDT), Static Electricity Prevention
  0.28 mm DOT Pitch
  Non-glare
- **Scanning Frequency (Horizontal / Vertical)**
  31.47KHz / 70Hz, 31.47KHz / 60Hz, 35.5KHz / 87Hz, 35.15KHz / 56Hz
  37.86KHz / 72.8Hz, 37.88KHz / 60.3Hz, 48.077KHz / 72.18Hz, 48.363KHz / 60Hz,
  56.48KHz / 70Hz, 60.23KHz / 75.03Hz
  ☞ NOTE) SM583 Model is operate from 31Khz to 48Khz
- **Display Colors**
  Analog Input : Unlimited Colors.
- **Maximum Resolution (Non-Interlaced mode)**
  Horizontal : 1024 Dots.
  Vertical : 768 Lines.
- **Input Video Signal**
  Analog 0.7 vp-p Positive at 75 Ω Terminated.
- **Input Sync Signal**
  Separate Sync : TTL level Positive / Negative.
  Video Signal : Analog(0.7vp-p) Positive.
- **Supports VESA flicker-free modes.**
- **Digital Adjustment Control**
- **Energy Star Compliant**
- **Video Band Width** : Max. 75MHz ☞ NOTE) SM583 Band Width: Max. 65MHz
- **Active Display**
  Horizontal : 260mm ± 5mm.
  Vertical : 195mm ± 5mm.
  * Active Display Area is Changed by Signal Timing.
- **Input Voltage**
  AC 100-240Volt, 60Hz/50Hz ± 3Hz.
- **Power Consumption** : 80 Watt.(Max.)
- **Environmental Consideration**
  Operating Temperature : 32°F to 95°F (0℃ to 35℃)
  Humidity 30% to 80% .
  Storage Temperature : -4°F to 140°F (-20℃ to 60℃)
  Humidity 10% to 95% .
- **Dimension**
  Unit (H × W × D) : 15 × 14.3 × 15.4 inches (380 × 364 × 390 mm)
  Carton (H × W × D) : 17.5 × 16.1 × 17.2 inches (445 × 408 × 437 mm)
- **Weight**
  NET : 22Lbs (13Kg).
  GROSS : 26Lbs (15Kg).

DESIGNS and SPECIFICATIONS are subjected to change without prior NOTICE.

☞ NOTE) Details are next page make no attention it.

SAFETY PRECAUTIONS

Service work should be performed only by qualified service technicians who are thoroughly familiar with all of the following safety checks and servicing guidelines :

WARNING

1. For continued safety, do not attempt to modify the circuit.
2. Disconnect the AC power before servicing.
3. Semiconductor heat sinks are potential shock hazards when the chassis is operating.
4. Do not place anything heavy, wet or magnetic on the Monitor or on the power cord.
5. Be sure to turn the Monitor off before plugging in into the socket. Hold the plug when disconnecting it from the socket.
6. If the Monitor is not to be used for a long period, disconnect the power cord from the socket.
7. Make sure that the power cord and connection cords are securely connected.
8. Install the Monitor on a stable horizontal surface.
9. Avoid operating the Monitor in extreme heat, humidity or where it may be affected dust.
10. Never cover the ventilation holes or touch them with metalic or inflammable materials.
11. Never drop or otherwise strongly shock the Monitor.

SERVICING THE HIGH VOLTAGE SYSTEM AND PICTURE TUBE

When servicing the high voltage system,remove the static charge by connecting a 10kohm resistor is series with an insulated wire (such as a test probe) between the chassis and the anode lead. (The AC line cord should be disconnected from the AC outlet)

1. The picture tube in this display monitor employs integral implosion protection.
2. Replace with a tube of the same type and number for continued safety.
3. Do not lift the picture tube by the neck.
4. Handle the picture tube only when wearing shatter proof goggles and after discharging the high voltage anode completely.

X-RADIATION AND HIGH VOLTAGE LIMITS

1. Be sure all service personnel are aware of the procedures and instructions covering X-radiation. The only potential source of X-ray in a current solidstate display monitor is the tube.
   However, the picture tube does not emit measurable X-ray radiation if the high voltage is as specified in the "high voltage check" instruction. It is only when high voltage is excessive that X-radiation is capable of penetrating the shell of the picture tube, including the lead in glass material. The important precaution is to keep the high voltage below the maximum levelspecified.
2. It is essential that serviceman have available at all times am accurate high voltage meter. The calibration of this meter should be checked periodically.
3. High voltage should always be kept at the rated value-no higher. Operation at high voltage may cause a failure of the picture tube of high voltage circuitary and, also under certain conditions, may produce radiation in excess of desirable levels.
4. When the high voltage regulator is operating properly there is no possibility of an X-radiation problem.
   Everytime a color chassis is seviced, the brightness should be tested while monitoring the high voltage with a meter to be certain that the high voltage does not exceed the specified, value and that it is regulating correctly.
5. Do not use a picture tube other than that specified, or make unrecommended circuit modifications to the high voltage circuitry.
6. When trouble shooting taking test measurements on a display monitor with excessively high voltage, avoid being unnecessarily close to the display monitor. Do not operate the display monitor longer than is necessary to locate the cause excessive voltage.

FIRE AND SHOCK HAZARD

Before returning the display monitor to the user, perform the following safety checks:

1. Inspect all lead dress to make certain that the leads are not pinched or that hardware is not lodged between the chassis and other metal parts in the display monitor.
2. Inspect all protective devices such as nonmetallic control knobs, insulating materials, cabinet backs, adjustment and compartment cover or shields, isolation resistor-capacitor networks, mechanical insulator, etc.
3. To be sure that no shock hazard exists, checks for leakage current in the following manner:

- Plug the AC line cord directly into a 120volt AC outlet. (Do not use an isolation transformer for this test)
- Using two clips leads, connect 1.5kohm, 10 watt resistor paralled by a 0.15uF capacitor in series with all exposed metal cabinet parts and a known earth ground, such as electrical conduct or electrical ground connected to earth ground.
- Use a SSVM or VOM with 1000 ohms per-volt or higher sensitivity to measure the AC voltage drop across the resistor. (see Figure 1.)
- Connect the resistor to all exposed metal parts having a return path to the chassis (metal cabinet, screw heads, knobs and shafts, escutcheon, etc.) and measure the AC voltage drop across the resistor.
- Any reading of 5.25 volt RMS (this corresponds to 3.5 milliamp. AC) or more is excessive and indicates a potential chock hazard which must be corrected before returning the display monitor to the user.

SAFETY NOTICE

Many electrical and mechanical parts which have special characteristics in the chassis often pass unnoticed and the protection afforded by them can not necessarily be obtained by using replacement components rated for higher voltage, wattage, etc.

Replacement parts that have these special safety characteristics are identified in this manual, and its supplement electrical components having such features are identified by a in the Parts List and Schematic Diagrams.
Before replacing nay of these components, read the Parts List this manual carefully. The use of substitute replacement parts that do not have the same safety characteristics as specified in the Parts List may create shock,fire, or other hazards.

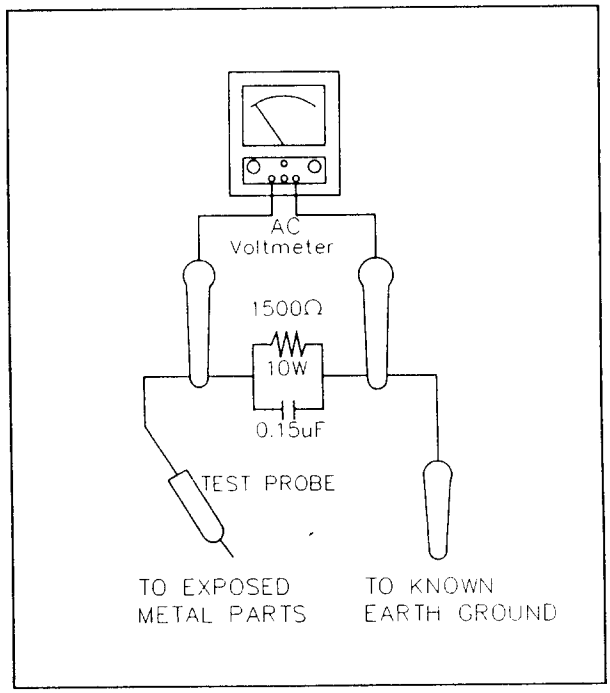

Figure 1. Leakage Current Test Circuit

GENERAL INFORMATION

1. FEATURES

- 15 inch high performance CRT.
  - Available in FST 0.28mm dot pitch
- Automatically scans frequencies from 31.47KHz / 70Hz, 31.47KHz / 60Hz, 35.5KHz / 87Hz, 35.15KHz / 56Hz, 37.86KHz / 72.83Hz, 37.88KHz / 60.3Hz, 37.86KHz / 72.8Hz, 48.077KHz / 72.18Hz, 48.363KHz / 60Hz, 56.48KHz / 70Hz, 60.23KHz / 75.03Hz
- Compatible with a wide variety of video standards including VGA, IBM 8514/A(XGA), and Super-VGA, ULTRA-VGA
- Size and position controls are located up front for easy and accurate adjustment.
- Easy access contrast, brightness, v-size, v-center, h-size, h-phase, pin cushion, recall, up, down.
- Digital adjustment control
- The optional tilt and swivel stand may be attached to provide a variety of viewing angles, or not attached if limited workspace is a consideration.
- Power supply operates on AC 100-240 volt 60 / 50Hz for use all over the world.

2. INSTALLATION

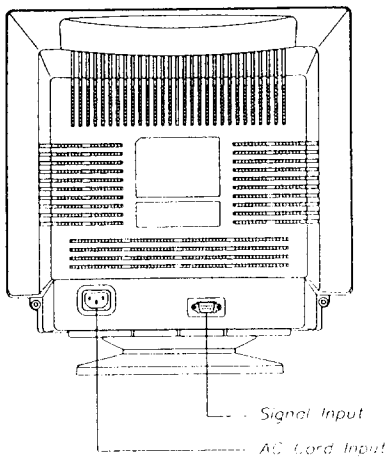

This monitor can be connected to any IBM compatible analog display adapter. such adapters include VGA,8514/A,XGA,ULTRA VGA and the built-in video system of IBM ps/2 computers and compatibles.
To attach the monitor to your system, use the following instructions:

1. Turn off the power to the computer.
2. Insert AC power cord into monitor and then into an AC power outlet.
3. Connect the 9 pin side of the signal cable to the 9 pin D-SUB connector on the rear side of the monitor.
4. Connect the 15 pin side of the signal cable to the video output port of your video controller.

   Note : please see the connector pin assignment chart for the video controller (video controller manual) and the connector pin assignment chart for the monitor (page 6 this manual) if the video controller does not have a standard 15 pin D-SUB connector.
5. Before turning on the power to the monitor and computer,check your computer's owner's manual for instructions about turning on equipment connected to the computer.
   Also,check for any instructions for your video system when using a multi-sync monitor. In some cases, jumper or switch settings may be required for the video board to output extended resolution modes.
6. To turn on the monitor, push the power switch. The power indicator LED will light. To turn the monitor off, push the power switch once again. The power indicator LED will also turn off.

3. CONTROL LOCATION & FUNCTIONS

3-1. FRONT VIEW

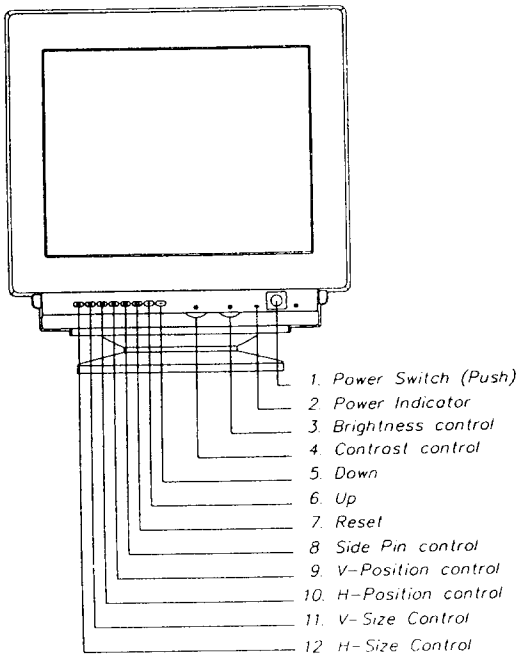

3-2. BASIC CONTROLS & FUNCTIONS

- **Power switch**

  Use to turn monitor power on and off. push switch once to turn monitor power on. LED power on indicator will also turn on. push switch once again to turn monitor power off.

  - Power Indicator (Green /Amber)
    indicator illuminates GREEN when the monitor s normal act.
    when the monitor is choose control function, LED is blinkerling on green.

- **Brightness control**

  Use to adjust the overall brightness of the displayed image.

  The brightness control volume adjusts the picture according to the brightness of the room.
  -.Turn the right side of the volume to increase the brightness of the picture
  -.Turn the left side of the volume to decrease the brightness of the picture.

- **Contrast control**

  Use to adjust the contrast level of the displayed image. contrast controls the difference between dark and light areas of the displayed image.
  -.Turn the right side of the volume to increase the contrast level of the displayed image.
  -.Turn the left side of the volume to decrease the contrast level of the displayed image.

- **KEY BUTTON**

  Press this key is decrease or move downward, move left, make image like a bobbin.

- **KEY BUTTON**

  Press this key is increase or move upward, move right, make image like a barrel.

- **RESET**

  Retrieve the factory presetting by pressing the button.

- **V-POSITION CONTROL**

  Adjust this control for the proper vertical positioon (centering) of the display
  - Press the ⊕ key button to adjusts the screen to the top.
  - Press the ⊖ key button to adjusts the screen to the bottom.

- **H-POSITION**

  Adjust this control for the proper horizontal position (centering)of the display.
  - Press the ⊕ key button to adjusts the screen to the right.
  - Press the ⊖ key button to adjusts the screen to the left.

- **V-SIZE**

  Adjust this control for the desired vertical size of the display.
  - Press the ⊕ key button to increase the vertical size for a large display.
  - Press the ⊖ key button to decrease the vertical size for a small display.

- ⊖ **H-SIZE**

  Adjust this control for the desired horizontal size(width) of the display.
  - Press the ⊕ key button to increase the horizontal size for a wide display.
  - Press the ⊖ key button to decrease the horizontal size for a narrow display.

4. USE OF THE TILT-SWIVEL

With the tilt-swivel, this unit can be adjusted to be viewed at your desired angle within 60° horizontally and 15° vertically.

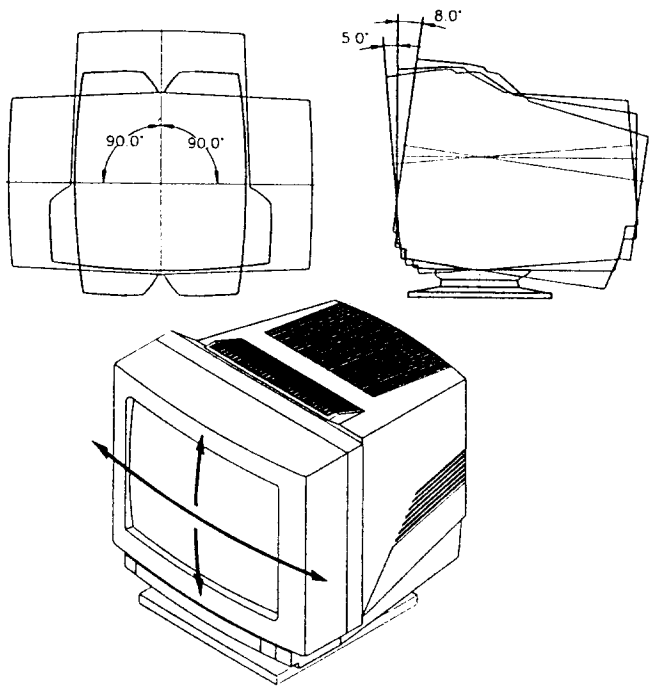

To turn the unit horizontally, hold it at its bottom with you both hands as illustrated below.

5. SIGNAL CONNECTIONS AND PIN ASSIGNMENTS

- Input Signal : R.G.B Analog
  D-SUB CONNECTOR

  The 9 pin D-SUB connector can be used with the supplied 9-15 pin cable.
  The 15 pin side connects to any IBM compatible VGA video port, the 9 pin side to the monitor's connector

D-SUB SIGNAL INPUT

PIN ASSIGNMENT	SIGNALS
1	RED
2	GREEN
3	BLUE
4	H-SYNC
5	V-SYNC
6	GND-R
7	GND-G
8	GND-B
9	GND-SYNC

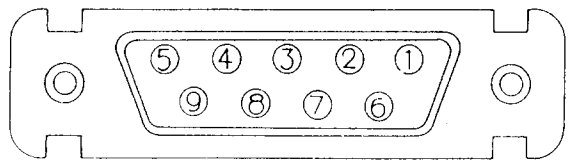

(Figure)

For Service Manuals
MAURITRON SERVICES
8 Cherry Tree Road, Chinnor
Oxfordshire, OX9 4QY.
Tel (01844) 351694
Fax (01844) 352554
email:- mauritron@dial.pipex.com

POWER MANAGEMENT SYSTEM

This monitor is energy star compliant when used with a computer equiped with DPMS.
If your computer system cannot support a display power management function,
you may purchase a optional DPMS software program to have power saving function.
The following table shows the power saving modes.

Table : Display Power Management Signaling(DPMS)

State / Sync	Normal operation	Power Saving Function Mode		
		Stand-by Mode	Suspend Mode	Power-off Mode
Horizontal	Active	No Pulse	Active	No Pulse
Vertical	Active	Active	No Pulse	No Pulse
Video	Active	Blanked	Blanked	Blanked
LED color	Green	Green	Green Blinking	Off
Power	Max	Less than	Less than	Less than
Consumption	80W	65W	12W	5W

NOTE : This monitor automatically returns to normal operation state when horizontal and vertical sync returns.

"For pluggable equipment, the socket outlet shall be installed near the equipment and shall be easily accessible."

DISPLAY PERFORMANCE

1. DISPLAY AREA

- WIDTH : 260 ± 5mm
- HEIGHT : 195 ± 5mm

2. CENTERING

| A-B | ≤ 3mm

| C-D | ≤ 2.5mm

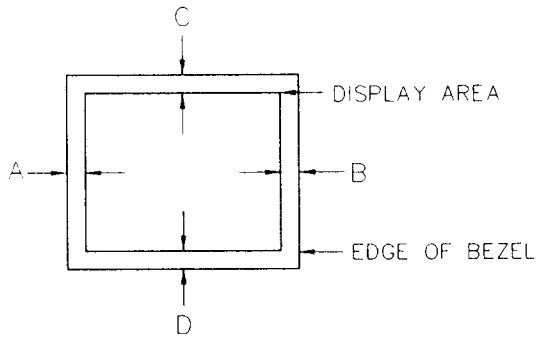

3. DISTORTION

a) Trapezoid

$$\frac{|AC - BD|}{|AC + BD|} \times 100 \leq 1\%$$

$$\frac{|AB - CD|}{|AB + CD|} \times 100 \leq 1\%$$

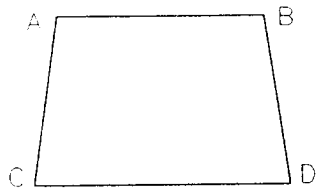

b) Parallelogram

| A | ≤ 2.5mm

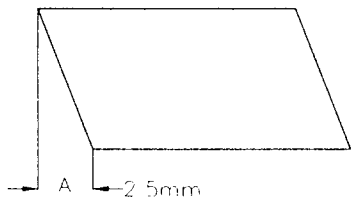

c) Pincushion

| C1 | , | C2 | ≤ 2.5mm (0.98")

| D1 | , | D2 | ≤ 3.0mm (0.98")

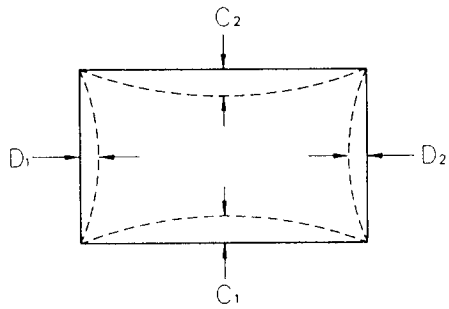

d) Rotation

| H1 − H2 | ≤ 2.0mm (± 0.5°)

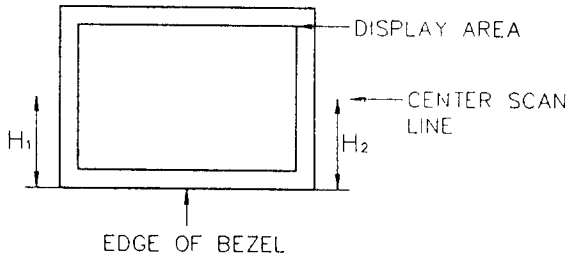

4. LINEARITY

- Horizontal linearity

$$HL = \frac{Xmax - Xmin}{\overline{X}} \times 100\% \times 0.5 \leq 7\%$$

- Vertical linearity

$$VL = \frac{Ymax - Ymin}{\overline{Y}} \times 100\% \times 0.5 \leq 5\%$$

HL $\leq$ 7% , VL $\leq$ 5% for this others mode

- Standard mode : 31.5 KHz
- Others mode : 8514/A, Super VGA, VESA VGA, VESA SVGA, ULTRA-VGA

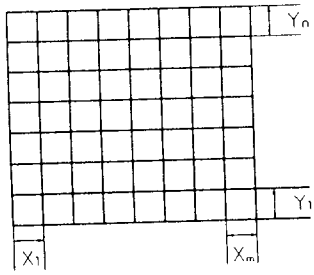

- Conditions
  Display image : crosshatch pattern
  Maximum and minimum values should not be adjacent each other

  X max is maximum value among X1 ~ Xm
  X min is minimum value among X1 ~ Xm

$$\overline{X} = \frac{X1 + X2 \ldots Xn}{m} \quad (m \geq 11)$$

  Y max is maximum value among Y1 ~ Yn
  Y min is minimum value among Y1 ~ Yn

$$\overline{Y} = \frac{Y1 + Y2 \ldots Yn}{n} \quad (n \geq 10)$$

5. BRIGHTNESS UNIFORMITY

Value	65% (Min) Variation = $\frac{C}{A}$ x 100
Conditions	Dispaly image : white plat field Luminance : F/L at the center of display area A : Luminance at position of the highest C : Luminance at position of lowest brightness

6. COLOR POINT

Value	9300°K + 27MPCD X = 0.281 ± 0.03, Y = 0.311 ± 0.03
Conditions	Display image : White flat field at the center of display area. Luminance : min : 5 F/L max : 20 F/L

7. MISCONVERGENCE

Center area of display
("A" circle is 180 mm) (A) : 0.3mm
Peripheral area of display (B) : 0.45mm

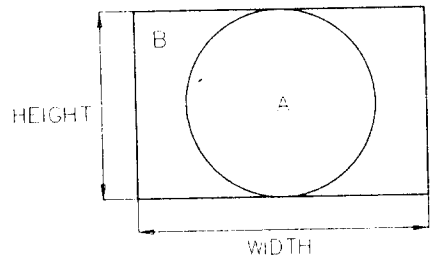

- Conditions
  Display image : Crosshatch pattern mixed with R. G and B colors

8. PURITY

Conspicuous mislanding shall not be visible within display area at distance of 50Cm (23.6") from CRT surface.

- Conditions
  Display image : White flat field
  Luminance : 20 F/L at the center of display area.

FACTORY PRESET SIGNAL TIMING CHART

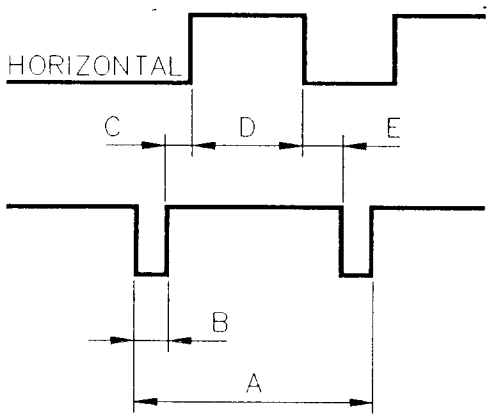

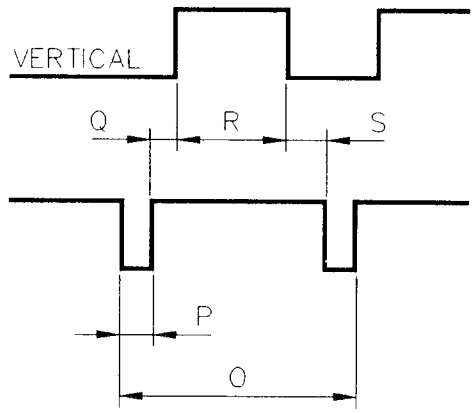

Mode / Timing	VGA & MCGA Compatible			8514/A	XGA	SVGA	VESA		ULTRA VGA		
	VGA1	VGA2	VGA3				VGA	SVGA			
	640×350	640×400	640×480	1024×768	1024×768	800×600	640×480	800×600	800×600	1024×768	1024×768
FH(KHz)	31.468	31.468	31.468	35.520	61.000	35.156	37.860	37.879	48.077	48.363	56.476
A u sec	31.778	31.778	31.778	28.150	16.372	28.444	26.413	26.400	20.800	20.677	17.707
B u sec	3.813	3.813	3.813	3.920	3.720	2.000	1.270	3.200	2.400	2.092	1.813
C u sec	1.589	1.589	1.589	1.250	0.651	3.556	4.603	2.200	1.280	2.462	1.920
D u sec	26.058	26.058	26.058	22.800	11.907	22.222	20.317	20.000	16.000	15.754	13.653
E u sec	0.318	0.318	0.318	0.180	0.903	0.667	0.762	1.000	1.120	0.369	0.320
FV(Hz)	70.080	70.080	59.940	86.960	75.780	56.250	72.809	60.317	72.180	60.000	70.609
O u sec	14.268	14.268	16.683	11.500	13.196	17.778	13.735	16.579	13.850	16.667	14.272
P u sec	0.064	0.064	0.064	0.113	0.079	0.057	0.079	0.106	0.125	0.124	0.016
Q u sec	1.716	0.890	0.794	0.563	0.739	0.626	0.740	0.607	0.478	0.600	0.513
R u sec	11.504	13.156	15.762	10.810	12.678	17.067	12.678	15.840	12.480	15.880	13.599
S u sec	0.985	0.159	0.064	0.014	0.037	0.028	0.238	0.026	0.770	0.062	0.053
Clock Fre. (MHz)	25.175	28.322	25.175	44.912	31.500	36.000	31.500	40.000	50.024	65.000	75.000
Polarity H. Sync V. Sync	Positive Negative	Negative Positive	Negative Negative	Positive Positive	Negative Negative	Posi./Nega. Posi./Nega.	Posi./Nega. Posi./Nega.	Posi./Nega. Posi./Nega.	Posi./Nega. Posi./Nega.	Posi./Nega. Posi./Nega	Negative Negative
Remark				Interlaced							Non-Interlaced

BLOCK DIAGRAM

MODEL NAME : SM584AGV

DRAWING DATE : 1994. 10. 15.

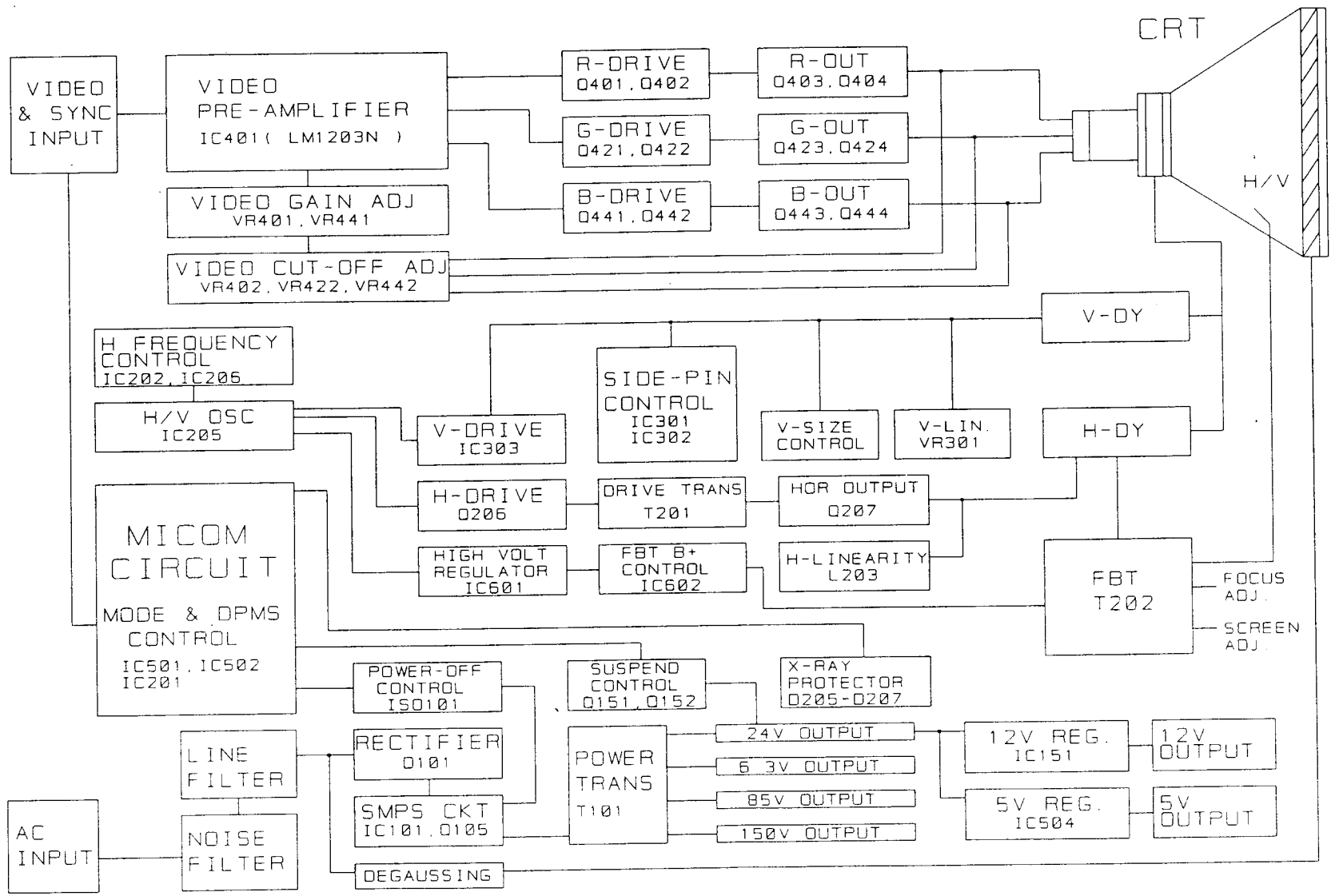

BLOCK DIAGRAM

MODEL NAME : SM583

DRAWING DATE : 1995 . 03 . 07

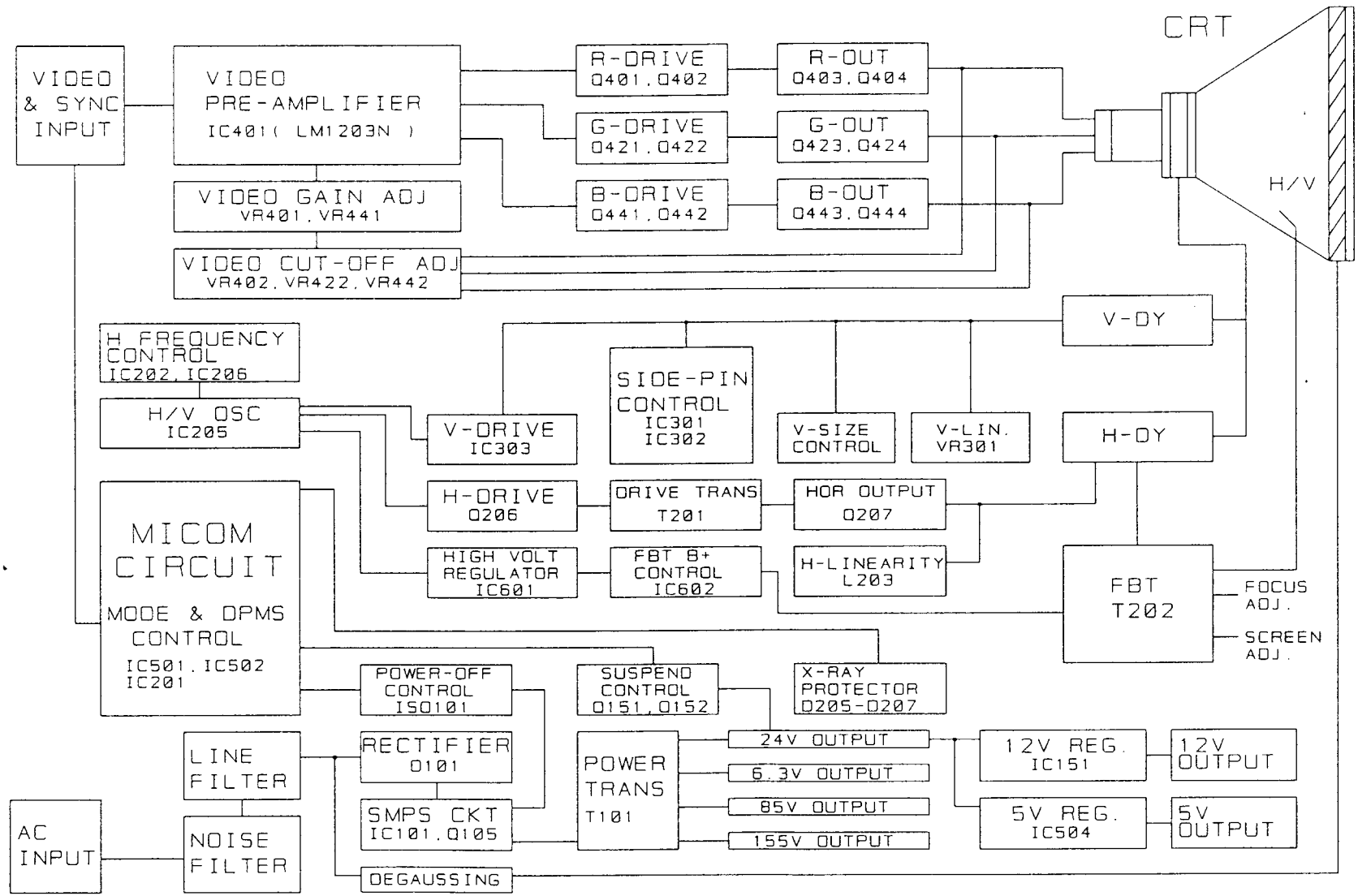

ALIGNMENT PROCEDURE

ADJUSTMENT CONDITIONS AND PRECAUTIONS

- Power supply voltage
  AC 100V-240V (60Hz / 50Hz)

- Warm up time
  The display must be on for 15 minute before starting alignment
  This is especially critical in color temperature and white balance adjustments.

- Signal
  Video Analog 0.7 Vp-p Positive at 75 ohm Terminated.

- Sync on green : Video 0.7 Vp-p Positive
  : Sync. 0.3 Vp-p Negative
  Sync : TTL level negative / positive separate / composite

- Scanning frequency (Horizontal / Vertical)
  31.47KHz / 70Hz, 31.47KHz / 60Hz, 35.5KHz / 87Hz, 35.15KHz / 56Hz, 37.86KHz / 72.8Hz, 37.88KHz / 60.3Hz, 48.07kHz / 72.18Hz, 48.363kHz / 60Hz, 56.48KHz / 70Hz, 60.23KHz / 75.03Hz

1. MAIN PWB PREPARE ADJUSTMENT

(1) Operate the monitor.
(2) Connect the plus pole of DVM (Digital Multi Meter) to the cathode of 150V ADJ. and connect the other pole(GND) to chassis GND.
(3) Rotate the B+ voltage adjusting control VR151 to provide 150V DC
(SM583 MODEL : 155V DC)
Condition : brightness, contrast VR max in white pattern.

2. HORIZONTAL FREQUENCY ADJUSTMENT

(Instrument in use : frequency counter, scope probe)

(1) Connect the plus pole of the scope to RED wire jacket of DY and the minus pole to chassis frame.

(2) At self raster (disconnect the signal cable), adjust the horizontal frequency control VR 203 so that horizontal frequency : 31.5KHz.
(Free running frequency : 31.5KHz ± 100Hz)

3. FBT B+ ADJUSTMENT (HIGH VOLTAGE)

(1) Connect the plus pole of DVM to the J215 and connect the other pole to the chassis GND.
(2) Rotate the B+ voltage adjusting control VR602 to provide 69 ± 0.3V DC.
(SM583 MODEL : 68 ± 0.3V DC.)
Condition : brightness, contrast VR max VGA mode3

4. HORIZONTAL PHASE ADJUSTMENT

Press the horizontal phase control button ⊕, ⊖ key button use, adjust the horizontal phase is placed on the center.
mode 3 (31.46KHz /60 Hz)

5. HORIZONTAL SIZE ADJUSTMENT

(260MM ± 5 MM)

Press the horizontal size control button ⊕, ⊖ key button use, adjust the horizontal size of displayed pattern is 260mm
(Tolerance ± 5mm)
mode 3 (31.46KHz /60 Hz)

6.VERTICAL PHASE ADJUSTMENT

Press the vertical phase control button ⊕, ⊖ key button use, adjust the vertical phase is placed on the center.
mode 3 (31.46KHz /60 Hz)

7. VERTICAL SIZE ADJUSTMENT

(195mm ± 3mm)

Press the horizontal size control button ⊕, ⊖ key button use, adjust the vertical size of displayed pattern is 195mm (Tolerance ± 3mm)
mode 3 (31.46KHz /60 Hz)

8. VERTICAL LINEARITY ADJUSTMENT

(SPEC : 5% MAX)

Press the vertical linearity control button ⊕, ⊖ key button use, adjust the displayed pattern symmetrize top and bottom
mode 3 (31.46KHz /60 Hz)

9. SIDE-PINCUSHION ADJUSTMENT

(PINCUSHION : 2.5 mm , BARREL : 1mm)

Press the vertical linearity control button ⊕, ⊖ key button use , adjust the displayed pattern side lines become straight in
mode 1 (31.46KHz /70 Hz)

10. SCREEN PREPARATION ADJUSTMENT

Operate the monitor to display the full white pattern on screen and warm up for more than 15 minutes. Adjust screen VR(in FBT) so that back raster appears clearly at brightness and contrast VR max, but disappears at brightness VR (detent position) center and contrast VR max.
Set the screen brightness 2±1 F/L

11. FOCUS ADJUSTMENT

(1) Operate the monitor to display the full white pattern on the screen
(2) Set the brightness VR center, adjust the contrast VR set the screen brightness 20F/L
(3) Change the pattern into "H" character pattern on the screen
(4) Rotate the focus adjusting control in FBT for the best focus.

12. WHITE BALANCE ADJUSTMENT

X = 0.281 ± 0.03
Y = 0.311 ± 0.03

(1) Have to do aging over 15minutes before adjust.
(2) Set drive VR (VR401, VR441) and bias VR (VR402, VR422, VR442) on CRT board to mechanical center position.
(3) Adjust bright VR and contrast VR (External VR) to max position.
(4) - Set test pattern to black pattern.
- Set luminance to 2-3 F/L by screen voltage VR
- Adjust bias VR(VR402.VR421.VR442)to get the following values which measured by color analyzer in center clockwise.
X = 0.281 ± 0.03
Y = 0.311 ± 0.03
(5) - After adjustment,
Adjust back raster luminance to 0.6 ± 0.1 F/L by screen voltage VR (in FBT).
(6) - Set test pattern to white pattern in VGA mode Set luminance to 10.0 ± 0.5 F/L by contrast VR.
- Adjust the drive VR (VR401, VR441) to get the following values which measured by color analyzer in center clockwise.
X = 0.281 ± 0.03
Y = 0.311 ± 0.03
(7) - Set test pattern to white pattern
- Set bright control (☼) and contrast control (◑) to max position.
- Adjust luminance to 30 F/L±0.5 F/L by VR601 (SUB-BRIGHT)

13. CRT TILT ADJUSTMENT

Reassembly the CRT with fastening screws so that the dimension A and B are separately equal.

14. STATIC(CENTER) CONVERGENCE

(CENTER : 0.3 mm MAX
CORNER : 0.45 mm MAX)

Switch the monitor ON and warm up for 15 minutes. Operate the computer in such a way that the cross hatch patter is displayed on screen. Convergence error should not be over than following table.

POSITION	ERROR IN (MM)	CRT DOT-PITCH	MODEL NO
CENTER	0.3	0.28	SM584/SM583
CORNER	0.45	0.28	SM584/SM583

Proceed as follows.

(1) Locate the pair of four pole magnet rings.
(2) Rotate the individual rings (change spacing between tabs) to converge the vertical red and lines
(3) Rotate the pair of rings (maintaining spacing between tabs) to converge the horizontal red and blue line.
(4) After completing the red and blue lines.
(5) Rotate the individual rings (change spacing between tabs) to converge the vertical red and blue (magenta)and green lines.
(6) Rotate the pair of rings (maintaining spacing between tabs) to converge the horizontal red and blue (magenta)and green lines.
(7) Magnet position SAMSUNG and ORION (CRT maker) 4 pole / 6 pole / 2 pole (from the front of CDT)
(8) Don't rotate the 2 pole magnet because it's object is to adjust the purity.

15. DYNAMIC CONVERGENCE

Dynamic convergence (convergence of the three color fields at the edge of the CRT screen) is accomplished by the proper insertion and positioning of the three wedges between the edge of deflection yoke and the funnel of the CRT.

- Alignment of (R) and (B) with the 4-pole magnet

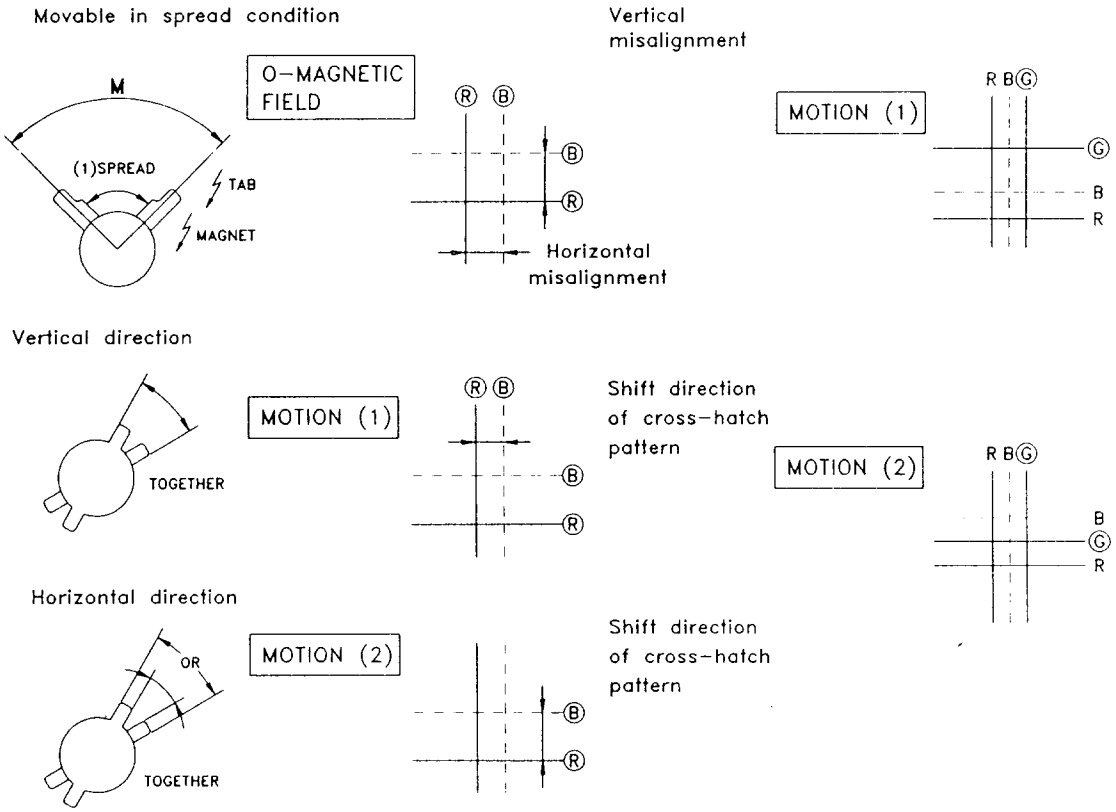

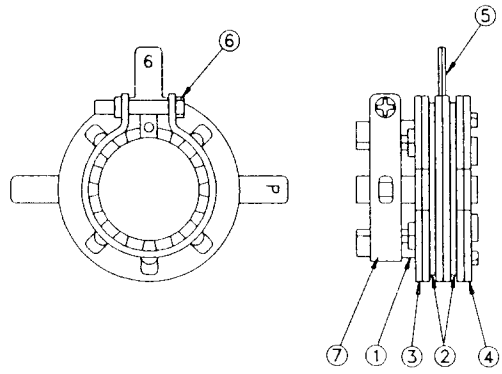

Convergence Purity Magnet

1. Holder
2. Spacer
3. Purity magnet
4. 4 pole magnet
5. 6 pole magnet
6. Setup bolt
7. Band

16. PURITY CHECK

- Set test pattern to full white pattern
  Mode3 (31.46KHz /60Hz)
- The screen should be viewed with blanked red, green and blue raster at a the front line.
- When the monitor designate direction right and left 15° rotate,confirm the purity is not grow from bad to worse

17. DPMS TEST

(1) Set SW102 to center position
(2) When the monitor is normal operation, LED illuminates on green.
(3) Suspend mode a state, LED illuminates at an interval of 1/2 second on green .
    Power consumption (less than 12W)
(4) Power-off mode a state, LED is off.
    Power consumption (less than 5W)
(5) Confirm the monitor returns to normal operation .state when horizontal and vertical sync returns.

TROUBLESHOOTING GUIDE

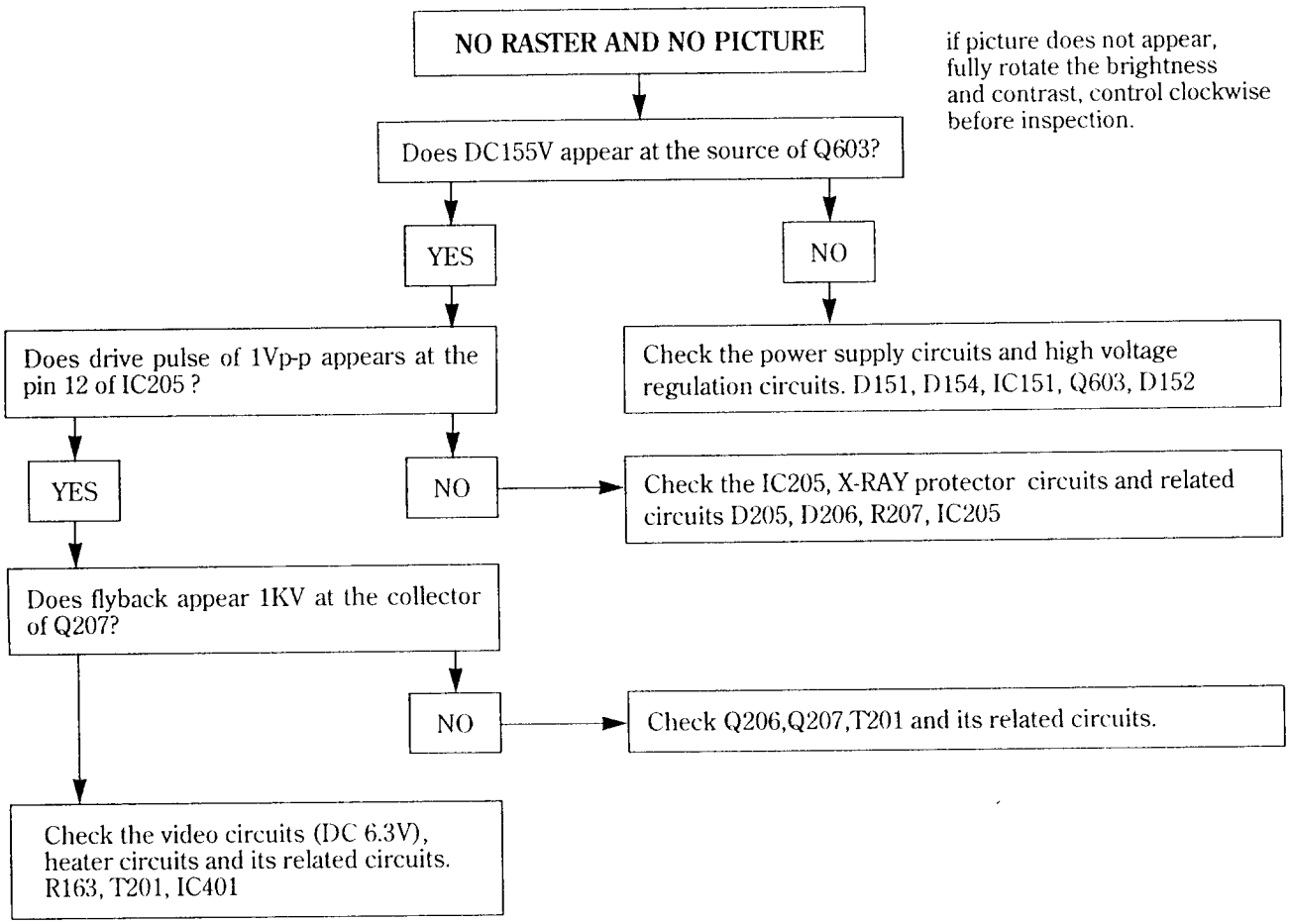

CIRCUIT TO BE CHECKED

1. No raster appears
   - power circuits - horizontal output circuits
2. A high voltage develops but no raster appears
   - video output circuits
3. A high voltage is not developed
   - horizontal output circuits.

HORIZONTAL LINE ON RASTER

Does 24V appear at the pin 8 of IC303?

- YES → Does output pulse of 24Vp-p appear at the pin 12 of IC303?
  - YES → Check IC303 and its related circuits.
  - NO → Replace IC303 or check its related circuits. (IC303, D303, C315, C320)
- NO → Check the power supply circuits. (D112, C121, R318)

VERTICAL LINE ON RASTER

Does 12V appear at pin 10 and 20 of IC205?

- YES → Does drive pulse appear at the pin 12 of IC205?
  - YES → Check flyback pulse at the collector of Q207, CN201 if not correct, replace Q206, Q207 and T201 or check its related circuits.
  - NO → Replace IC205 or check its related circuits.
- NO → Check the power supply circuits or replace IC151. (D153, C160, IC101, Q105)

For Service Manuals
MAURITRON SERVICES
8 Cherry Tree Road, Chinnor
Oxfordshire, OX9 4QY.
Tel (01844) 351694
Fax (01844) 352554
email:- mauritron@dial.pipex.com

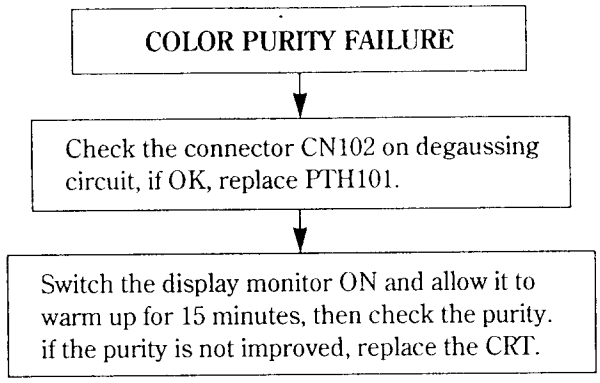

NOTE : if color purity is not normal, manual degaussing should be done by mandatory method using the manual degaussing coil before inspection.

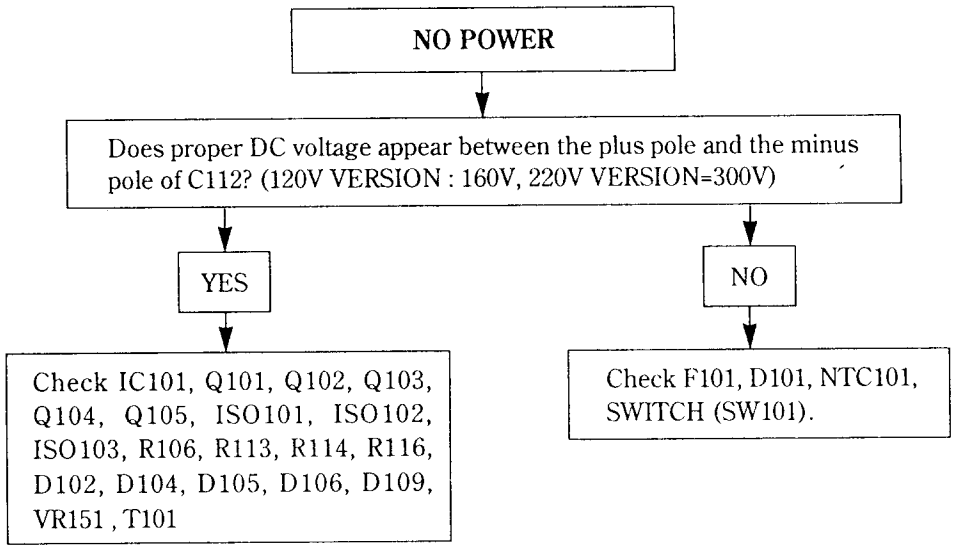

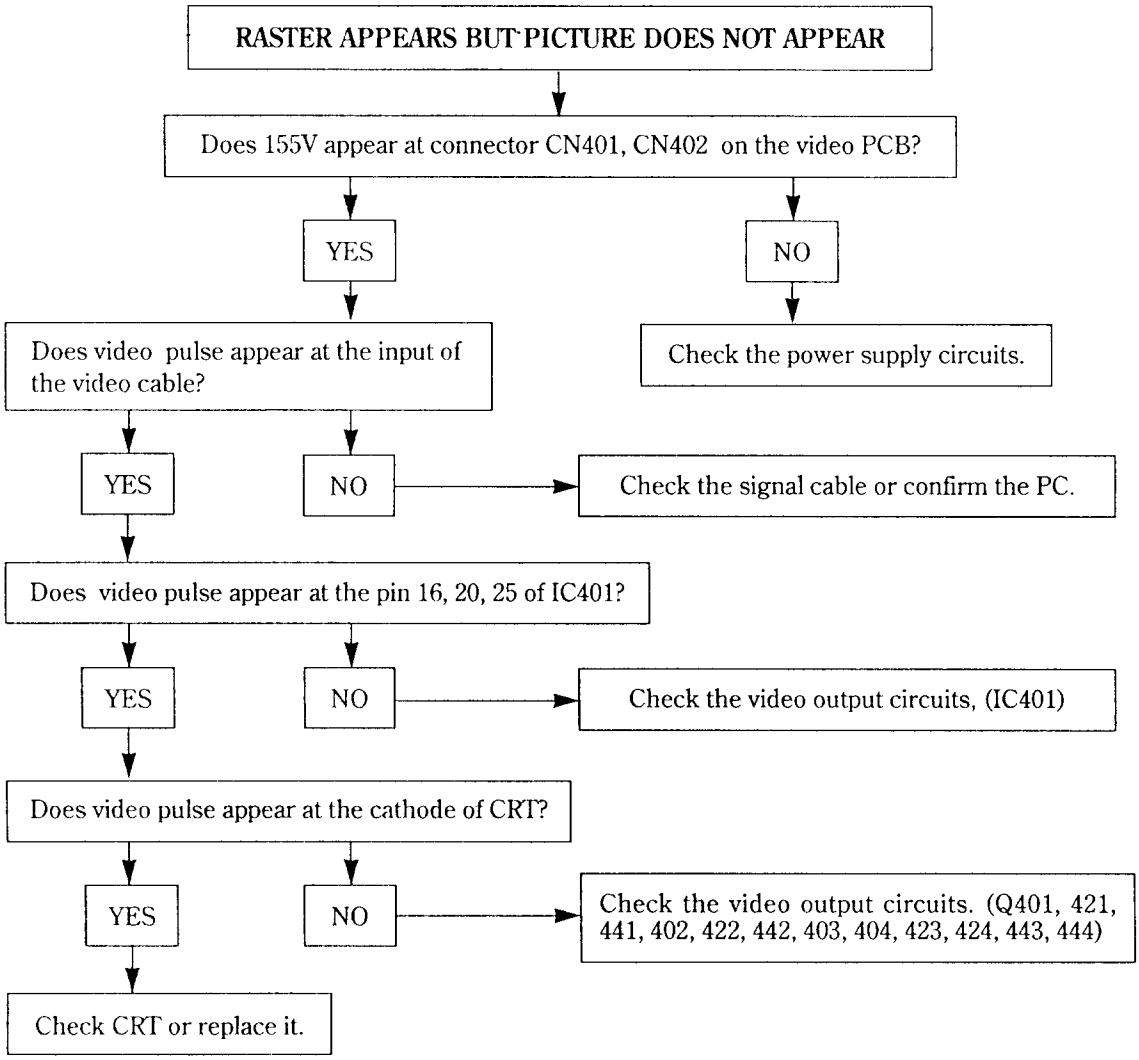
RASTER APPEARS BUT PICTURE DOES NOT APPEAR
Does 155V appear at connector CN401, CN402 on the video PCB?
YES
NO
Check the power supply circuits.
Does video pulse appear at the input of the video cable?
YES
NO
Check the signal cable or confirm the PC.
Does video pulse appear at the pin 16, 20, 25 of IC401?
YES
NO
Check the video output circuits, (IC401)
Does video pulse appear at the cathode of CRT?
YES
NO
Check the video output circuits. (Q401, 421, 441, 402, 422, 442, 403, 404, 423, 424, 443, 444)
Check CRT or replace it.

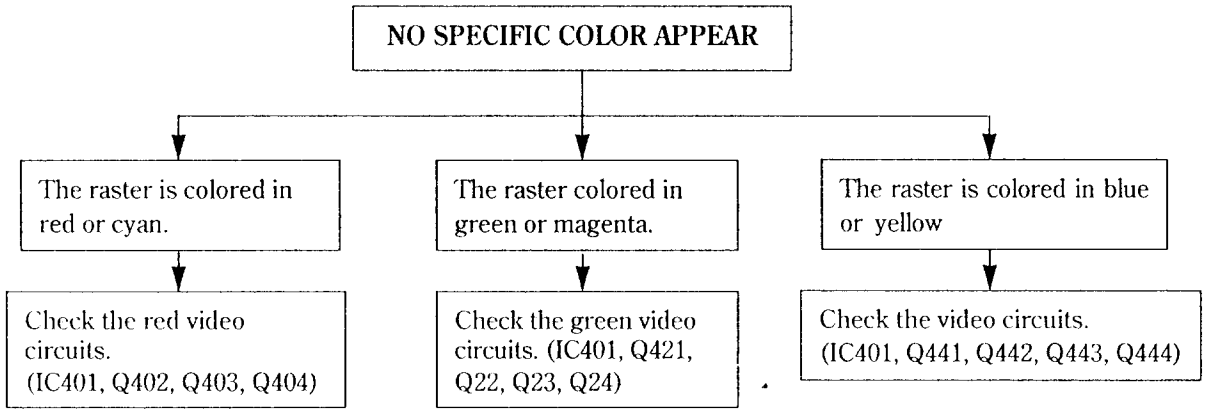
NO SPECIFIC COLOR APPEAR
The raster is colored in red or cyan.
The raster colored in green or magenta.
The raster is colored in blue or yellow
Check the red video circuits. (IC401, Q402, Q403, Q404)
Check the green video circuits. (IC401, Q421, Q22, Q23, Q24)
Check the video circuits. (IC401, Q441, Q442, Q443, Q444)

[TABLE]

PIN / MODE	17	18	19
31KHz	H	H	H
35KHz	L	L	H
38KHz	L	L	H
48KHz	L	H	H
56KHz	H	H	H

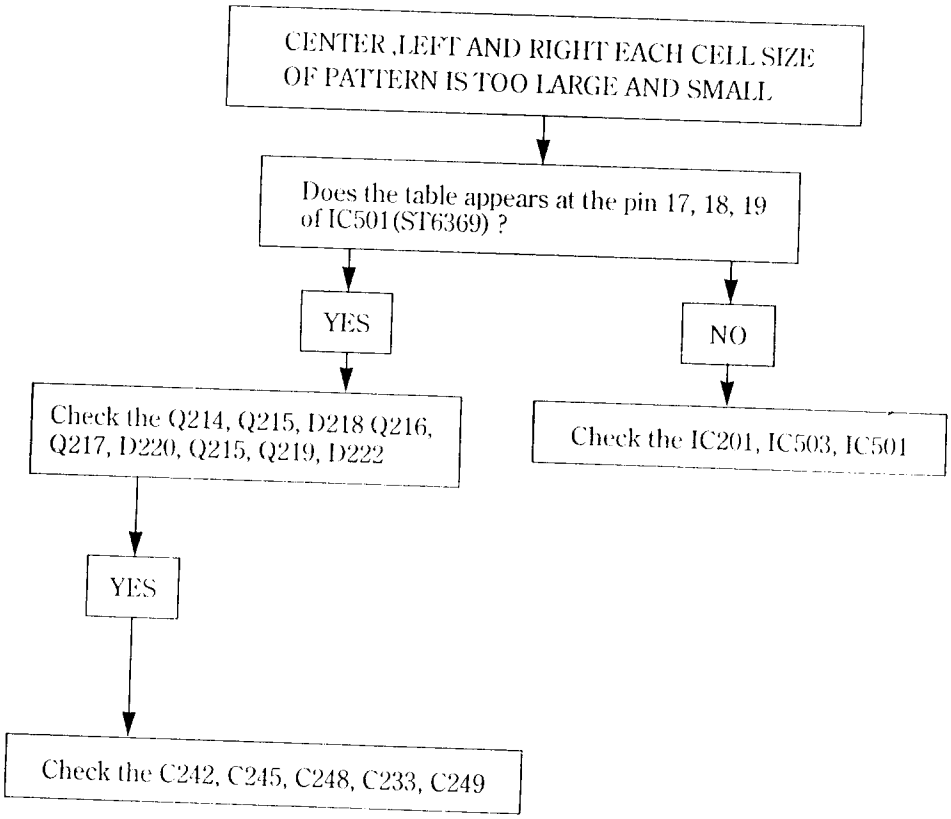

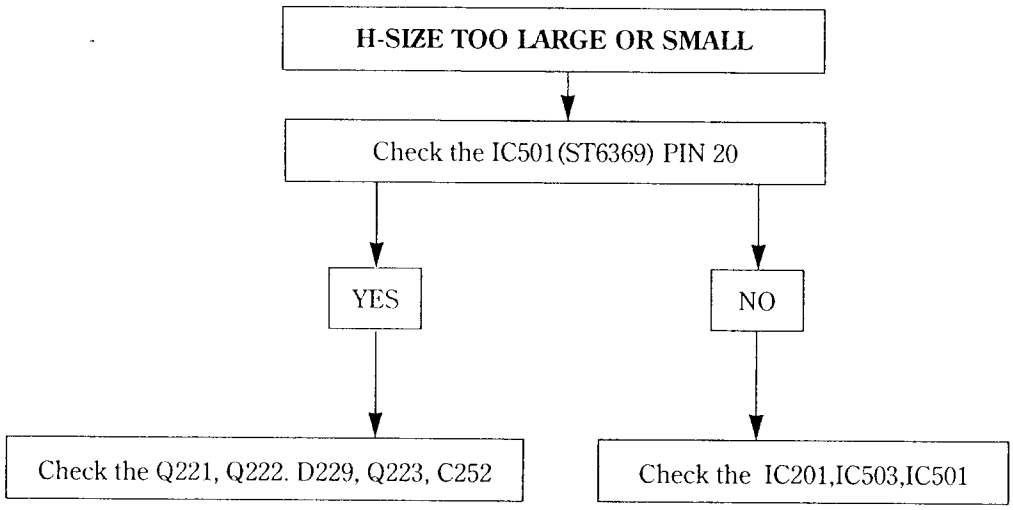

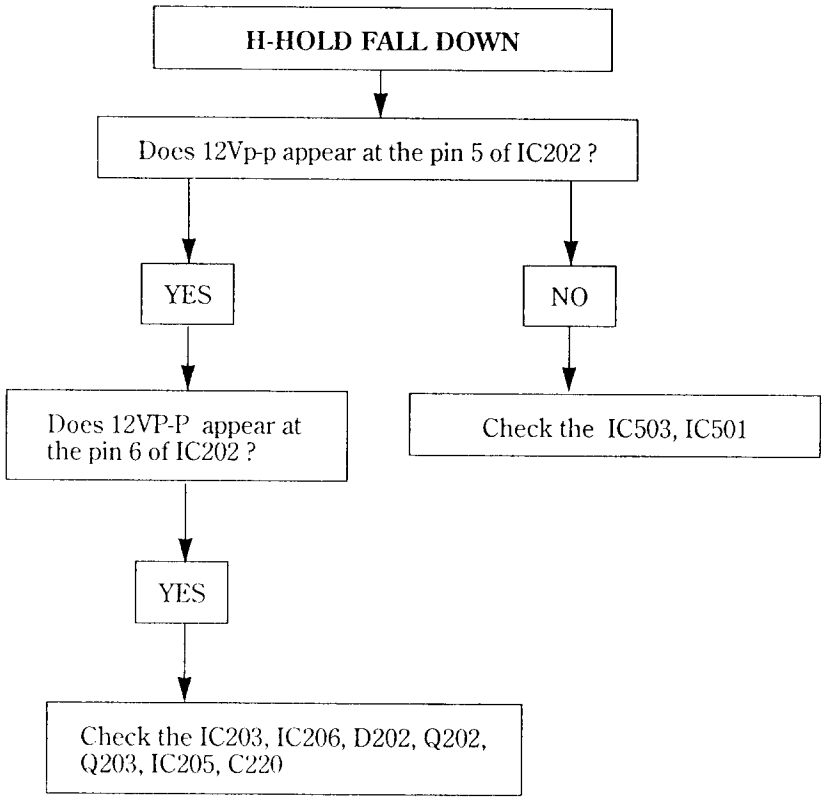

※ When the DPMS function is abnormal,
Check the IC501, Q153, Q151, Q101, Q102, Q103, ISO101, ISO102, ISO103

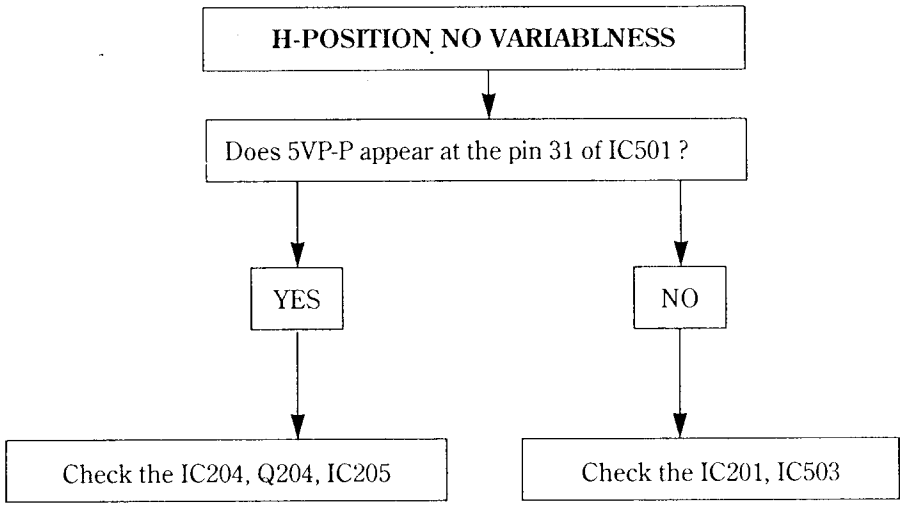
H-POSITION NO VARIABLNESS
Does 5VP-P appear at the pin 31 of IC501 ?
YES
NO
Check the IC204, Q204, IC205
Check the IC201, IC503

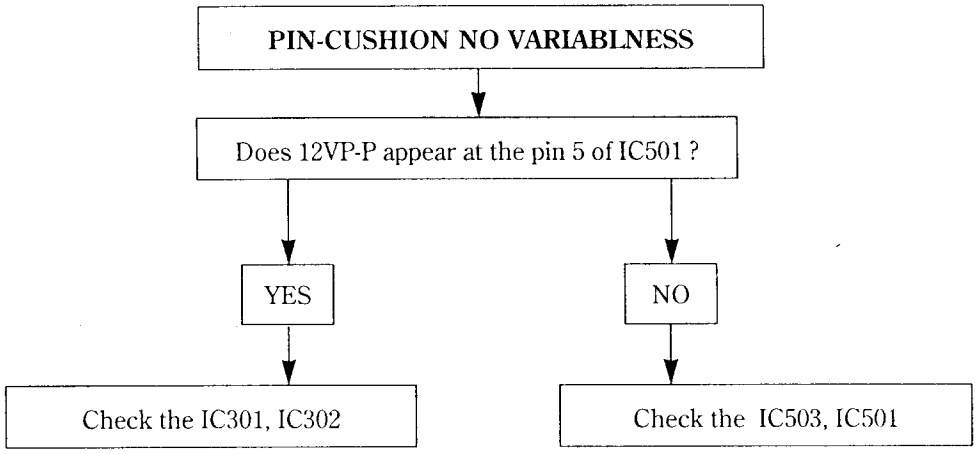
PIN-CUSHION NO VARIABLNESS
Does 12VP-P appear at the pin 5 of IC501 ?
YES
NO
Check the IC301, IC302
Check the IC503, IC501

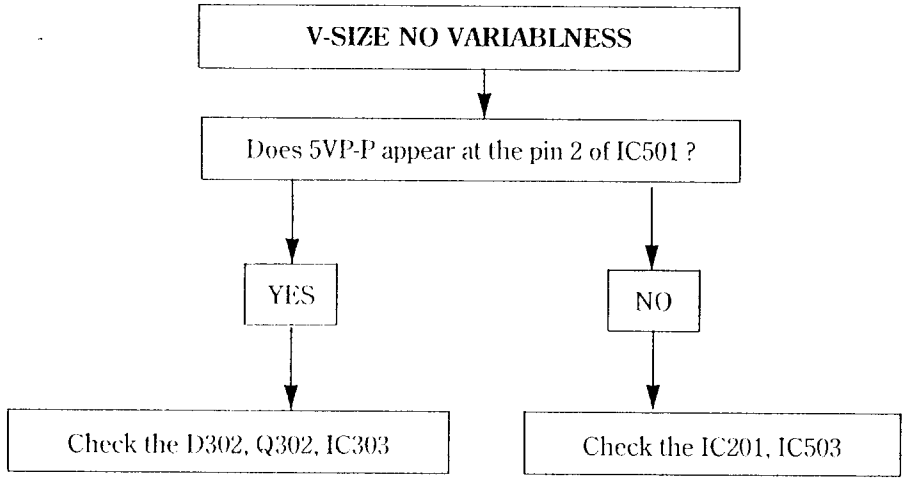
V-SIZE NO VARIABLNESS
Does 5VP-P appear at the pin 2 of IC501 ?
YES
NO
Check the D302, Q302, IC303
Check the IC201, IC503

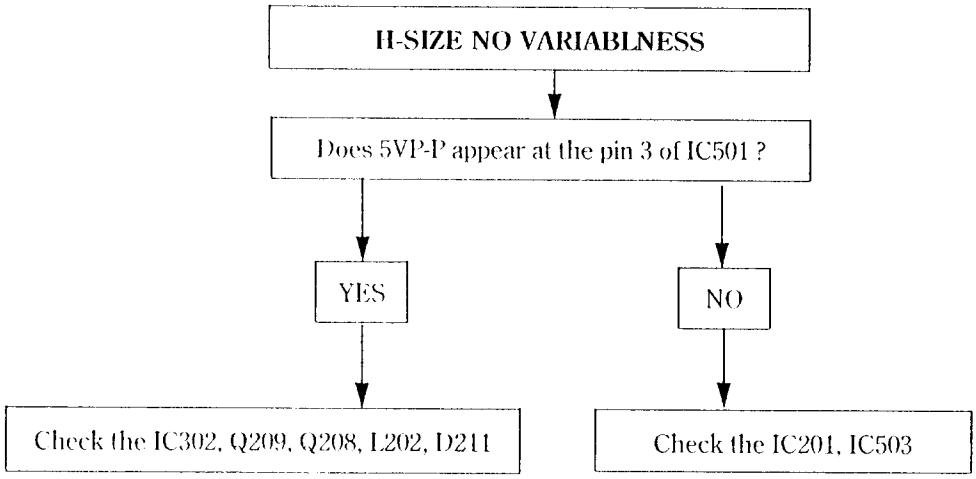
H-SIZE NO VARIABLNESS
Does 5VP-P appear at the pin 3 of IC501 ?
YES
NO
Check the IC302, Q209, Q208, L202, D211
Check the IC201, IC503

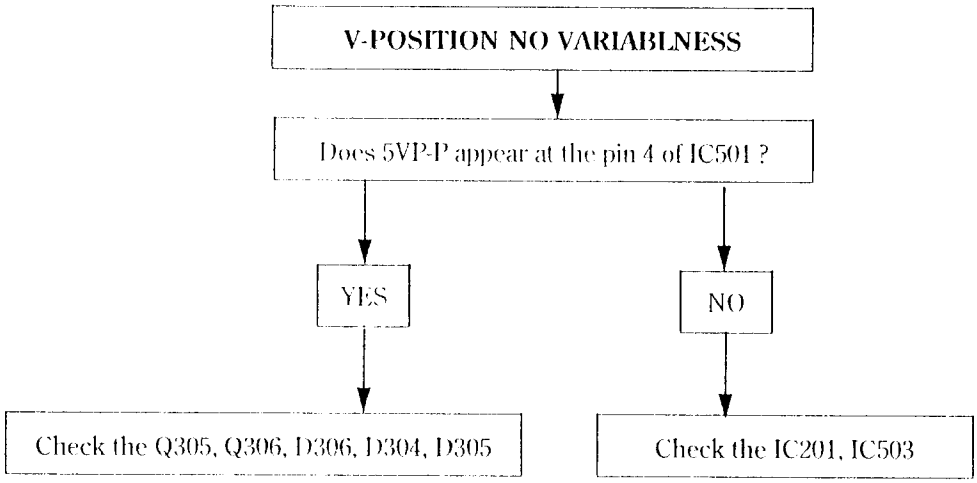
V-POSITION NO VARIABLNESS
Does 5VP-P appear at the pin 4 of IC501 ?
YES
NO
Check the Q305, Q306, D306, D304, D305
Check the IC201, IC503

SCHEMATIC DIAGRAM

MODEL NO ; SM583

DATE ; 1995 . 4 . 21

WARNING : THIS EQUIPMENT CONTAINS SAFETY CRITICAL COMPONENTS. ALL PARTS SHOWN THE ⚠ MARKS OF THE SCHEMATIC ARE SAFETY CRITICAL. FOR CONTINUED SAFETY REPLACE SAFETY CRITICAL COMPONENTS ONLY WITH MANUFACTURER S RECOMMENDED EXACT REPLACEMENTS.

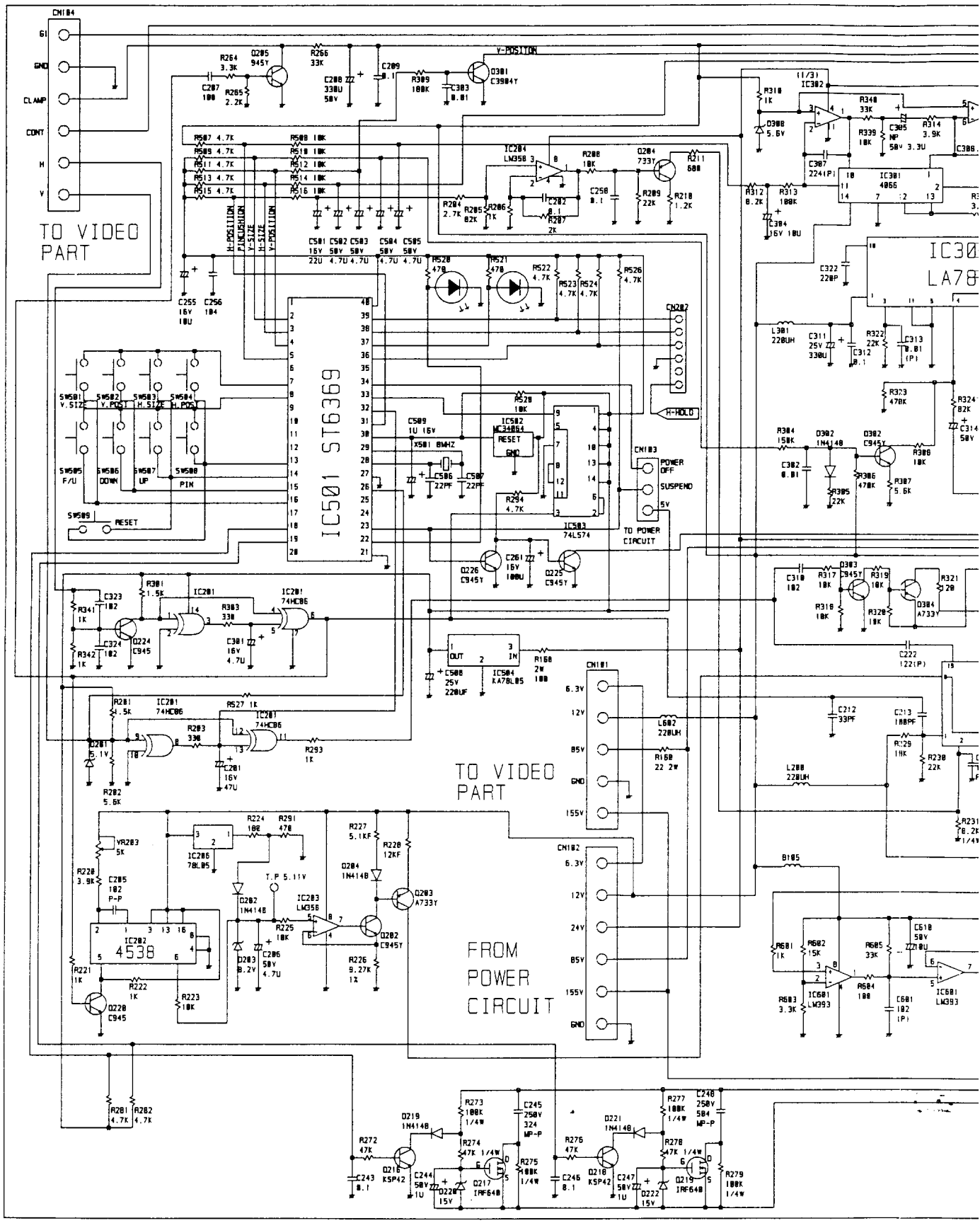

FETY CRITICAL
MARKS OF THE
ONTINUED SAFETY
NLY WITH MANUFACTURER

-NOTE-

1. RESISTOR VALUES ARE IN (OHM) , K=1000 , M=1000000
2. ALL RESISTOR ARE 1/8W EXEPT WHERE OTHERWISE INDICATED
3. ALL CAPACITOR ARE 50V EXEPT WHERE OTHERWISE INDICATED
4. CAPACITOR VALUES ARE UF UNLESS OTHERWISE INDICATED
   UF = 10^{-6}F
5. SEPERATE GROUND LEVEL FOR SAFETY OPERATION
   (⏚) IS PRIMARY POWER GROUND
   (⏚) IS SECONDARY SIGNAL GROUND

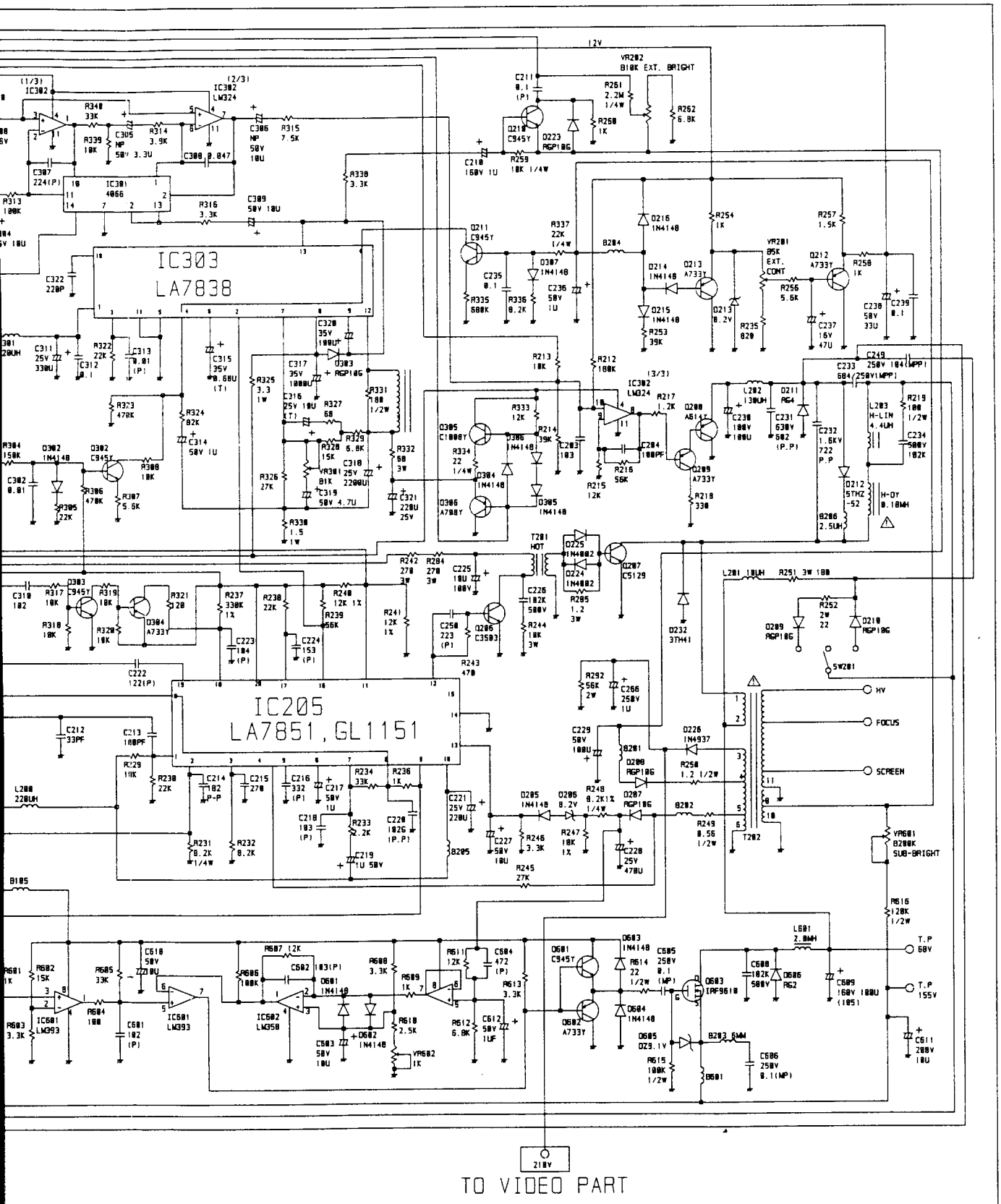

TO VIDEO PART

SCHEMATIC DIAGRAM

MODEL NO : SM583

DATE : 1995 . 4 . 21

WARNING : THIS EQUIPMENT CONTAINS SAFETY CRITICAL COMPONENTS. ALL PARTS SHOWN THE ⚠ MARKS OF THE SCHEMATIC ARE SAFETY CRITICAL. FOR CONTINUED SAFETY REPLACE SAFETY CRITICAL COMPONENTS ONLY WITH MANUFACTURER S RECOMMENDED EXACT REPLACEMENTS.

-NOTE-

1. RESISTOR VALUES ARE IN (OHM) . K=1000 . M=1000000
2. ALL RESISTOR ARE 1/8W EXEPT WHERE OTHERWISE INDICATED
3. ALL CAPACITOR ARE 50V EXEPT WHERE OTHERWISE INDICATED
4. CAPACITOR VALUES ARE UF UNLESS OTHERWISE INDICATED
   UF = 10-6F
5. SEPERATE GROUND LEVEL FOR SAFETY OPERATION
   (▽) IS PRIMARY POWER GROUND
   (⊥) IS SECONDARY SIGNAL GROUND

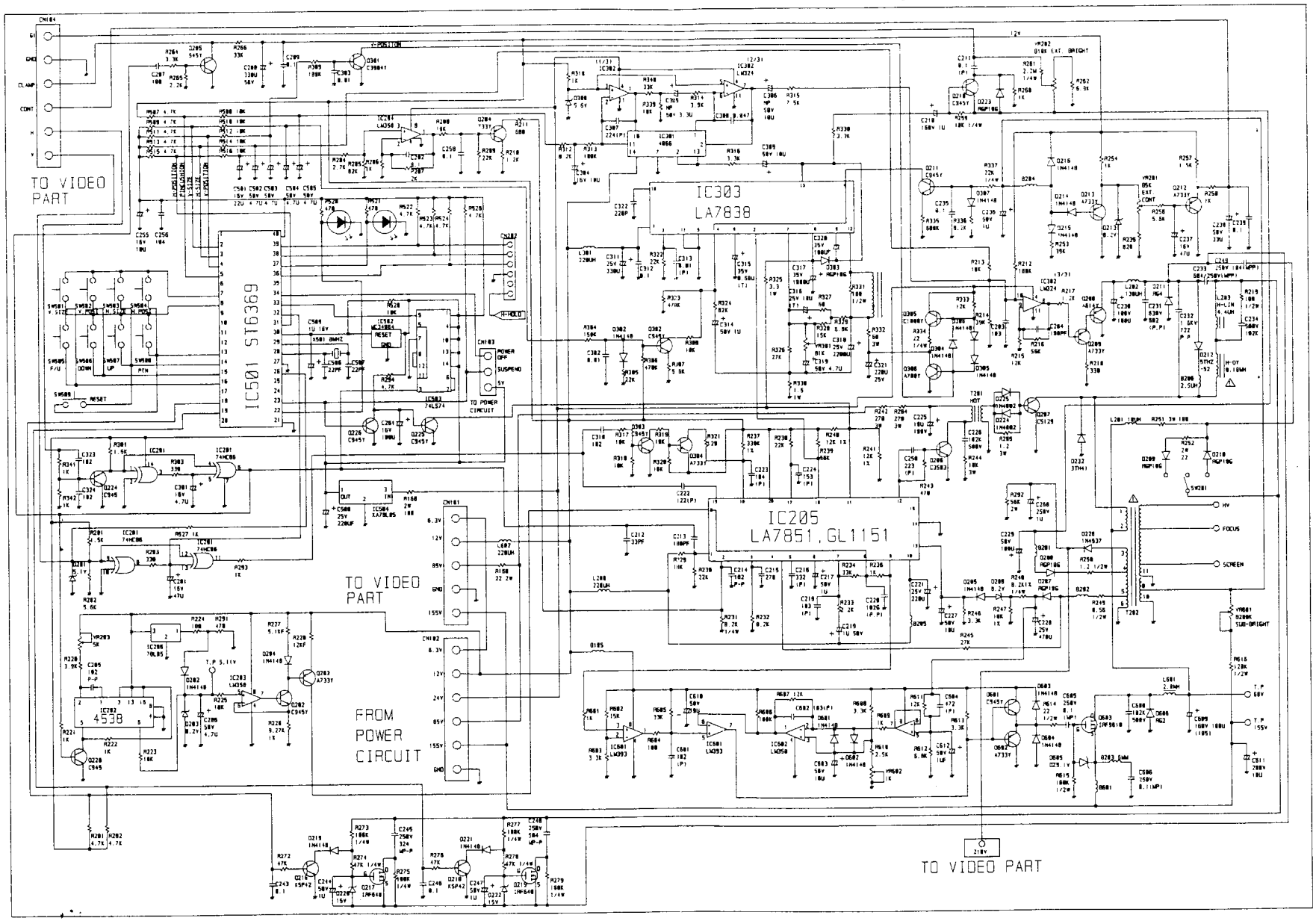

SCHEMATIC DIAGRAM

MODEL NO : SM584

DATE : 1995 . 2 . 15

WARNING : THIS EQUIPMENT CONTAINS SAFETY CRITICAL COMPONENTS. ALL PARTS SHOWN THE ⚠ MARKS OF THE SCHEMATIC ARE SAFETY CRITICAL. FOR CONTINUED SAFETY REPLACE SAFETY CRITICAL COMPONENTS ONLY WITH MANUFACTURER S RECOMMENDED EXACT REPLACEMENTS.

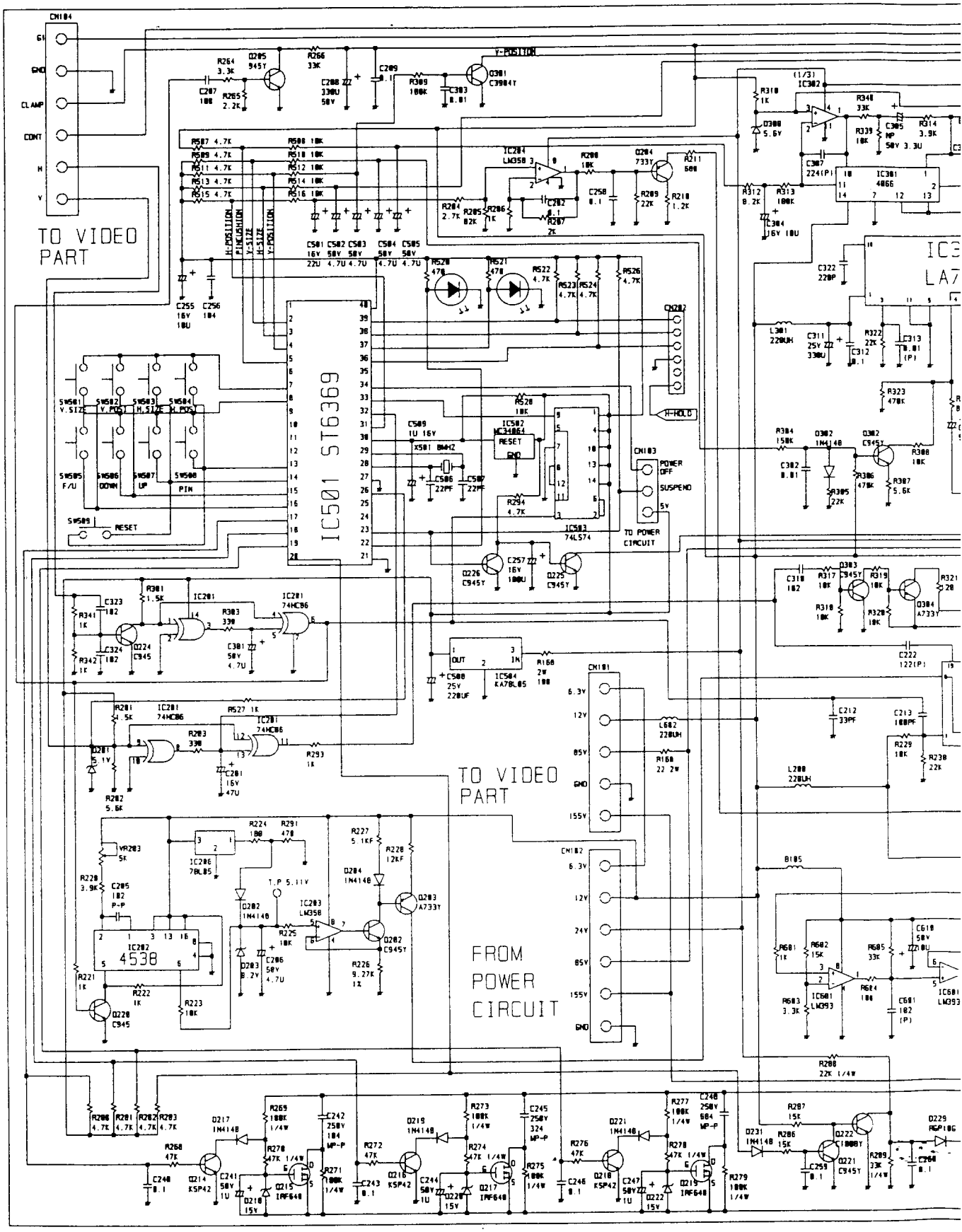

FETY CRITICAL
MARKS OF THE
ONTINUED SAFETY
NLY WITH MANUFACTURER

-NOTE-

1. RESISTOR VALUES ARE IN (OHM) , K=1000 , M=1000000
2. ALL RESISTOR ARE 1/8W EXEPT WHERE OTHERWISE INDICATED
3. ALL CAPACITOR ARE 50V EXEPT WHERE OTHERWISE INDICATED
4. CAPACITOR VALUES ARE UF UNLESS OTHERWISE INDICATED
   UF = 10^{-6}F
5. SEPERATE GROUND LEVEL FOR SAFETY OPERATION
   (▽) IS PRIMARY POWER GROUND
   (⊥) IS SECONDARY SIGNAL GROUND

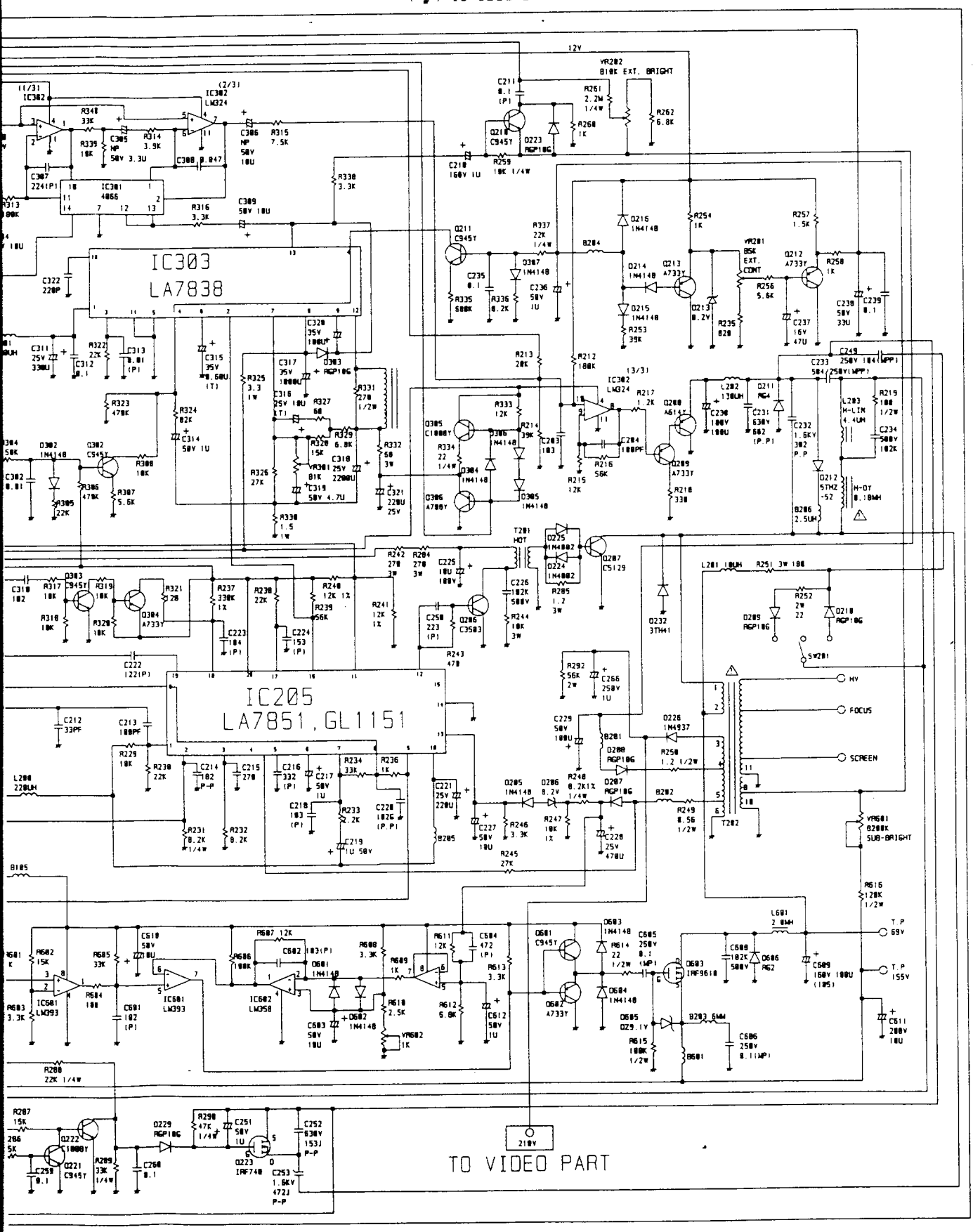

SCHEMATIC DIAGRAM

MODEL NO : SM584

DATE : 1995 . 2 . 15

WARNING : THIS EQUIPMENT CONTAINS SAFETY CRITICAL COMPONENTS. ALL PARTS SHOWN THE ⚠ MARKS OF THE SCHEMATIC ARE SAFETY CRITICAL. FOR CONTINUED SAFETY REPLACE SAFETY CRITICAL COMPONENTS ONLY WITH MANUFACTURER S RECOMMENDED EXACT REPLACEMENTS.

-NOTE-

1. RESISTOR VALUES ARE IN (OHM) . K=1000 . M=1000000
2. ALL RESISTOR ARE 1/8W EXEPT WHERE OTHERWISE INDICATED
3. ALL CAPACITOR ARE 50V EXEPT WHERE OTHERWISE INDICATED
4. CAPACITOR VALUES ARE UF UNLESS OTHERWISE INDICATED UF = 10*F
5. SEPERATE GROUND LEVEL FOR SAFETY OPERATION
   (▽) IS PRIMARY POWER GROUND
   (⊥) IS SECONDARY SIGNAL GROUND

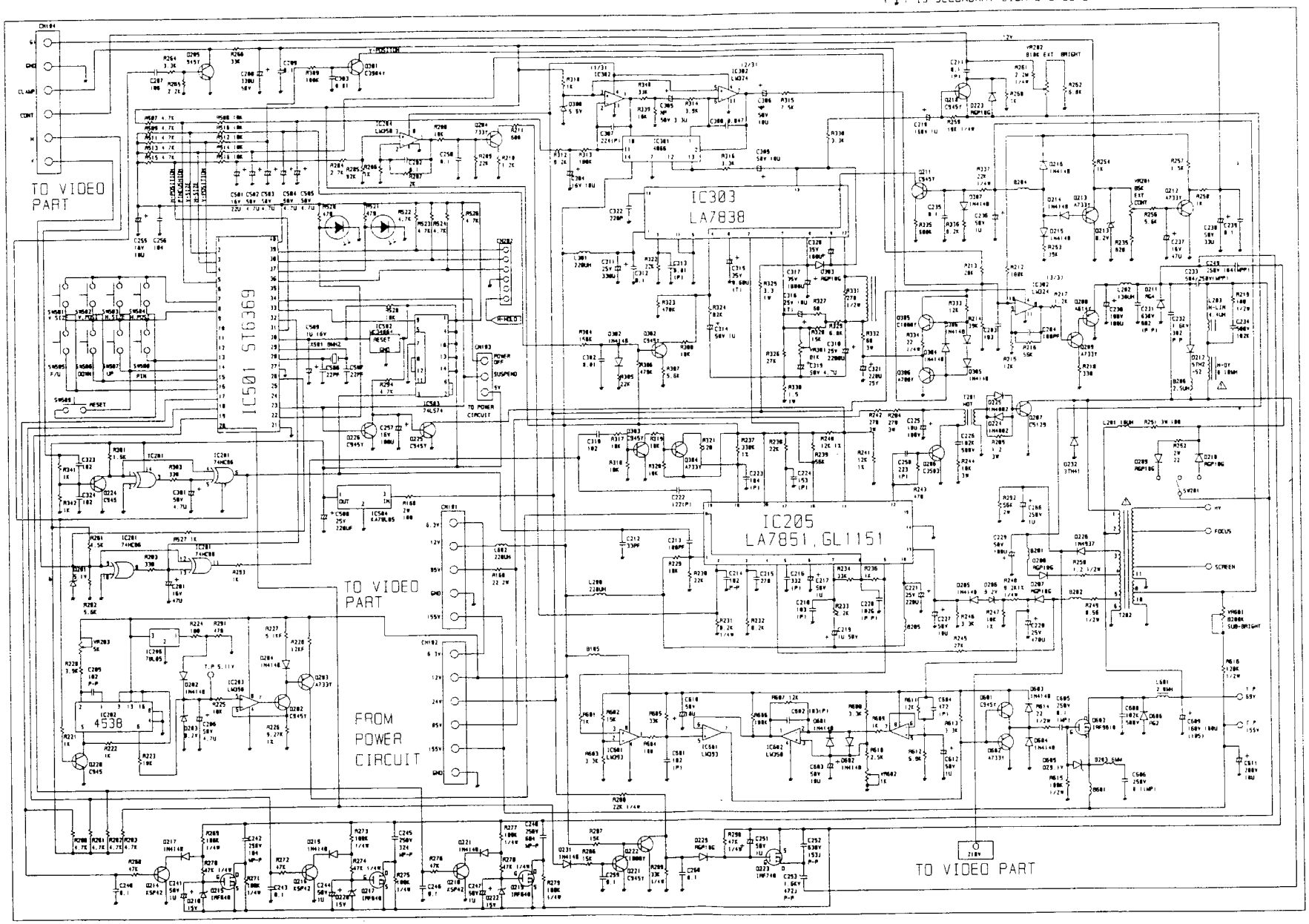

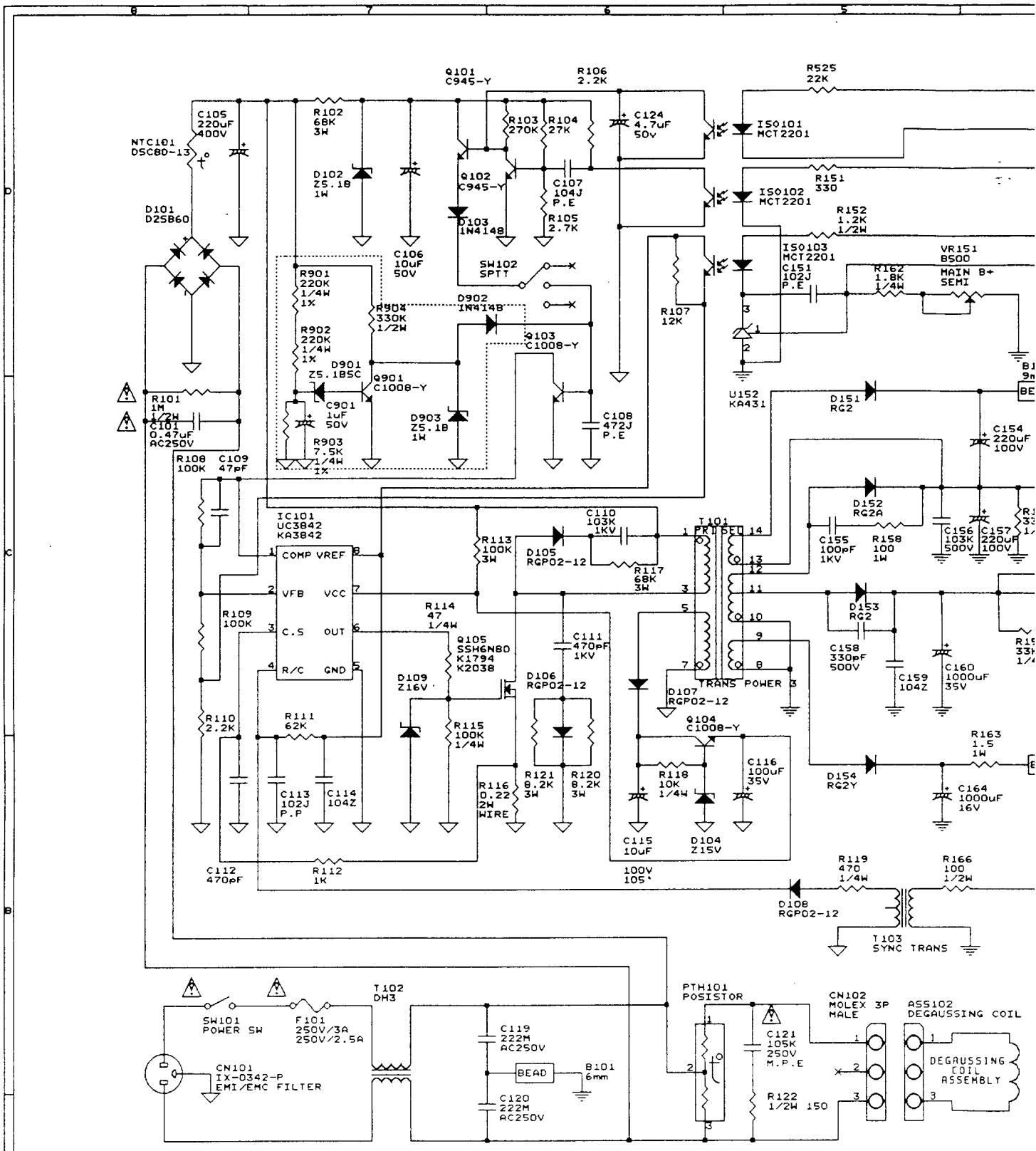

WARNING

THIS EQUIIPMENT CONTAINS SAFETY CRITICAL COMPONENTS.

ALL PARTS SHOWN THE ⚠ MARKS OF THE SCHEMATIC ARE SAFETY CRITICAL. FOR CONTINUED SAFETY REPLACE SAFETY CRITICAL COMPONENTS ONLY WITH MANUFACTURERS RECOMMENDED EXACT REPLACEMENTS.

NOTE

1. RESISTOR VALUES ARE IN OHMS. K=1000, M=1000000.
2. ALL RESISTORS ARE 1/8W EXCEPT WHERE OTHERWISE INDECA
3. ALL CAPACITORS ARE 50V EXCEPT WHERE OTHERWISE INDECA
4. CAPACITOR VALUES ARE uF UNLESS OTHERWISE INDECATED.
5. SEPERATE GROUND LEVEL FOR SAFETY OPERATION.

(⏚) IS PRIMARY POWER / (⏚) IS SECONDARY SIGNA

- P.E : POLYESTER FILM CAPACITOR
- P.P : POLYPROPYLENE FILM CAPACITOR
- M.P.E : METALLIZED POLYESTER FILM CAPACITOR
- M.P.P : METALLIZED POLYPROPYLENE FILM CAPACITOR
- C : CAPACITOR
- D : DIODE
- Q : TRNASISTOR
- R : RESISTOR
- T : TRANSFORMER
- U : IC
- Y : CRYSTAL OSCILLATOR
- CN : CONNECTOR
- ASS
- ISO
- PTH
- NTH

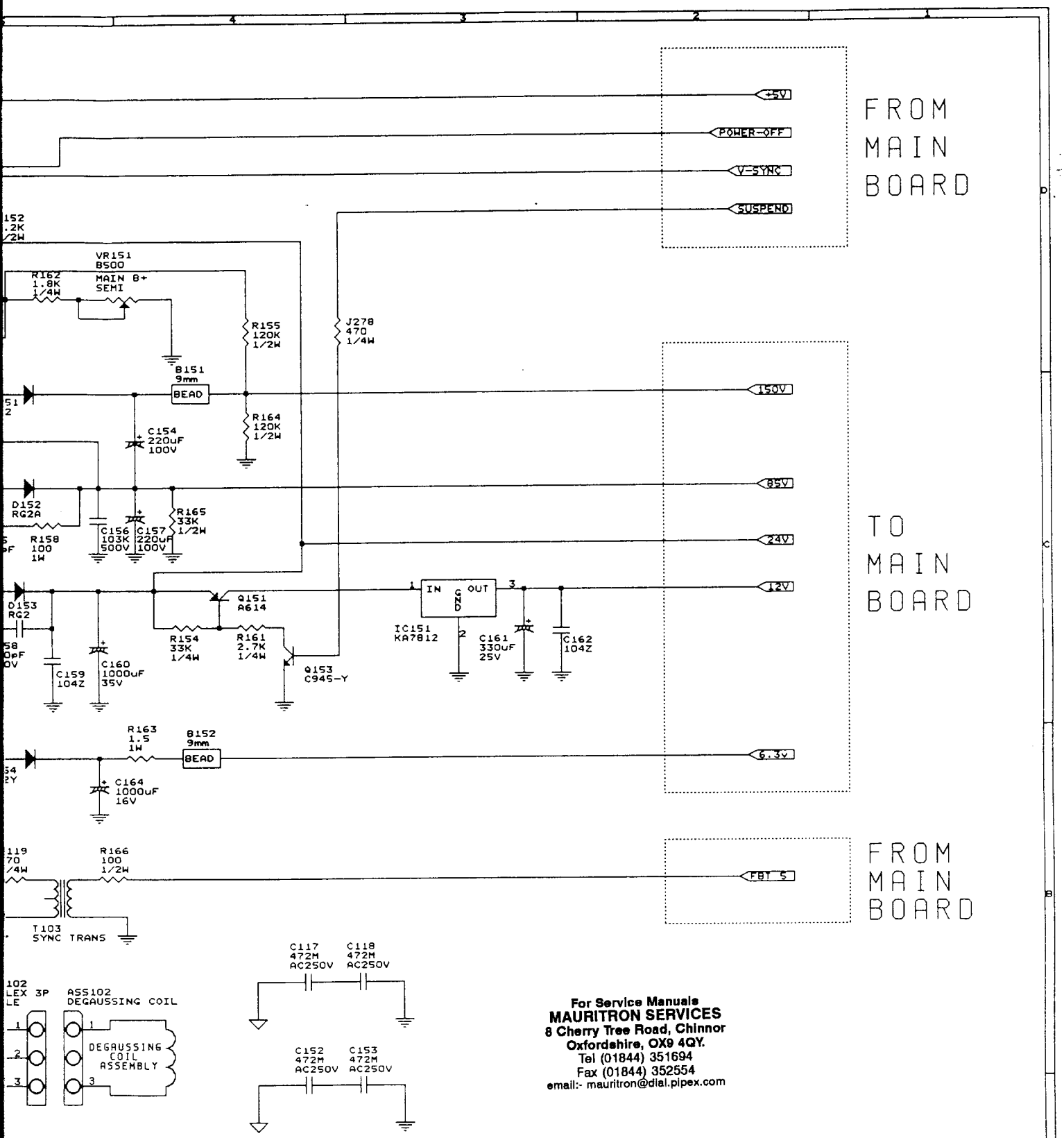

For Service Manuals
MAURITRON SERVICES
8 Cherry Tree Road, Chinnor
Oxfordshire, OX9 4QY.
Tel (01844) 351694
Fax (01844) 352554
email:- mauritron@dial.pipex.com

OTE

. K=1000, M=1000000.

PT WHERE OTHERWISE INDECATED.

PT WHERE OTHERWISE INDECATED.

ESS OTHERWISE INDECATED.

AFETY OPERATION.

< ⊥ > IS SECONDARY SIGNAL GROUND.

NER
OSCILLATOR
R

- ASS : ASS'Y
- ISO : OPTO ISOLATOR
- PTH : POSITIVE THERMISTOR
- NTH : NEGATIVE THERMISTOR

REMARKS

< THE SPECIFIC LOCATION-NUMBER'S ORDER >

- 100 - 149 : PRIMARY POWER CIRCUIT
- 150 - 199 : SECONDARY POWER CIRCUIT
- 200 - 299 : HORIZONTAL CIRCUIT
- 300 - 399 : VERTICAL CIRCUIT
- 400 - 499 : VIDEO CIRCUIT
- 500 - 599 : MODE SELECT CIRCUIT
- 600 - 699 : RESERVED
- 700 - 799 : RESERVED
- 800 - 899 : RESERVED
- 900 - 999 : CIRCUIT FOR DOMESTIC PRODUCTS

SHIN-HO TECH, CO., LTD.
R&D CENTER
46-2, SAMKYE-RI, POGOK-MYUN,
YONGIN-KUN, KYOUNGKI-DO, KOREA
DESIGNED BY KT, KANG

Title	15" DIGITAL MONITOR POWER CKT	
Size C	Document Number S84POWER.SCH	REV A
Date: February 22, 1995	Sheet 2 of 2	

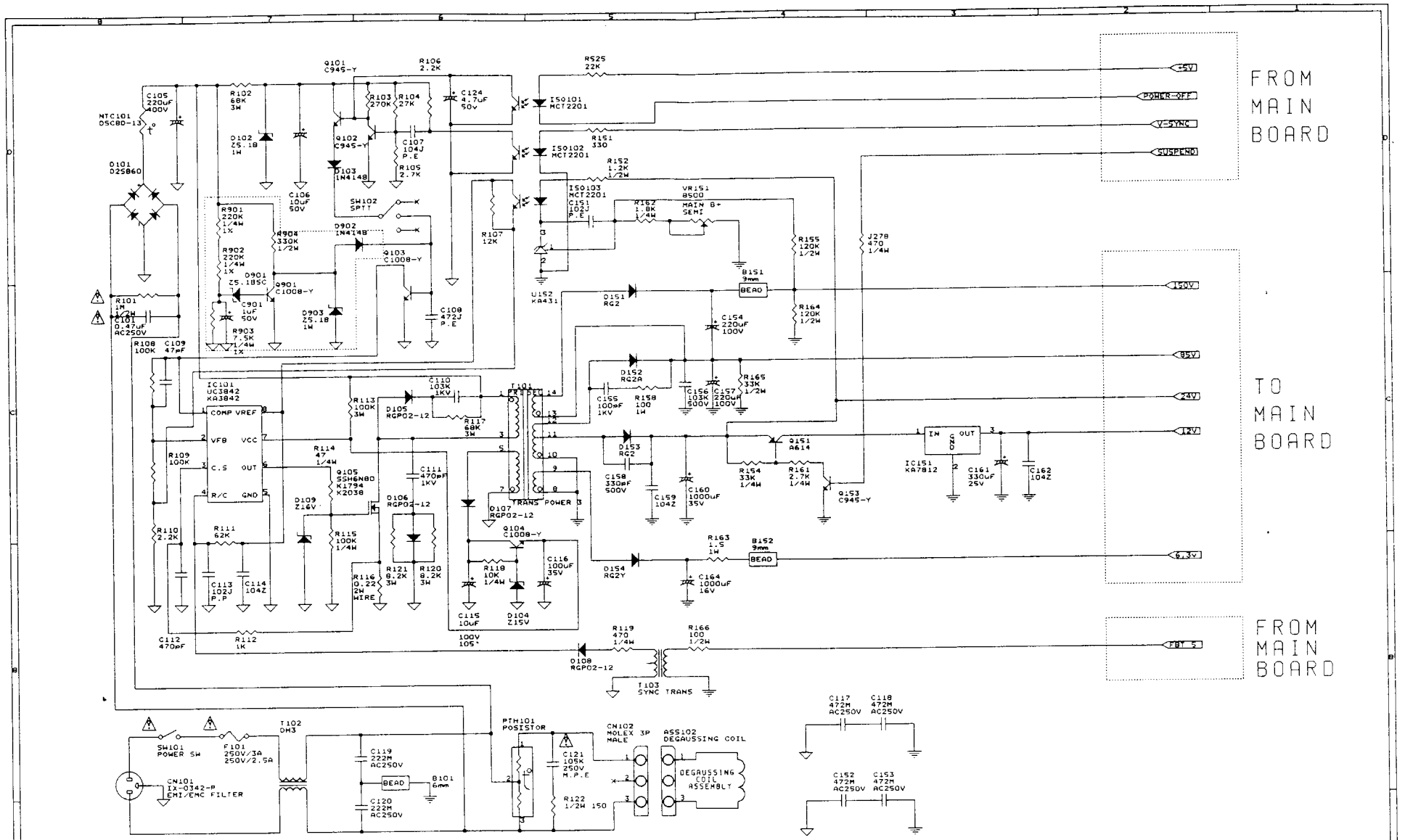

WARNING

THIS EQUIIPMENT CONTAINS SAFETY CRITICAL COMPONENTS.

ALL PARTS SHOWN THE ⚠ MARKS OF THE SCHEMATIC ARE SAFETY CRITICAL. FOR CONTINUED SAFETY REPLACE SAFETY CRITICAL COMPONENTS ONLY WITH MANUFACTURERS RECOMMENDED EXACT REPLACEMENTS.

NOTE

1. RESISTOR VALUES ARE IN OHMS. K=1000, M=1000000.
2. ALL RESISTORS ARE 1/8W EXCEPT WHERE OTHERWISE INDECATED.
3. ALL CAPACITORS ARE 50V EXCEPT WHERE OTHERWISE INDECATED.
4. CAPACITOR VALUES ARE uF UNLESS OTHERWISE INDECATED.
5. SEPERATE GROUND LEVEL FOR SAFETY OPERATION.

(⏚) IS PRIMARY POWER / (⏚) IS SECONDARY SIGNAL GROUND.

REMARKS

(THE SPECIFIC LOCATION-NUMBER'S ORDER)

- 100 - 149 : PRIMARY POWER CIRCUIT
- 150 - 199 : SECONDARY POWER CIRCUIT
- 200 - 299 : HORIZONTAL CIRCUIT
- 300 - 399 : VERTICAL CIRCUIT
- 400 - 499 : VIDEO CIRCUIT
- 500 - 599 : MODE SELECT CIRCUIT
- 600 - 699 : RESERVED
- 700 - 799 : RESERVED
- 800 - 899 : RESERVED
- 900 - 999 : CIRCUIT FOR DOMESTIC PRODUCTS

- P.E : POLYESTER FILM CAPACITOR
- P.P : POLYPROPYLENE FILM CAPACITOR
- M.P.E : METALLIZED POLYESTER FILM CAPACITOR
- M.P.P : METALLIZED POLYPROPYLENE FILM CAPACITOR
- C : CAPACITOR
- D : DIODE
- Q : TRNASISTOR
- R : RESISTOR
- T : TRANSFORMER
- U : IC
- Y : CRYSTAL OSCILLATOR
- CN : CONNECTOR
- ASS : ASS'Y
- ISO : OPTO ISOLATOR
- PTH : POSITIVE THERMISTOR
- NTH : NEGATIVE THERMISTOR

SHIN-HO TECH, CO., LTD.
R&D CENTER
46-2, SAMKYE-RI, POGOK-MYUN,
YONGIN-KUN, KYOUNGKI-DO, KOREA
DESIGNED BY KT, KANG

Title: 15" DIGITAL MONITOR POWER CKT

Size: C | Document Number: 584POWER.SCH | REV: A

Date: February 22, 1995 | Sheet 2 of 2

SM584-VID

MAIN BOARD

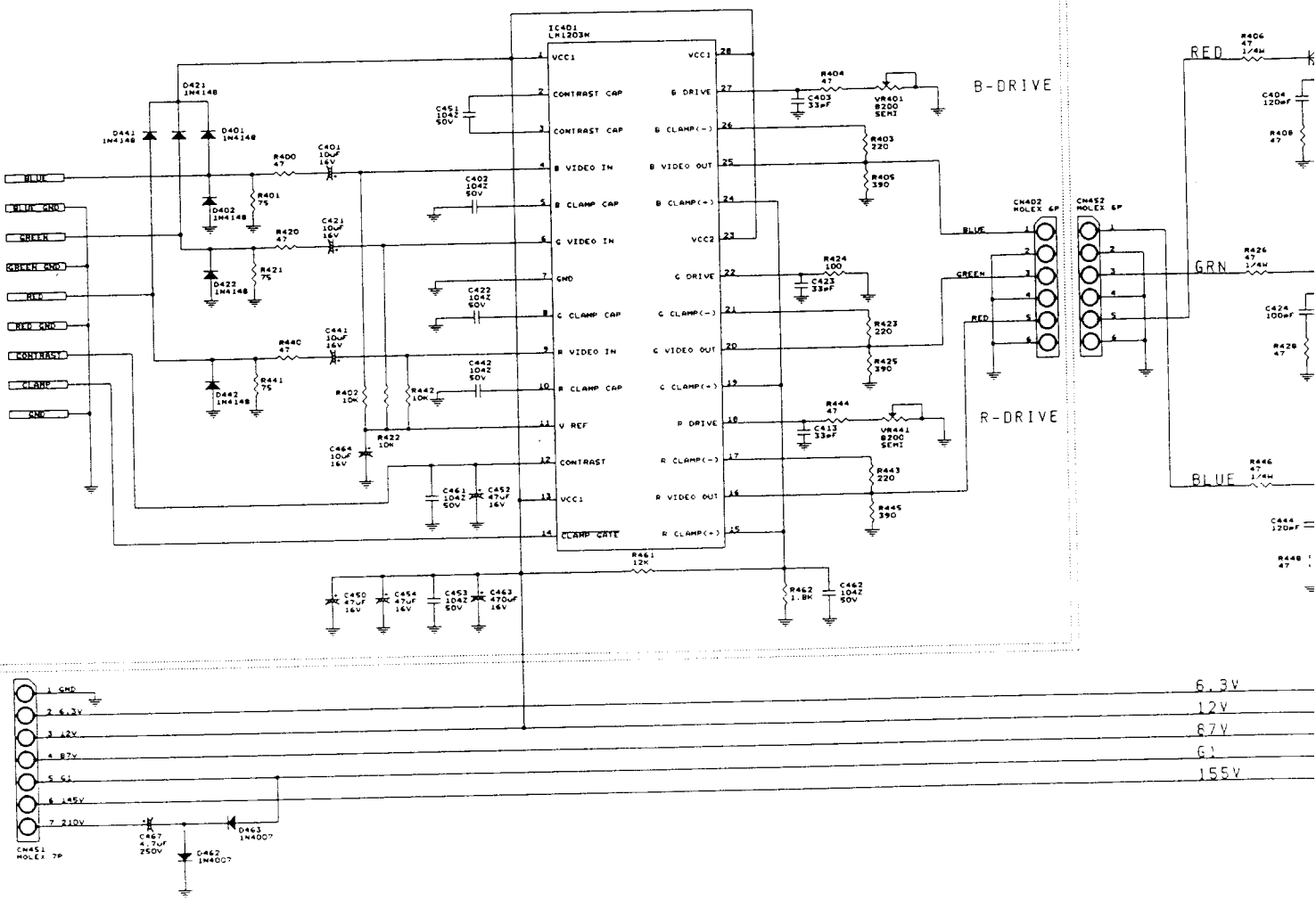

수 의 사 항

1. 저항값은 ohm 단위로 표시되며 K=1000, M=1000000을 나타낸다
2. 특별히 표시된 것을 제외하곤 모든 저항은 1/6W 로 사용된다
3. 콘덴서는 특별히 표시된 것을 제외하곤 세라믹 콘덴서가 사용되며 내압은 50V이다
4. 회로도에 표시된 기호중 ⏚ 는 1차 접지임을 나타내며 ⏚ 는 2차 아날로그 접지를 ⏚ 는 2차 디지탈 접지를 나타낸다
5. 회로도에 표시된 약어는 아래와 같은 의미를 나타낸다

- P.E : POLYESTER FILM CAPACITOR
- P.P : POLYPROPYLENE FILM CAPACITOR
- M.P.E : METALLIZED POLYESTER FILM CAPACITOR
- M.P.P : METALLIZED POLYPROPYLENE FILM CAPACITOR
- C : CAPACITOR
- D : DIODE
- Q : TRANSISTOR
- R : RESISTOR
- T : TRANSFORMER
- U : IC
- Y : CRYSTAL OSCILLATOR
- CN : CONNECTOR
- ASS : ASS'Y
- ISO : OPTO ISOLATOR
- PTH : POSITIVE THERMISTOR
- NTH : NEGATIVE THERMISTOR

(THE SPECIFIC LOCATION-NUMBER'S ORDER)

- 100 - 149 : PRIMARY POWER CIRCUIT
- 150 - 199 : SECONDARY POWER CIRCUIT
- 200 - 299 : HORIZONTAL CIRCUIT
- 300 - 399 : VERTICAL CIRCUIT
- 400 - 499 : VIDEO CIRCUIT
- 500 - 599 : MODE SELECT CIRCUIT
- 600 - 699 : RESERVED
- 700 - 799 : RESERVED
- 800 - 899 : RESERVED
- 900 - 999 : CIRCUIT FOR DOMESTIC PRODUCTS

VIDEO

VIDEO BOARD

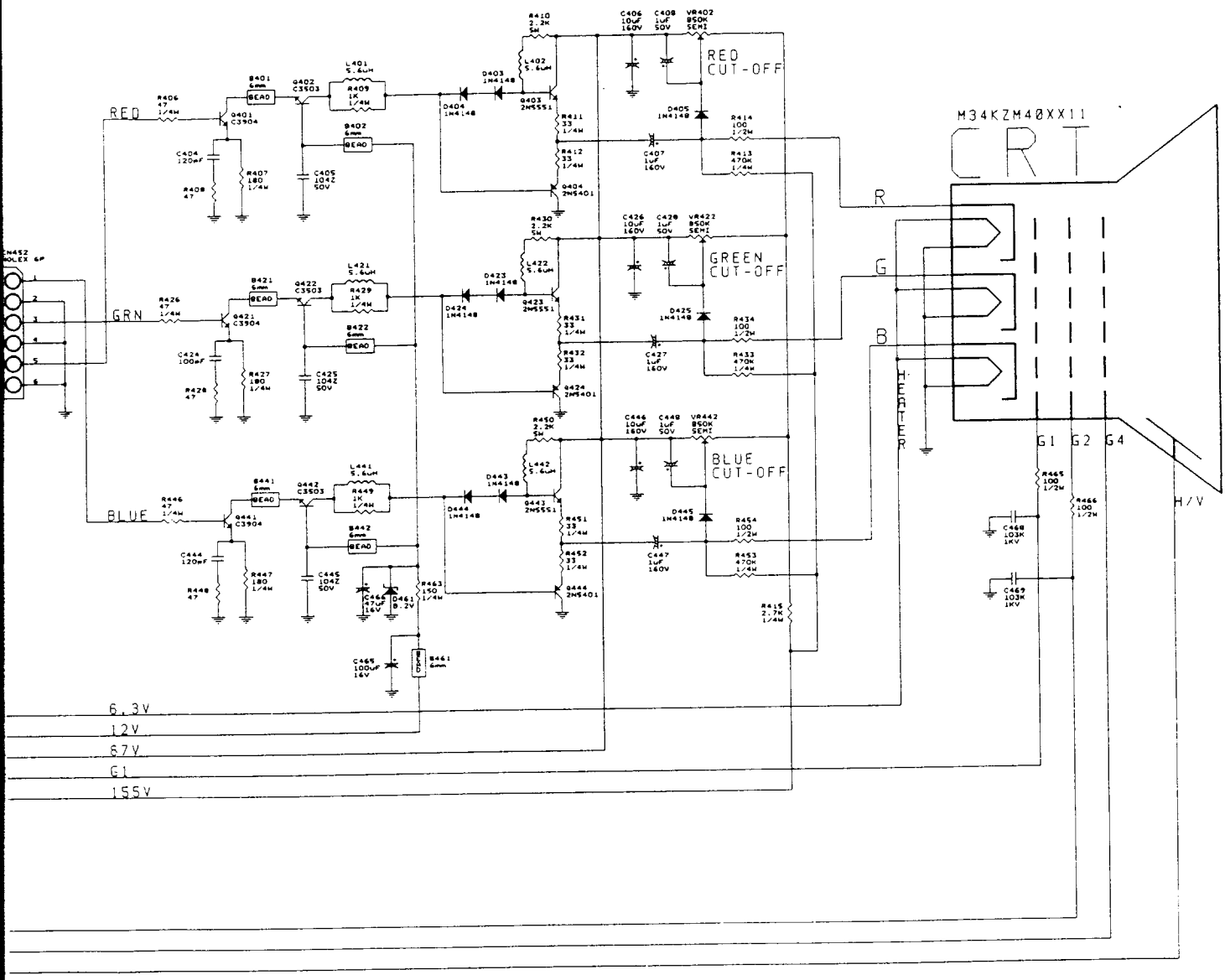

	DRAW BY	DESIGN BY	CHECK BY	APP'L BY
	199 . . .	199 . . .	199 . . .	199 . . .
PECIFIC LOCATION-NUMBER'S ORDER)				

149 : PRIMARY POWER CIRCUIT
199 : SECONDARY POWER CIRCUIT
299 : HORIZONTAL CIRCUIT
399 : VERTICAL CIRCUIT
499 : VIDEO CIRCUIT
599 : MODE SELECT CIRCUIT
699 : RESERVED
799 : RESERVED
899 : RESERVED
999 : CIRCUIT FOR DOMESTIC PRODUCTS

SHIN-HO TECH. CO., LTD.
R&D CENTER
46-2, SANKYE-RI, POCOK-MYUN,
YONGIN-KUN, KYONGGI-DO, KOREA
DESIGNED BY TAE-HUN, KIM

Title: SM584 MODEL VIDEO CRT

Size: D | Document Number: SM584-V.SCH | REV: A

Date: February 22, 1995 | Sheet 1 of 1

SM584-VIDEO

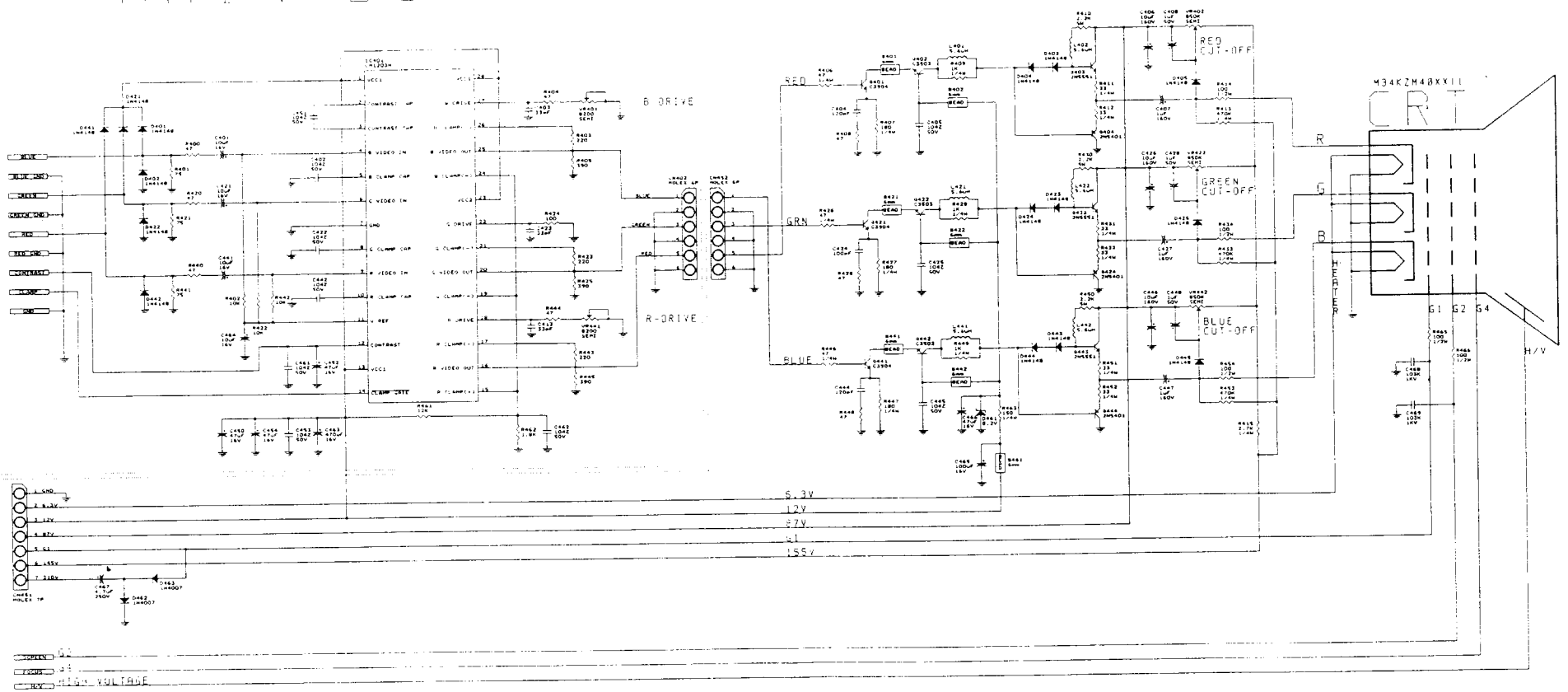

수 의 사 항

1. 저항값은 ohm 단위로 표시되며 K=1000, M=1000000을 나타낸다
2. 특별히 표시된 것을 제외하곤 모든 저항은 1/6W 로 사용한다
3. 콘덴서는 특별히 표시된 것을 제외하곤 세라믹 콘덴서가 사용되며 내압은 50V이다
4. 회로도에 표시된 기호중 ⏚ 는 1차 접지점을 나타내며 ⏚ 는 2차 바닥프레임 접지를 ⏚ 는 2차 디지탈 접지를 나타낸다
5. 회로도에 표시된 약어는 아래와 같은 의미를 나타낸다

: P.E : POLYESTER FILM CAPACITOR
: P.P : POLYPROPYLENE FILM CAPACITOR
: M.P.E : METALLIZED POLYESTER FILM CAPACITOR
: M.P.P : METALLIZED POLYPROPYLENE FILM CAPACITOR
: C : CAPACITOR
: D : DIODE
: Q : TRANSISTOR
: R : RESISTOR
: T : TRANSFORMER
: IC : IC
: X : CRYSTAL OSCILLATOR
: CN : CONNECTOR
: ABS : ABS'V
: IS0 : OPTO ISOLATOR
: PTH : POSITIVE THERMISTOR
: NTH : NEGATIVE THERMISTOR

(THE SPECIFIC LOCATION-NUMBER'S ORDER)

: 100 - 119 : PRIMARY POWER CIRCUIT
: 150 - 199 : SECONDARY POWER CIRCUIT
: 200 - 249 : HORIZONTAL CIRCUIT
: 300 - 349 : VERTICAL CIRCUIT
: 400 - 499 : VIDEO CIRCUIT
: 500 - 549 : RESERVED
: 600 - 649 : RESERVED
: 700 - 749 : RESERVED
: 800 - 849 : RESERVED
: 900 - 999 : CIRCUIT FOR DOMESTIC PRODUCTS

DRAW BY	DESIGN BY	CHECK BY	APP'L BY
199 . . .	199 . . .	199 . . .	199 . . .

SAMSUNG TECH. CO., LTD.
R&D CENTER
48-1, SANGYE-RI, POGOK-MYUN,
YONGIN-GUN, KYONGGI-DO, KOREA
DESIGNED BY TAE-HWA, KIM

TITLE: SM584 MODEL VIDEO CRT

SIZE: D | DOCUMENT NUMBER: SM584-V.SCH | REV: A

DATE: February 22, 1996 Sheet | of

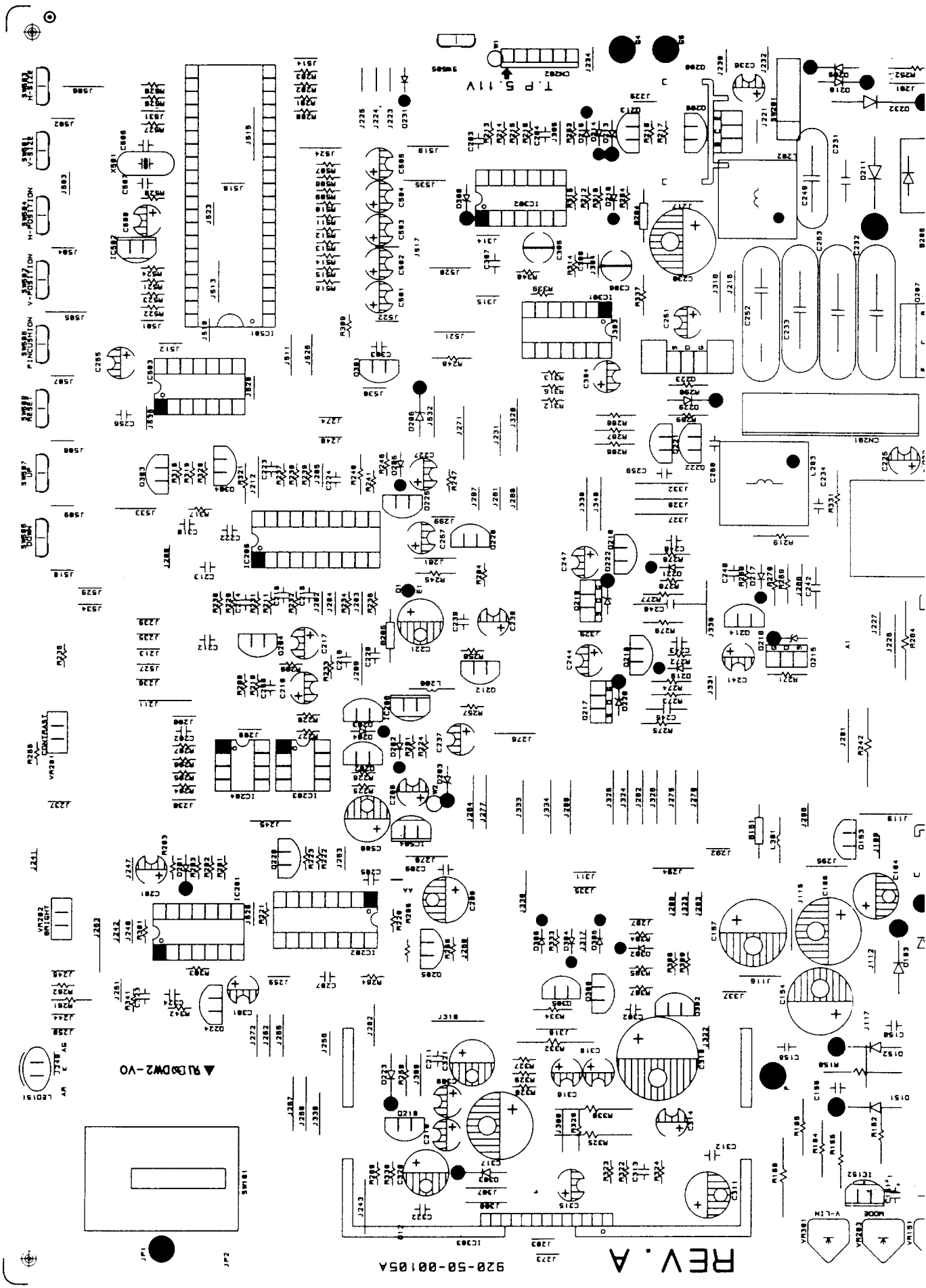
REV. A
920-50-00105A
T.P 5.11V
H-SIZE
V-SIZE
H-POSITION
V-POSITION
PINCUSHION
SWOP RESET
SWOP UP
SWOP DOWN
CONTRAST
BRIGHT
V-LIN
MODE

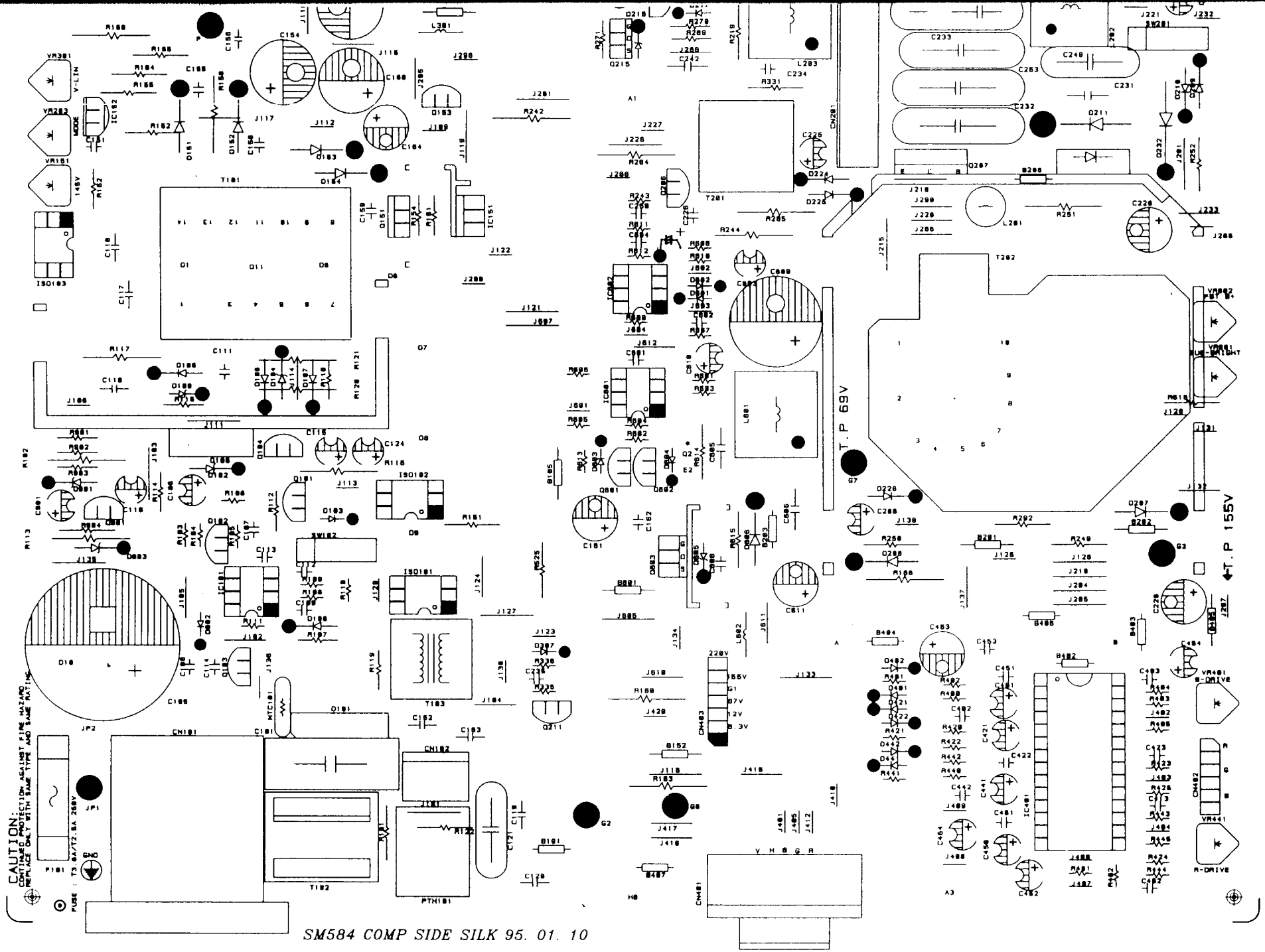

SM584 COMP SIDE SILK 95. 01. 10

SM584 COMP SIDE SILK 95. 01. 10
CAUTION:
T.P 155V
T.P 69V
T.P 5.11V
REV. A
920-59-00185A
▲BLOCK2-V0

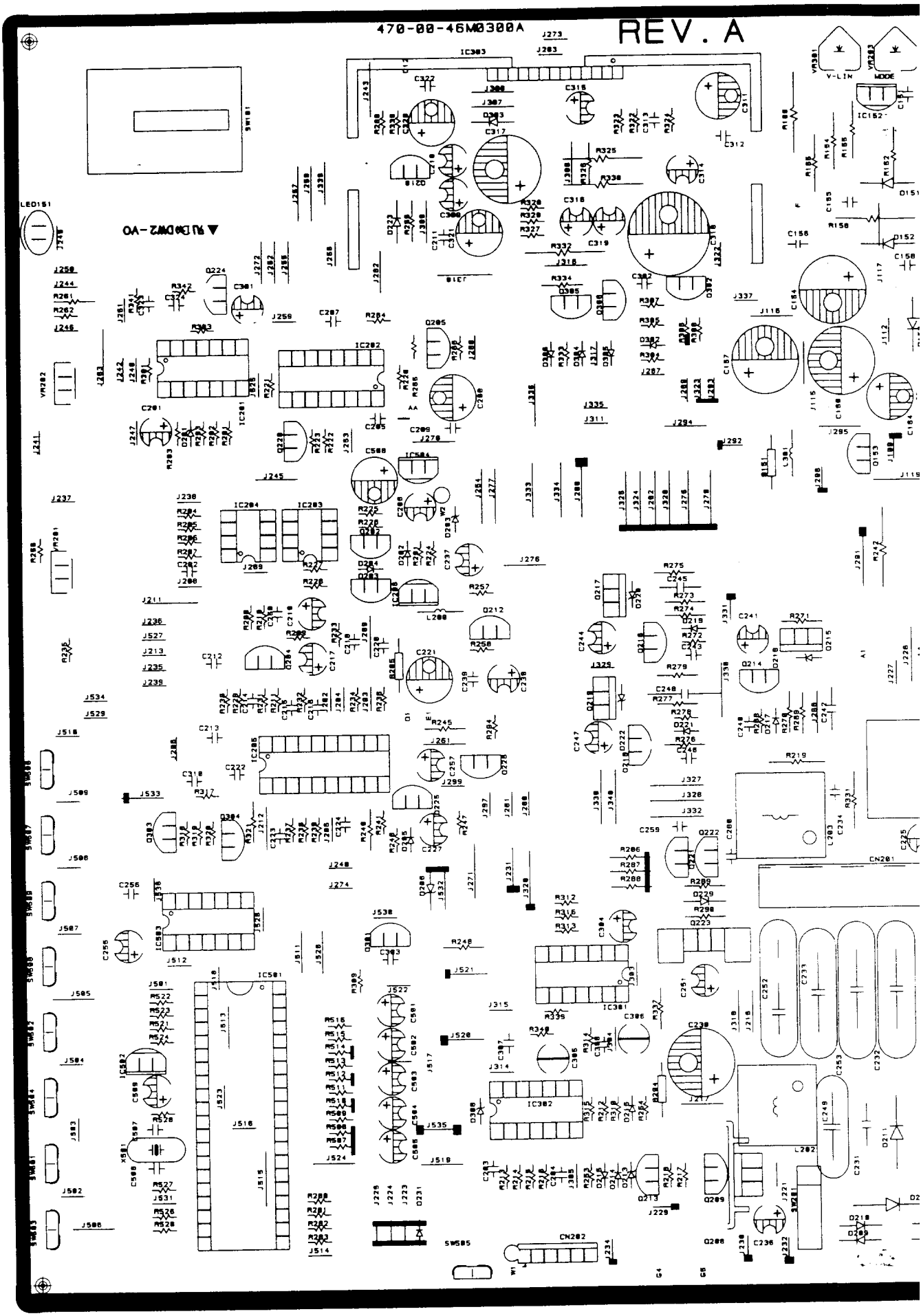
470-00-46M0300A
REV. A

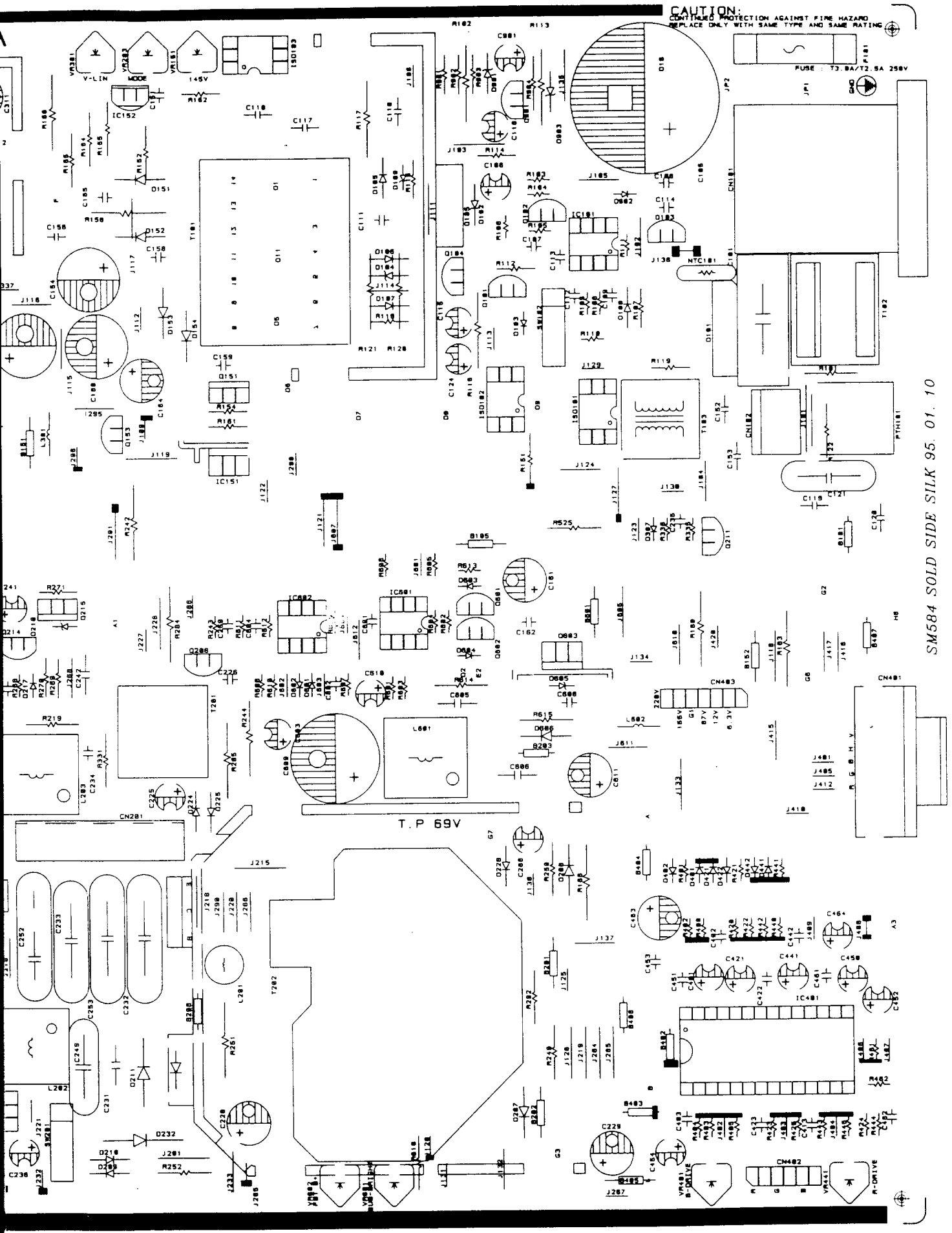
CAUTION:
CONTINUED PROTECTION AGAINST FIRE HAZARD
REPLACE ONLY WITH SAME TYPE AND SAME RATING
FUSE : T3.8A/T2.5A 250V
V-LIN
MODE
145V
T.P 69V
SM584 SOLD SIDE SILK 95. 01. 10

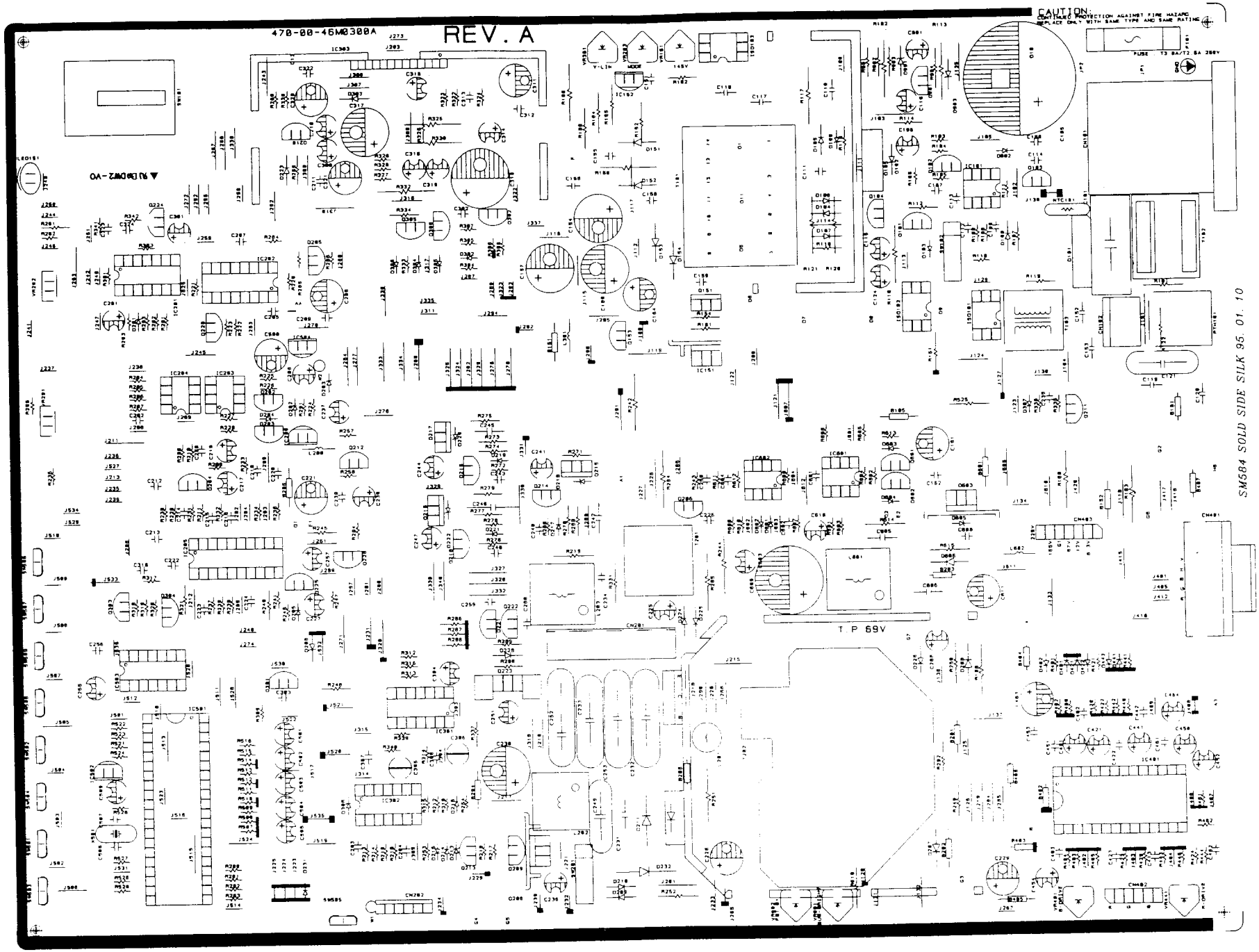
470-00-46M0300A
REV. A
CAUTION:
FOR FIRE PROTECTION AGAINST FIRE HAZARD
REPLACE ONLY WITH SAME TYPE AND SAME RATING
FUSE T3.15A/T2.5A 250V
T P 69V
SM584 SOLD SIDE SILK 95. 01. 10

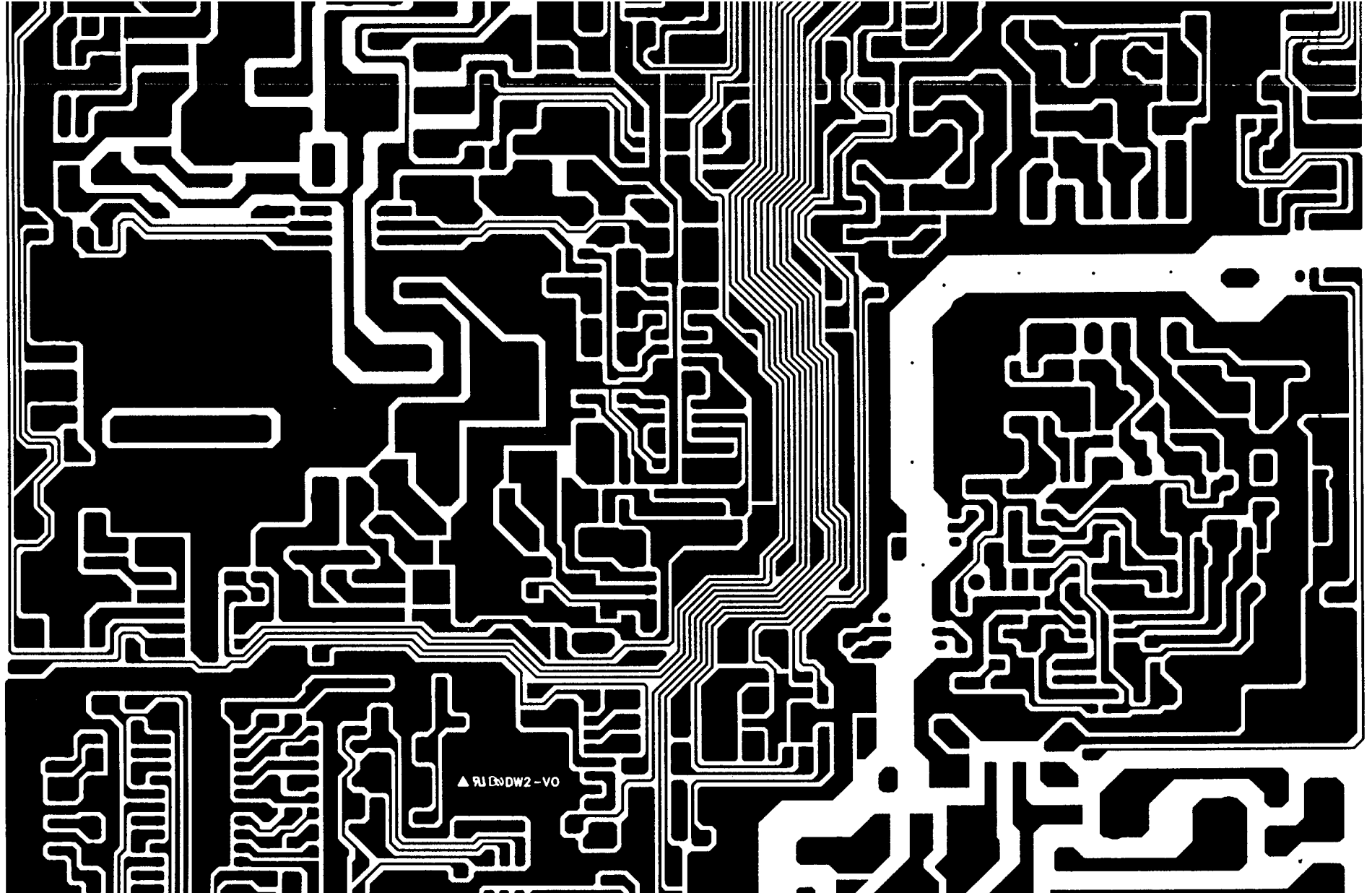

SM584 SOLD SIDE 95. 01. 11

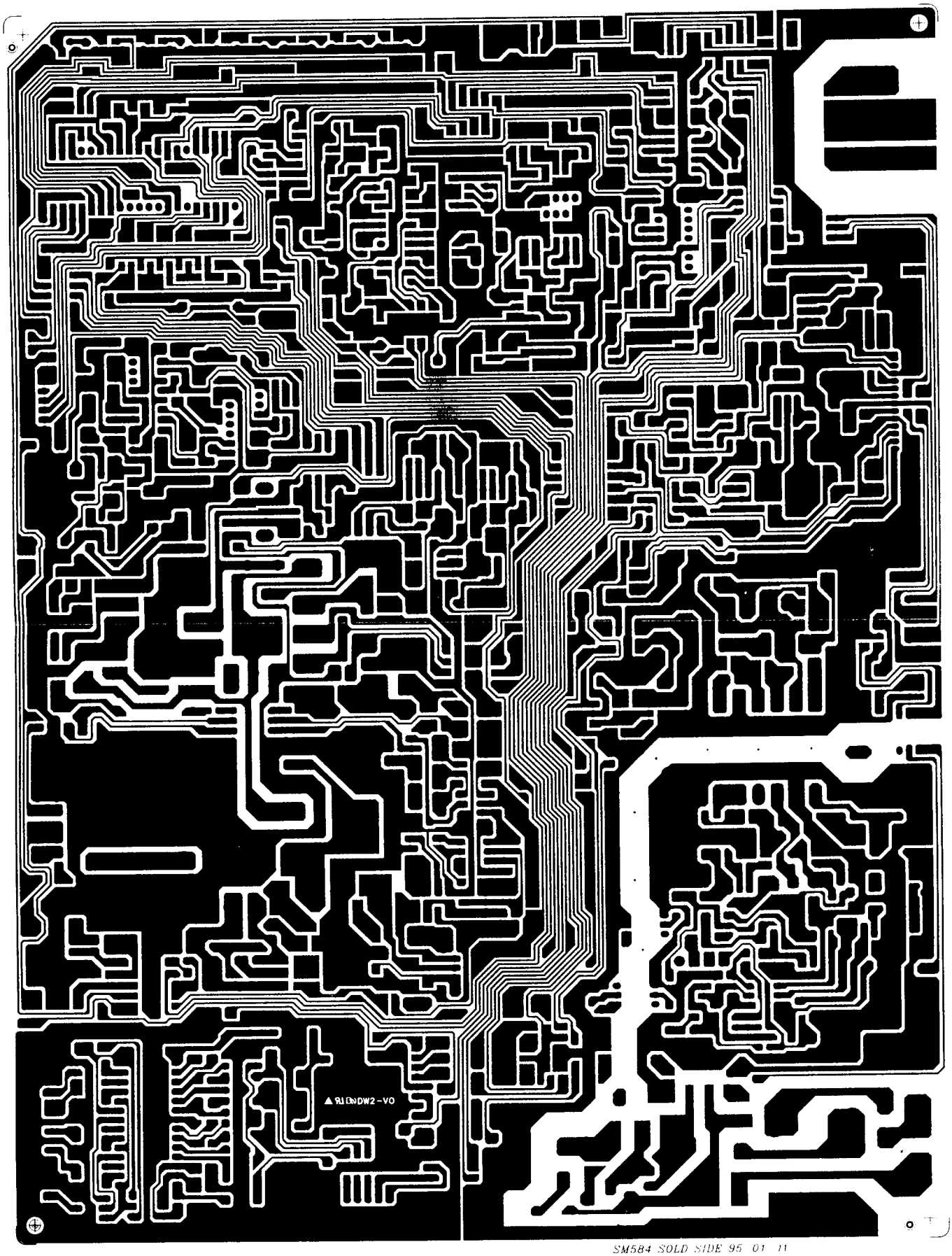

SM584 SOLD SIDE 95 01 11

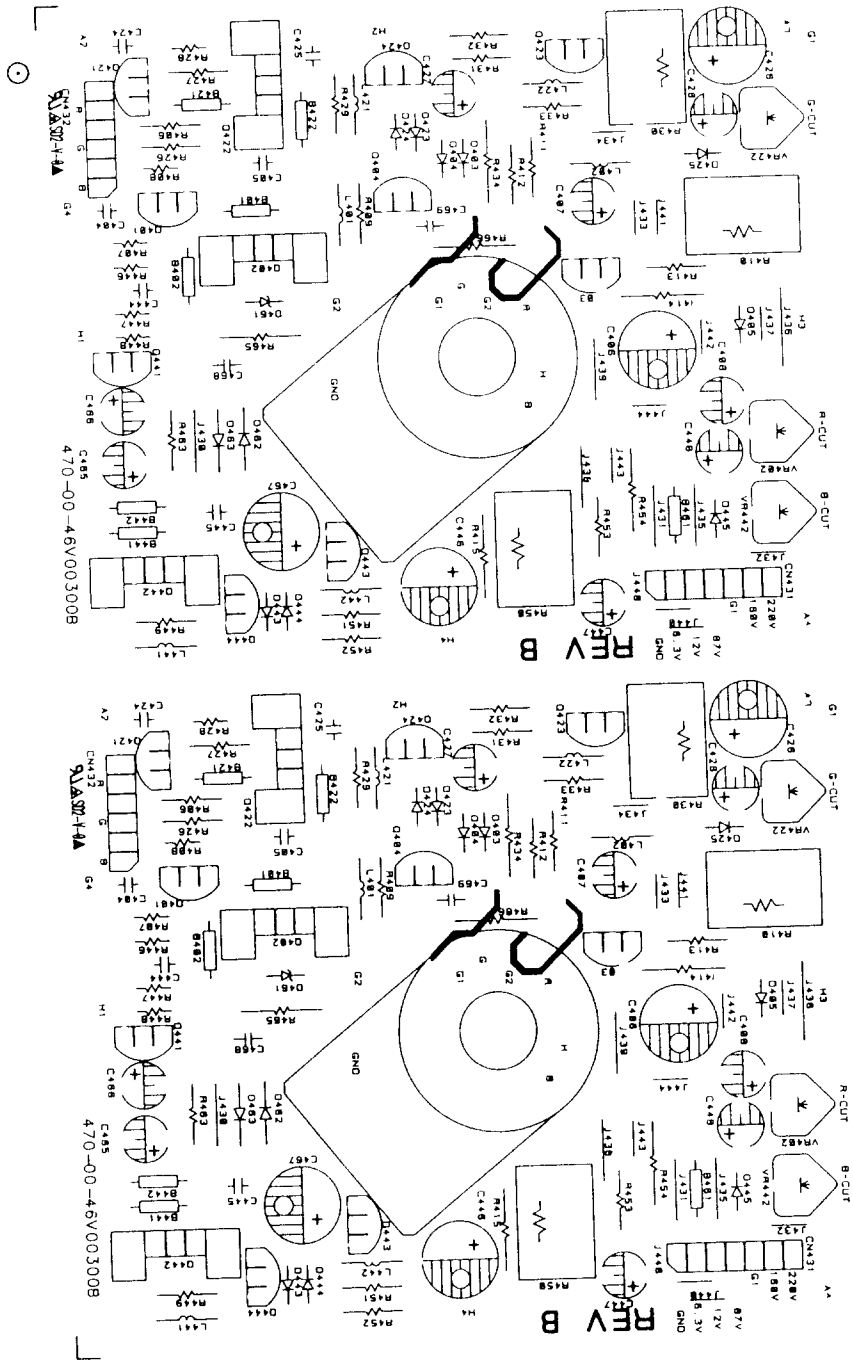

SHINHO VIDEO-NEW 95/04/11 NEP

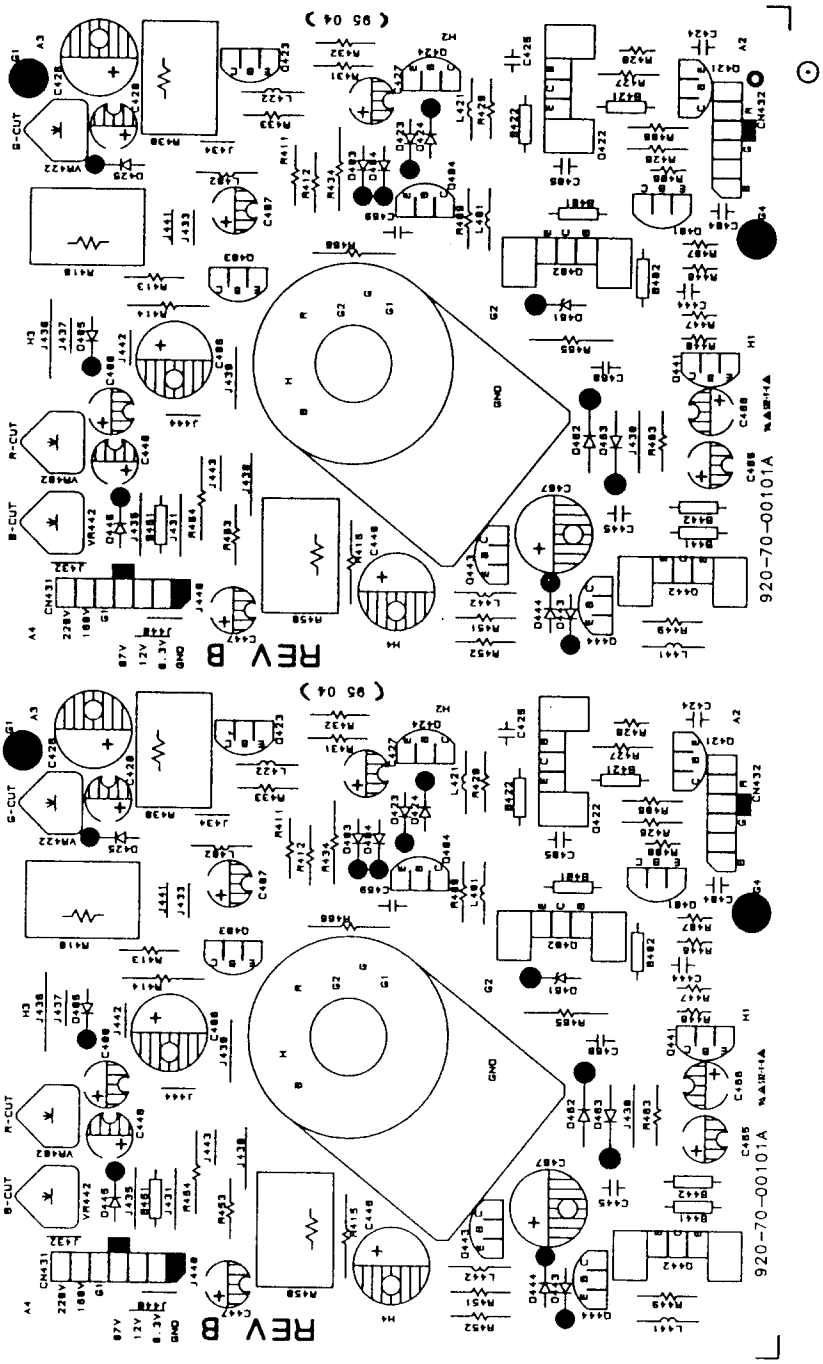

For Service Manuals
MAURITRON SERVICES
8 Cherry Tree Road, Chinnor
Oxfordshire, OX9 4QY.
Tel (01844) 351694
Fax (01844) 352554
email:- mauritron@dial.pipex.com

SHINHO VIDEO-NEW 95/04/11 NEP

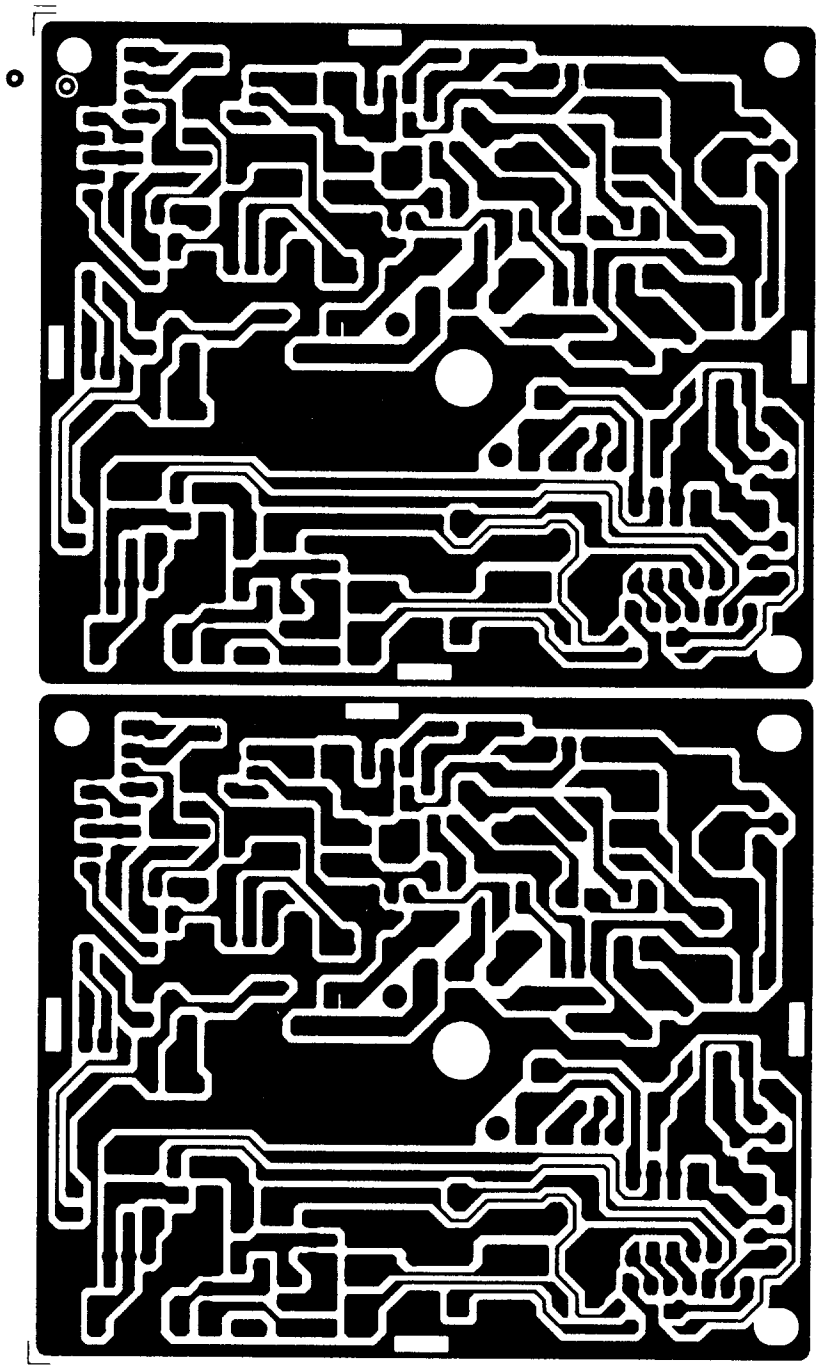

ELECTRICAL PARTS LIST

IMPORTANT SAFETY NOTICE

Components identified by the ⚠ symbol special characteristics important for safety. When replacing any of these components, use only manufacturer's specified parts.

NOTE : Tolerance F: ± 1% , G ± 2%, J: ± 5%, K: ± 10% M: ± 20%,
P: +100% - 0% Z: +80% - 20%

LOC. NO.	DESCRIPTION	REMARK
	RESISTORS	
R 249	R-CARBON : 1/2W 0.56J	
R 250	R-CARBON : 1/2W 1.2J	
R 152	R-CARBON : 1/2W 1.2KJ	
R 166	R-CARBON : 1/2W 100J	
R 414	R-CARBON : 1/2W 100J	
R 434	R-CARBON : 1/2W 100J	
R 454	R-CARBON : 1/2W 100J	
R 465	R-CARBON : 1/2W 100J	
R 466	R-CARBON : 1/2W 100J	
R 122	R-CARBON : 1/2W 150J	
R 615	R-CARBON : 1/2W 100KJ	
R 155	R-CARBON : 1/2W 120KJ	
R 164	R-CARBON : 1/2W 120KJ	
R 616	R-CARBON : 1/2W 120KJ	
R 101	R-CARBON : 1/2W 1MJ	⚠
R 614	R-CARBON : 1/2W 22J	
R 331	R-CARBON : 1/2W 270J	
R 219	R-CARBON : 1/2W 330J	
R 165	R-CARBON : 1/2W 33KJ	
R 162	R-CARBON : 1/4W 1.8KJ	
R 115	R-CARBON : 1/4W 100KJ	
R 269	R-CARBON : 1/4W 100KJ	SM583 MODEL - DELETED
R 271	R-CARBON : 1/4W 100KJ	SM583 MODEL - DELETED
R 273	R-CARBON : 1/4W 100KJ	
R 275	R-CARBON : 1/4W 100KJ	
R 277	R-CARBON : 1/4W 100KJ	
R 279	R-CARBON : 1/4W 100KJ	
R 118	R-CARBON : 1/4W 10KJ	
R 259	R-CARBON : 1/4W 10KJ	
R 463	R-CARBON : 1/4W 150J	
R 407	R-CARBON : 1/4W 180J	
R 427	R-CARBON : 1/4W 180J	
R 447	R-CARBON : 1/4W 180J	
R 409	R-CARBON : 1/4W 1KJ	
R 429	R-CARBON : 1/4W 1KJ	
R 449	R-CARBON : 1/4W 1KJ	

LOC. NO.	DESCRIPTION	REMARK
	RESISTORS	
R 261	R-CARBON : 1/4W 2.2MJ	
R 161	R-CARBON : 1/4W 2.7KJ	
R 415	R-CARBON : 1/4W 2.7KJ	
R 334	R-CARBON : 1/4W 22J	
R 288	R-CARBON : 1/4W 22KJ	SM583 MODEL - DELETED
R 337	R-CARBON : 1/4W 22KJ	
R 411	R-CARBON : 1/4W 33J	
R 412	R-CARBON : 1/4W 33J	
R 431	R-CARBON : 1/4W 33J	
R 432	R-CARBON : 1/4W 33J	
R 451	R-CARBON : 1/4W 33J	
R 452	R-CARBON : 1/4W 33J	
R 154	R-CARBON : 1/4W 33KJ	
R 289	R-CARBON : 1/4W 33KJ	SM583 MODEL - DELETED
R 119	R-CARBON : 1/4W 470J	
R 295	R-CARBON : 1/4W 470J	
R 413	R-CARBON : 1/4W 470KJ	
R 433	R-CARBON : 1/4W 470KJ	
R 453	R-CARBON : 1/4W 470KJ	
R 406	R-CARBON : 1/4W 47J	
R 426	R-CARBON : 1/4W 47J	
R 446	R-CARBON : 1/4W 47J	
R 114	R-CARBON : 1/4W 47J	
R 270	R-CARBON : 1/4W 47KJ	SM583 MODEL - DELETED
R 274	R-CARBON : 1/4W 47KJ	
R 278	R-CARBON : 1/4W 47KJ	
R 290	R-CARBON : 1/4W 47KJ	SM583 MODEL - DELETED
R 231	R-CARBON : 1/4W 8.2KJ	
R 248	R-CARBON : 1/4W 8.2KF	
R 210	R-CARBON : 1/6W 1.2KJ	
R 217	R-CARBON : 1/6W 1.2KJ	
R 201	R-CARBON : 1/6W 1.5KJ	
R 257	R-CARBON : 1/6W 1.5KJ	
R 301	R-CARBON : 1/6W 1.5KJ	
R 462	R-CARBON : 1/6W 1.8KJ	
R 424	R-CARBON : 1/6W 100J	
R 604	R-CARBON : 1/6W 100J	
R 108	R-CARBON : 1/6W 100KJ	
R 109	R-CARBON : 1/6W 100KJ	
R 313	R-CARBON : 1/6W 100KJ	
R 606	R-CARBON : 1/6W 100KJ	
R 247	R-CARBON : 1/6W 10KF	
R 208	R-CARBON : 1/6W 10KJ	
R 213	R-CARBON : 1/6W 10KJ	
R 223	R-CARBON : 1/6W 10KJ	
R 225	R-CARBON : 1/6W 10KJ	
R 229	R-CARBON : 1/6W 10KJ	
R 308	R-CARBON : 1/6W 10KJ	

LOC. NO.	DESCRIPTION	REMARK
	RESISTORS	
R 317	R-CARBON : 1/6W 10KJ	
R 318	R-CARBON : 1/6W 10KJ	
R 319	R-CARBON : 1/6W 10KJ	
R 320	R-CARBON : 1/6W 10KJ	
R 339	R-CARBON : 1/6W 10KJ	
R 402	R-CARBON : 1/6W 10KJ	
R 422	R-CARBON : 1/6W 10KJ	
R 442	R-CARBON : 1/6W 10KJ	
R 508	R-CARBON : 1/6W 10KJ	
R 510	R-CARBON : 1/6W 10KJ	
R 512	R-CARBON : 1/6W 10KJ	
R 514	R-CARBON : 1/6W 10KJ	
R 516	R-CARBON : 1/6W 10KJ	
R 528	R-CARBON : 1/6W 10KJ	
R 321	R-CARBON : 1/6W 120J	
R 228	R-CARBON : 1/6W 12KF	
R 240	R-CARBON : 1/6W 12KF	
R 241	R-CARBON : 1/6W 12KF	
R 107	R-CARBON : 1/6W 12KJ	
R 215	R-CARBON : 1/6W 12KJ	
R 333	R-CARBON : 1/6W 12KJ	
R 461	R-CARBON : 1/6W 12KJ	
R 607	R-CARBON : 1/6W 12KJ	
R 611	R-CARBON : 1/6W 12KJ	
R 304	R-CARBON : 1/6W 150KJ	
R 286	R-CARBON : 1/6W 15KJ	SM583 MODEL - DELETED
R 287	R-CARBON : 1/6W 15KJ	SM583 MODEL - DELETED
R 328	R-CARBON : 1/6W 15KJ	
R 525	R-CARBON : 1/6W 15KJ	
R 602	R-CARBON : 1/6W 15KJ	
R 224	R-CARBON : 1/6W 180J	
R 212	R-CARBON : 1/6W 180KJ	
R 309	R-CARBON : 1/6W 180KJ	
R 112	R-CARBON : 1/6W 1KJ	
R 206	R-CARBON : 1/6W 1KJ	
R 221	R-CARBON : 1/6W 1KJ	
R 222	R-CARBON : 1/6W 1KJ	
R 236	R-CARBON : 1/6W 1KJ	
R 254	R-CARBON : 1/6W 1KJ	
R 258	R-CARBON : 1/6W 1KJ	
R 260	R-CARBON : 1/6W 1KJ	
R 293	R-CARBON : 1/6W 1KJ	
R 310	R-CARBON : 1/6W 1KJ	
R 341	R-CARBON : 1/6W 1KJ	
R 342	R-CARBON : 1/6W 1KJ	
R 527	R-CARBON : 1/6W 1KJ	
R 601	R-CARBON : 1/6W 1KJ	
R 609	R-CARBON : 1/6W 1KJ	

LOC. NO.	DESCRIPTION	REMARK
	RESISTORS	
R 207	R-CARBON : 1/6W 2KJ	
R 106	R-CARBON : 1/6W 2.2KJ	
R 110	R-CARBON : 1/6W 2.2KJ	
R 233	R-CARBON : 1/6W 2.2KJ	
R 265	R-CARBON : 1/6W 2.2KJ	
R 610	R-CARBON : 1/6W 2.5KJ	
R 105	R-CARBON : 1/6W 2.7KJ	
R 204	R-CARBON : 1/6W 2.7KJ	
R 403	R-CARBON : 1/6W 220J	
R 423	R-CARBON : 1/6W 220J	
R 443	R-CARBON : 1/6W 220J	
R 212	R-CARBON : 1/6W 220KJ	
R 209	R-CARBON : 1/6W 22KJ	
R 230	R-CARBON : 1/6W 22KJ	
R 238	R-CARBON : 1/6W 22KJ	
R 305	R-CARBON : 1/6W 22KJ	
R 322	R-CARBON : 1/6W 22KJ	
R 104	R-CARBON : 1/6W 27KJ	
R 245	R-CARBON : 1/6W 27KJ	
R 326	R-CARBON : 1/6W 27KJ	
R 103	R-CARBON : 1/6W 270KJ	
R 246	R-CARBON : 1/6W 3.3KJ	
R 264	R-CARBON : 1/6W 3.3KJ	
R 316	R-CARBON : 1/6W 3.3KJ	
R 338	R-CARBON : 1/6W 3.3KJ	
R 603	R-CARBON : 1/6W 3.3KJ	
R 608	R-CARBON : 1/6W 3.3KJ	
R 613	R-CARBON : 1/6W 3.3KJ	
R 220	R-CARBON : 1/6W 3.9KJ	
R 314	R-CARBON : 1/6W 3.9KJ	
R 151	R-CARBON : 1/6W 330J	
R 203	R-CARBON : 1/6W 330J	
R 218	R-CARBON : 1/6W 330J	
R 303	R-CARBON : 1/6W 330J	
R 237	R-CARBON : 1/6W 330KF	
R 234	R-CARBON : 1/6W 33KJ	
R 266	R-CARBON : 1/6W 33KJ	
R 340	R-CARBON : 1/6W 33KJ	
R 605	R-CARBON : 1/6W 33KJ	
R 405	R-CARBON : 1/6W 390J	
R 425	R-CARBON : 1/6W 390J	
R 445	R-CARBON : 1/6W 390J	
R 214	R-CARBON : 1/6W 39KJ	
R 253	R-CARBON : 1/6W 39KJ	
R 280	R-CARBON : 1/6W 4.7KJ	SM583 MODEL - DELETED
R 281	R-CARBON : 1/6W 4.7KJ	
R 282	R-CARBON : 1/6W 4.7KJ	
R 283	R-CARBON : 1/6W 4.7KJ	SM583 MODEL - DELETED

LOC. NO.	DESCRIPTION	REMARK
	RESISTORS	
R 294	R-CARBON : 1/6W 4.7KJ	
R 507	R-CARBON : 1/6W 4.7KJ	
R 509	R-CARBON : 1/6W 4.7KJ	
R 511	R-CARBON : 1/6W 4.7KJ	
R 513	R-CARBON : 1/6W 4.7KJ	
R 515	R-CARBON : 1/6W 4.7KJ	
R 522	R-CARBON : 1/6W 4.7KJ	
R 523	R-CARBON : 1/6W 4.7KJ	
R 524	R-CARBON : 1/6W 4.7KJ	
R 526	R-CARBON : 1/6W 4.7KJ	
R 243	R-CARBON : 1/6W 470J	
R 291	R-CARBON : 1/6W 470J	
R 520	R-CARBON : 1/6W 470J	
R 521	R-CARBON : 1/6W 470J	
R 306	R-CARBON : 1/6W 470KJ	
R 323	R-CARBON : 1/6W 470KJ	
R 400	R-CARBON : 1/6W 47J	
R 404	R-CARBON : 1/6W 47J	
R 408	R-CARBON : 1/6W 47J	
R 420	R-CARBON : 1/6W 47J	
R 428	R-CARBON : 1/6W 47J	
R 440	R-CARBON : 1/6W 47J	
R 444	R-CARBON : 1/6W 47J	
R 448	R-CARBON : 1/6W 47J	
R 268	R-CARBON : 1/6W 47KJ	SM583 MODEL - DELETED
R 272	R-CARBON : 1/6W 47KJ	
R 276	R-CARBON : 1/6W 47KJ	
R 227	R-CARBON : 1/6W 5.1KF	
R 202	R-CARBON : 1/6W 5.6KJ	
R 256	R-CARBON : 1/6W 5.6KJ	
R 307	R-CARBON : 1/6W 5.6KJ	
R 216	R-CARBON : 1/6W 56KJ	
R 239	R-CARBON : 1/6W 56KJ	
R 262	R-CARBON : 1/6W 6.8KJ	
R 329	R-CARBON : 1/6W 6.8KJ	
R 612	R-CARBON : 1/6W 6.8KJ	
R 111	R-CARBON : 1/6W 62KJ	
R 211	R-CARBON : 1/6W 680J	
R 335	R-CARBON : 1/6W 680KJ	
R 327	R-CARBON : 1/6W 68J	
R 315	R-CARBON : 1/6W 7.5KJ	
R 401	R-CARBON : 1/6W 75J	
R 421	R-CARBON : 1/6W 75J	
R 441	R-CARBON : 1/6W 75J	
R 232	R-CARBON : 1/6W 8.2KJ	
R 312	R-CARBON : 1/6W 8.2KJ	
R 336	R-CARBON : 1/6W 8.2KJ	
R 235	R-CARBON : 1/6W 820J	

LOC. NO.	DESCRIPTION	REMARK
	RESISTORS	
R 205	R-CARBON : 1/6W 82KJ	
R 324	R-CARBON : 1/6W 82KJ	
R 226	R-CARBON : 1/6W 9.27KF	
R 410	R-CEMENT : 5W 2.2KJ	
R 430	R-CEMENT : 5W 2.2KJ	
R 450	R-CEMENT : 5W 2.2KJ	
R 163	R-METAL OXIDE : 1W 1.5J	
R 330	R-METAL OXIDE : 1W 1.5J	
R 158	R-METAL OXIDE : 1W 100J	
R 325	R-METAL OXIDE : 1W 3.3J	
R 168	R-METAL OXIDE : 1W 330J	
R 160	R-METAL OXIDE : 2W 22J	
R 252	R-METAL OXIDE : 2W 22J	
R 292	R-METAL OXIDE : 2W 56KJ	
R 113	R-METAL OXIDE : 3W 100KJ	
R 285	R-METAL OXIDE : 3W 1.2J	
R 244	R-METAL OXIDE : 3W 10KJ	
R 332	R-METAL OXIDE : 3W 68J	
R 251	R-METAL OXIDE : 3W 180J	
R 242	R-METAL OXIDE : 3W 270J	
R 284	R-METAL OXIDE : 3W 270J	
R 102	R-METAL OXIDE : 3W 68KJ	
R 117	R-METAL OXIDE : 3W 68KJ	
R 120	R-METAL OXIDE : 3W 8.2KJ	
R 121	R-METAL OXIDE : 3W 8.2KJ	
R 116	R-WIRE : 2W 0.22J	
	DIODE	
D 101	DIODE-BRIDGE : D2SB60	
D 462	DIODE-REC : 1000V 1N4007 1A	
D 463	DIODE-REC : 1000V 1N4007 1A	
D 105	DIODE-REC : 1200V RGP02-12E	
D 106	DIODE-REC : 1200V RGP02-12E	
D 107	DIODE-REC : 1200V RGP02-12E	
D 108	DIODE-REC : 1200V RGP02-12E	
D 232	DIODE-REC : 3TH41	
D 207	DIODE-REC : 400V RGP10G	
D 208	DIODE-REC : 400V RGP10G	
D 209	DIODE-REC : 400V RGP10G	
D 210	DIODE-REC : 400V RGP10G	
D 223	DIODE-REC : 400V RGP10G	
D 229	DIODE-REC : 400V RGP10G	SM583 MODEL - DELETED
D 303	DIODE-REC : 400V RGP10G	
D 212	DIODE-REC : 5TH-52	
D 151	DIODE-REC : RG2	
D 153	DIODE-REC : RG2	
D 606	DIODE-REC : RG2	
D 152	DIODE-REC : RG2A	
D 154	DIODE-REC : RG2Y	

LOC. NO.	DESCRIPTION	REMARK
	DIODE	
D 211	DIODE-REC : RG4	
D 224	DIODE-REC : 1N4002	
D 225	DIODE-REC : 1N4002	
D 226	DIODE-REC : 600V 1N4937 1A	
D 103	DIODE-SWG : 75V 1N4148 150MA	
D 202	DIODE-SWG : 75V 1N4148 150MA	
D 204	DIODE-SWG : 75V 1N4148 150MA	
D 205	DIODE-SWG : 75V 1N4148 150MA	
D 214	DIODE-SWG : 75V 1N4148 150MA	
D 215	DIODE-SWG : 75V 1N4148 150MA	
D 216	DIODE-SWG : 75V 1N4148 150MA	
D 217	DIODE-SWG : 75V 1N4148 150MA	SM583 MODEL - DELETED
D 219	DIODE-SWG : 75V 1N4148 150MA	
D 221	DIODE-SWG : 75V 1N4148 150MA	
D 231	DIODE-SWG : 75V 1N4148 150MA	SM583 MODEL - DELETED
D 302	DIODE-SWG : 75V 1N4148 150MA	
D 304	DIODE-SWG : 75V 1N4148 150MA	
D 305	DIODE-SWG : 75V 1N4148 150MA	
D 306	DIODE-SWG : 75V 1N4148 150MA	
D 307	DIODE-SWG : 75V 1N4148 150MA	
D 401	DIODE-SWG : 75V 1N4148 150MA	
D 402	DIODE-SWG : 75V 1N4148 150MA	
D 421	DIODE-SWG : 75V 1N4148 150MA	
D 422	DIODE-SWG : 75V 1N4148 150MA	
D 441	DIODE-SWG : 75V 1N4148 150MA	
D 442	DIODE-SWG : 75V 1N4148 150MA	
D 601	DIODE-SWG : 75V 1N4148 150MA	
D 602	DIODE-SWG : 75V 1N4148 150MA	
D 603	DIODE-SWG : 75V 1N4148 150MA	
D 604	DIODE-SWG : 75V 1N4148 150MA	
D 403	DIODE-SWG : 75V 1N4148 150MA	
D 404	DIODE-SWG : 75V 1N4148 150MA	
D 405	DIODE-SWG : 75V 1N4148 150MA	
D 423	DIODE-SWG : 75V 1N4148 150MA	
D 424	DIODE-SWG : 75V 1N4148 150MA	
D 425	DIODE-SWG : 75V 1N4148 150MA	
D 443	DIODE-SWG : 75V 1N4148 150MA	
D 444	DIODE-SWG : 75V 1N4148 150MA	
D 445	DIODE-SWG : 75V 1N4148 150MA	
D 104	DIODE-ZENER : 15V 0.5W	
D 218	DIODE-ZENER : 15V 0.5W	SM583 MODEL - DELETED
D 220	DIODE-ZENER : 15V 0.5W	
D 222	DIODE-ZENER : 15V 0.5W	
D 109	DIODE-ZENER : 16V 0.5W	
D 308	DIODE-ZENER : 5.6V	
D 203	DIODE-ZENER : UZ 8.2BM 0.5W	
D 206	DIODE-ZENER : UZ 8.2BM 0.5W	
D 213	DIODE-ZENER : UZ 8.2BM 0.5W	

LOC. NO.	DESCRIPTION	REMARK
	DIODE	
D 461	DIODE-ZENER : UZ 8.2BM 0.5W	
D 605	DIODE-ZENER : UZ 9.1BM	
D 102	DIODE-ZENER : UZP-5.1B 1W	
D 201	DIODE-ZENER : UZP-5.1B 1W	
	CAPACITORS	
C 155	C-CERAMIC : 1KV 101K	
C 110	C-CERAMIC : 1KV 103K	
C 468	C-CERAMIC : 1KV 103K	
C 469	C-CERAMIC : 1KV 103K	
C 111	C-CERAMIC : 1KV 471K	
C 119	C-CERAMIC : 250V 222M	
C 120	C-CERAMIC : 250V 222M	
C 117	C-CERAMIC : 250V 472M	
C 118	C-CERAMIC : 250V 472M	
C 152	C-CERAMIC : 250V 472M	
C 153	C-CERAMIC : 250V 472M	
C 158	C-CERAMIC : 500V 331K	
C 226	C-CERAMIC : 500V 102K	
C 234	C-CERAMIC : 500V 102K	
C 608	C-CERAMIC : 500V 102K	
C 156	C-CERAMIC : 500V 103K	
C 204	C-CERAMIC : 50V 101K	
C 207	C-CERAMIC : 50V 101K	
C 213	C-CERAMIC : 50V 101K	
C 424	C-CERAMIC : 50V 101K	
C 310	C-CERAMIC : 50V 102K	
C 323	C-CERAMIC : 50V 102K	
C 324	C-CERAMIC : 50V 102K	
C 203	C-CERAMIC : 50V 103K	
C 302	C-CERAMIC : 50V 103K	
C 303	C-CERAMIC : 50V 103K	
C 114	C-CERAMIC : 50V 104Z	
C 159	C-CERAMIC : 50V 104Z	
C 162	C-CERAMIC : 50V 104Z	
C 202	C-CERAMIC : 50V 104Z	
C 209	C-CERAMIC : 50V 104Z	
C 235	C-CERAMIC : 50V 104Z	
C 239	C-CERAMIC : 50V 104Z	
C 240	C-CERAMIC : 50V 104Z	SM583 MODEL - DELETED
C 243	C-CERAMIC : 50V 104Z	
C 246	C-CERAMIC : 50V 104Z	
C 256	C-CERAMIC : 50V 104Z	
C 258	C-CERAMIC : 50V 104Z	
C 259	C-CERAMIC : 50V 104Z	
C 260	C-CERAMIC : 50V 104Z	SM583 MODEL - DELETED
C 312	C-CERAMIC : 50V 104Z	
C 402	C-CERAMIC : 50V 104Z	
C 405	C-CERAMIC : 50V 104Z	

LOC. NO.	DESCRIPTION	REMARK
	CAPACITORS	
C 422	C-CERAMIC : 50V 104Z	
C 425	C-CERAMIC : 50V 104Z	
C 442	C-CERAMIC : 50V 104Z	
C 445	C-CERAMIC : 50V 104Z	
C 451	C-CERAMIC : 50V 104Z	
C 453	C-CERAMIC : 50V 104Z	
C 461	C-CERAMIC : 50V 104Z	
C 462	C-CERAMIC : 50V 104Z	
C 404	C-CERAMIC : 50V 121K	
C 444	C-CERAMIC : 50V 121K	
C 506	C-CERAMIC : 50V 220K	
C 507	C-CERAMIC : 50V 220K	
C 322	C-CERAMIC : 50V 221K	
C 215	C-CERAMIC : 50V 271K	
C 212	C-CERAMIC : 50V 330K	
C 403	C-CERAMIC : 50V 330K	
C 413	C-CERAMIC : 50V 330K	
C 423	C-CERAMIC : 50V 330K	
C 109	C-CERAMIC : 50V 470K	
C 112	C-CERAMIC : 50V 471K	
C 230	C-ELECTROLYTIC : 100V 100UF	
C 225	C-ELECTROLYTIC : 100V 10UF	
C 154	C-ELECTROLYTIC : 100V 220UF	
C 157	C-ELECTROLYTIC : 100V 220UF	
C 609	C-ELECTROLYTIC : 160V 100UF 105'	
C 406	C-ELECTROLYTIC : 160V 10UF	
C 426	C-ELECTROLYTIC : 160V 10UF	
C 446	C-ELECTROLYTIC : 160V 10UF	
C 210	C-ELECTROLYTIC : 160V 1UF	
C 407	C-ELECTROLYTIC : 160V 1UF	
C 427	C-ELECTROLYTIC : 160V 1UF	
C 447	C-ELECTROLYTIC : 160V 1UF	
C 164	C-ELECTROLYTIC : 16V 1000UF	
C 257	C-ELECTROLYTIC : 16V 100UF	
C 465	C-ELECTROLYTIC : 16V 100UF	
C 255	C-ELECTROLYTIC : 16V 10UF	
C 304	C-ELECTROLYTIC : 16V 10UF	
C 401	C-ELECTROLYTIC : 16V 10UF	
C 421	C-ELECTROLYTIC : 16V 10UF	
C 441	C-ELECTROLYTIC : 16V 10UF	
C 464	C-ELECTROLYTIC : 16V 10UF	
C 509	C-ELECTROLYTIC : 16V 1UF	
C 612	C-ELECTROLYTIC : 16V 1UF	
C 501	C-ELECTROLYTIC : 16V 22UF	
C 463	C-ELECTROLYTIC : 16V 470UF	
C 201	C-ELECTROLYTIC : 16V 47UF	
C 237	C-ELECTROLYTIC : 16V 47UF	
C 450	C-ELECTROLYTIC : 16V 47UF	

LOC. NO.	DESCRIPTION	REMARK
	CAPACITORS	
C 452	C-ELECTROLYTIC : 16V 47UF	
C 454	C-ELECTROLYTIC : 16V 47UF	
C 466	C-ELECTROLYTIC : 16V 47UF	
C 611	C-ELECTROLYTIC : 200V 10UF	
C 266	C-ELECTROLYTIC : 250V 1UF	
C 467	C-ELECTROLYTIC : 250V 4.7UF	
C 318	C-ELECTROLYTIC : 25V 2200UF	
C 221	C-ELECTROLYTIC : 25V 220UF	
C 321	C-ELECTROLYTIC : 25V 220UF	
C 508	C-ELECTROLYTIC : 25V 220UF	
C 161	C-ELECTROLYTIC : 25V 330UF	
C 311	C-ELECTROLYTIC : 25V 330UF	
C 228	C-ELECTROLYTIC : 25V 470UF	
C 160	C-ELECTROLYTIC : 35V 1000UF	
C 317	C-ELECTROLYTIC : 35V 1000UF	
C 320	C-ELECTROLYTIC : 35V 100UF	
C 116	C-ELECTROLYTIC : 35V 100UF	
C 105	C-ELECTROLYTIC : 400V 220UF	
C 229	C-ELECTROLYTIC : 50V 100UF	
C 106	C-ELECTROLYTIC : 50V 10UF	
C 227	C-ELECTROLYTIC : 50V 10UF	
C 309	C-ELECTROLYTIC : 50V 10UF	
C 603	C-ELECTROLYTIC : 50V 10UF	
C 610	C-ELECTROLYTIC : 50V 10UF	
C 217	C-ELECTROLYTIC : 50V 1UF	
C 219	C-ELECTROLYTIC : 50V 1UF	
C 236	C-ELECTROLYTIC : 50V 1UF	
C 241	C-ELECTROLYTIC : 50V 1UF	SM583 MODEL - DELETED
C 244	C-ELECTROLYTIC : 50V 1UF	
C 247	C-ELECTROLYTIC : 50V 1UF	
C 251	C-ELECTROLYTIC : 50V 1UF	SM583 MODEL - DELETED
C 314	C-ELECTROLYTIC : 50V 1UF	
C 408	C-ELECTROLYTIC : 50V 1UF	
C 428	C-ELECTROLYTIC : 50V 1UF	
C 448	C-ELECTROLYTIC : 50V 1UF	
C 208	C-ELECTROLYTIC : 50V 330UF	
C 238	C-ELECTROLYTIC : 50V 33UF	
C 124	C-ELECTROLYTIC : 50V 4.7UF	
C 206	C-ELECTROLYTIC : 50V 4.7UF	
C 301	C-ELECTROLYTIC : 50V 4.7UF	
C 319	C-ELECTROLYTIC : 50V 4.7UF	
C 502	C-ELECTROLYTIC : 50V 4.7UF	
C 503	C-ELECTROLYTIC : 50V 4.7UF	
C 504	C-ELECTROLYTIC : 50V 4.7UF	
C 505	C-ELECTROLYTIC : 50V 4.7UF	
C 305	C-ELECTROLYTIC : 50V(NP) 3.3UF	
C 306	C-ELECTROLYTIC : 50V(NP) 10UF	
C 605	C-M.POLYETER : 250V 104K	

LOC. NO.	DESCRIPTION	REMARK
	CAPACITORS	
C 606	C-M,POLYETER : 250V 104K	
C 121	C-M,POLYETER : 250V 105K	⚠
C 101	C-M,POLYETER : 250V 474K	⚠
C 245	C-M,POLYPROPYLENE : 250V 324J	
C 233	C-M,POLYPROPYLENE : 250V 504J	
C 248	C-M,POLYPROPYLENE : 250V 684J	
C 242	C-M,POLYPROPYLENE : 250V 104J	SM583 MODEL - DELETED
C 249	C-M,POLYPROPYLENE : 250V 104J	
C 151	C-POLYETER : 100V 102J	
C 601	C-POLYETER : 100V 102J	
C 218	C-POLYETER : 100V 103J	
C 313	C-POLYETER : 100V 103J	
C 602	C-POLYETER : 100V 103J	
C 107	C-POLYETER : 100V 104J	
C 211	C-POLYETER : 100V 104J	
C 223	C-POLYETER : 100V 104J	
C 222	C-POLYETER : 100V 122J	
C 224	C-POLYETER : 100V 153K	
C 250	C-POLYETER : 100V 223K	
C 307	C-POLYETER : 100V 224K	
C 216	C-POLYETER : 100V 332J	
C 108	C-POLYETER : 100V 472J	
C 604	C-POLYETER : 100V 472J	
C 308	C-POLYETER : 100V 473K	
C 232	C-POLYPROPYLENE : 1.6KV 302J	
C 253	C-POLYPROPYLENE : 1.6KV 472J	SM583 MODEL - DELETED
C 113	C-POLYPROPYLENE : 100V 102J	
C 205	C-POLYPROPYLENE : 100V 102J	
C 220	C-POLYPROPYLENE : 100V 102G	
C 214	C-POLYPROPYLENE : 100V 182J	
C 252	C-POLYPROPYLENE : 630V 103J	SM583 MODEL - DELETED
C 231	C-POLYPROPYLENE : 630V 602J	
C 316	C-TANTAL : 25V 10UF	
C 315	C-TANTAL : 35V 0.68UF	
	INTEGRATED CIRCUITS	
IC 502	IC : KS7745CZ	
IC 501	IC : ST6399	
IC 301	IC-LINEAR : 4066	
IC 202	IC-LINEAR : CD4538 BCN,MC14538BCP	
IC 205	IC-LINEAR : GL1151,LA7851	
IC 101	IC-LINEAR : KA3842	
IC 152	IC-LINEAR : KA431Z,KA431AZ	
IC 151	IC-LINEAR : KA7812	
IC 206	IC-LINEAR : KA78L05	
IC 504	IC-LINEAR : KA78L05	
IC 303	IC-LINEAR : LA7838	
IC 401	IC-LINEAR : LM1203	
IC 302	IC-LINEAR : LM324,KA324	

LOC. NO.	DESCRIPTION	REMARK
	INTEGRATED CIRCUITS	
IC 203	IC-LINEAR : LM358,KA358	
IC 204	IC-LINEAR : LM358,KA358	
IC 602	IC-LINEAR : LM358,KA358	
IC 601	IC-LINEAR : LM393,KA393	
IC 201	IC-TTL : 74HC86	
IC 503	IC-TTL : 74LS74	
	TRANSISTORS	
Q 215	FET N-CHANNEL : 200V IRF640 18A	SM583 MODEL - DELETED
Q 217	FET N-CHANNEL : 200V IRF640 18A	
Q 219	FET N-CHANNEL : 200V IRF640 18A	
Q 223	FET N-CHANNEL : 400V IRF740 10A	SM583 MODEL - DELETED
Q 603	FET P-CHANNEL : 200V IRF9610 1.75A	
Q 301	TRANSISTOR-NPN : 2N3904	
Q 401	TRANSISTOR-NPN : 2N3904	
Q 421	TRANSISTOR-NPN : 2N3904	
Q 441	TRANSISTOR-NPN : 2N3904	
Q 404	TRANSISTOR-NPN : 2N5401 (E-B-C)	
Q 424	TRANSISTOR-NPN : 2N5401 (E-B-C)	
Q 444	TRANSISTOR-NPN : 2N5401 (E-B-C)	
Q 403	TRANSISTOR-NPN : 2N5551 (E-B-C)	
Q 423	TRANSISTOR-NPN : 2N5551 (E-B-C)	
Q 443	TRANSISTOR-NPN : 2N5551 (E-B-C)	
Q 101	TRANSISTOR-NPN : 60V KSC945-Y	
Q 102	TRANSISTOR-NPN : 60V KSC945-Y	
Q 153	TRANSISTOR-NPN : 60V KSC945-Y	
Q 202	TRANSISTOR-NPN : 60V KSC945-Y	
Q 205	TRANSISTOR-NPN : 60V KSC945-Y	
Q 210	TRANSISTOR-NPN : 60V KSC945-Y	
Q 211	TRANSISTOR-NPN : 60V KSC945-Y	
Q 220	TRANSISTOR-NPN : 60V KSC945-Y	
Q 221	TRANSISTOR-NPN : 60V KSC945-Y	SM583 MODEL - DELETED
Q 224	TRANSISTOR-NPN : 60V KSC945-Y	
Q 225	TRANSISTOR-NPN : 60V KSC945-Y	
Q 226	TRANSISTOR-NPN : 60V KSC945-Y	
Q 302	TRANSISTOR-NPN : 60V KSC945-Y	
Q 303	TRANSISTOR-NPN : 60V KSC945-Y	
Q 601	TRANSISTOR-NPN : 60V KSC945-Y	
Q 206	TRANSISTOR-NPN : C3503-E	
Q 402	TRANSISTOR-NPN : C3503-E	
Q 422	TRANSISTOR-NPN : C3503-E	
Q 442	TRANSISTOR-NPN : C3503-E	
Q 207	TRANSISTOR-NPN : C5129	⚠
Q 214	TRANSISTOR-NPN : KSP42 0.5A	SM583 MODEL - DELETED
Q 216	TRANSISTOR-NPN : KSP42 0.5A	
Q 218	TRANSISTOR-NPN : KSP42 0.5A	
Q 103	TRANSISTOR-NPN : 80V KSC 1008-Y	
Q 104	TRANSISTOR-NPN : 80V KSC 1008-Y	
Q 222	TRANSISTOR-NPN : 80V KSC 1008-Y	SM583MODEL - DELETED

LOC. NO.	DESCRIPTION	REMARK
	TRANSISTORS	
Q 305	TRANSISTOR-NPN : 80V KSC 1008-Y	
Q 151	TRANSISTOR-PNP : 2SA614-Y	
Q 208	TRANSISTOR-PNP : 2SA614-Y	
Q 203	TRANSISTOR-PNP : 60V KSA733-Y	
Q 204	TRANSISTOR-PNP : 60V KSA733-Y	
Q 209	TRANSISTOR-PNP : 60V KSA733-Y	
Q 212	TRANSISTOR-PNP : 60V KSA733-Y	
Q 213	TRANSISTOR-PNP : 60V KSA733-Y	
Q 304	TRANSISTOR-PNP : 60V KSA733-Y	
Q 602	TRANSISTOR-PNP : 60V KSA733-Y	
Q 306	TRANSISTOR-PNP : KSA708	
Q 105	MOS-FET : N-CHANNEL SSH6N80	
	VARIABLE RESISTORS	
VR 202	VR-ROTARY : 20F B10KJ C1 0.05W	
VR 301	VR-SEMI FIXED : 1KJ 0.2W VER.	
VR 602	VR-SEMI FIXED : 1KJ 0.2W VER.	
VR 401	VR-SEMI FIXED : 200J 0.2W VER.	
VR 441	VR-SEMI FIXED : 200J 0.2W VER.	
VR 601	VR-SEMI FIXED : 200KJ 0.1W VER.	
VR 203	VR-SEMI FIXED : 2KJ 0.2W VER.	
VR 151	VR-SEMI FIXED : 500J 0.1W VER.	
VR 402	VR-SEMI FIXED : 50KJ 0.2W VER.	
VR 422	VR-SEMI FIXED : 50KJ 0.2W VER.	
VR 442	VR-SEMI FIXED : 50KJ 0.2W VER.	
VR 201	VR-SEMI FIXED : 5KJ 0.05W	
	TRANS & COILS	
T 103	SYSC-TRANS : DH-S	
T 202	TRANS-FLYBACK : KFS-61280A	
T 201	TRANS-H, DRIVE : 52mH	
T 101	TRANS-POWER : DH15-1	
T 102	COIL LINE FILTER : 15mH DH3	
J 231	CIOL-INDUCTOR : 220UH	
L 200	CIOL-INDUCTOR : 220UH	
L 301	CIOL-INDUCTOR : 220UH	
L 602	CIOL-INDUCTOR : 220UH	
L 401	CIOL-INDUCTOR : 5.6UH	
L 402	CIOL-INDUCTOR : 5.6UH	
L 421	CIOL-INDUCTOR : 5.6UH	
L 422	CIOL-INDUCTOR : 5.6UH	
L 441	CIOL-INDUCTOR : 5.6UH	
L 442	CIOL-INDUCTOR : 5.6UH	
L 202	COIL-CHOKE : 130UH DH6	
L 601	COIL-CHOKE : 2mH DH5	
L 203	COIL-H,LINEARITY : 4.5UH	
L 201	COIL-INDUCTOR : 10mH	

LOC. NO.	DESCRIPTION	REMARK
	CRTS	
CRT	CRT,COLOR,15" :M36KUK35X25 (MPRII)	⚠
CRT	CRT,COLOR,15" :M36KUN35X25 (NORMAL)	⚠
CRT	CRT,COLOR,15" : M36EDR320X121	⚠
	OTHERS	
X 501	RESONATOR : 8MHZ	
S 101	SOCKER-CRT : DHE-A93-700M	
SW 101	SWITCH KEY : 250V 5A	⚠
SW 501	TACT SWITCH	
SW 502	TACT SWITCH	
SW 503	TACT SWITCH	
SW 504	TACT SWITCH	
SW 505	TACT SWITCH	
SW 506	TACT SWITCH	
SW 507	TACT SWITCH	
SW 508	TACT SWITCH	
SW 509	TACT SWITCH	
B 101	BEAD CORE : 6MM	
B 203	BEAD CORE : 6MM	
B 401	BEAD CORE : 6MM	
B 402	BEAD CORE : 6MM	
B 403	BEAD CORE : 6MM	
B 404	BEAD CORE : 6MM	
B 406	BEAD CORE : 6MM	
B 407	BEAD CORE : 6MM	
B 421	BEAD CORE : 6MM	
B 422	BEAD CORE : 6MM	
B 441	BEAD CORE : 6MM	
B 442	BEAD CORE : 6MM	
B 461	BEAD CORE : 6MM	
B 105	BEAD CORE : 9MM	
B 151	BEAD CORE : 9MM	
B 152	BEAD CORE : 9MM	
B 201	BEAD CORE : 9MM	
B 202	BEAD CORE : 9MM	
B 204	BEAD CORE : 9MM	
B 205	BEAD CORE : 9MM	
B 405	BEAD CORE : 9MM	
B 601	BEAD CORE : 9MM	
CN 402	CON 6P ASS'Y	
CN 102	CONN-WAFER : 3P 3901-03	
CN 402	CONN-WAFER : 5267-06A,YW-025-06 6P	
CN 401	CONN-WAFER : 5267-07A,YW-025-07 7P	
CN 202	CONN-WAFER : 5267-06A MOLEX,5045 6P	
CN 401	D-SUB CONNECTOR : DE-09SLUKL2	
SW 102	LEVER SW : JRS1301	
SW 201	LEVER SW : JRS1301	

LOC. NO.	DESCRIPTION	REMARK
	OTHERS	
CN 101	NOISE FILTER : IX-0342-P	
NTC 101	NTC THERMISTER : DSC-8D-13	
ISO 101	PHOTO COUPLER : MCT2201	
ISO 102	PHOTO COUPLER : MCT2201	
ISO 103	PHOTO COUPLER : MCT2201	
PTH 101	POSISTOR	
F 101	FUSE 250V 3A	⚠
	FUSE CLIP(X2)	
LED 151	SVM0523 SQUARE WHR(RED/GRN)	
	JET MELT	
	SILICON BOND	
	BOND ARON ALPHA	
	BOND LOCK SCREW	
	CLEANER	
	NITRON-SHEET	
	SIGNAL CABLE (15-9PIN D-DUB)	
	POWER CORD	
	SPONGE	
	BACK COVER	
	SCREW TAPPING BH M 4*16	FBT
	LABEL RATING	
	MANUAL	
	WARRANTY CARD	
	LABEL BAR CODE	
	LABEL CAUTION (HEAT SINK)	
	LABEL SERIAL NO.	
	PACKING CASE	
	MAIN PCB	
	VIDEO PCB	
	PE-BAG(0.015*850*800)	
	PE-BAG(0.0015*230*360)	
	SILICON RUBBER (TC-45A)	
	CUSHION-L	
	CUSHION-R	
	ASS'Y STAND	
	TAPE	
	COIL-DEGAUSSING (7.5MH 20%)	
	CRT GROUND	
	CABLE TIE (X3)	
	GT PIN(X11)	
IC 501	SOCKET IC(40 PIN)	
	SHIELED VIDEO	
	SHIELD CRT (SPTE T=0.3)	
	HEAT SINK FBT	
	HEAT SINK V (AL T=2.0)	
	HEAT SINK P (AL T=2.5)	
	HEAT SINK TR/A (SPC T=1.0)	
	HEAT SINK TR/B (ST 1.0)	FOR Q402.Q422.Q442

LOC. NO.	DESCRIPTION	REMARK
	OTHERS	
	HEAT SINK TR/C	
	CHASSIS MAIN (HF-0660I)	
	SCREW TAPPING BH M 3*8 (X12)	
	SPRING TR (SUS304-1-T45A)	
	KNOB VOLUME (HF-0660I)	BRIGHTNESS, CONTRAST
	SCREW TAPPING-BH M 4*16	CRT (4)
	CONN 1P ASS'Y- 170MM BLACK	
	CONN 7P ASS'Y - 240MM	
	CONN 2P ASS'Y - 320MM	AC POWER
	SCREW SAM -PHWW T1 3*10 ZPC	5EA
	SUPPORT PCB	1EA