SAMTRON

14″ SUPER VGA COLOR MONITOR

SERVICE MANUAL

SC-428TX+/L+

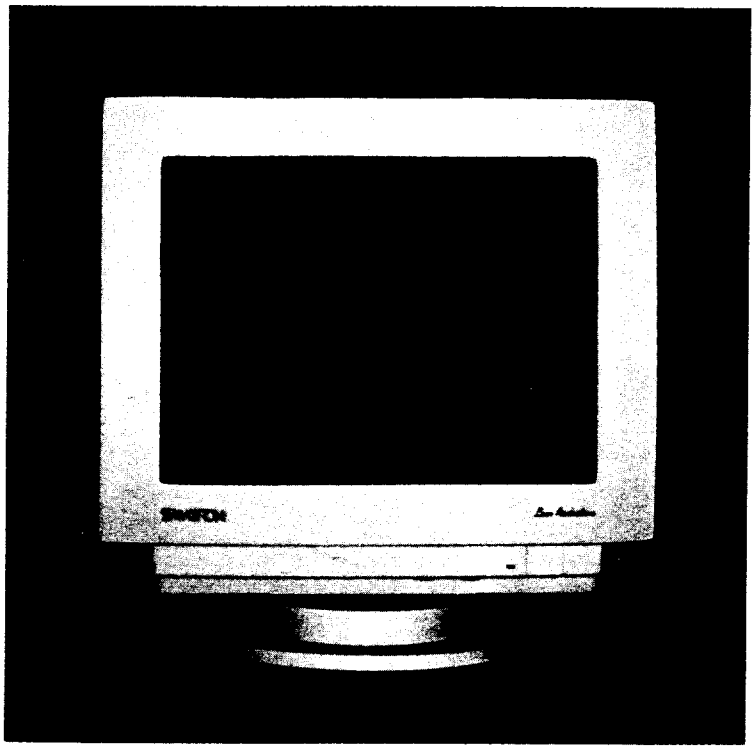

SAMTRON

14″ SUPER VGA COLOR MONITOR

SERVICE MANUAL

SC-428TX+/L+

SPECIFICATION

Picture tube	M34KUN35 × × SC-428TX+ M34KUK35 * 03(E) : SC-428TXL+ 14 Inches diagonal 90 degree deflection, 0.28mm dot pitch, black matrix
Input signal	Video : 0.7Vp-p Analog level positive Sync : TTL level
Display colors	Any Colors
Synchro-nization	Horizontal : 31.5KHz/35.2KHz/35.5KHz/37.8KHz/46.8KHz/48KHz Vertical : 56Hz/60Hz/70Hz/72Hz/75Hz/87Hz
Resolution	640 dots(H) × 350Line(V) 640 dots(H) × 400Line(V) 640 dots(H) × 480Line(V) 800 dots(H) × 600Line(V) 1024 dots(H) × 768Line(V) (N·I)
Video band width	65MHz(-3dB)
Display area	Horizontal : 245 ± 5mm Vertical : 180 ± 5mm
Ac Input voltage	AC90V ~ 264V(47Hz~63Hz)
Power consumption	80W(MAX.)
Dimension	354(W) × 387(D) × 365(H) mm (WITH STAND)
Ship Weight	13.7kg
Weight	11.5kg

TABLE OF CONTENTS

1. GENERAL INFORMATIONS
(1) SAFETY PRECAUTION 5
(2) DOCUMENT DESCRIPTION 6
(3) PRODUCT DESCRIPTION 6
(4) USER ADJUSTMENTS 7

2. CHARACTERISTICS
(1) GENERAL CHARACTERISTICS 8
(2) ELECTRICAL CHARACTERISTICS 8
(3) MECHANICAL CHARACTERISTICS 10

3. SERVICE ADJUSTMENT 11

4. TROUBLE SHOOTING 13

5. OPERATION OF CIRCUIT 17

6. CDT 19

7. FIGURES
(1) TIMING CHART 21
(2) BLOCK DIAGRAM 22
(3) POSITION OF CONTROL PART ON PCB 23

8. DRAWINGS
(1) CIRCUIT DIAGRAM 25
(2) PCB ARTWORK DRAWINGS 37

9. APPENDIX
(1) PARTS LIST 41
(2) RELIABILTIES 59
(3) SIGNAL CABLE PIN CONNECTION 60

1. GENERAL INFORMATION

(1) SAFETY PRECAUTION

WARNING : Service should not be attempted anyone unfamiliar with the necessary precautions on this unit.
The following precautions are necessary during servicing.

1. Some parts such as a picture tube in this unit have special safety-relate characteristics for X-RAY RADIATION protection.
   For continued safety, the parts replacement should be undertaken referring to item 2 below.
2. Many electrical mechanical parts in this unit have special safety-related characteristics for protection against shock hazard and others.
   These characterstics are often passed unnoticed by a visual inspection and the protection afforded by them cannot necessarily be obtained by using replacement components rated for higher voltage wattage, etc.
   Replacement parts which have these special characteristics are identified in the manual and supplements by shading on the schematic diagram and the parts list.
   Before replacing of these components read the parts list in this manual carefully
3. When replacing chassis in the cabinet, always be certain that all the protective devices are installed properly, such as insulating covers, strain relief, etc.
4. Before replacing the back cover of the set, thoroughly inspect inside the cabinet to see that no stray parts or tools have been left inside.
5. Before returning the set to the customer always perform an AC leakage current check on the exposed metallic parts of the cabinet, such as terminal, screwheads, metal overlays, control shafts, etc, To be sure the set in safe to operate without danger of electrical shock, Plug the AC line cord directly into a 115V AC outlet (do not use a line isolation transformer during this check). Use an AC voltmeter having 5000 ohms per volt or more sensitivity in the following manner.
   Connect a 1500ohm, 10watt resistor, paralleled by a 0.15mfd (μF), 250VAC capacitor, between a known good earth ground (water pipe, conduit, etc.) and the exposed metallic parts, one at a time.
   Measure the AC voltage across the combination of 1500 ohm resistor and 0.15mfd(μF) capacitor, Reverse the AC plug at the AC outlet and repeat AC voltage measurements for each exposed metallic part.
   Votage measured must not exceed 0.3V RMS. This corresponds to 0.2mA AC any value exceeding this limit constitutes a potential shock hazard and must be corrected immediately.

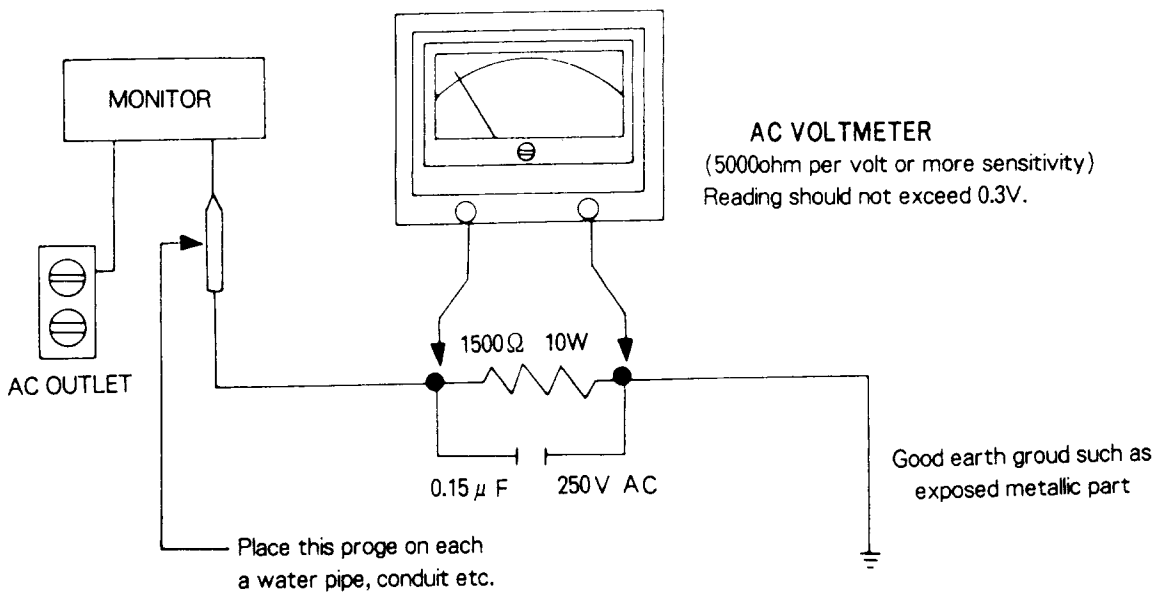

Voltmeter Hook-up for leakage Current check

[2] DOCUMENT DESCRIPTION

This is technical specification for a SC-428TX+/TXL+ Color display display monitor.
This document contains information on all technical details of the monitor.

[3] PRODUCT DESCRIPTION

This SC-428TX+/TXL+ Color display monitor to be operated in Analog Drive mode in put a highlight of these are provided below.

· Resolution	: 640 Dots × 350 Lines 640 Dots × 400 Lines 640 Dots × 480 Lines 800 Dots × 600 Lines 1024 Dots × 768 Lines (N·I)
· Display capability	: up to 2400 Characters
· Active display area	: Horizontal : 245 ± 5mm Vertical : 180 ± 5mm
· Horizontal frequency	: 31.5KHz/35.2KHz/35.5KHz/37.8KHz/46.8KHz/48KHz
Vertical frequency	: 56Hz/60Hz/70Hz/72Hz/75Hz/87Hz

USING COLOR DISPLAY MONITOR

Meting SC-428TX+/TXL+ Color display monitor.
Refor to the diagram below to be sure that your SC-428TX+/TXL+ package includes all the items in this picture.
Save the orginal box and packing materials in case you have to ship or transport.

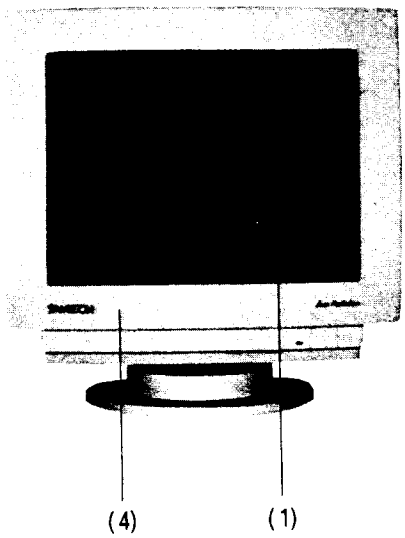

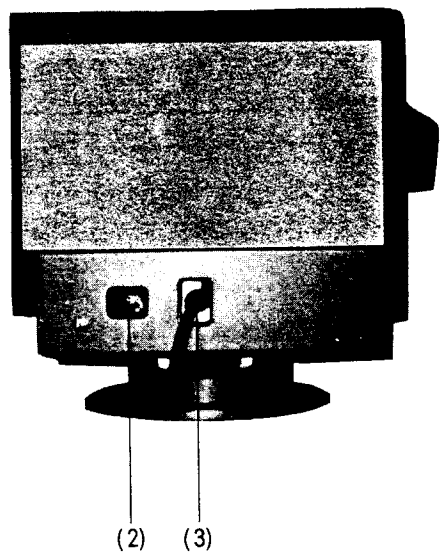

(1) Color display monitor
(2) Power Input
(3) Signal cable
(4) Swivel/Tilt stand

[4] USER ADJUSTMENTS

Apply power and analog video signal to the data display

1. ADJUSTING THE FRONT CONTROLS

FRONT VIEW

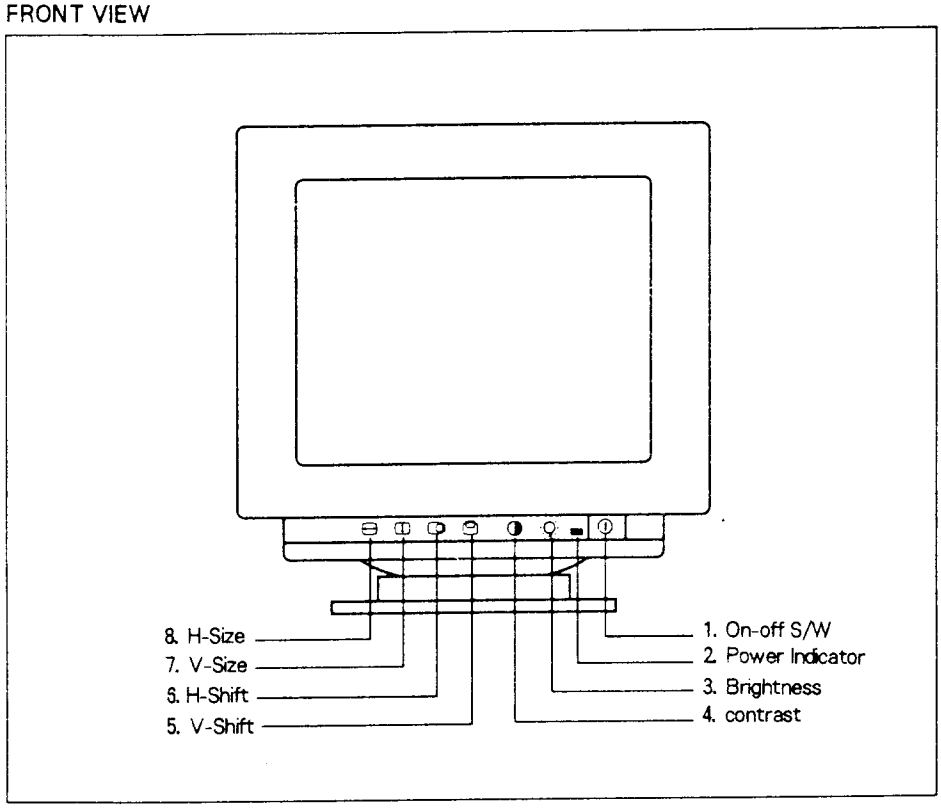

1. The On-Off Switch : The on-off switch of Monitor is in the lower right-hand corner. To turn the Monitor on, push the switch. You will see the light of the power indicator. To turn the Monitor off push the switch again. The power indicator will go out.
2. The Power Indicator : Green light.
3. Brightenss control : Intensifies screen illumination.
4. The Contrast Control : Rotationg it increases or decreases the degree of difference between the lightest and darkest sections on the screen.
5. Vertical shift : Adjustment for vertical alignment.
6. Horizontal shift : Adjustment for horizontal alignment.
7. Vertical size : Adjustment for vertical height.
8. Horizontal size : Adjustment for horizontal width.

2. CHARACTERISTICS

(1) GENERAL CHARACTERISTICS

NO	Description	Nominal	Remark
1	CDT(Color Display Tube)	M34KUN35 × × : SC-428TX+ M34KUK35 * 03(E) : SC-428TXL+	
2	CDT Phosphor	P 22 Dark Phosphor	
3	D.Y Deflection Angle	90°	
4	Resolution	640 × 350, 640 × 400, 640 × 480, 800 × 600, 1024 × 768 Lines	Graphic Mode
5	Sync. Frequency	H : 31.5KHz/35.2KHz/35.5KHz/37.8KHz/46.8K/48K V : 56Hz/60Hz/70Hz/72Hz/87Hz/75Hz	
6	Input Signal	R. G. B Anglog	
7	AC Input	AC 90~264V	Free Voltage
8	Display Color	Unlimited	
9	Display Zone	H : 245mm, V : 180mm	
10	Display Character	Up To 2400 Characters	

(2) Electrical Characteristics

2-1. Input Power

The display device shall maintain the specified performances in the range described below.

NO	Description	Nominal	Remark
1	Power Source	AC 90V~264V	Universal Power
2	Frequency	47~63Hz	
3	Power Consumption	MAX. 80W	

2-2. Input Signal

The input signals shall be applied to the display devices through a signal cable which must be intended as part of the monitor. (Ref. Fig 1 Timing chart)

Section	Description	Nominal	Remark
Video Signal Red Green Blue	Video input	0.0 to 0.7V_{P-P} Analog	
	Polarity	Positive	
	Pixel Rate	Up to 65MHz	
	Rise/Fall Time	Less than 8 nesc	
	Input impedance	75 Ohms	
Horizontal -Sync.	Sync input	2.4 ≦ Level ≦ 5V	
	Pulse Width	1.0~3.92 usec	
	Frequency	31.5KHz/35.2KHz/35.5KHz/37.8KHz/46.8K/48KHz	
	Front Porch	0.18~1.12 usec	
	Back Porch	1.25~4.07usec	
Vertical -Sync	Sync Input	2.4V ≦ Level ≦ 5V	
	Pulse Width	0.06~0.13msec	
	Frecuency	56Hz/60Hz/70Hz/72Hz/87Hz/75Hz	
	Front Porch	0.014~1.2 msec	
	Back Porch	0.563~1.88 msec	

2-3. CRT Electrode voltage

NO	Description	Nominal	Remark
1	·Heater	6.3V ±0.5V, 630mA ±30mA	
2	Cathode(R. G. B)	70V ±20V	
3	Gride #1	−10V~−90V	
4	Gride #2	500V ±50V	Screen
5	Gride #3	6.5KV ±0.5KV	Focus
6	Anode Voltage	24KV ±1KV @0UA	

2-4. Timing Characteristic

The monitor shall be capable of displaying 3 different vertical resolution within the scan frequencies range as well as the scanning mode. (REF. FIG 1 TIMING CHART)

(3) MECHANICAL CHARACTERISTICS

3-1. Weight

The total weight shall be less approximate 13.7kg.

3-2. Exter nal Dimensions (mm)

	With Stand
Width	354
Height	365
Length	387

3-3. Tilt/Swivel

The inclination of the suface of the screen shall be adjustable at least −5deg. and +11deg. With a min. 1deg. from the vertical. The swivel must be min. 180deg.

3-4. Tool Resin

Tool	Resin	Color
Front	ABS	PARCHMENT WHITE
Rear	ABS	PARCHMENT WHITE
Stand	ABS	PARCHMENT WHITE

3. ADJUSTENTS

* All kinds of internal V/R should be set at the mechanical center position.

1. B+ VOLTAGE ADJUSTMENT

* Push the override switch(SW2) in rear
* Disconnect the signal cable from signal source
* Adjust contrast and Brightness controls to maximum, and G2 control to minimum
* Make sure the AC power supply voltage is at the specified value.
* Adjust VR101(+B Line – ADJ.volume) for the voltage egual to 87.5 ± 0.5V

2. DEFLECTION CIRCUIT ADJUSTMENT

2-1. Horizontal oscillation Frequency adjustment(H-HOLD)

* Disconnect the signal cable from signal source.
* Adjust VR303(H–HOLD) for the horizontal frequency equal to 31.5±0.2KHz.
* The horizontal frequency for the other modes are automatically set by interface circuit.
* Push the override switch(SW2) in rear

2-2. Screen position adjustment.(H–SHIFT. V–SHIFT)

* Receive a cross-hatch pattern signal of 800×600(fH=37.8KHz)mode.
* Adjust VR304(H–SHIFT), VR201(V–SHIFT) for the Screen position to center.

2-3. Horizontal size adjustment(H-SIZE)

* Adjust contrast and brightness controls to maximum.
* Receive cross-hatch pattern of 800×600(fH=37.8KHz)mode.
* adjust VR801(H–SIZE) for the horizontal size eagual to 245±3mm

2-4. Vertical size adjustmen(V-SIZE)

* Receive a cross-hatch pattern signal of 800×600(fH=37.8KHz) mode.
* Make the height to 180±3mm using VR301(V-SIZE)

2-5. Vertical position adjustment(V-SHIFT)

* Receive a cross-hatch pattern signal of 800×600(fH=37.8KHz) mode.
* The picture is to be placed at the center position of the CDT screen using VR201(V-SHIFT)

2-6. SIDE-PINCUSHION ADJUSTMENT(S-PIN)

* Recive cross-hatch pattern signal of 800×600(fH=37.8KHz) mode.
* And adjust side-pincushion using VR302(S–PIN).

3. VIDEO CIRCUIT ADJUSTMENT

3-1. Controls function

* Brightness volume(VR803)
  This knob controls the black level of the image.
* Sub-Brightness Control(VR802)
  This control is used for adjusting the cut-off point of the raster after the brightness control set to maximum.
* R. G. B gain volumes(VR401, VR402, VR403)
  These volumes control the gain of RED, GREEN, BLUE video pre-amplifier.
* R. G. B. bias volume(VR501R, VR501G, VR501B)
  These volumes control the bias voltage of RED, GREEN, BLUE cathode of CDT.
* Screen volume(On the FBT)
  This volume controls the screen voltage of the CDT.
* Contrast volum(VR404)
  This knob controls the contrast of the image. It establishes the gain of the video amplifier but does not affect the raster luminance.
* Focus volume.(On the FBT)

This volume controls the focus of the picture.

4. WHITE BALANCE ADJUSTMENT.

* Adjust R. G. B. gain and bias volumes to mechanical center.
* Operate the set for 15 minutes to warm up.
* Degauss the CDT face fully with degaussing tool.
* Adjust screen volume for the luminance of the raster equal to 1~3 F/L.
* Adjust bias volume of R. G. B so that the color of the raster may become white.
* Now adjust the sub-bright volume for the luminance of the raster equal to 0.1~2.0 F/L MAX.(without video signal)
* Receive a full white pattern signal.(800×600 mode, fH=37.8KHz)
* Adjust R. G. B gain volume for the specified white color.

Use the color analyzer equipment.

※ Standard color coordinate.(@ 10F/L, 25 F/L)

X = 0.281 ± 0.02, Y = 0.311 ± 0.02

※ Maximum brightness : 25~40 F/L.

- With full white pattern.(800×600 mode, fH=37.8KHz)
- Brightness V/R : Set to maximum.
- Contrast V/R : Set to maximum.
- Checking area : Center of display.

※ Minimum brightness : Less than 3 F/L.

- With full white pattern.(800×600 mode, fH=37.8KHz)
- Brightness V/R : Set to minimum.
- Contrast V/R : Set to minimum.
- Checking area : Center of display.

5. FLASHOVER PROTECTION.

Due to the high voltage in this tube(CRT), internal flashover occurrs.

Protection must be provided using spartk gap to prevent flashover from destroying the cathode or other internal circuits.

These spark gaps shall be connected with electrode in socket PCB assembly.

6. X-RADIATION

The X-radiation emitted from this pocture tube will not exceed 0.5mR/h for anode currnet combination

X-radiation at a constant anode with the varies linearly with anode current.

6-1. The system will comply with the following international standards.

* DHHS 21 CFR SUB CH J
* SWEDAC MPR 1990 : 8. 10. SEC2

4. TROUBLE SHOOTING

1. NO RASTER

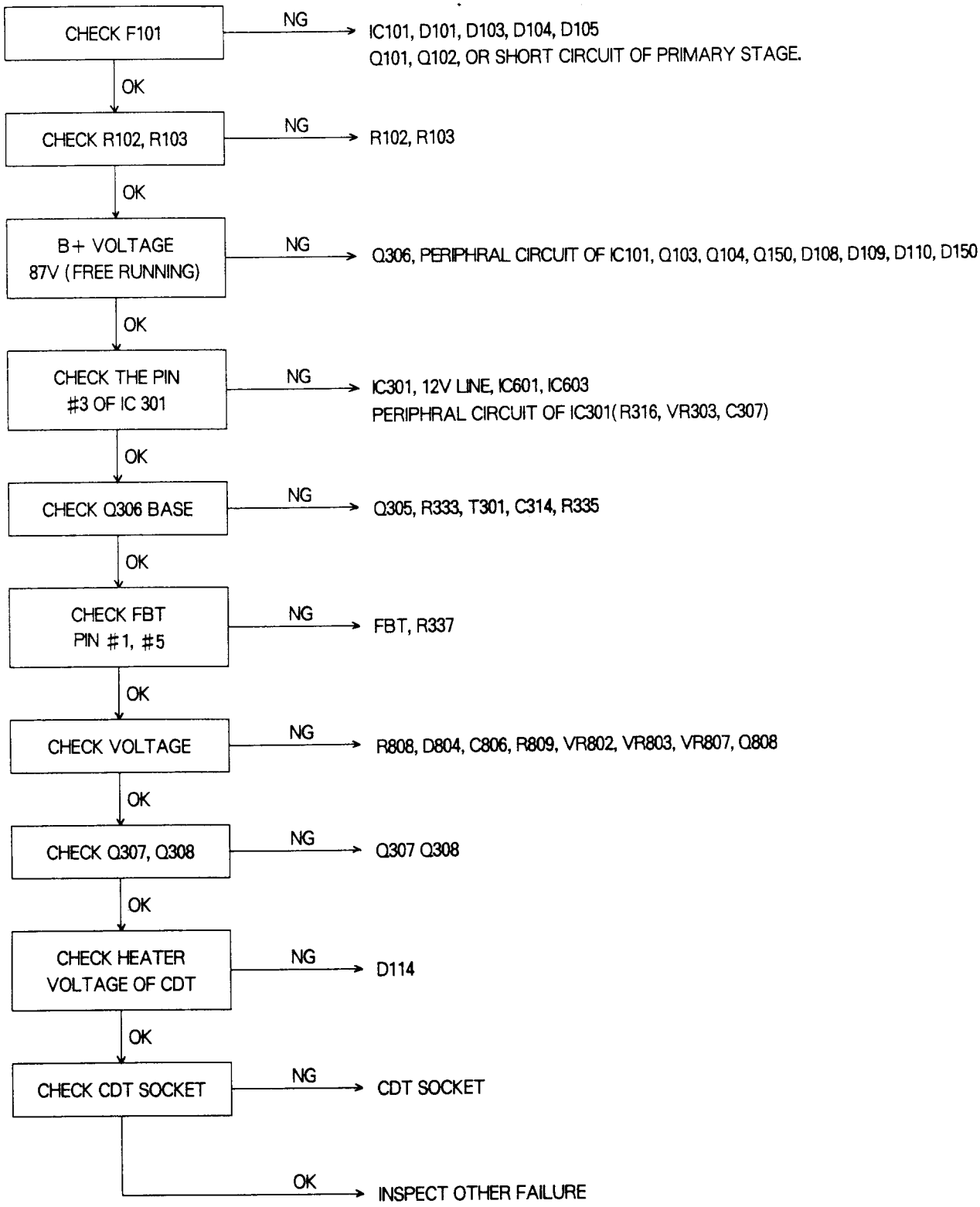

2. UNSTABLE HORIZONTAL HOLD

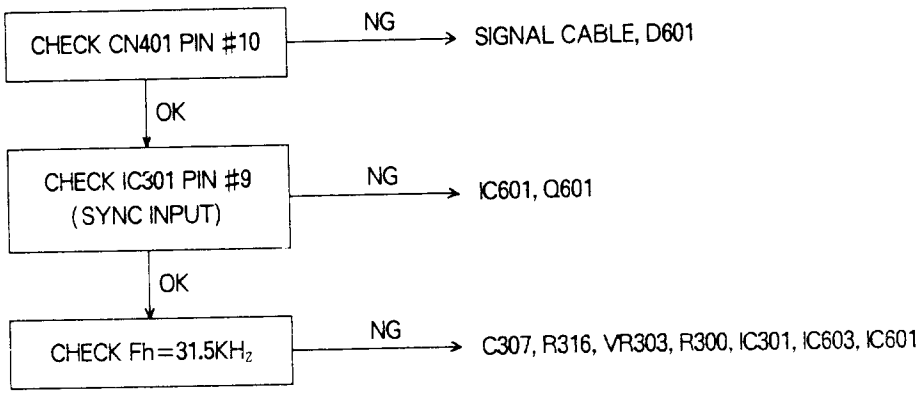

3. UNSTABLE VERTICAL HOLD

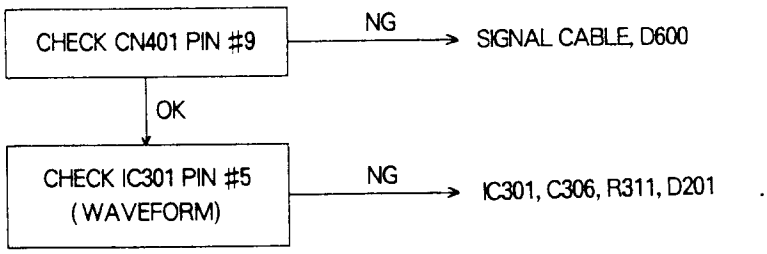

4. NO VERTICAL SCANNING

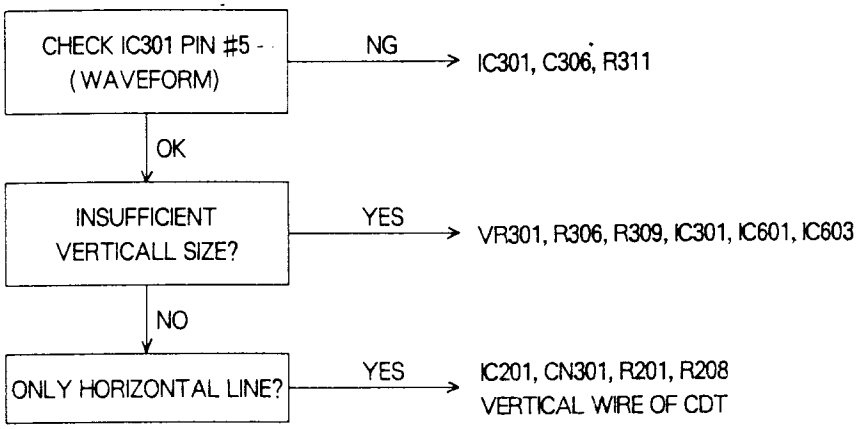

5. DEFECTIV DISPLY COLOR

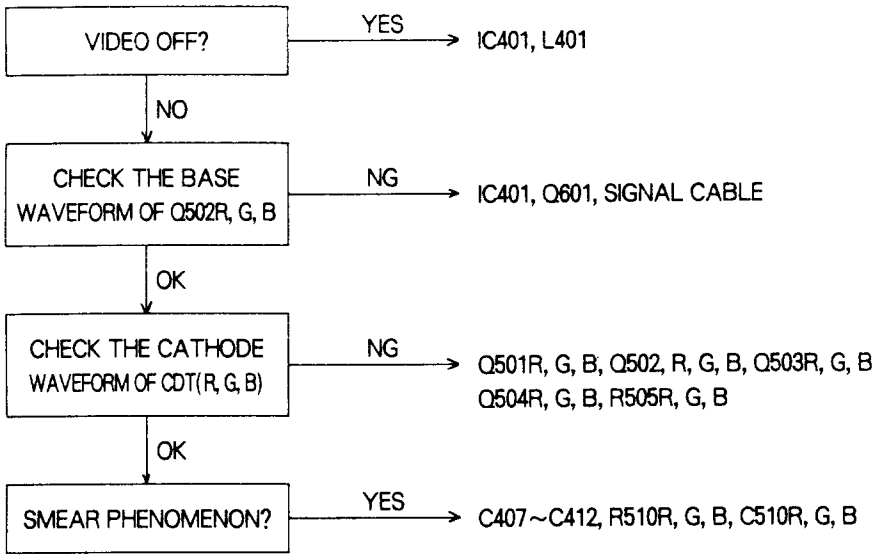

6. DEFECTIV DISPLY (SIZE, LINEARITY, DISTORTION)

(1) SIZE

DEFECTIVE HORIZONTAL SIZE —NG→ Q802, Q801, Q803, IC603, VR801

DEFECTIVE VERTICAL SIZE —NG→ VR301, IC301, R202, R204

(2) LINEARITY

DEFECTIVE VERTICAL LINEARITY —NG→ D201, R209

(3) SEVERE DISTORTION

UPPER PART? —YES→ IC201, R201

LOWER PART? —YES→ IC201

(4) BLANKING CLIP

IS THERE RETRACE LINE? —YES→ Q805, C811, ZD801

(5) BEAM SPOT

BEAM SPOT AT POWER-OFF? —YES→ R808, D804

5. OPERATION OF CIRCUIT

The circuit of this monitor could be divided into four sections.
One of them is power supply section, and the others are the interface, sweep video, and CDT drive section.

1. POWER CIRCUIT.

The switching mode power supply is adopted for this circuit.
The chassis(secondary side) is insulated from the power source(primary side) by the transformer T101.
By the winding of the transformer T101 connected to the collector of IC101 and the other winding connected to the control circuit, the IC101 is submitted to negative feed back and it operates as a blocking oscillator.
When the voltage of power source or load current is varied, it is detected by the winding and the voltage is applied to PIN #2 of IC101.
When the voltage applied to PIN #2 is varied, the conducting time of IC101 is varied to compensate output voltage for the change.
Which makes output voltage of T101 stabilized.
The range of operating frequency is 20KHz~70KHz.

2. DPMS CIRCUIT.

2-1. SUSPEND MODE

If the H or V sync input is inactive for more than 2 seconds, the output of MCU (87C751) PIN 20. becomes high, and the output voltage of IC102 drops to 1V(approx.) form 12V.
Therefore the horizontal deflection circuit, the high-voltage generation circuit and the video amp. circuit can not operate.
At this mode, the voltage of heater becomes to 4-5V, which could increase the lifetime of heater. At this suspend mode, the LED on the front of this unit blinks alternately between on and off as 1 second period.
The power consumption at suspend mode is less than 30W.

2-2. POWER OFF MODE

If both of H and V sync inactive for more than 2 seconds, the output of 87C751 PIN #1 becomes low. Then IC104 is ON and Q114 is off, SO switching transistor of SMPS becomes off. At this power off mode, the LED on the front of this unit blinks alternately between on and off. as 2seconds period. The power consumption at power off mode is less than 5W.

*Inactive signal : H-sync – Less than 25% duty cycle, 10KHz repetition frequency.
V-sync – Less than 25% duty cycle, 15Hz repetition frequency.

3. Interface circuit

According to H, V input sync. signal,

*IC602(sync. detector, 74LS86)'s PIN #3 and #8 generates the positive sync. signals.
*The sync. signal be input to IC301(deflection process, 4852)'s PIN #9 and #10 and IC601(MCU, 87C751)'s PIN #18 and #19
*According to input sync signal .IC601 controls the interface circuit which is related with mode classification, storing and output of screen adjustment data
*IC603(DAC, TDA8444) generates the 0~12V DC voltage in accordance with screen adjustment data from IC601. The 0~12V DC voltage used for the variation of screen size, screen shift, side-pincushion, H-freq. hold.
*X601 generates the sync. signal for IC601.

4. VIDEO DRIVE CIRCUIT.

The R. G. B input signals with analog level are applied to the pre-amplifier LM1203.
This section amplifies the output signal of a generator enough to drive a video output circuit.
Video gain is controlled by the DC voltage of PIN #12 and DC bias is controlled by the DC voltage of the PIN #15, #19 and #24.
Clamping pulse is applied to PIN #14 through Q601.

5. VIDEO OUTPUT CIRCUIT.

The preamplified R. G. B video signals are applied to the amplifier Q502R. G. B and then, these video signals are drived to the cathodes of CRT through the single-ended-push-pull amplifiers. The CRT bias for correct white balance is obtaine by R. G. B-bias controls VR501R. G. B

6. DEFLECTION CIRCUIT.

This circuit has two ICs. IC301(TDA4852) is a monolithic IC for horizontal and vertical sync. processing. And IC201 is a monolithic IC for vertical power amplifier.

6-1. Vertical Deflection Circuit.

The vertical sync. signal is applied to PIN #10 of IC301, the vertical frequency of the oscillator can be varied by the RC constant at PIN #15, #16. Vertical screen size can be controlled by the voltage at PIN #13 of IC301, and vertical screen position is determined by DC current flowing through vertical DY, and can be controlled VR201.

IC201 is the vertical power amplifier that drives vertical DY.

6-2. Horizontal Deflection Circuit.

The horzontal sync. signal with positive polarity is applied to PIN #9 of IC301.

The horizontal frequency of the oscillator can be controlled by the voltage at PIN #18 of IC301.

VR301 adjusts the free-running frequency and MCU traces the horizontal syncronization according to input signal(30KHz~62KHz).

The phase of horizontal saw-tooth wave is compared with that of fly back pulse and horizontal sync. signal at AFC circuit of the IC301.

By adjusting the voltage of PIN #20, the horizontal position of picture is varied.

The horizontal frequency oscillation is obtained from PIN #17 of IC301.

The output of IC301 comes out of PIN #3 and is fed to the horizontal drive circuit.

The horizontal output circuit uses a resonant flyback system to dirve the deflection yoke.

6-3. EHT Generator Circuit.

The output of horizontal dirve circuit is fed to the resonant flyback system which generates EHT voltages to dirve. CDT.

7. SIDE-PINCUSHION AND TRAPEZOIDAL DISTORTION CORRECTOR.

This circuit compensates the east/west distortion through the mathod of diode modulation.

The signal processing of east/west correction is done in IC301.

The parabola waveform that is convered from vertical ramp is fed PIN #11 of IC301 to Q801.

The parabola amplitude can be controlled by DC voltage at PIN #14 OF IC301.

The east/west correction is adjusted by DC voltage of integrator input.

6. CDT

2-1. STRUCTURE

CRT Basic Structure

Figure 2-1. The struture of CDT

- MASK : R. G. B. electron beam pass through this mask. Each gun's beam strikes the phosphor.
- DY (Deflection Yoke) : This moves the beam right to left and up to below, vice versa.
- MAGNET : These magnets decide the centering and convergence
- MOUNT : This generates thermal electrons, controls the amount of beam, accelerates the beam and focuses the beam at the screen.

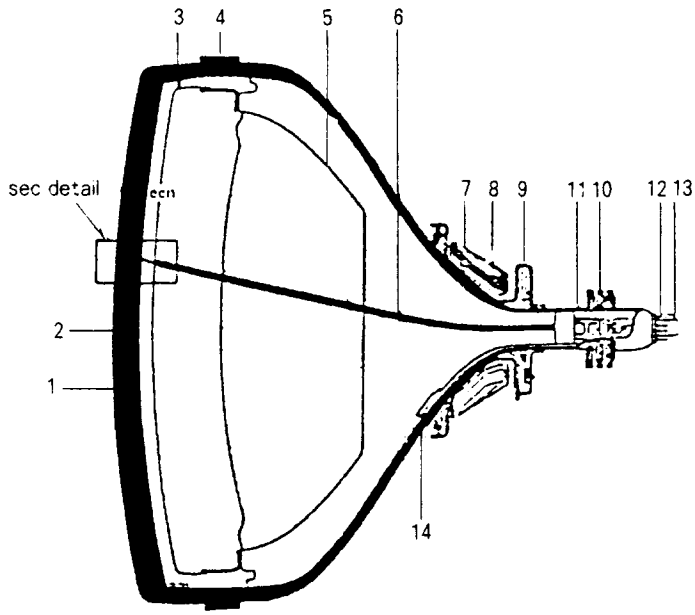

No.
1. Panel galss.
2. Phosphor screen
3. Shadow mask
4. Tension band
5. Magnetic shield
6. Electron beam
7. Core
8. Vertical deflection coil
9. Horizontal deflection coil
10. Magnel assembly
11. Electron gun
12. Outer lead
13. Base
14. Getter

- MASK : R. G. B. electron beam pass through this mask. Each gun's beam strikes the phosphor.
- DY (Deflection Yoke) : This moves the beam right to left and up to below, vice versa.
- MAGNET : These magnets decide the centering and convergence
- MOUNT : This generates thermal electrons, controls the amount of beam, accelerates the beam and focuses the beam at the screen.

2-2. MOUNT Assembly[C. P. M(convergence purity magent)]

2POLE, 4POLE, 6POLE

1) 2 pole magnet : purity and VRS control.
2) 4 pole magnet : Convergence control-concentrates the R and Bbeam.
3) 6 pole magnet : Convergence control-the concentrated R and B beam by 4 pole magnet is adjusted to harmonize with G beam.

*1. Convergence : The degree of concentration of R. G. B. colors.
2. Purity : The degree of pure color.

The most important part of monitor is CDT.

2-3. White Balance Adjustment

1) Adjust R and B bias controls in order that the color analyzer indicates
   X=0.281±0.02, Y=0.311±0.22 without video signal.
2) Apply video signal (Full Whith Pattern).
3) Adjust R and B gain controls in order that the color analyzer indicates
   X=0.281±0.02, Y=0.311±0.22 with max contrast.

7. FIGURES

(1) TIMING CHART

*SEPERATE

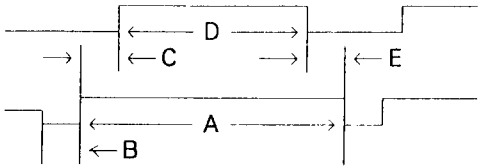

DESCRIPTION			RESOLUTION										
			640×350	640×400	640×480			800×600				1024 × 768 (I) N.I	
H	Hf	KHz	31.48	31.47	31.47	37.50	37.90	35.16	37.88	48.08	46.875	35.52	48.363
	A	uS	31.77	31.77	31.77	26.67	26.41	28.44	26.40	20.80	21.33	28.15	20.677
	B	uS	3.77	3.77	3.77	2.03	1.27	2.00	3.20	2.40	1.62	3.92	2.092
	C	uS	1.89	1.89	1.89	3.81	4.07	3.56	2.20	1.28	3.23	1.25	2.262
	D	uS	25.17	25.17	25.17	20.32	20.32	22.22	20.00	16.00	16.16	22.80	15.754
	E	uS	0.94	0.94	0.94	0.51	0.51	0.67	1.00	1.12	0.32	0.18	0.369
	POL.		POS.	NEG.	NEG.	NEG.	NEG.	P/N	POS.	POS.	POS.	POS.	NEG.
V	Vf	Hz	70	70	60	75	72.81	56	60.317	72.187	75	86.906	60
	A	mS	14.27	14.27	16.68	13.33	13.74	17.78	16.58	13.85	13.33	11.50	16.667
	B	mS	0.06	0.06	0.06	0.08	0.08	0.06	0.11	0.13	0.06	0.11	0.124
	C	mS	1.88	1.08	1.02	0.43	0.74	0.63	0.61	0.48	0.45	0.56	0.60
	D	mS	11.13	12.72	15.25	12.80	12.68	17.07	15.84	12.48	12.80	10.81	15.88
	E	mS	1.2	0.41	0.35	0.027	0.238	0.03	0.03	0.77	0.02	0.01	0.062
	POL.		NEG.	POS.	NEG.	NEG.	NEG.	P/N	POS.	POS.	POS.	POS.	NEG.

[2] BLOCK DIAGRAM

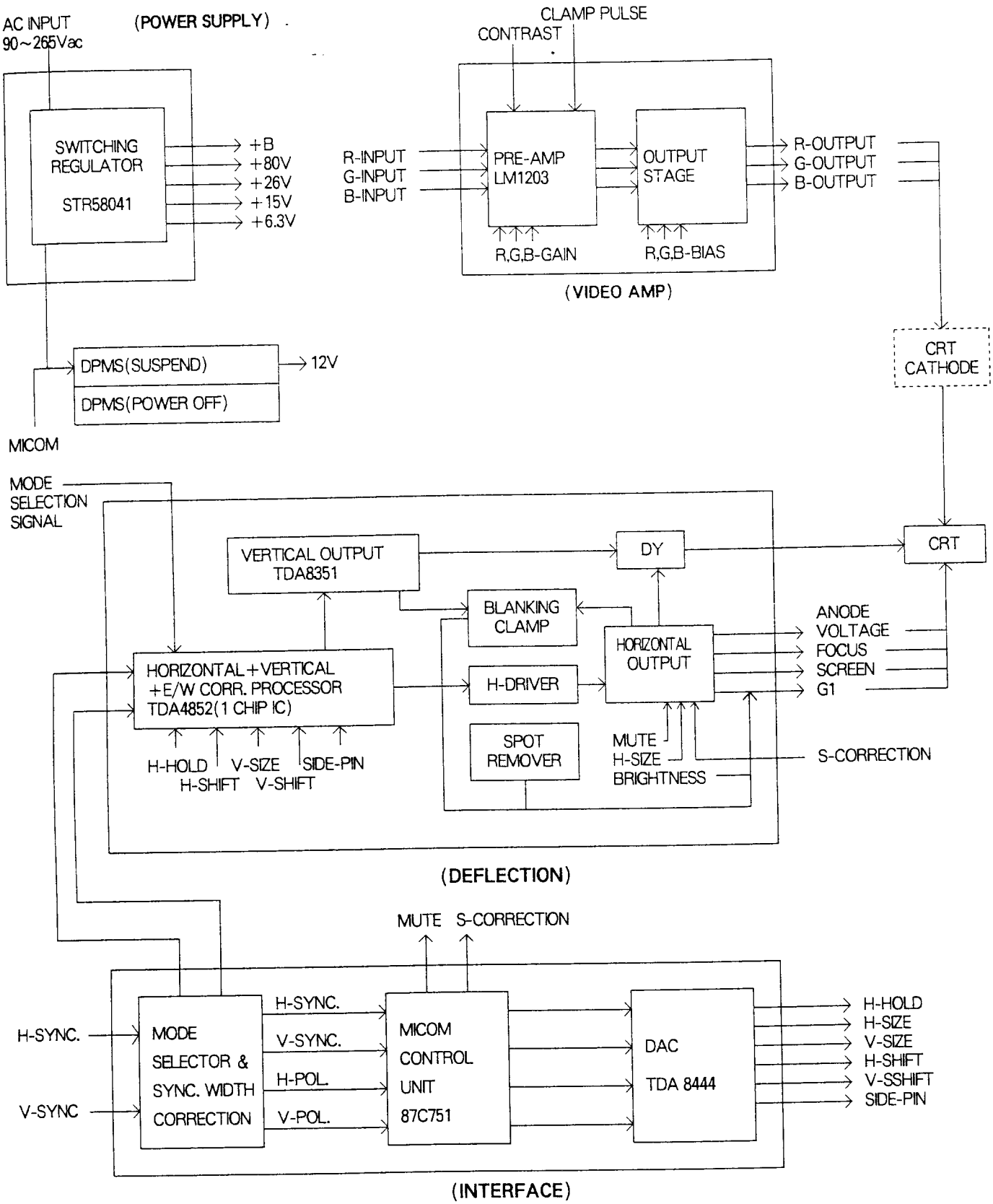

〔3〕 POSITION OF CONTROL PART IN MAIN PCB

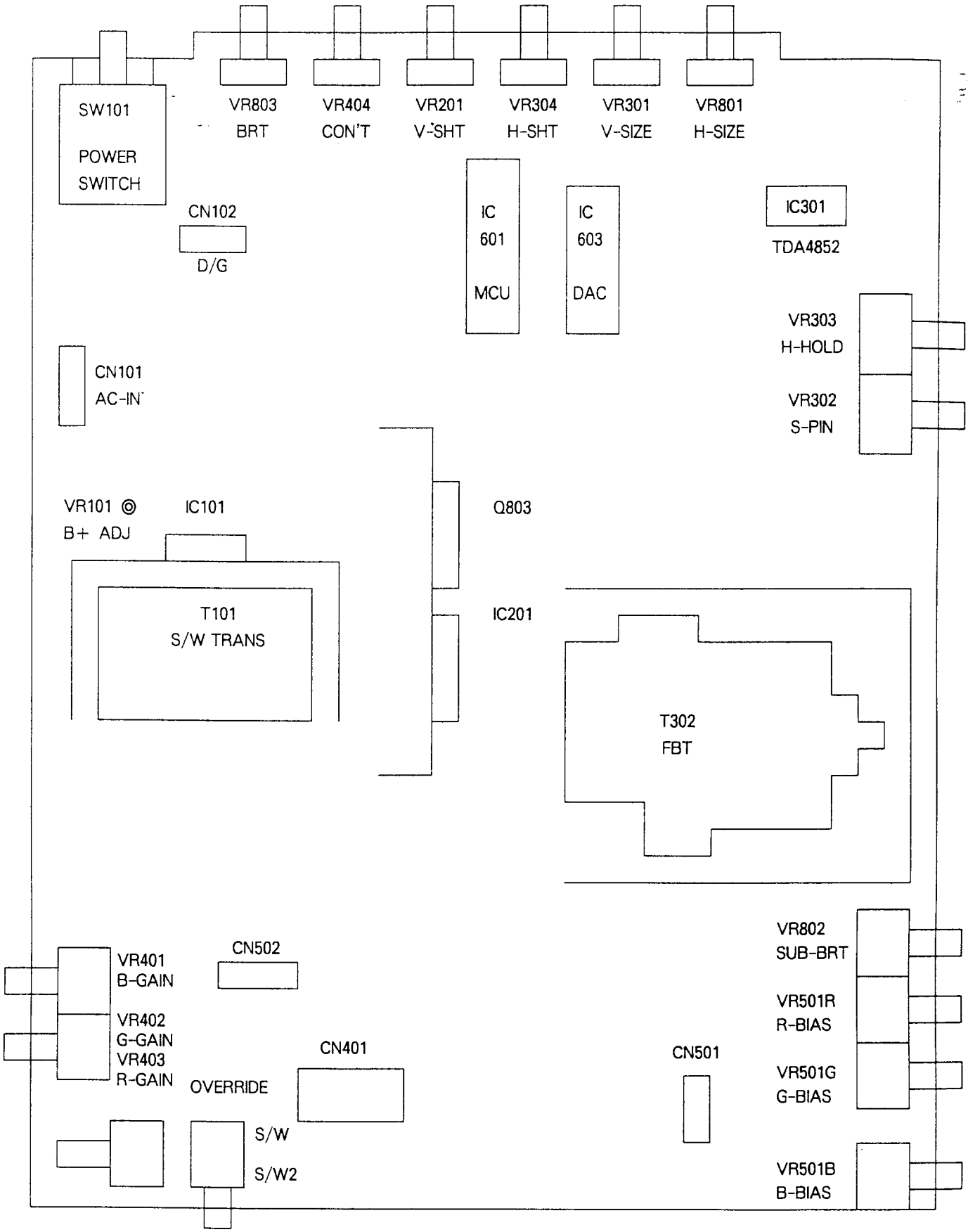

9. APPENDIX

(1) PARTS LIST

SUB ASS'Y, CDT

CKT NO.	P/N	DESCRIPTION	SPEC	ECO NO	DATE
	0116101443	SUB ASS'Y, HEAT SINK	KA317		
	0116101508	SUB ASS'Y, HEAT SINK	SC-428UXL, STR58041		
	0116101511	SUB ASS'Y, HEAT SINK	SC-528UXL/UXL, C-4762		
	0116111535	SUB ASS'Y, HEAT SINK	471P/472P, TDA8351, MJE800		
	0116101574	SUB ASS'Y, HEAT SINK	TOPAZ(N), RU4DS		
	0116101785	SUB ASS'Y, HEAT SINK	SC-428TX+/TXL+, 2SC3953E/D(311400621)		
	0117400167	SUB ASS'Y, BACK CHASSIS	SIENNA, AS SOCKET		
	0121100461	ASS'Y, CDT SC-428TX+	M34KUN35 * 03, 0.28D, 14", S/S, W/O		
	0121100856	ASS'Y, CDT SC-428TXL+	M34KUK35 × 03(E), 0.28D, 14", LF, VIMF, 380MG		
	0121101033	ASS'Y, CDT SC-428TXL+	M34KUK35 * 42(E), 0.28D, 14", LF, VIMF, 380MG		
	MG15100805	PCB ASS'Y	FREE, ANALG, M. V. S		
	MG15200805	PCB ASS'Y	FREE, ANALG, M. V. S		

MECHANICAL ASS'Y

CKT NO.	P/N	DESCRIPTION	SPEC	ECO NO	DATE
	0211100657	ASS'Y, HEAT SINK-N	471P/472P(3111400776, 3111900048)		
	0211100684	ASS'Y, BARK(FBT)	471P/472P(3121102197, 3111900051)		
	0211100696	ASS'Y, HEAT SINK(TRANS)	471P/472P(3114000701, 3111900051)		
	0211100749	ASS'Y, MAIN, CHASSIS, 470P 470AP	MAROON L.P		
	0212101586	ASS'Y, STAND-2, SC-428UX/L	OEM-3357(SAMTRON)		
	0212101598	ASS'Y, FRONT, SC-428TX+	OEM-3357		
	0212101603	ASS'Y, FRONT, SC-428TXL+	OEM-3357		
	0214101797	ASS'Y MANUAL USER'S, SC-428TX+/TXL+	SDI		
	0214102161	ASS'Y, MANUAL USER'S SC-428TX+/L+	EUROPE		

CAPACITOR

CKT NO.	P/N	DESCRIPTION	SPEC	ECO NO	DATE
C101	1336393342	CAP, METALZ-PP	0.33UF, +/−10%, 250VAC, −25'C/+85'C, RT		
C102	1336392226	CAP, METALZ-PP	2200PF, +/→10%, 250VAC, −25'C/+85'C, RT		
C103	1336392226	CAP, METALZ-PP	2200PF, +/−10%, 250VAC, −25'C/+85'C, RT		
C105	1133102277	CAP, AL-ELECT, STICK	2200UF, 20%, 400V, −40/85'C, PT		
C106	1336504734	CAP, METALZ-PP	0.047UF, 800V, 5%, RT		
C107	1237101033	CAP, DISC, CERAMIC, CK	0.01UF, −20/80%, 50V, −25/85'C, RT		
C108	111950336B	CAP, AL-ELECT, GP	33UF, 20%, 50V, −40/85'C, RT, SMALL		
C109	111950475B	CAP, AL-ELECT, GP	4.7UF, 20%, 50V, −40/85'C, RT, SMALL		
C110	1230704722	CAP, DISC CERAMIC, CK	4700PF, 20%, 400VAC, −25/85'C, RT		
C111	1230704722	CAP, DISC CERAMIC, CK	4700PF, 20%, 400VAC, −25/85'C, RT		
C112	1233402716	CAP, DISC CERAMIC, CK-45	270PF, 10%, 500V, −25/85'C, RT		
C113	1119601072	CAP, AL-ELECT, GP	100UF, 100V, 20%, −40/85'C, RT		
C114	1233501033	CAP, DISC, CERAMIC, CK	0.01UF, −20/80%, 500V, −25/85'C, RT		
C115	111920106B	CAP, AL-ELECT, GP	10UF, 20%, 16V, −40/85'C, RT,SMALL		
C116	1119701072	CAP, AL-ELECT, GP	100UF, 20%, 160V, −40/85'C, RT		
C118	1119701072	CAP, AL-ELECT, GP	100UF, 20%, 160V, −40/85'C, RT		
C119	111940476B	CAP, AL-ELECT, GP	47UF, 20%, 35V, −40/85'C, RT, SMALL		
C120	111940476B	CAP, AL-ELECT, GP	47UF, 20%, 35V, −40/85'C, RT, SMALL		
C122	1233402716	CAP, DISC CERAMIC, CK-45	270PF, 10%, 500V, −25/85'C, RT		
C124	1119301084	CAP, AL-ELECT, GP	1000UF, 25V, 20%, −40/85'C, RT		
C125	1119204773	CAP, AL-ELECT, GP	470UF, 16V, 20%, −40/85'C, RT		
C126	1237101045	CAP, DISC CERAMIC, CK-45	0.1UF, −20/80%, 50V, −25/85'C, RT		
C128	1119304773	CAP, AL-ELECT, GP	470UF, 20%, 25V, −40/85'C, RT		
C129	1119402277	CAP, AL-ELECT, GP	220UF, 20%, 35V, −40/85'C, RT		
C130	111920107B	CAP, AL-ELECT, GP	100UF, 20%, 16V, −40/85'C, RT, SMALL		
C132	1237101045	CAP, DISC, CERAMIC, CK-45	0.1UF, −20/80%, 50V, −25/85'C, RT		
C133	1233402716	CAP, DISC, CERAMIC, CK-45	270PF, 10%, 500V, −25/85'C, RT		
C149	131620334B	CAP, MTALZ-POLYESTER	0.33UF, 100V, 10%, RT		
C150	111950476B	CAP, AL-ELECT, GP	47UF, 20%, 50V, −40/85'C, RT, SMALL		
C201	1119402277	CAP, AL-ELECT, GP	220UF, 20%, 35V, −40/85'C, RT		
C202	1237101045	CAP, DISC CERAMIC, CK-45	0.1UF, −20/80%, 50V, −25/85'C, RT		
C204	1218204707	CAP, DISC CERAMIC, CC	47PF, 5%, 50V, −25/85'C, RT		
C205	1119304773	CAP, AL-ELECT, GP	470UF, 20%, 25V, −40/85'C, RT		
C206	1237101045	CAP, DISC CERAMIC, CK-45	0.1UF, −20/80%, 50V, −25/85'C, RT		
C207	1312604734	CAP, IND-POLYESTER	0.047UF, 10%, 100V, −, RT		
C301	1237101045	CAP, DISC CERAMIC, CK-45	0.1UF, −20/80%, 50V, −25/85'C, RT		

CAPACITOR

CKT NO.	P/N	DESCRIPTION	SPEC	ECO NO	DATE
C302	1119204473	CAP, AL-ELECT, GP	470UF, 16V, 20%, −40/85'C, RT		
C303	131620104B	CAP, METALZ-POLYESTER	0.1UF, 100V, 10%, RT		
C304	1312604734	CAP, IND-POLYESTER	0.047UF, 10%, 100V, −, RT		
C305	1312601021	CAP, IND-POLYESTER	0.001UF, 10%, 100V, RT		
C306	1312201045	CAP, IND-POLYESTER	0.1UF, 5%, 100V, RT		
C307	1318201033	CAP, METALZ POLYRSTER	0.01UF, 5%, 100V, RB		
C308	1312604734	CAP, IND-POLYESTER	0.047UF, 10%, 100V, −, RT		
C309	1218203303	CAP, DISC CERAMIC, CC45	33PF, 5%, 50V, −25/85'C, RT, TC		
C312	111940476B	CAP, AL-ELECT, GP	47UF, 20%, 35V, −40/85'C, RT, SMALL		
C313	1312601523	CAP, IND-POLYESTER	0.0015UF, 10%, 100V, RT, CQ92MT		
C314	1119401072	CAP, AL-ELECT, GP	100UF, 20%, 35V, −40/85'C, RT		
C315	1312604722	CAP, IND-POLYESTER	0.0047UF, 10%, 100V, RT		
C316	1331704428	CAP, PP-HIGH	4400PF, 5%, 1.6KV, RB		
C318	1331708226	CAP, PP-HIGH-VOL	8200PF, 5%, 1.6KV, RB		
C321	1233301021	CAP, DISC CERAMIC, CK	1000PF, 10%, 1KV, −25/85'C, RT		
C322	1119701069	CAP, AL-ELECT, GP	10UF, 20%, 160V, −40/85'C, RT		
C323	1335403342	CAP, METALZ-PP	0.33UF, 5%, 250V, RB		
C324	1158204758	CAP, AL-ELECT, BP, CROSS	4.7UF, 20%, 25V, −40/85'C, RB		
C325	111930106B	CAP, AL-ELECT, GP	10UF, 20%, 25V, −40/85'C, RT, SMALL		
C326	1312601033	CAP, IND-POLYESTER	0.01UF, 10%, 100V, RT, CQ92MT		
C329	1335403342	CAP, METALZ-PP	0.33UF, 5%, 250V, RB		
C330	1312602238	CAP, IND-POLYESTER	0.022UF, 10%, 100V, −, RT		
C401	111920106B	CAP, AL-ELECT, GP	10UF, 20%, 16V, −40/85'C, RT, SMALL		
C402	111920106B	CAP, AL-ELECT, GP	10UF, 20%, 16V, −40/85'C, RT, SMALL		
C403	111920106B	CAP, AL-ELECT, GP	10UF, 20%, 16V, −40/85'C, RT, SMALL		
C404	111920107B	CAP, AL-ELECT, GP	100UF, 20%, 16V, −40/85'C, RT, SMALL		
C405	1237101045	CAP, DISC CERAMIC, CK-45	0.1UF, −20/80%, 50V, −25/85'C, RT		
C406	111950475B	CAP, AL-ELECT, GP	4.7UF, 20%, 50V, −40/85'C, RT, SMALL		
C407	1312601045	CAP, IND-POLYESTER	0.1UF, 10%, 100V, RT, CQ92MT		
C409	1312601045	CAP, IND-POLYESTER	0.1UF, 10%, 100V, RT, CQ92MT		
C410	1237101045	CAP, DISC CERAMIC, CK-45	0.1UF, −20/80%, 50V, −25/85'C, RT		
C411	1237101045	CAP, DISC CERAMIC, CK-45	0.1UF, −20/80%, 50V, −25/85'C, RT		
C412	1237101045	CAP, DISC CERAMIC, CK-45	0.1UF, −20/80%, 50V, −25/85'C, RT		
C413	1237101045	CAP, DISC CERAMIC, CK-45	0.1UF, −20/80%, 50V, −25/85'C, RT		
C415	1237101045	CAP, DISC CERAMIC, CK-45	0.1UF, −20/80%, 50V, −25/85'C, RT		
C419R, G, B	1219101018	CAP, DISC CERAMIC, CC45	100PF, 10%, 50V, −25/85'C, RT, TC		

CAPACITOR

CKT NO.	P/N	DESCRIPTION	SPEC	ECO NO	DATE
C420	1237101045	CAP, DISC CERAMIC, CK-45	0.1UF, −20/80%, 50V, −25/85'C, RT		
C502R, G, B	1219101018	CAP, DISC CERAMIC, CC45	100PF, 10%, 50V, −25/85'C, RT, TC		
C504R, G, B	1233104722	CAP, DISC CERAMIC, CK	4700PF, 10%, 50V, −25/85'C, RT		
C505R, G, B	111950105B	CAP, AL-ELECT, GP	1UF, 20%, 50V, −40/85'C, RT, SMALL		
C506	1119601072	CAP, AL-ELECT, GP	100UF, 100V, 20%, −40/85'C, RT		
C507	1233501033	CAP, DISC CERAMIC, CK	0.01UF, −20/80%, 500V, −25/85'C, RT		
C508	1233501033	CAP, DISC CERAMIC, CK	0.01UF, −20/80%, 500V, −25/85'C, RT		
C509	1233202728	CAP, DISC CERAMIC, CK	2700PF, 10%, 2KV, −25/85'C, RT		
C510R, G, B	1219301006	CAP, DISC CERAMIC, CC	10PF, 5%, 500V, −25/85'C, RT		
C511G	1218204707	CAP, DISC CERAMIC, CC	47PF, 5%, 50V, −25/85'C, RT		
C511RB	1218205609	CAP, DISC CERAMIC, CC	56PF, 5%, 50V, −25/85'C, RT		
C512	111960106B	CAP, AL-ELECT, GP	10UF, 20%, 100V, −40/85'C, RT, SMALL		
C601	111920106B	CAP, AL-ELECT, GP	10UF, 20%, 16V, −40/85'C, RT, SMALL		
C602	111920106B	CAP, AL-ELECT, GP	10UF, 20%, 16V, −40/85'C, RT, SMALL		
C603	1312601045	CAP, IND-POLYESTER	0.1UF, 10%, 100V, RT, CQ92MT		
C604	1219101018	CAP, DISC CERAMIC, CC45	100PF, 10%, 50V, −25/85'C, RT, TC		
C605	111920106B	CAP, AL-ELECT, GP	10UF, 20%, 16V, −40/85'C, RT, SMALL		
C606	1218203303	CAP, DISC CERAMIC, CC45	33PF, 5%, 50V, −25/85'C, RT, TC		
C607	1218203303	CAP, DISC CERAMIC, CC45	33PF, 5%, 50V, −25/85'C, RT, TC		
C608	111920107B	CAP, AL-ELECT, GP	100UF, 20%, 16V, −40/85'C, RT, SMALL		
C610	1237101045	CAP, DISC CERAMIC, CK-45	0.1UF, −20/80%, 50V, −25/85'C, RT		
C611	1237101045	CAP, DISC CERAMIC, CK-45	0.1UF, −20/80%, 50V, −25/85'C, RT		
C612	111920107B	CAP, AL-ELECT, GP	100UF, 20%, 16V, −40/85'C, RT, SMALL		
C801	1312602226	CAP, IND-POLYESTER	0.0022UF, 10%, 100V, RT, CQ92MT		
C802	111950105B	CAP, AL-ELECT, GP	1UF, 20%, 50V, −40/85'C, RT, SMALL		
C803	131620104B	CAP, METALZ-POLYESTER	0.1UF, 100V, 10%, RT		
C804	1312601045	CAP, IND-POLYESTER	0.1UF, 10%, 100V, RT, CQ92MT		
C805	1233402716	CAP, DISC CERAMIC, CK-45	270PF, 10%, 500V, −25/85'C, RT		
C806	1119801069	CAP, AL-ELECT, GP	10UF, 20%, 250V, −40/85'C, RT		
C807	131620334B	CAP, METALZ-POLYESTER	0.33UF, 100V, 10%, RT		
C808	1312604722	CAP, IND-POLYESTER	0.0047UF, 10%, 100V, RT		
C809	1312601021	CAP, IND-POLYESTER	0.001UF, 10%, 100V, RT		
C810	111950336B	CAP, AL-ELECT, GP	33UF, 20%, 50V, −40/85'C, RT, SMALL		
C811	1315601045	CAP, METALZ-POLYESTER	0.1UF, 10%, 400VAC, RB		
C812	1312602238	CAP, IND-POLYESTER	0.022UF, 10%, 100V, −, RT		
C813	1312601045	CAP, IND-POLYESTER	0.1UF, 10%, 100V, RT, CQ92MT		

CAPACITOR

CKT NO.	P/N	DESCRIPTION	SPEC	ECO NO	DATE
C814	1312604734	CAP, IND-POLYESTER	0.047UF, 10%, 100V, −, RT		
C818	111950105B	AL-ELECT, GP	1UF, 20%, 50V, −40/85'C, RT, SMALL		
R211	1312101045	CAP, DISC CERAMIC, CK-45	0.1UF, −20/80%, 50V, −25/85'C, RT		
R212	1312101045	CAP, DISC CERAMIC, CK-45	0.1UF, −20/80%, 50V, −25/85'C, RT		
R309	1312101045	CAP, DISC CERAMIC, CK-45	0.1UF, −20/80%, 50V, −25/85'C, RT		
R604	1312101045	CAP, DISC CERAMIC, CK-45	0.1UF, −20/80%, 50V, −25/85'C, RT		
R806	1312101045	CAP, DISC CERAMIC, CK-45	0.1UF, −20/80%, 50V, −25/85'C, RT		
SG501	139110002B	CAP, SPARK-GAP	1KV, S-23		

FIXED RESISTOR

CKT NO.	P/N	DESCRIPTION	SPEC	ECO NO	DATE
R100	143360221B	RES, METAL OXIDE, AT	220 OHM, 1W, 5% 63MM TAPING		
R101	1414201057	RES, CARBON, AT	1M OHM, 1/2W, 5%		
R102	1412202743	RES, CARBON, AT	270K OHM, 1/2W, 5%		
R103	1414202743	RES, CARBON, AT	270K OHM, 1/2W, 5%		
R104	1434606832	RES, METAL OXIDE, AT	68K OHM, 2W, 5%, 63MM TAPING		
R105	1414203303	RES, CARBON, AT	33 OHM, 1/2W, 5%		
R106	146460R336	RES, WIRE WOUND, AT	0.33 OHM, 1W, 5%, 63MM TAPING		
R107	1413403303	RES, CARBON, AT	33 OHM, 1/4W, 5%		
R108	1413401021	RES, CARBON, AT	1K OHM, 1/4W, 5%		
R109	1435506805	RES, METAL OXIDE, AT	68 OHM, 3W, 5%, 63MM		
R110	1413401021	RES, CARBON, AT	1K OHM, 1/4W, 5%		
R111	1413403303	RES, CARBON, AT	33 OHM, 1/4W, 5%		
R112	1413401511	RES, CARBON, AT	150 OHM, 1/4W, 5%		
R113	1413401547	RES, CARBON, AT	150K OHM, 1/4W, 5%		
R114	1413401547	RES, CARBON, AT	150K OHM, 1/4W, 5%		
R115	1413402238	RES, CARBON, AT	22K OHM, 1/4W, 5%		
R116	1413405636	RES, CARBON, ATE	56K OHM, 1/4W, 5%		
R117	1413401021	RES, CARBON, ATE	1K OHM, 1/4W, 5%		

FIXED RESISTOR

CKT NO.	P/N	DESCRIPTION	SPEC	ECO NO	DATE
R118	1413401229	RES, CARBON, AT	1.2K OHM, 1/4W, 5%		
R119	1413401021	RES, CARBON, AT	1K OHM, 1/4W, 5%		
R120	1413401229	RES, CARBON, AT	1.2K OHM, 1/4W, 5%		
R121	1412101232	RES, CARBON, AT	12K OHM, 1/6W, 5%		
R122	1413403912	RES, CARBON, AT	390 OHM, 1/4W, 5%		
R123	1412101033	RES, CARBON, AT	10K OHM, 1/6W, 2%		
R124	1414204746	RES, CARBON, AT	470K OHM, 1/2W, 5%		
R125	1413301309	RES, CARBON, AT	13 OHM, 1/4W, 2%		
R126	1413405636	RES, CARBON, AT	56K OHM, 1/4W, 5%		
R127	1412102238	RES, CARBON, AT	22K OHM, 1/6W, 5%		
R128	1414201508	RES, CARBON, AT	15 OHM, 1/2W, 5%		
R129	1414202214	RES, CARBON, AT	220 OHM, 1/2W, 5%		
R131	1412101021	RES, CARBON, AT	1K OHM, 1/6W, 5%		
R132	1412104722	RES, CARBON, AT	4.7K OHM, 1/6W, 5%		
R133	1412101021	RES, CARBON, AT	1K OHM, 1/6W, 5%		
R134	1412101021	RES, CARBON, AT	1K OHM, 1/6W, 5%		
R135	1412104722	RES, CARBON, AT	4.7K OHM, 1/6W, 5%		
R136	1412104722	RES, CARBON, AT	4.7K OHM, 1/6W, 5%		
R137	1413302214	RES, CARBON, AT	220 OHM, 1/4W, 2%		
R138	1413301826	RES, CARBON, AT	1.8K OHM, 1/4W, 2%		
R139	1412101033	RES, CARBON, AT	10K OHM, 1/6W, 5%		
R141	141420R508	RES, CARBON, AT	0.5 OHM, 1/2W, 5%		
R146	1413401511	RES, CARBON, AT	150 OHM, 1/4W, 5%		
R147	1413401511	RES, CARBON, AT	150 OHM, 1/4W, 5%		
R148	1412101523	RES, CARBON, AT	1.5K OHM, 1/6W, 5%		
R150	1413405636	RES, CARBON, AT	56K OHM, 1/4W, 5%		
R151	1413401021	RES, CARBON, AT	1K OHM, 1/4W, 5%		
R152	1413401229	RES, CARBON, AT	1.2K OHM, 1/4W, 5%		
R162	143360223B	RES, METAL OXIDE, AT	22K OHM, 1W, 5%, 63MM TAPING		
R163	1414203303	RES, CARBON, AT	33 OHM, 1/2W, 5%		
R201	1414201018	RES, CARBON, AT	100 OHM, 1/2W, 5%		
R202	1412103327	RES, CARBON, AT	3.3K OHM, 1/6W, 5%		
R203	1414201511	RES, CARBON, AT	150 OHM, 1/2W, 5%		
R204	1414201R01	RES, CARBON, AT	1 OHM, 1/2W, 5%		
R205	1413401021	RES, CARBON, AT	1K OHM, 1/4W, 5%		
R208	141420R508	RES, CARBON, AT	0.5 OHM, 1/2W, 5%		

FIXED RESISTOR

CKT NO.	P/N	DESCRIPTION	SPEC	ECO NO	DATE
R209	1412101045	RES, CARBON, AT	100K OHM, 1/6W, 5%		
R210	1412101547	RES, CARBON, AT	150K OHM, 1/6W, 5%		
R300	1412106223	RES, CARBON, AT	6.2K OHM, 1/6W, 5%		
R301	1414201006	RES, CARBON, AT	10 OHM, 1/2W, 5%		
R302	1412101021	RES, CARBON, AT	1K OHM, 1/6W, 5%		
R303	1412101021	RES, CARBON, AT	1K OHM, 1/6W, 5%		
R304	1412101244	RES, CARBON, AT	120K OHM, 1/6W, 5%		
R305	1412106844	RES, CARBON, AT	680K OHM, 1/6W, 5%		
R306	1412101244	RES, CARBON, AT	120K OHM, 1/6W, 5%		
R307	1413401021	RES, CARBON, AT	1K OHM, 1/4W, 5%		
R308	1412103342	RES, CARBON, AT	330K OHM, 1/6W, 5%		
R310	1412101547	RES, CARBON, AT	150K OHM, 1/6W, 5%		
R311	1412102238	RES, CARBON, AT	22K OHM, 1/6W, 5%		
R312	1412101232	RES, CARBON, AT	12K OHM, 1/6W, 5%		
R313	1412105636	RES, CARBON, AT	56K OHM, 1/6W, 5%		
R316	1412101021	RES, CARBON, AT	1K OHM, 1/6W, 5%		
R320	1412101045	RES, CARBON, AT	100K OHM, 1/6W, 5%		
R321	1412102238	RES, CARBON, AT	22K OHM, 1/6W, 5%		
R323	1413402226	RES, CARBON, AT	2.2K OHM, 1/4W, 5%		
R324	1414201547	RES, CARBON, AT	150K OHM, 1/2W, 5%		
R325	1413404719	RES, CARBON, AT	470 OHM, 1/4W, 5%		
R330	1412101033	RES, CARBON, AT	10K OHM, 1/6W, 5%		
R332	1412105636	RES, CARBON, AT	56K OHM, 1/6W, 5%		
R333	1435502716	RES, METAL OXIDE, AT	270 OHM, 3W, 5%, 63MM		
R334	1413404719	RES, CARBON, AT	470 OHM, 1/4W, 5%		
R335	1414202R22	RES, CARBON, AT	2.2 OHM, 1/2W, 5%		
R336	1413404707	RES, CARBON, AT	47 OHM, 1/4W, 5%		
R337	1461501R01	RES, WIRE WOUND, AT	1 OHM, 2W, 5%, 63MM TAPING		
R338	143360271B	RES, METAL OXIDE, AT	270 OHM, 1W, 5%, 63MM TAPING		
R341	1413404734	RES, CARBON, AT	47K OHM, 1/4W, 5%		
R342	1412106829	RES, CARBON, AT	6.8K OHM, 1/6W, 5%		
R343	1412101021	RES, CARBON, AT	1K OHM, 1/6W, 5%		
R344	1412101021	RES, CARBON, AT	1K OHM, 1/6W, 5%		
R345	1412101033	RES, CARBON, AT	10K OHM, 1/6W, 5%		
R346	1412101033	RES, CARBON, AT	10K OHM, 1/6W, 5%		
R347	1412101033	RES, CARBON, AT	10K OHM, 1/6W, 5%		

FIXED RESISTOR

CKT NO.	P/N	DESCRIPTION	SPEC	ECO NO	DATE
R348	1412106829	RES, CARBON, AT	6.8K OHM, 1/6W, 5%		
R401	1412107508	RES, CARBON, AT	75 OHM, 1/6W, 5%		
R402	1412107508	RES, CARBON, AT	75 OHM, 1/6W, 5%		
R403	1412107508	RES, CARBON, AT	75 OHM, 1/6W, 5%		
R404	1412101523	RES, CARBON, AT	1.5K OHM, 1/6W, 5%		
R405	1412102226	RES, CARBON, AT	2.2K OHM, 1/6W, 5%		
R406	1412105624	RES, CARBON, AT	5.6K OHM, 1/6W, 5%		
R407	1413401838	RES, CARBON, AT	18K OHM, 1/4W, 5%		
R408	1412102728	RES, CARBON, AT	2.7K OHM, 1/4W, 5%		
R409	1412105107	RES, CARBON, AT	51 OHM, 1/6W, 5%		
R410	1412102214	RES, CARBON, AT	220 OHM, 1/6W, 5%		
R411	1412103912	RES, CARBON, AT	390 OHM, 1/6W, 5%		
R412	1412105107	RES, CARBON, AT	51 OHM, 1/6W, 5%		
R413	1412102214	RES, CARBON, AT	220 OHM, 1/6W, 5%		
R414	1412103912	RES, CARBON, AT	390 OHM, 1/6W, 5%		
R415	1412105107	RES, CARBON, AT	51 OHM, 1/6W, 5%		
R416	1412102214	RES, CARBON, AT	220 OHM, 1/6W, 5%		
R417	1412103912	RES, CARBON, AT	390 OHM, 1/6W, 5%		
R418	1412102728	RES, CARBON, AT	2.7K OHM, 1/6W, 5%		
R501R, G, B	1413404719	RES, CARBON, AT	470 OHM, 1/4W, 5%		
R502R, G, B	1412107508	RES, CARBON, AT	75 OHM, 1/6W, 5%		
R503R, G, B	1413401511	RES, CARBON, AT	150 OHM, 1/4W, 5%		
R504R, G, B	1435501229	RES, METAL OXIDE, AT	1.2K OHM, 3W, 5%, 63MM		
R506R, G, B	1451604707	RES, METAL, FUSIBLE, AT	47 OHM, 1/4W, 5%		
R507R, G, B	1451604707	RES, METAL, FUSIBLE, AT	47 OHM, 1/4W, 5%		
R508R, G, B	1413402731	RES, CARBON, AT	27K OHM, 1/4W, 5%		
R509R, G, B	1414201018	RES, CARBON, AT	100 OHM, 1/2W, 5%		
R510R, G, B	1412105636	RES, CARBON, AT	56K OHM, 1/6W, 5%		
R511R, G, B	1412107508	RES, CARBON, AT	75 OHM, 1/6W, 5%		
R512	1413401018	RES, CARBON, AT	100 OHM, 1/4W, 5%		
R600	1412101033	RES, CARBON, AT	10K OHM, 1/6W, 5%		
R601	1412101523	RES, CARBON, AT	1.5K OHM, 1/6W, 5%		
R602	1412102214	RES, CARBON, AT	220 OHM, 1/6W, 5%		
R603	1412101021	RES, CARBON, AT	1K OHM, 1/6W, 5%		
R605	1412102728	RES, CARBON, AT	2.7K OHM, 1/6W, 5%		
R606	1412101021	RES, CARBON, AT	1K OHM, 1/6W, 5%		

FIXED RESISTOR

CKT NO.	P/N	DESCRIPTION	SPEC	ECO NO	DATE
R607	1412101523	RES, CARBON, AT	1.5K OHM, 1/6W, 5%		
R608	1412102226	RES, CARBON, AT	2.2K OHM, 1/6W, 5%		
R609	1412106832	RES, CARBON, AT	68K OHM, 1/6W, 5%		
R610	1414201006	RES, CARBON, AT	10 OHM, 1/2W, 5%		
R611	1412104722	RES, CARBON, AT	4.7K OHM, 1/6W, 5%		
R612	1412102214	RES, CARBON, AT	220 OHM, 1/6W, 5%		
R614	1412107508	RES, CARBON, AT	75 OHM, 1/6W, 5%		
R620	1412108238	RES, CARBON, AT	82K OHM, 1/6W, 5%		
R801	1412102743	RES, CARBON, AT	270K OHM, 1/6W, 5%		
R802	1413401523	RES, CARBON, AT	1.5K OHM, 1/4W, 5%		
R803	1412104734	RES, CARBON, AT	47K OHM, 1/6W, 5%		
R804	1412101244	RES, CARBON, AT	120K OHM, 1/6W, 5%		
R805	1412101523	RES, CARBON, AT	1.5K OHM, 1/6W, 5%		
R807	1413405636	RES, CARBON, AT	56K OHM, 1/4W, 5%		
R808	1433602R2B	RES, METAL OXIDE, AT	2.2 OHM, 1W, 5%, 63MM TAPING		
R809	1414201547	RES, CARBON, AT	150K OHM, 1/2W, 5%		
R810	1413402743	RES, CARBON, AT	270K OHM, 1/4W, 5%		
R811	1413401021	RES, CARBON, AT	1K OHM, 1/4W, 5%		
R812	1413401523	RES, CARBON, AT	1.5K OHM, 1/4W, 5%		
R813	1412103339	RES, CARBON, AT	33K OHM, 1/6W, 5%		
R814	1413401523	RES, CARBON, AT	1.5K OHM, 1/4W, 5%		
R815	1414203303	RES, CARBON, AT	33 OHM, 1/2W, 5%		
R816	1412102226	RES, CARBON, AT	2.2K OHM, 1/6W, 5%		
R817	1412101021	RES, CARBON, AT	1K OHM, 1/6W, 5%		
R818	1414101021	RES, CARBON, AT	1K OHM, 1/4W, 5%		
R821	1413401045	RES, CARBON, AT	100K OHM, 1/4W, 5%		
R822	1412104722	RES, CARBON, AT	4.7K OHM, 1/6W, 5%		
R823	1412101021	RES, CARBON, AT	1K OHM, 1/6W, 5%		
R824	1412105624	RES, CARBON, AT	5.6K OHM, 1/6W, 5%		
R825	1412101523	RES, CARBON, AT	1.5K OHM, 1/6W, 5%		
R827	1414205648	RES, CARBON, AT	560K OHM, 1/2W, 5%		
R829	1413401511	RES, CARBON, AT	150 OHM, 1/4W, 5%		
R830	1412103339	RES, CARBON, AT	33K OHM, 1/6W, 5%		
R831	1412102238	RES, CARBON, AT	22K OHM, 1/6W, 5%		
R832	1412104722	RES, CARBON, AT	4.7K OHM, 1/6W, 5%		
R833	1412104746	RES, CARBON, AT	470K OHM, 1/6W, 5%		

FIXED RESISTOR

CKT NO.	P/N	DESCRIPTION	SPEC	ECO NO	DATE
R838	1413406832	RES, CARBON, AT	68K OHM, 1/4W, 5%		
R839	1413404734	RES, CARBON, AT	47K OHM, 1/4W, 5%		
R840	1412102238	RES, CARBON, AT	22K OHM, 1/6W, 5%		
R844	1412101057	RES, CARBON, AT	1M OHM, 1/6W, 5%		
R846	1413404734	RES, CARBON, AT	47K OHM, 1/4W, 5%		
R850	1412104722	RES, CARBON, AT	4.7K OHM, 1/6W, 5%		
R851	1412101057	RES, CARBON, AT	1M OHM, 1/6W, 5%		
R852	1412102226	RES, CARBON, AT	2.2K OHM, 1/6W, 5%		
R854	1412104734	RES, CARBON, AT	47K OHM, 1/6W, 5%		

VARIABLE RESISTOR

CKT NO.	P/N	DESCRIPTION	SPEC	ECO NO	DATE
NTC101	1562290024	THERMISTOR, NTC	5 OHM, 3.4A, 2.4W		
PTC101	1562190063	THERMISTOR, PTC	14 OHM, 20%, 220V		
VR101	1527290036	VAR, NO-HANDLE, CAP, V-TYPE, RT	500 OHM, B, 0.1W		
VR201	1536100036	VAR, HANDLE, PCB-MOUNT, ARRAY, H-TYPE	100K/100K/100K/100K OHM, B, 0.05W, 25F		
VR301	1536100036	VAR, HANDLE, PCB-MOUNT, ARRAY, H-TYPE	100K/100K/100K/100K OHM, B, 0.05W, 25F		
VR302	1527190036	VAR, NO-HANDLE, CAP, H-TYPE, RT	100K OHM, B, 0.1W		
VR303	1527290036	VAR, NO-HANDLE, CAP, V-TYPE, RT	500 OHM, B, 0.1W		
VR304	1536100036	VAR, HANDLE, PCB-MOUNT, ARRAY, H-TYPE	100K/100K/100K/100K OHM, B, 0.05W, 25F		
VR401	1527190063	VAR, NO-HANDLE, CAP, H-TYPE, RT	100 OHM, B, 0.1W		
VR402	1527190063	VAR, NO-HANDLE, CAP, H-TYPE, RT	100 OHM, B, 0.1W		
VR403	1527190063	VAR, NO-HANDLE, CAP, H-TYPE, RT	100 OHM, B, 0.1W		
VR404	1535300048	VAR, HANDLE, PCB-MOUNT, H-TYPE, RT	10K OHM, B, 0.05W, +/−20%, 25F		
VR501R. G. B	1527190024	VAR, NO-HANDLE, CAP, H-TYPE, RT	50K OHM, B, 0.1W		
VR801	1536100036	VAR, HANDLE, PCB-MOUNT	100K/100K/100K/100K OHM, B, 0.05W, 25F		
VR802	1527190036	VAR, NO-HANDLE, CAP, H-TYPE, RT	100K OHM, B, 0.1W		
VR803	1535300051	VAR, HANDLE, PCB-MOUNT, H-TYPE	20K OHM, B, 0.05W, +/−20%, 25F		

PCB

CKT NO.	P/N	DESCRIPTION	SPEC	ECO NO	DATE
	1611101535	PCB, MAIN/SOCKET, SC-428TX+/TXL+	245 * 330, FR- 1.6T, DS-1107A		

COIL AND TRANSFORMER

CKT NO.	P/N	DESCRIPTION	SPEC	ECO NO	DATE
	1731400063	FILTER, EMI SOCKET	250V/3A, 473PF(X1), 222PF, 1.2MH, SEV		
L101	1722400208	COIL, DEGAUSSING	115+/−1TS, 0.45, 13.70HM, 1040MM		
L102	1731300063	FILTER, CORE	2.4UH, 5.5MM, BEAD, 0.032 OHM, CGA/VII, AT		
L105	1722200298	COIL, CHOKE	50UH, 15%, ROBOT		
L106	1731300063	FILTER, CORE	2.4UH, 5.5MM, BEAD, 0.032 OHM, CGA/VII, AT		
L107	1731300063	FILTER, CORE	2.4UH, 5.5MM, BEAD, 0.032 OHM, CGA/VII, AT		
L108	1731300063	FILTER, CORE	2.4UH, 5.5MM, BEAD, 0.032 OHM, CGA/VII, AT		
L111	1731300143	FILTER, CORE	BEAD, 100 OHM, 3.6*8.1		
L301	1722600339	COIL, H-LIN, FIX	10UH, 30%, TEFLON-WIRE, NS		
L302	1721100155	COIL, MODULATION	LITZ, USTC, 177UH/185UH, SC-431VS/428V		
L401	1731300128	FILTER, CORE	BEAD, 1300HM, 3.5*8.0		
L402	1731300063	FILTER, CORE	2.4UH, 5.5MM, BEAD, 0.032 OHM, CGA/VII, AT		
L403	1731300063	FILTER, CORE	2.4UH, 5.5MM, BEAD, 0.032 OHM, CGA/VII, AT		
L404	1731300063	FILTER, CORE	2.4UH, 5.5MM, BEAD, 0.032 OHM, CGA/VII, AT		
L405	1731300063	FILTER, CORE	2.4UH, 5.5MM, BEAD, 0.032 OHM, CGA/VII, AT		
L501R, G, B	1722100087	COIL, PEAKING	0.82UH, +−25%, SC-726V		
LF102	1731100298	FILTER, LINE	20MH, SC-726V		
T101	1711600458	TRANS, POWER SWITCHINNG	SC-428TX+/TXL+, 115/230V		
T301	1713200155	COIL, TRANS, H-DRIVE	10MH/70UH, 15%, SC-431VII		
T302	1712290247	FBT, COLOR	Y262642, CF0651, 48KHZ		

OTHER ELECTRICITY

CKT NO.	P/N	DESCRIPTION	SPEC	ECO NO	DATE
F101	1910490012	FUSE TIME-LAG WITHOUT LEAD	3.15A, 250V, 5*20MM, CERAMIC		
FC101	1911300087	FUSE CLIP	5.20*20MM, TAPPING		
FC102	1911300087	FUSE CLIP	5.20*20MM, TAPPING		
SG502	1916100036	NEON LAMP	200VDC		
SW 2	1913100167	PUSH SWITCH	SP, 30V, 0.2A, SPPJ312		
SW101	1913190155	PUSH SWITCH	SPST, 5A/80A, 250VAC, TV-5		

TRANASISTOR

CKT NO.	P/N	DESCRIPTION	SPEC	ECO NO	DATE
Q101	2111400036	TR NPN TO-92	KSC1008Y, 0.7A, 80V, 800MA, LF AMP		
Q102	2111400036	TR NPN TO-92	KSC1008Y, 0.7A, 80V, 800MA, LF AMP		
Q103	2111790116	TR NPN TO-220	MJE3055T, 10A, 70V, 75W(TC), PW SW		
Q104	2111790116	TR NPN TO-220	MJE3055T, 10A, 70V, 75W(TC), PW SW		
Q105	2112400024	TR PNP TO-92	KSA733CY, 0.15A, 60V, 0.25W, LF AMP		
Q106	2112400024	TR PNP TO-92	KSA733CY, 0.15A, 60V, 0.25W, LF AMP		
Q107	2112400024	TR PNP TO-92	KSA733CY, 0.15A, 60V, 0.25W, LF AMP		
Q114	2113190131	FET N-CHANNEL	BUZ71, 12A, 50V, 40W(TC), HP SW, TO-220		
Q115	2111400012	TR NPN TO-92	KSC945CY, 150MA, 60V, 250MV, AF AMP/OSC		
Q116	2111400315	TR NPN TO-92	2N5551C-Y, 0.6A, 160V, 625MW		
Q117	2111400012	TR NPN TO-92	KSC945CY, 150MA, 60V, 250MV, AF AMP/OSC		
Q118	2112400024	TR PNP TO-92	KSA733CY, 0.15A, 60V, 0.25W, LF AMP		
Q130	2111400012	TR NPN TO-92	KSC945CY, 150MA, 60V, 250MV, AF AMP/OSC		
Q132	2111400327	TR NPN TO-92	C2316Y, 0.8A, 120V, 900MW		
Q150	2111790116	TR NPN TO-220	MJE3055T, 10A, 70V, 75W(TC), PW SW		
Q305	2111400116	TR NPN TO-92	KSC2331, 700MA, 80V, 1.0W, LF AMP		
Q306	2111790342	TR NPN TO-3P	C4762, 7A, 1500V, 50W(TC), HOR DEF		
Q307	2111400012	TR NPN TO-92	KSC945CY, 150MA, 60V, 250MV, AF, AMP/OSC		
Q308	2112400024	TR PNP TO-92	KSA733CY, 0.15A, 60V, 0.25W, LF AMP		
Q501R, G, B	2111590099	TR NPN TO-126	2SC3953D, 0.2A, 120V, 1.3W, VD O/P, ML		
Q502R, G, B	2111400063	TR NPN TO-92	PN2222A, 0.8, 75V, 500MW, GP		
Q503R, G, B	2111590099	TR PNP TO-92	2SC3953D, 0.2A, 120V, 1.3W, VD O/P, ML		
Q504R, G, B	2112590048	TR NPN TO-126	2SA1538E, 0.2A, 120V, 1.3W, VD O/P, ML		
Q601	2111400012	TR NPN TO-92	KSC945CY, 150MA, 60V, 250MV, AF AMP/OSC		
Q801	2112400024	TR PNP TO-92	KSA733CY, 0.15A, 60V, 0.25W, LF AMP		
Q802	2112400024	TR PNP TO-92	KSA733CY, 0.15A, 60V, 0.25W, LF AMP		
Q803	2111500131	TR NPN TO-126	KSE800, 4A, 60V, 40W		
Q804	2111400036	TR NPN TO-92	KSC1008Y, 0.7A, 80V, 800MA, LF AMP		
Q805	2111400116	TR NPN TO-92	KSC2331, 700MA, 80V, 1.0W, LF AMP		
Q807	2111400012	TR NPN TO-92	KSC945CY, 150MA, 60V, 250MV, AF AMP/OSC		
Q808	2112400143	TR PNP TO-92	2N6520, 0.5A, 350V, 0.625W, HV, TAPING		
Q809	2111400012	TR NPN TO-92	KSC945CY, 150MA, 60V, 250MV, AF AMP/OSC		
Q810	2112400024	TR PNP TO-92	KSA733CY, 0.15A, 60V, 0.25W, LF AMP		
Q812	2111400315	TR NPN TO-92	2N5551-Y, 0.6A, 160V, 625MW		
Q813	2113190179	FET N-CHANNEL	2SK890, 10A, 200V, 75W(TC), TO-220		
Q814	2111400012	TR NPN TO-92	KSC945CY, 150MA, 60V, 250MV, AF AMP/OSC		

DIODE

CKT NO.	P/N	DESCRIPTION	SPEC	ECO NO	DATE
D101	2211390051	RECTIFIER DIODE BR	GBU4J, 4A, 600V, LEAD CUTTING		
D102	2211190012	RECTIFIER DIODE FR	1A, 1000V, MR818/GI818		
D103	2211100087	RECTIFIER DIODE FR	1A, 600V, IN4937		
D104	2211100087	RECTIFIER DIODE FR	1A, 600V, IN4937		
D105	2211100087	RECTIFIER DIODE FR	1A, 600V, IN4937		
D106	2211100087	RECTIFIER DIODE FR	1A, 600V, IN4937		
D107	2211190167	RECTIFIER DIODE FR	1.5A, 400V, RGP15G/FF1504		
D108	2211190167	RECTIFIER DIODE FR	1.5A, 400V, RGP15G/FF1504		
D109	2211190461	RECTIFIER DIODE FR	1.5A, 600V, 250NS, RGP15J		
D110	2211190419	RECTIFIER DIODE FR	3A, 800V, 75NS, UF5407		
D111	2211190167	RECTIFIER DIODE FR	1.5A, 400V, RGP15G/FF1504		
D112	2211190458	RECTIFIER DIODE FR	3A, 400V, 50NS, UF5404		
D114	2211190458	RECTIFIER DIODE FR	3A, 400V, 50NS, UF5404		
D115	2215290099	LED, GREEN	TLG223, 25MA, 70MW, TAPING		
D117	2212100116	ZENER DIODE	0.5W, 12V, UZ12B		
D120	2213200048	SWITCHING DIODE	1N4148, 150MA, 75V		
D121	2213200048	SWITCHING DIODE	1N4148, 150MA, 75V		
D122	2213200048	SWITCHING DIODE	1N4148, 150MA, 75V		
D150	2211190419	RECTIFIER DIODE FR	3A, 800V, 75NS, UF5407		
D160	2213200048	SWITCHING DIODE	1N4148, 150MA, 75V		
D161	2212100104	ZENER DIODE	0.5W, 11V, UZ11B		
D201	2213200048	SWITCHING DIODE	1N4148, 150MA, 75V		
D202	2213200048	SWITCHING DIODE	1N4148, 150MA, 75V		
D312	2211190526	RECTIFIER DIODE FR	RU4DS, 2.5A, 1300V		
D313	2211190458	RECTIFIER DIODE FR	3A, 500V, 50NS, UF5404		
D315	2212100366	ZENER DIODE	0.5W, 10V, MTZ 10C		
D316	2213200048	SWITCHING DIODE	1N4148, 150MA, 75V		
D317	2213200048	SWITCHING DIODE	1N4148, 150MA, 75V		
D401	2213200048	SWITCHING DIODE	1N4148, 150MA, 75V		
D402	2213200048	SWITCHING DIODE	1N4148, 150MA, 75V		
D403	2213200048	SWITCHING DIODE	1N4148, 150MA, 75V		
D404	2213200048	SWITCHING DIODE	1N4148, 150MA, 75V		
D405	2213200048	SWITCHING DIODE	1N4148, 150MA, 75V		
D406	2213200048	SWITCHING DIODE	1N4148, 150MA, 75V		
D407	2213200048	SWITCHING DIODE	1N4148, 150MA, 75V		
D408	2213200048	SWITCHING DIODE	1N4148, 150MA, 75V		

DIODE

CKT NO.	P/N	DESCRIPTION	SPEC	ECO NO	DATE
D501R, G, B	2213200048	SWITCHING DIODE	1N4148, 150MA, 75V		
D502R, G, B	2213200048	SWITCHING DIODE	1N4148, 150MA, 75V		
D504R, G, B	2212100366	ZENER DIODE	0.5W, 10V, MTZ 10C		
D506R, G, B	2211190087	RECTIFIER DIODE FR	1A, 600V, 1N4937		
D507R, G, B	2212100167	ZENER DIODE	0.5W, 24V, UZ24B		
D508	2211190087	RECTIFIER DIODE FR	1A, 600V, 1N4937		
D600	2213200048	SWITCHING DIODE	1N4148, 150MA, 75V		
D601	2213200048	SWITCHING DIODE	1N4148, 150MA, 75V		
D602	2213200048	SWITCHING DIODE	1N4148, 150MA, 75V		
D603	2213200048	SWITCHING DIODE	1N4148, 150MA, 75V		
D800	2213200048	SWITCHING DIODE	1N4148, 150MA, 75V		
D801	2211190087	RECTIFIER DIODE FR	1A, 600V, 1N4937		
D802	2213200048	SWITCHING DIODE	1N4148, 150MA, 75V		
D803	2212100036	ZENER DIODE	0.5W, 3.3V, UZ3.3B		
D804	2211190087	RECTIFIER DIODE FR	1A, 600V, 1N4937		
D805	2211190087	RECTIFIER DIODE FR	1A, 600V, 1N4937		
D806	2213200048	SWITCHING DIODE	1N4148, 150MA, 75V		
D808	2212100366	ZENER DIODE	0.5W, 10V, MTZ 10C		
D809	2213200048	SWITCHING DIODE	1N4148, 150MA, 75V		
D810	2213200048	SWITCHING DIODE	1N4148, 150MA, 75V		
D811	2212100366	ZENER DIODE	0.5W, 10V, MTZ 10C		
ZD118	2212100259	ZENER DIODE	1.0W, 5.1V, UZP5.1B		
ZD119	2212100036	ZENER DIODE	0.5W, 3.3V, UZ3.3B		
ZD601	2212100366	ZENER DIODE	0.5W, 10V, MTZ 10C		
ZD801	2212100051	ZENER DIODE	0.5W, 5.1V, UZ5.1B		

IC

CKT NO.	P/N	DESCRIPTION	SPEC	ECO NO	DATE
IC101	2332200104	IC, LINERAR, SIP-5	STR58041		
IC102	2331200116	IC, REGULATOR, TO-220	317, 1.5A		
IC103	2331200128	IC, REGULATOR, TO-220	7805C, 1.5A, 5V		
IC104	2330190048	IC, OPTO-COUPLER, DIP	4N35(SOC815A), WITH VDE, 6P		
IC201	2332190339	IC, LINEAR, SIP-9	TDA8351, VERTICAL DEFLECTION		
IC301	2332190342	IC, LINEAR, DIP-20	TDA4852, HV DEFLETION CONTROLLER		
IC401	2332190208	IC, LINEAR, DIP	1203, RGB VIDEO AMP, 28		
IC601	2341190354	IC, MROM DIP-24	87C751, SC-428TX+		
IC602	2312100868	IC, TTL, LS, DIP	74LS86		
IC603	2332190327	IC, LINEAR, DIP-16	6 VIT DAC, TDA8444		
IC604	2332300048	IC, LINEAR, TO-92	KIA7042P, VOLTAGE DEFECTOR		

METAL

CKT NO.	P/N	DESCRIPTION	SPEC	ECO NO	DATE
	3111400167	HEAT SINK-N, TERMINAL	22*5.2*32, CU, ZPW		
	3111400618	HEAT SINK-N	30*15*23.5, A6063S		
	3111400621	HEAT SINK-N	23.5*15*15, A6063S		
	3112900577	SHIELD COVER, VIDEO, 471P/472P	88*8*83.6*0.3T		
	3112900592	SHIELD COVER, SOCKET, 470P/470AP	86*51*35*0.3 TIN		
	3121102202	MET-I, PRS, BACK CHASSIS, SC-428DX/VS+	138*51.5*14, SECC-P 1T		
	3121102369	MET-I, PRS, PCB BRKT(R)	184*13.6*12, SECC-9-30/30 1T		
	3121102372	MET-I, PRS, PCB BRKT(L)	184*13.6*12, SECC-9-30/30 1T		
CN101	3113100012	BEAD PIN	D2.36*14.1, BRASS, SN		
CN102	3113100012	BEAD PIN	D2.36*14.1, BRASS, SN		
CN301	3113100012	BEAD PIN	D2.36*14.1, BRASS, SN		
CN503	3113100012	BEAD PIN	D2.36*14.1, BRASS, SN		

PLASTIC

CKT NO.	P/N	DESCRIPTION	SPEC	ECO NO	DATE
	3211103143	PLA EXT-H, REAR, SC-428TX+/TXL+	348.4*315.1*1*257, OEM-3357		
	3231100012	CAVLE TIE	L101.6*W25*T1		
	3261104069	PLA, V/R KNOB, SC-428VS(L)+/DX(L)	D22*15, ABS, OEM-3357		
	3261104072	PLA, V/R KNOB, SC-428VS(L)+	D28*15, ABS, OEM-3357		
	3261105401	PLA, PCB GUIDE-B, 471P/482P	154.5*28.4*17.5, OEM-2205		

CONNECTION PARTS

CKT NO.	P/N	DESCRIPTION	SPEC	ECO NO	DATE
	3314200012	MS+, PAN, W/P.W, ZPW	M3*8, SWRCH1018AK		
	3314200024	MS+, PAN, W/P.W, ZPW	M3*10, SWRCH1018AK		
	3314200036	MS+, PAN, W/P.W, ZPW	M3*12, SWRCH1018AK		
	3316800024	MS+, BND, W/T.L.W, ZPW	M4*8, SWRCH1018AK		
	3342500012	TS+, BND, W/P.W, B, ZPW	M3*8, SWRCH1018AK		
	3348500012	TS+, OVAL, 2, ZPW	M3*12, SWRCH1018AK		
	3361200259	PS+, PAN, ZPW	M4.5*14, SWRCH1018AK		
	3361400012	PS+, PAN, W/F, ZPW(WHR-9), 471P/472P	M4*12(SWRCH1018AK)		
	3364200036	PS+, HEX, W/S.W, ZPW	M4.5*24, WD19, SWRCH1018AK		
	3385200012	NUT, HEX, 2, ZPW	M3*0.5P, S10C		

PACIKING

CKT NO.	P/N	DESCRIPTION	SPEC	ECO NO	DATE
	3411103589	BOX, (SAMTRON), SC-428TX+	441*415*443(SUK300*K200*SUK300)		
	3411103592	BOX, (SAMTRON), SC-428TXL+	441*415*443(SUK300*K200*SUK300)		
	3421100589	S/FOAM, SC-428VS+(E)	430*420*108, EPS		
	3431100577	VINYL BAG, SET, SAMTRON	800*880, HDPE, 0.015T, RECYCLING		
	3431100592	VINYL BAG, SIGNAL CABLE, SAMTRON	110*200, HDPE 0.05T, RECYCLING		

PRINT

CKT NO.	P/N	DESCRIPTION	SPEC	ECO NO	DATE
	3511105081	LABEL, WARNING, SC-431EII/VII	HIGH VOLTAGE		
	3511108015	LABEL, BOX, SC-4＊＊, DOUBLE BACKING	105＊110, ART PAPER		
	3511109128	LABEL, PRODUCT, SC-428TX+	109.8＊59.8, UL/CSA/TUV/GS, OEM-3357		
	3511109131	LABEL, PRODUCT, SC-428TXL+	109.8＊59.8, UL/CSA/TUV/GS, OEM-3357		
	3511109446	LABEL, DPMS(SAMTRON), SC-428VSL+(E), ETC.	80＊30＊0.038T		
	3511109924	LABEL BAR CODE	75＊35		
	3511110062	LABEL UPC CODE(SDI) ALL	50＊25		

WIRE, CONNECTOR

CKT NO.	P/N	DESCRIPTION	SPEC	ECO NO	DATE
	3641400461	WIRE, CONN/HOUSING	325MM, 3P(2P), OP14A, TWIST, 1672#22		
	3643100208	WIRE, RING TER, SINGLE	G/Y, D5.3, 150MM		
	3643700194	BRAID WIRE, RING, W/TUBE	D5＊120MM		
	365210021B	CORD, POWER, NORMAL, DETACH	SVT, 125V/7A, BK, 6FT, SHIELDED, T MARK		
	365219004B	CORD, POWER, NORMAL, DETACH	H05VV-F, 250V, BK 1830MM, T MARK		
	3654100701	CABLE, SIGNAL, NON-DET	15P, 1705(1500MM), SC-428UX(L), BK, MOLD		
CN401	366150007B	CONNECTOR SHROUDED HEADER	2.5, ST, 11P, 35301-1150-7		
CN501	3641301006	WIRE, CONN/HOUSING	280MM, 7P, W, 2.5, UL1365#30,2＊CORE		
CN502	3641300975	WIRE, CONN/HOUSING	270MM, 4P, BK, R, NC, Y, UL1007#22		
CN503	3643700502	BRAID WIRE, CDT GND, 470(A)P	660/333/255MM, 2P, 1P, 16＊3＊0.16, 2 ＊D4.3		
CN505	3663300131	CRT SOCKET	D29, 12P, ISH-19S, SOLDERLESS		
GND1	3643100446	WIRE, RING TER, SINGLE	BK, D4.3, 160MM, 1672#WW, PIN		
J1-J24	3618100012	WIRE, BARE	CU+SN+PB, 1ST, 1X0.6, SAD		
J26-110	3618100012	WIRE, BARE	CU+SN+PB, 1ST, 1X0.6, SAD		

OTHER METAL

CKT NO.	P/N	DESCRIPTION	SPEC	ECO NO	DATE
	3941100143	FOIL SHEET, ZIRCON-II	85 * 100, PEST 0.3T		
	3941100194	FOLI SHEET, SIENNA	85 * 55MM, PEST 0.32T		
	3942200024	TUBE-SHRINK, WHT	D4, POLY-OLEFIN		

[2] Reliabilities

2-1. Life test. (MTBF)

The monitor shall have 20,000hrs MTBF when operated under any combination of conditions as detailed specification.

2-2. Environmental Test.

The monitor unit must not be degradiated and damaged by operating over the specified range and will meet specifications when returned to the operating environment.

SED will perform these tests on the monitor prior to its release.

The monitor is required to pass these tests before mass production.

These tests are detailed in SED environment specification.

2-3. Temperature Test.

* Operting : 0℃ To 45℃
* Storage : −40℃ To +70℃

2-4. Humidity Test.

* Operting : 15% To 80%(Non condensing)
* Storage : Maximum 90%

2-5. Altitude.

* Operating : 15000 ft at +70℃
  0 ft at 0℃
* Non operating : MAX. 50000 ft

2-6. Safety and approvals.

2-6-1. Electromagnetic ieterfernce.

The system will be certified according to the following international radiation standars.

* FCC 47 CFR Ch 15, SUB. J
* BZT DIN VDE 0871/BMPT-Vfg. 243/1991 (WITH Vfg 046/1992)
* DOC SOR/88-475
* NEMKO CISPR22/EN55022
* SETI CISPR22/EN55022
* D.O.T BY KOREAN LAWS. 100
* VCCT CLASS "2"(CISPR 22)

2-6-2. Safety approval.

The system will be certified according to the following international safety standards.

* UL 1950 WITH D3
* CSA C22.2 No.950 WITH D3
* TUV-EN60950

2-6-3. Ergonomics.

The complete assembly shall be certified as complying with the follwing international standards.

* TUV/ GS : ZH 1/618/10.80
* TUV/ERGONOMIE : ISO 924/PART 3

[3] Signal cable pin connection

*SIGNAL CABLE PIN CONNECTION(15PIN D-SUB MINIATURE SIGNAL CONNECTOR WITH CABLE)

NO	RGB/ANALOG SIGNAL	SIGNAL PIN NO.	WIRE COLOR	REMARKS
1	RED	PIN #1	RED	
2	GREEN	PIN #2	GREEN	
3	BLUE	PIN #3	BLUE	
4	GND	PIN #4	BLACK	
5	GND	PIN #5	BLACK	
6	RED GROUND	PIN #6	BLACK	SHIELDED
7	GREEN GROUND	PIN #7	BLACK	SHIELDED
8	BLUE GROUND	PIN #8	BLACK	SHIELDED
9	N.C	PIN #9		
10	GND	PIN #10	BLACK	
11	SYNC GND	PIN #11	BLACK	
12	N.C	PIN #12		
13	H-SYNC	PIN #13	WHITE	
14	V-SYNC	PIN #14	YELLOW	
15	N.C	PIN #15	BLACK	

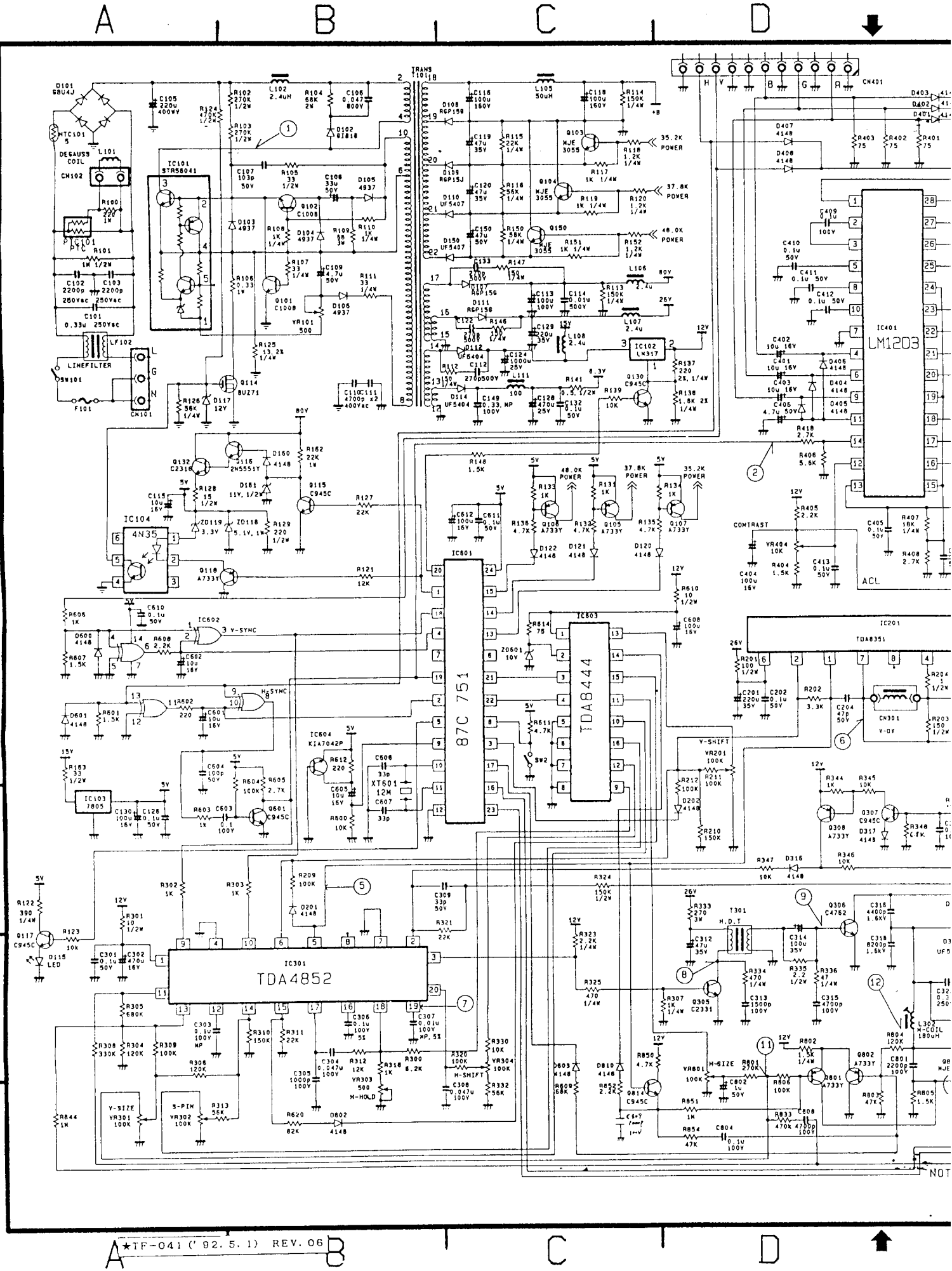
IC101 STR58041
IC401 LM1203
IC601 87C 751
IC603 TDA8444
IC301 TDA4852
IC201 TDA8351
IC102 LM317
IC104 4N35
IC103 7805
IC602
IC604 KIA7042P
CN401
CN101
CN102
CN301
TRANS T101
LINEFILTER
DEGAUSS COIL
V-SYNC
H-SYNC
V-SHIFT
H-SIZE
H-SHIFT
V-SIZE
S-PIN
H-HOLD
H-COIL
COMTRAST
ACL
POWER
35.2K POWER
37.8K POWER
48.0K POWER
XT601 12M
T301 H.D.T
LED

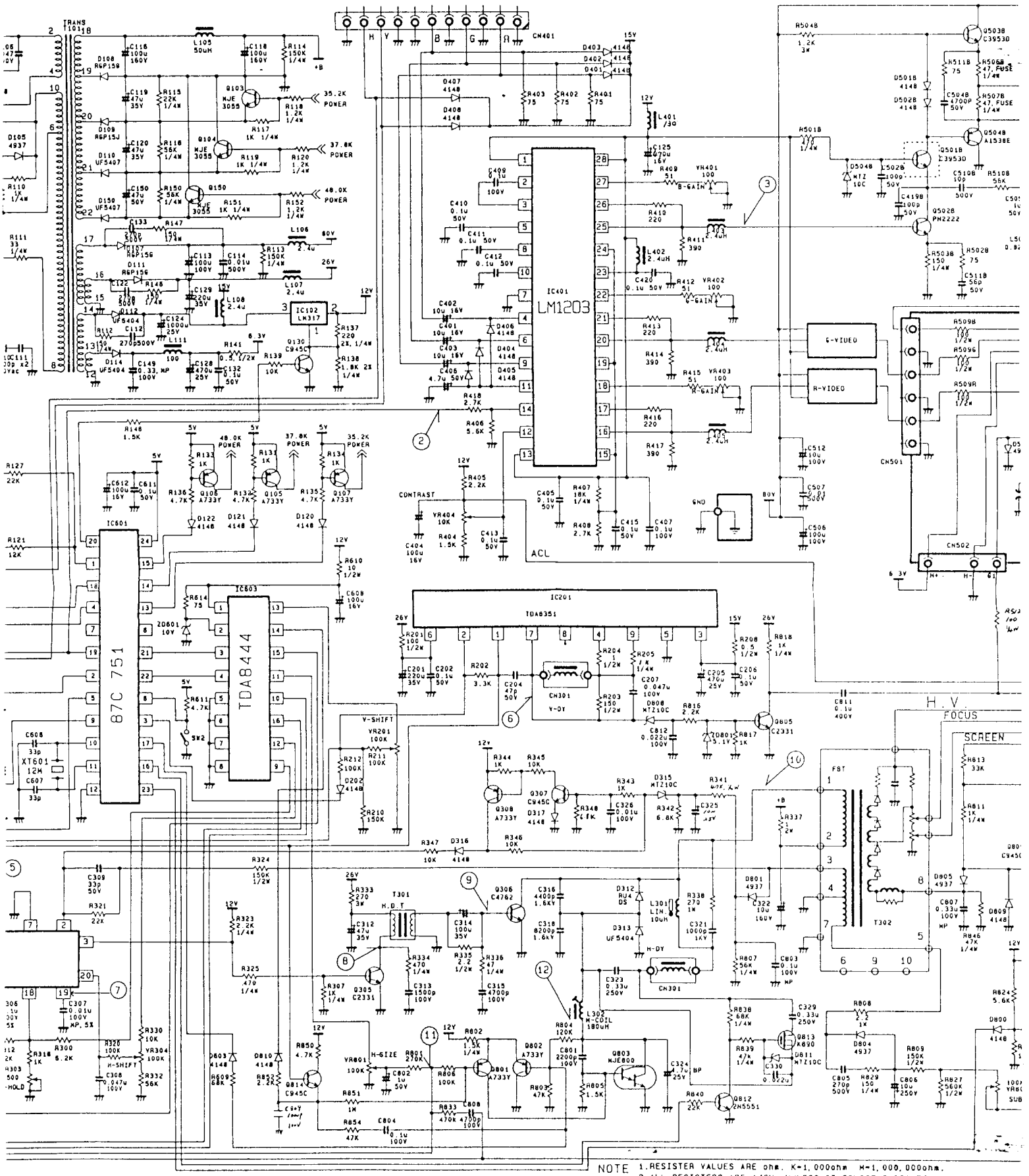

DOCUMENT NO : 13-6-10020SI

CONFIDENTIAL

REV.	DATE	DESCRIPTION	DESIGNED	APPROVED
A	[illegible]	Initial release	[illegible]	[illegible]
B	[illegible]	[illegible]	[illegible]	[illegible]
C	[illegible]	[illegible]	[illegible]	[illegible]

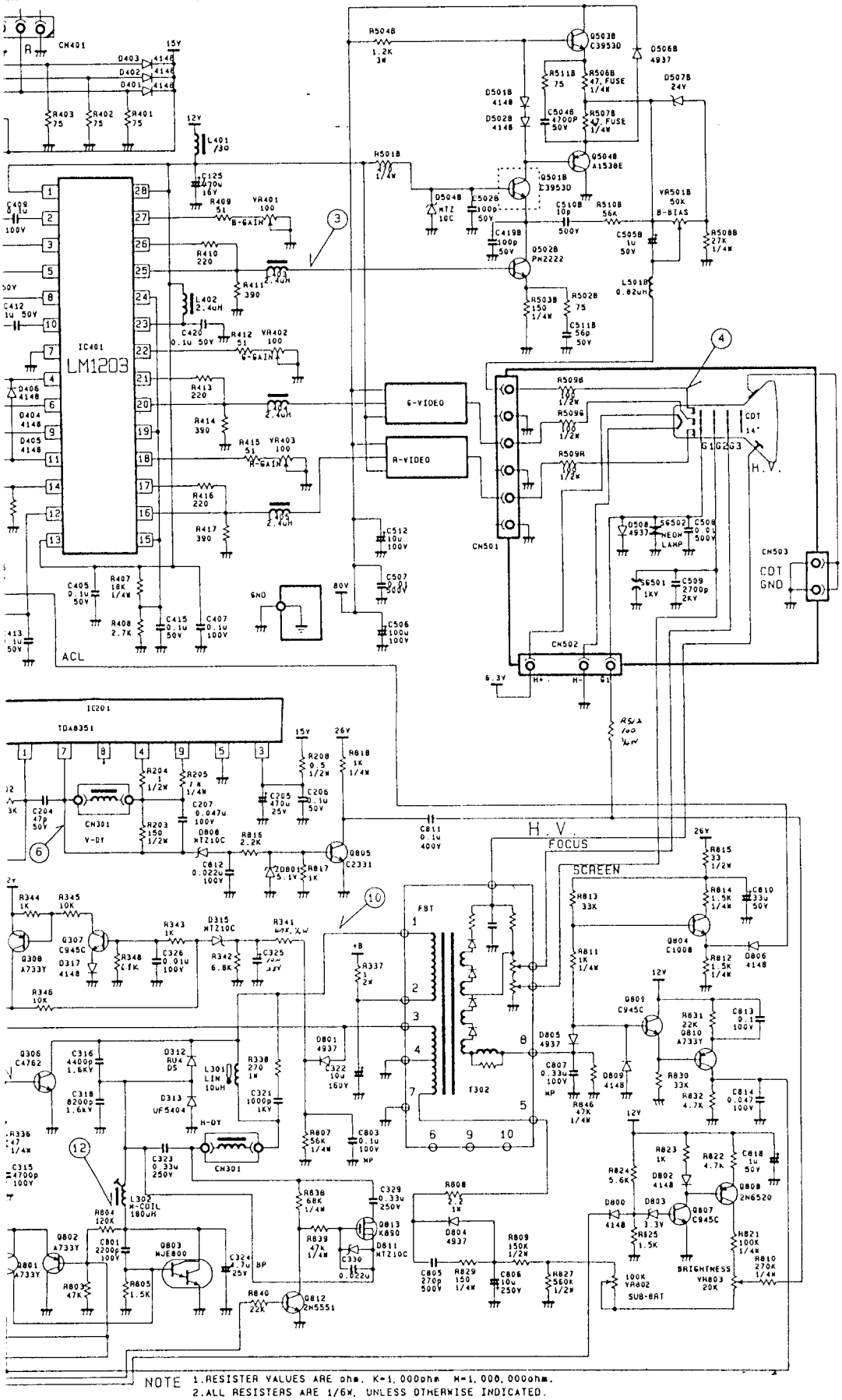

VOLTAGE & WAVEFORMS

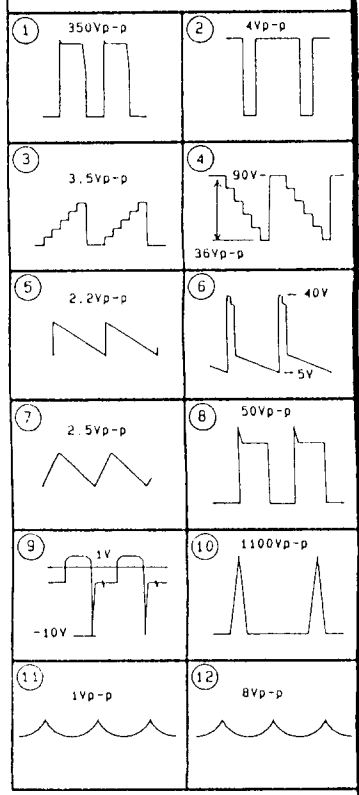

NOTE
1. RESISTER VALUES ARE ohm. K=1,000ohm M=1,000,000ohm.
2. ALL RESISTERS ARE 1/6W, UNLESS OTHERWISE INDICATED.
3. CAPACITOR VALUES ARE FARAD(F). u=1/1,000,000F p=1/1,000,000u.
4. DIODE NAME : 4148=1N4148, 4937=1N4937

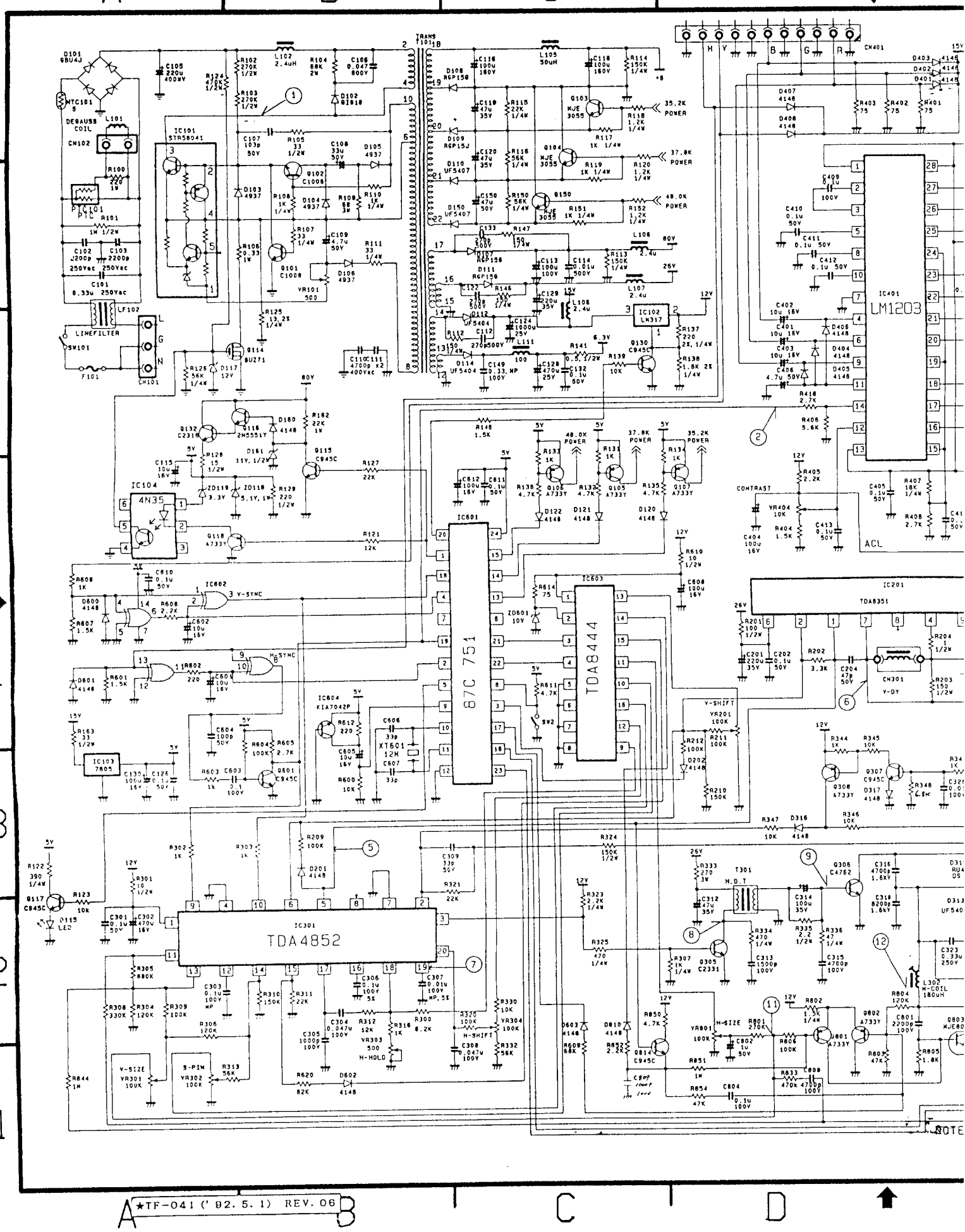
IC101
STR58041
IC401
LM1203
IC601
87C 751
IC602
IC603
TDA8444
IC201
TDA8351
IC301
TDA4852
IC104
4N35
IC102
LM317
IC103
7805
IC604
KIA7042P
XT601
12M
TRANS
T101
CN401
CN101
CN102
CN301
LINEFILTER
DEGAUSS
COIL
PTC101
PTC
LF102
F101
SW101
35.2K
POWER
37.8K
POWER
48.0K
POWER
CONTRAST
ACL
Y-SHIFT
H-SIZE
H-SHIFT
H-HOLD
V-SIZE
S-PIN
V-SYNC
H-SYNC
Y-DY
H-COIL
180UH
T301
H.D.T
LED
NOTE

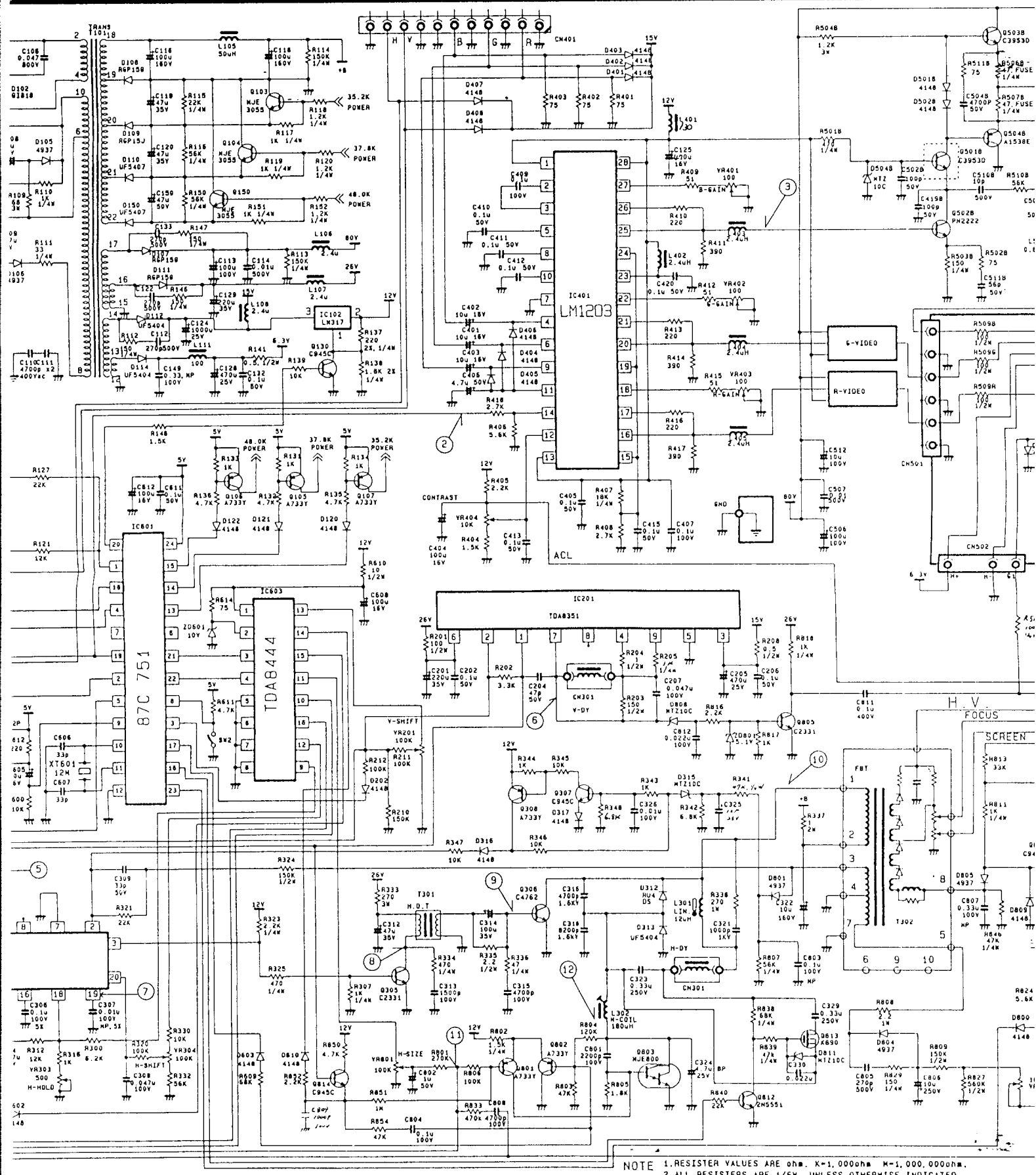

NOTE
1. RESISTER VALUES ARE ohm. K=1,000ohm M=1,000,000ohm.
2. ALL RESISTERS ARE 1/6W, UNLESS OTHERWISE INDICATED.
3. CAPACITOR VALUES ARE FARAD(F). u=1/1,000,000F p=1/1,000,000u.
4. DIODE NAME : 4148=1N4148, 4937=1N4937

DOCUMENT NO : 13-6-1002

CONFIDENTIAL

REV.	DATE	DESCRIPTION	DESIGNED	APPROVED
A	7.5	[illegible]	[illegible]	[illegible]
B	4.8	[illegible]	[illegible]	[illegible]
C	4.15	[illegible]	[illegible]	[illegible]

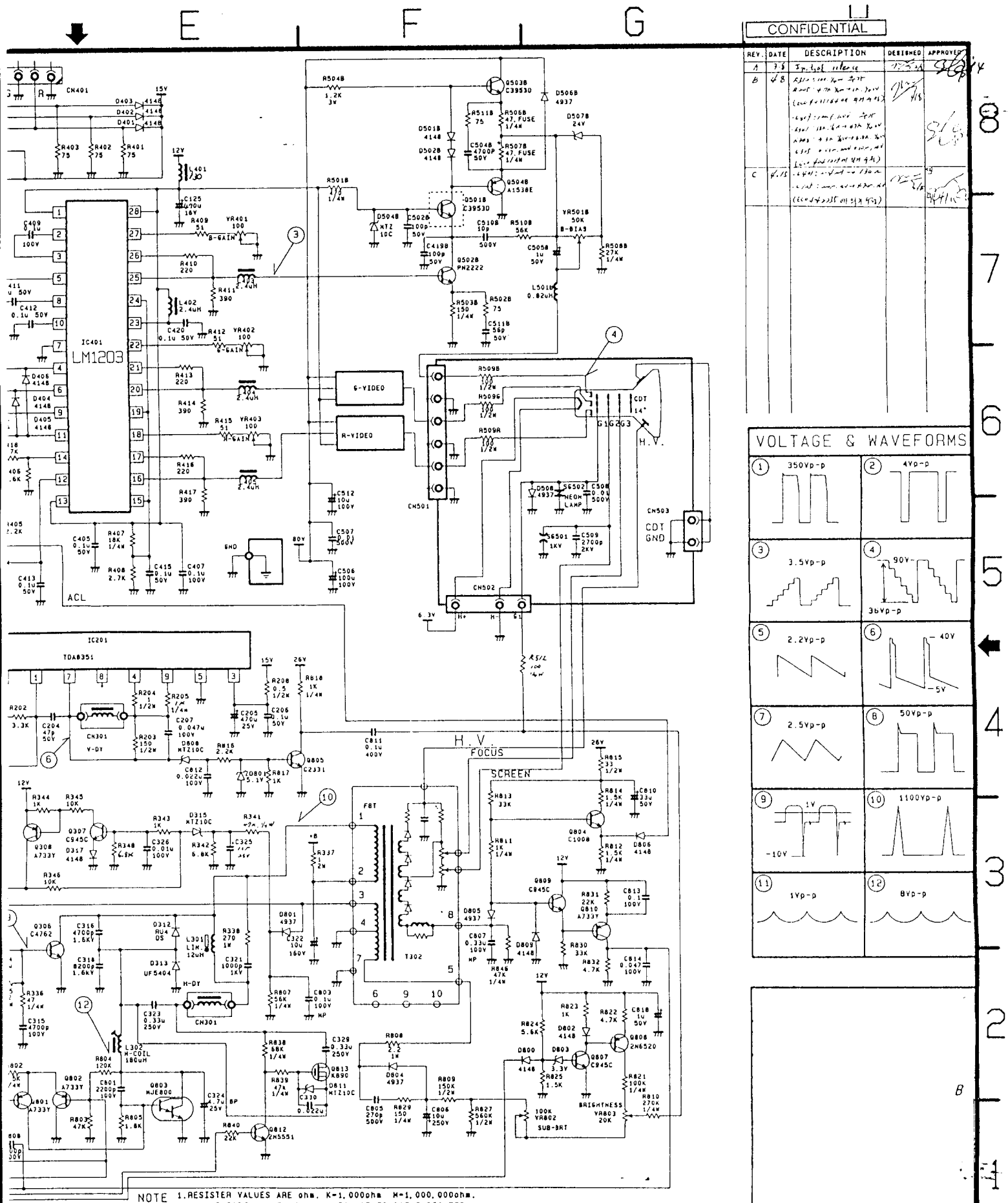

NOTE
1. RESISTER VALUES ARE ohm. K=1,000ohm M=1,000,000ohm.
2. ALL RESISTERS ARE 1/6W. UNLESS OTHERWISE INDICATED.
3. CAPACITOR VALUES ARE FARAD(F). u=1/1,000,000F p=1/1,000,000u.
4. DIODE NAME : 4148=1N4148, 4937=1N4937

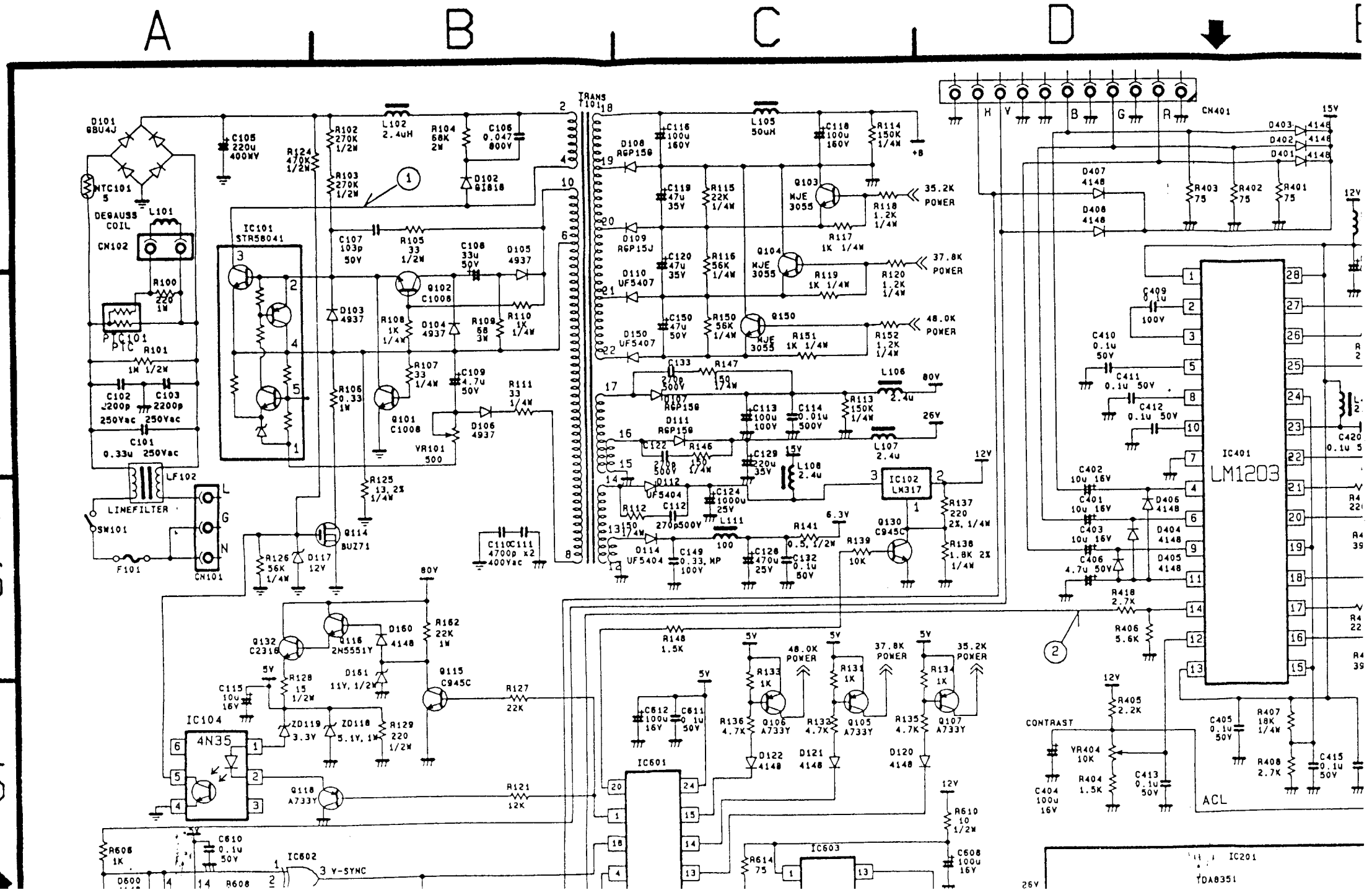
A
B
C
D
D101 GBU4J
NTC101 5
DEGAUSS COIL
L101
CN102
R100 220 1W
PTC101 PTC
R101 1W 1/2W
C102 2200p 250Vac
C103 2200p 250Vac
C101 0.33u 250Vac
LF102
LINEFILTER
SW101
F101
CN101
C105 220u 400WV
R124 470K 1/2W
R102 270K 1/2W
R103 270K 1/2W
L102 2.4uH
R104 68K 2W
C106 0.047 800V
D102 GI818
IC101 STR58041
C107 103p 50V
R105 33 1/2W
C108 33u 50V
D105 4937
Q102 C1008
D103 4937
R108 1K 1/4W
D104 4937
R109 68 3W
R110 1K 1/4W
R107 33 1/4W
C109 4.7u 50V
R111 33 1/4W
Q101 C1008
D106 4937
VR101 500
R106 0.33 1W
R125 13.2K 1/4W
R126 56K 1/4W
D117 12V
Q114 BUZ71
C110 C111 4700p x2 400Vac
TRANS T101
D108 RGP15G
C116 100u 160V
L105 50uH
C118 100u 160V
R114 150K 1/4W
+B
D109 RGP15J
C119 47u 35V
R115 22K 1/4W
Q103 MJE 3055
35.2K POWER
R118 1.2K 1/4W
R117 1K 1/4W
D110 UF5407
C120 47u 35V
R116 56K 1/4W
Q104 MJE 3055
37.8K POWER
R119 1K 1/4W
R120 1.2K 1/4W
D150 UF5407
C150 47u 50V
R150 56K 1/4W
Q150 MJE 3055
48.0K POWER
R151 1K 1/4W
R152 1.2K 1/4W
C133 2200 500V
R147 150 1/4W
D107 RGP15G
D111 RGP15G
C113 100u 100V
C114 0.01u 500V
R113 150K 1/4W
L106 2.4u
80V
26V
L107 2.4u
C122 2200 500V
R146 150 1/4W
C129 220u 35V
L108 2.4u
15V
IC102 LM317
12V
D112 UF5404
C124 1000u 25V
R112 150 1/4W
C112 2700 500V
L111 100
R141 0.5, 1/2W
6.3V
Q130 C945C
R137 220 2%, 1/4W
R138 1.8K 2% 1/4W
R139 10K
D114 UF5404
C149 0.33, MP 100V
C126 470u 25V
C132 0.1u 50V
CN401
H V B G R
D403 4148
D402 4148
D401 4148
D407 4148
D408 4148
R403 75
R402 75
R401 75
IC401 LM1203
C409 0.1u 100V
C410 0.1u 50V
C411 0.1u 50V
C412 0.1u 50V
C402 10u 16V
C401 10u 16V
C403 10u 16V
C406 4.7u 50V
D406 4148
D404 4148
D405 4148
R418 2.7K
R406 5.6K
R405 2.2K
CONTRAST
YR404 10K
R404 1.5K
C413 0.1u 50V
C404 100u 16V
C405 0.1u 50V
R407 18K 1/4W
R408 2.7K
C415 0.1u 50V
ACL
Q132 C2316
Q116 2N5551Y
D160 4148
R162 22K 1W
D161 11V, 1/2W
Q115 C945C
R127 22K
C115 10u 16V
R128 15 1/2W
ZD119 3.3V
ZD118 5.1V, 1W
R129 220 1/2W
IC104 4N35
Q118 A733Y
R121 12K
R148 1.5K
C612 100u 16V
C611 0.1u 50V
IC601
R133 1K
R131 1K
R134 1K
48.0K POWER
37.8K POWER
35.2K POWER
R136 4.7K
Q106 A733Y
R132 4.7K
Q105 A733Y
R135 4.7K
Q107 A733Y
D122 4148
D121 4148
D120 4148
R610 10 1/2W
C608 100u 16V
IC603
R614 75
R608 1K
C610 0.1u 50V
IC602
3 V-SYNC
D500
IC201
TDA8351
26V

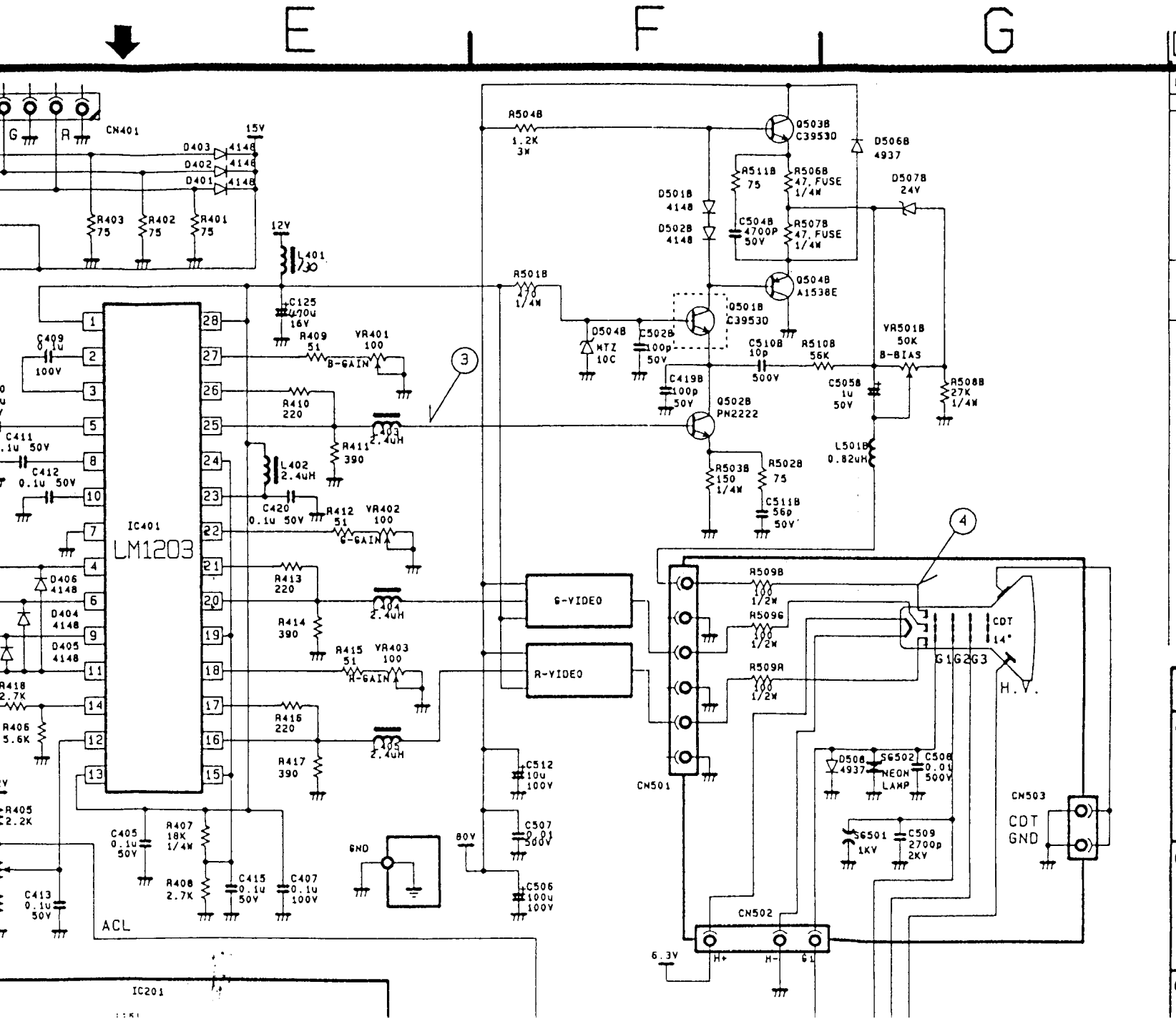

CONFIDENTIAL

REV.	DATE	DESCRIPTION	DESIGNED	APPROVED
A	7.8	Initial release		
B	4.8	R512 : 100, ½W → 47Ω R505 : 4.7K ½W → 1K, ½W (ECO #031184 of 4/4/93) C507 : 1mF, 100V → 0.01 R501 : 470, ¼W → 470, ½W R508 : 4.7K, ½W → 6.8K, ½W C505 : 0.01, 100V → 1u, 50V (ECO #031317 of 4/4/93)		
C	4.15	L401 : 2.4uH → 130uH C125 : 2mm, 4V → 470u, 4V (ECO #033135 of 9/8/93)		

VOLTAGE & WAVEFORMS

1. 350Vp-p
2. 4Vp-p
3. 3.5Vp-p
4. 90V- 36Vp-p
5. 2.2Vp-p
6. 40V

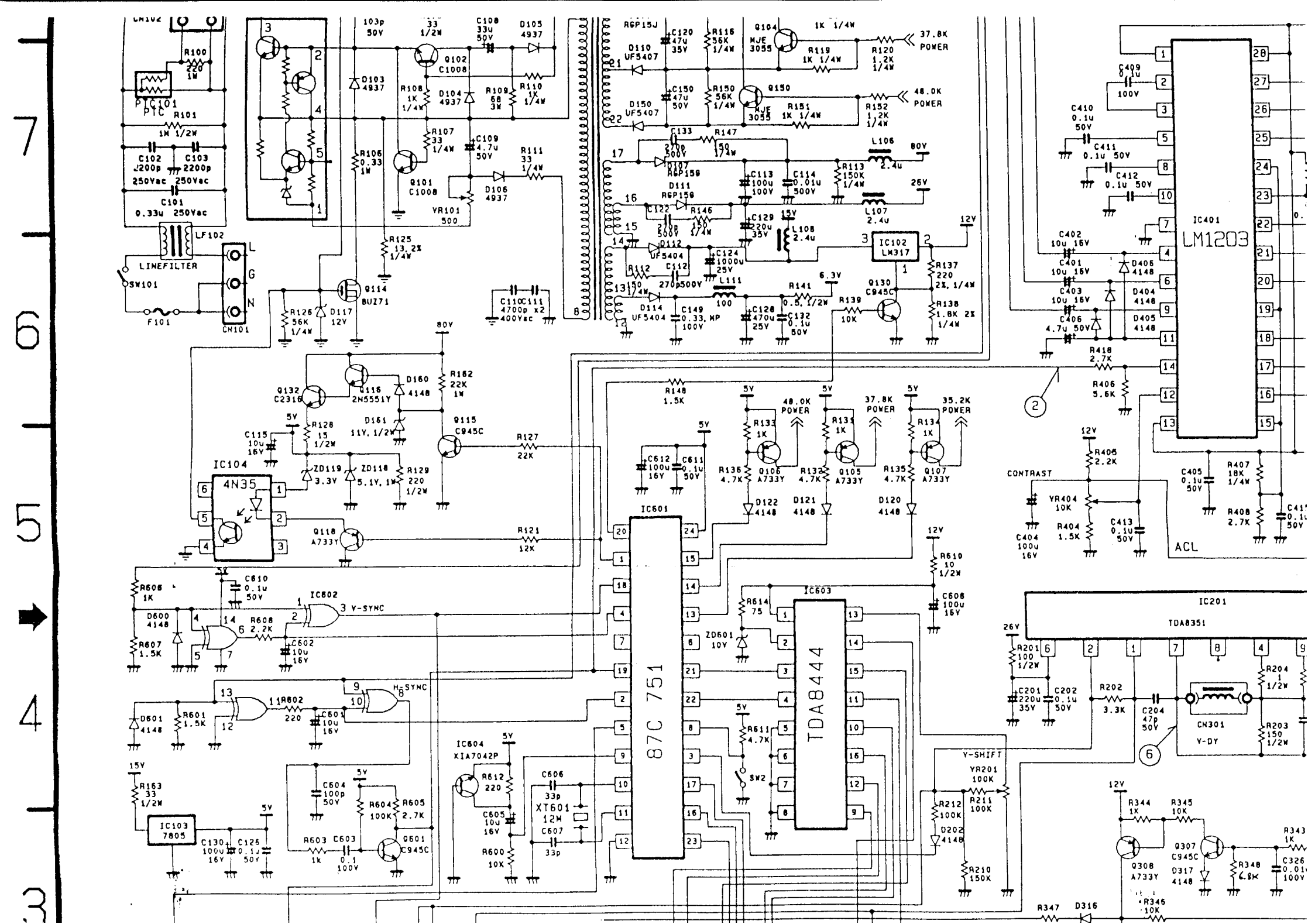
IC401
LM1203
IC601
87C 751
IC603
TDA8444
IC201
TDA8351
IC102
LM317
IC104
4N35
IC103
7805
IC604
KIA7042P
IC602
Y-SYNC
H-SYNC
LINEFILTER
CN101
CN301
Y-DY
Y-SHIFT
CONTRAST
ACL
POWER
37.8K
48.0K
35.2K
XT601
12M
PTC101
PTC
LF102
SW101
F101
Q114
BUZ71
Q130
C945C
Q116
2N5551Y
Q118
A733Y
Q105
A733Y
Q106
A733Y
Q107
A733Y
Q308
A733Y
Q307
C945C
Q601
C945C
Q104
MJE 3055
Q150
MJE 3055
Q102
C1008
Q101
C1008
D110
UF5407
D150
UF5407
D107
RGP15G
D111
RGP15G
D112
UF5404
D114
UF5404
D161
11V, 1/2W
D160
4148
D117
12V
D105
4937
D103
4937
D104
4937
D106
4937
YR101
500
YR404
10K
YR201
100K
CN102

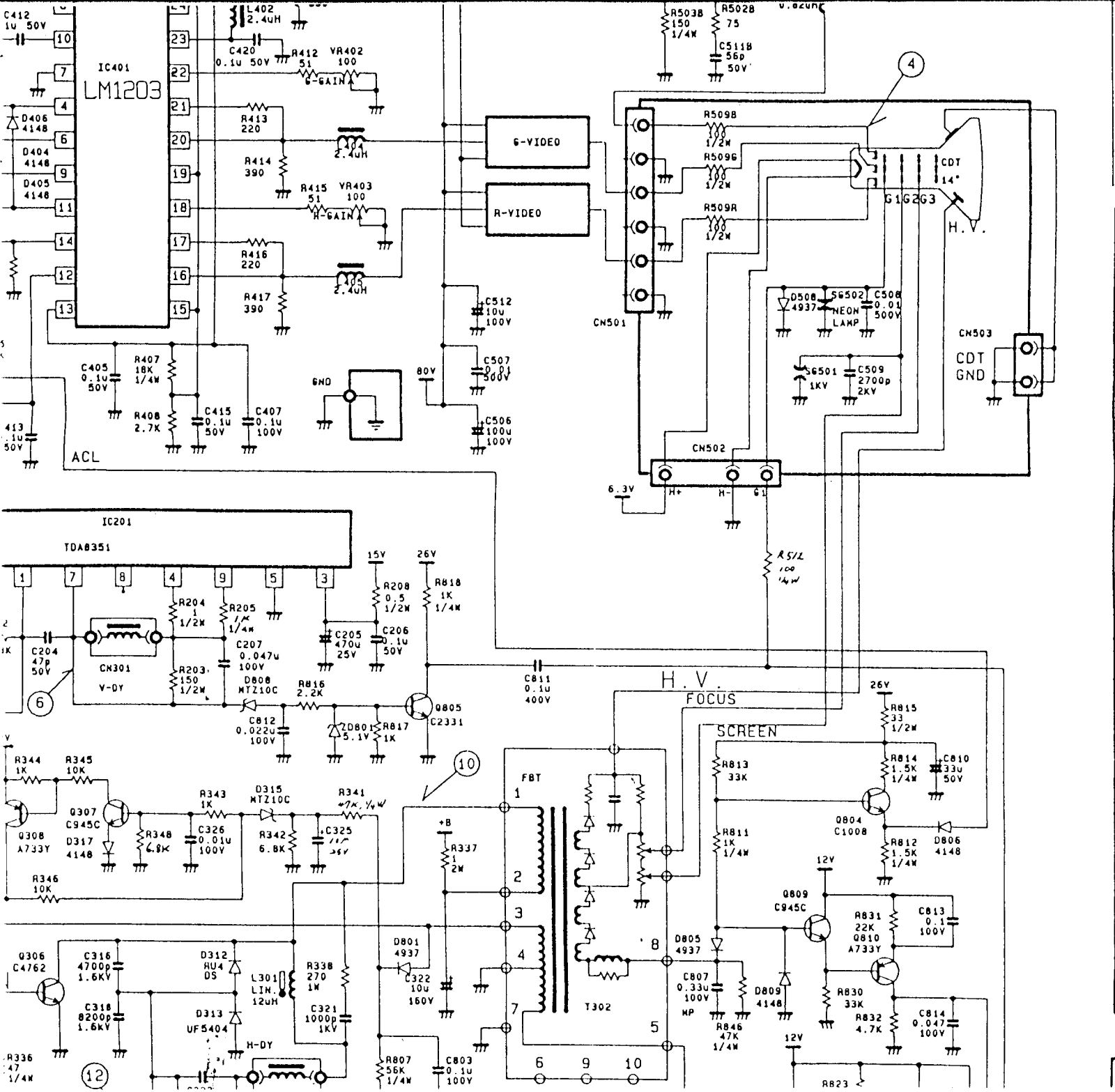
IC401
LM1203
G-VIDEO
R-VIDEO
CN501
CN502
CN503
CDT
14"
G1G2G3
H.V.
CDT
GND
NEON
LAMP
GND
ACL
IC201
TDA8351
CN301
V-DY
H-DY
H.V.
FOCUS
SCREEN
FBT
T302
Q805
C2331
Q804
C1008
Q809
C945C
Q810
A733Y
Q307
C945C
Q308
A733Y
Q306
C4762
D808
MTZ10C
D315
MTZ10C
D312
RU4
DS
D313
UF5404
L301
LIN.
12uH
D801
4937
D805
4937
D806
4148
D809
4148
D317
4148
D406
4148
D404
4148
D405
4148
D508
4937
ZD801
5.1V
6.3V
80V
15V
26V
12V
6
5
4
3
VOLTAGE & WAVEFORMS
1 350Vp-p
2 4Vp-p
3 3.5Vp-p
4 90V- 36Vp-p
5 2.2Vp-p
6 40V -5V
7 2.5Vp-p
8 50Vp-p
9 1V -10V
10 1100Vp-p
11 1Vp-p
12 8Vp-p

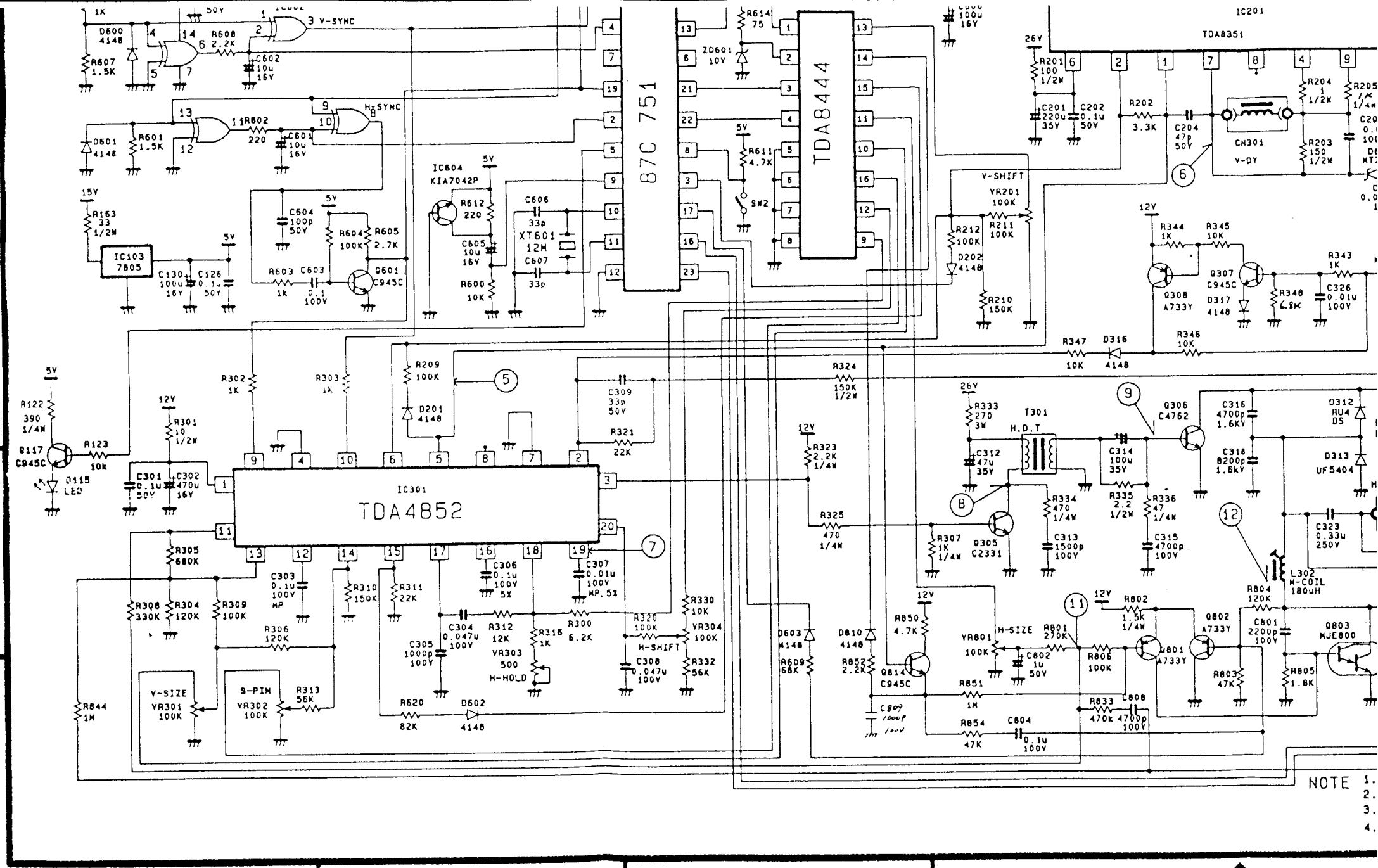

★TF-041 ('92.5.1) REV.06

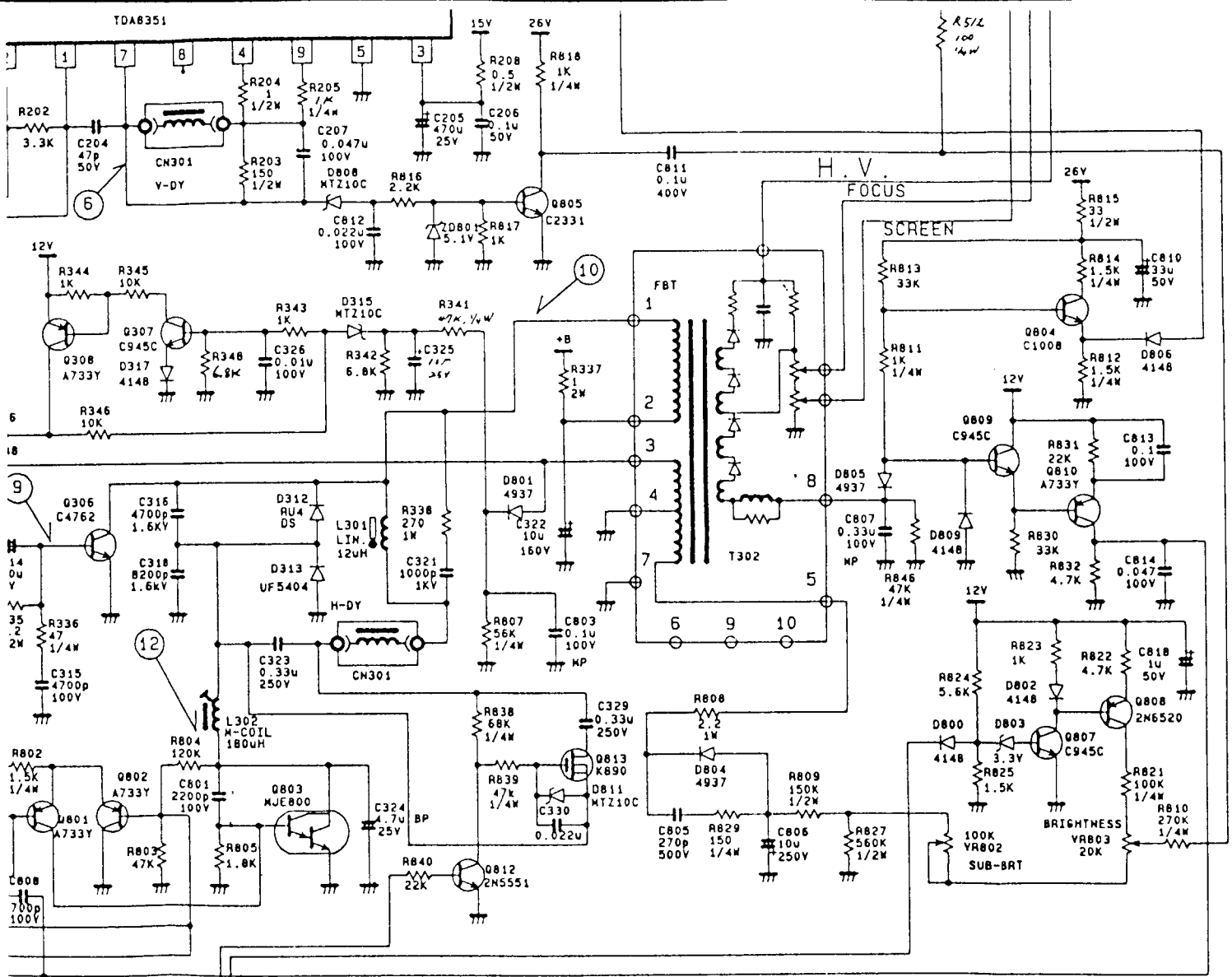

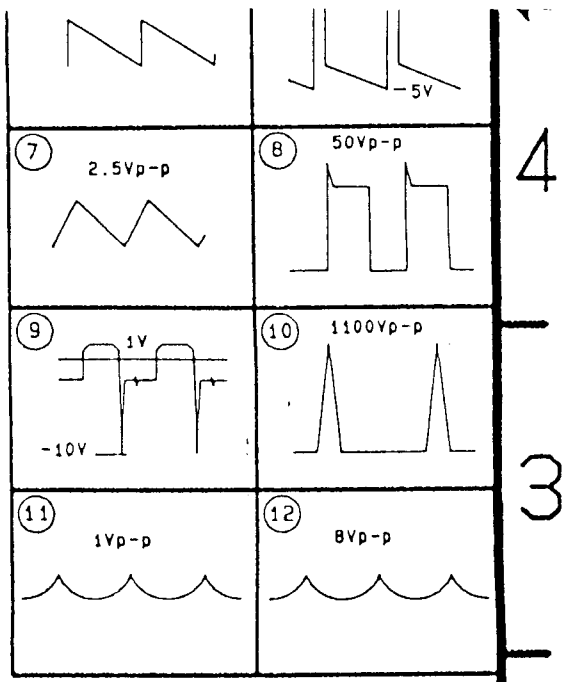

NOTE
1. RESISTER VALUES ARE ohm. K=1,000ohm M=1,000,000ohm.
2. ALL RESISTERS ARE 1/6W, UNLESS OTHERWISE INDICATED.
3. CAPACITOR VALUES ARE FARAD(F). u=1/1,000,000F p=1/1,000,000u.
4. DIODE NAME : 4148=1N4148, 4937=1N4937

(2) PCB ARTWORK DRAWINGS

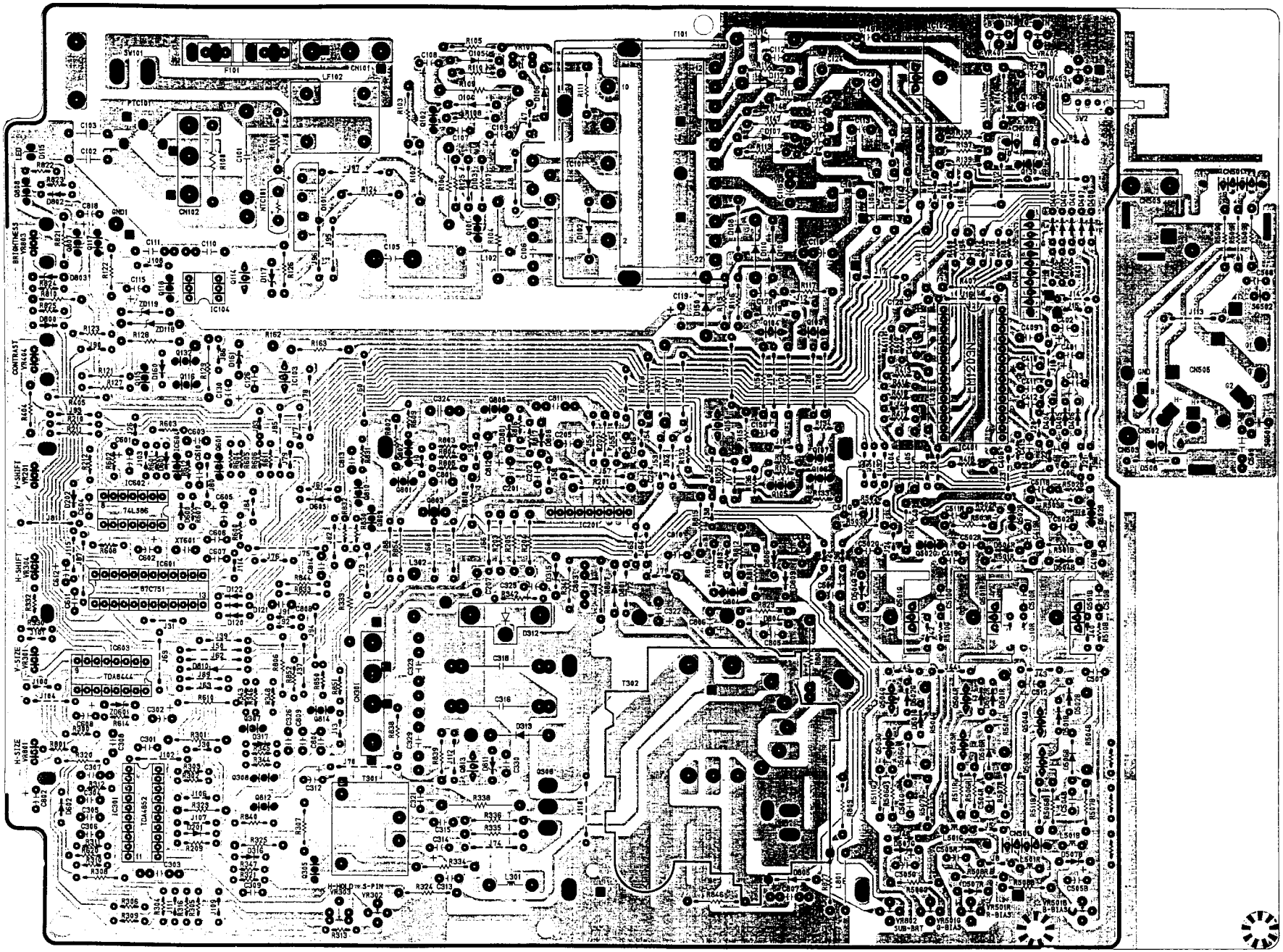

SOLDER SIDE MARKING/MASK/PATTERN
16-111-01535PS

[2] PCB ARTWORK DRAWINGS

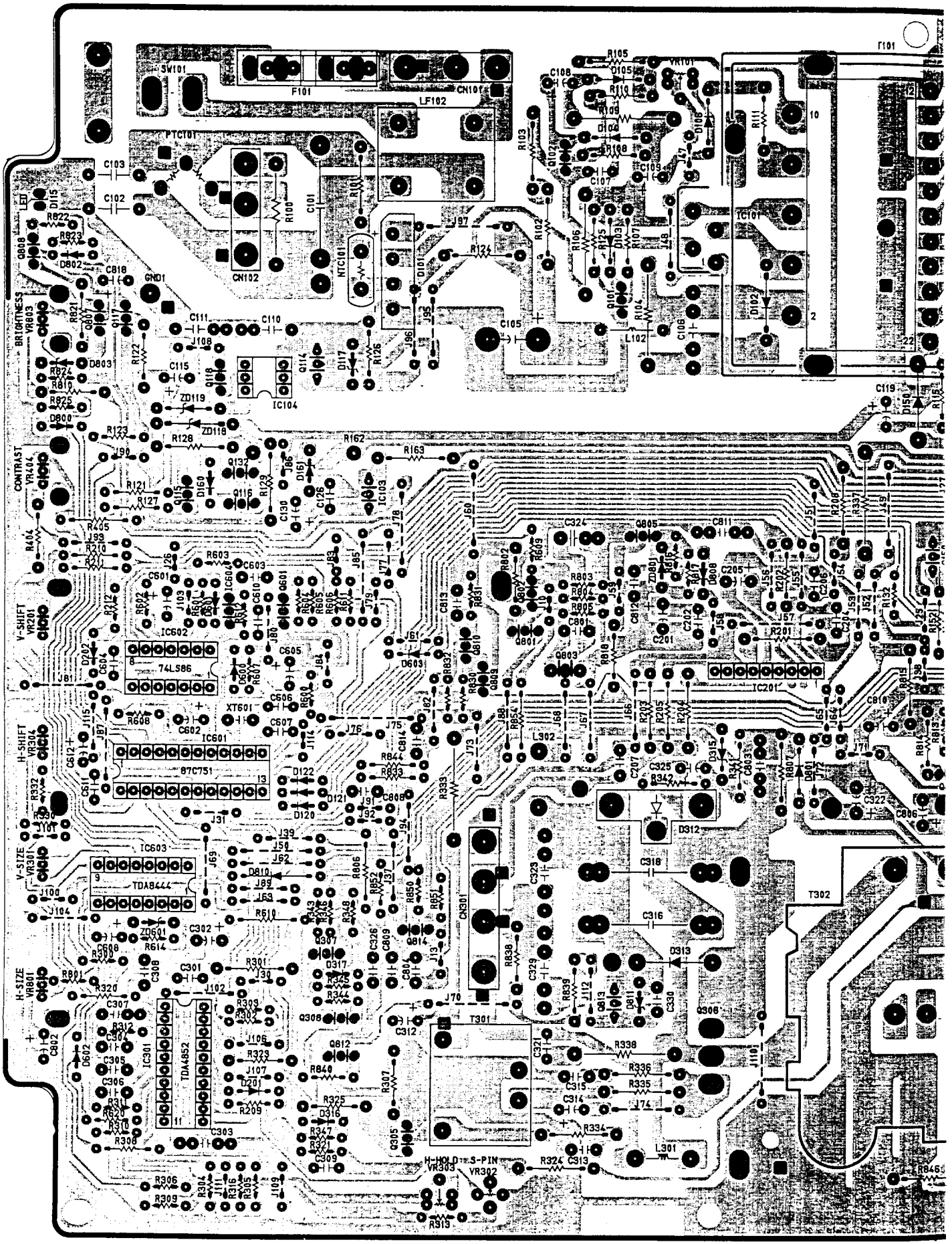

SOLDER SIDE MARKING/MASK/PATTERN
16-111-01535PS

DOCUMENT NO

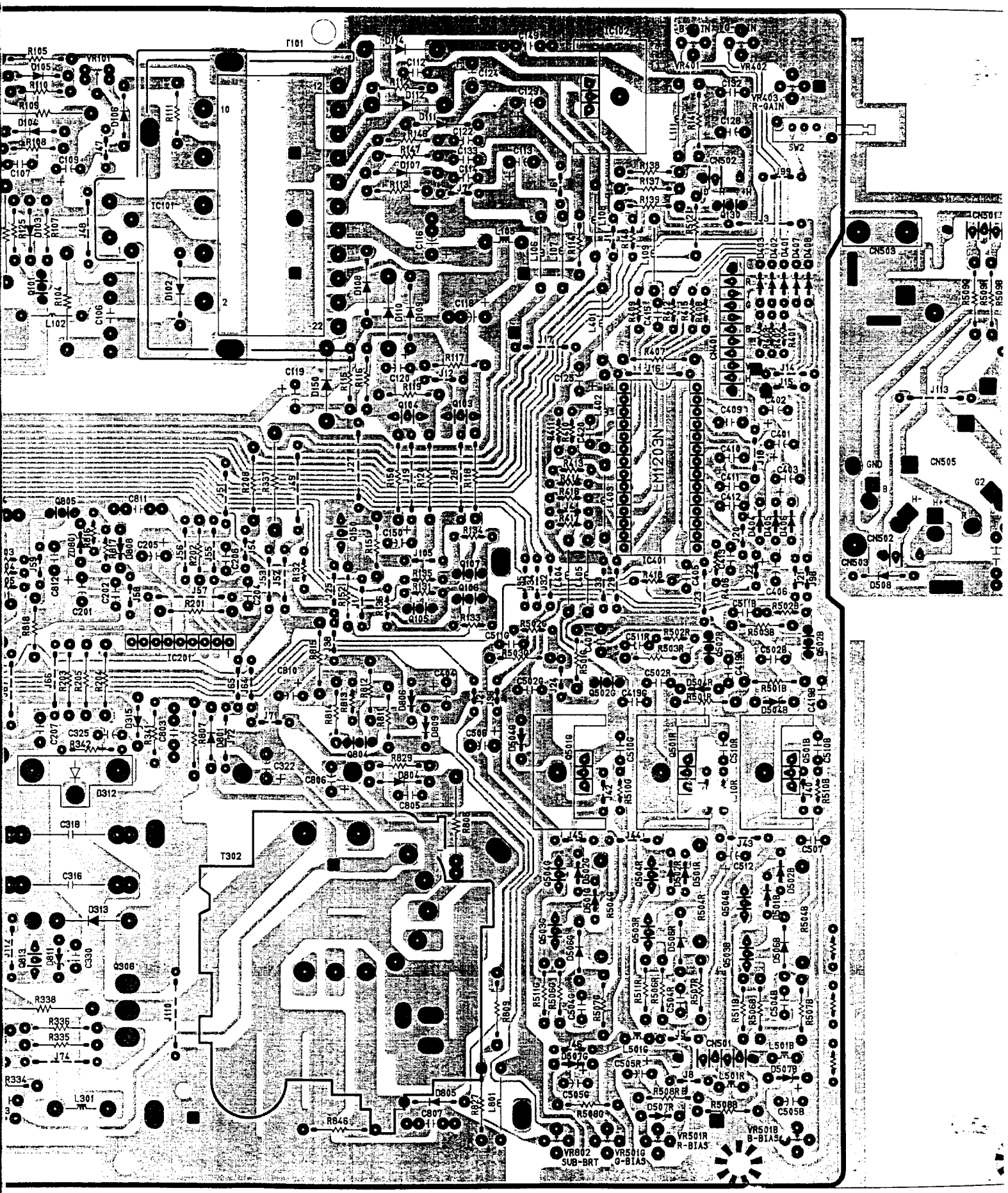
T101
TC102
VR401
VR402
VR403
R-GAIN
SW2
CN502
CN503
CN505
CN501
TC101
TC401
TC201
EM1203N
T302
VR801
SUB-BRT
VR501G
G-BIAS
VR501R
R-BIAS
VR501B
B-BIAS
GND
G2
D508

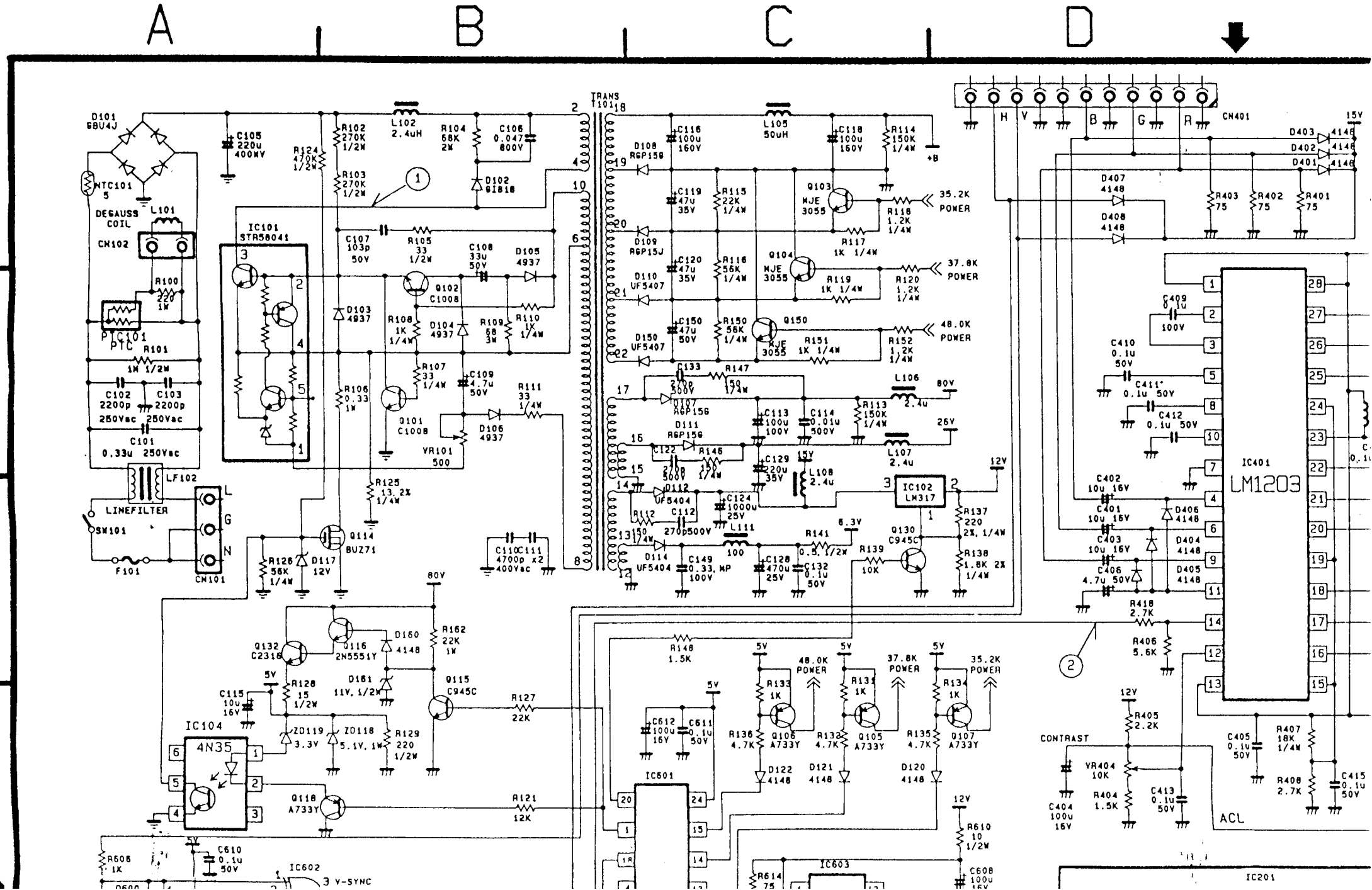
A
B
C
D
8
7
6
5
D101 GBU4J
NTC101 5
DEGAUSS COIL
L101
CN102
R100 220 1W
PTC101 PTC
R101 1W 1/2W
C102 2200p 250Vac
C103 2200p 250Vac
C101 0.33u 250Vac
LF102
LINEFILTER
SW101
F101
CN101
L
G
N
C105 220u 400WV
R124 470K 1/2W
R102 270K 1/2W
R103 270K 1/2W
L102 2.4uH
R104 68K 2W
C106 0.047 800V
D102 6J8B
IC101 STR58041
C107 103p 50V
R105 33 1/2W
C108 33u 50V
D105 4937
Q102 C1008
D103 4937
R108 1K 1/4W
D104 4937
R109 68 3W
R110 1K 1/4W
R106 0.33 1W
R107 33 1/4W
C109 4.7u 50V
Q101 C1008
R111 33 1/4W
D106 4937
VR101 500
R125 13.2K 1/4W
R126 56K 1/4W
D117 12V
Q114 BUZ71
C110 C111 4700p x2 400Vac
TRANS T101
D108 RGP15G
C116 100u 160V
L105 50uH
C118 100u 160V
R114 150K 1/4W
+B
D109 RGP15J
C119 47u 35V
R115 22K 1/4W
Q103 MJE 3055
R118 1.2K 1/4W
35.2K POWER
R117 1K 1/4W
D110 UF5407
C120 47u 35V
R116 56K 1/4W
Q104 MJE 3055
R119 1K 1/4W
R120 1.2K 1/4W
37.8K POWER
D150 UF5407
C150 47u 50V
R150 56K 1/4W
Q150 MJE 3055
R151 1K 1/4W
R152 1.2K 1/4W
48.0K POWER
C133 270p 500V
R147 50 1/4W
Q107 RGP15G
D111 RGP15G
C113 100u 100V
C114 0.01u 500V
R113 150K 1/4W
L106 2.4u
80V
26V
L107 2.4u
C122 270p 500V
R146 50 1/4W
C129 220u 35V
15V
L108 2.4u
D112 UF5404
C124 1000u 25V
IC102 LM317
12V
R137 220 2% 1/4W
R138 1.8K 2% 1/4W
R112 150 1/4W
C112 270p500V
L111 100
R141 0.5 1/2W
6.3V
Q130 C945C
R139 10K
D114 UF5404
C149 0.33 MP 100V
C128 470u 25V
C132 0.1u 50V
CN401
H
V
B
G
R
D403 4148
D402 4148
D401 4148
D407 4148
D408 4148
R403 75
R402 75
R401 75
IC401 LM1203
C409 0.1u 100V
C410 0.1u 50V
C411 0.1u 50V
C412 0.1u 50V
C402 10u 16V
C401 10u 16V
C403 10u 16V
C406 4.7u 50V
D406 4148
D404 4148
D405 4148
R418 2.7K
R406 5.6K
R405 2.2K
CONTRAST
YR404 10K
R404 1.5K
C404 100u 16V
C413 0.1u 50V
C405 0.1u 50V
R407 18K 1/4W
R408 2.7K
C415 0.1u 50V
ACL
Q132 C2316
Q116 2N5551Y
D160 4148
R162 22K 1W
D161 11V, 1/2W
Q115 C945C
R128 15 1/2W
C115 10u 16V
R127 22K
IC104 4N35
ZD119 3.3V
ZD118 5.1V, 1W
R129 220 1/2W
Q118 A733Y
R121 12K
R148 1.5K
C612 100u 16V
C611 0.1u 50V
R133 1K
R131 1K
R134 1K
48.0K POWER
37.8K POWER
35.2K POWER
R136 4.7K
Q106 A733Y
R132 4.7K
Q105 A733Y
R135 4.7K
Q107 A733Y
D122 4148
D121 4148
D120 4148
IC601
R606 1K
C610 0.1u 50V
IC602
3 V-SYNC
R610 10 1/2W
IC603
R614 75
C608 100u 16V
IC201

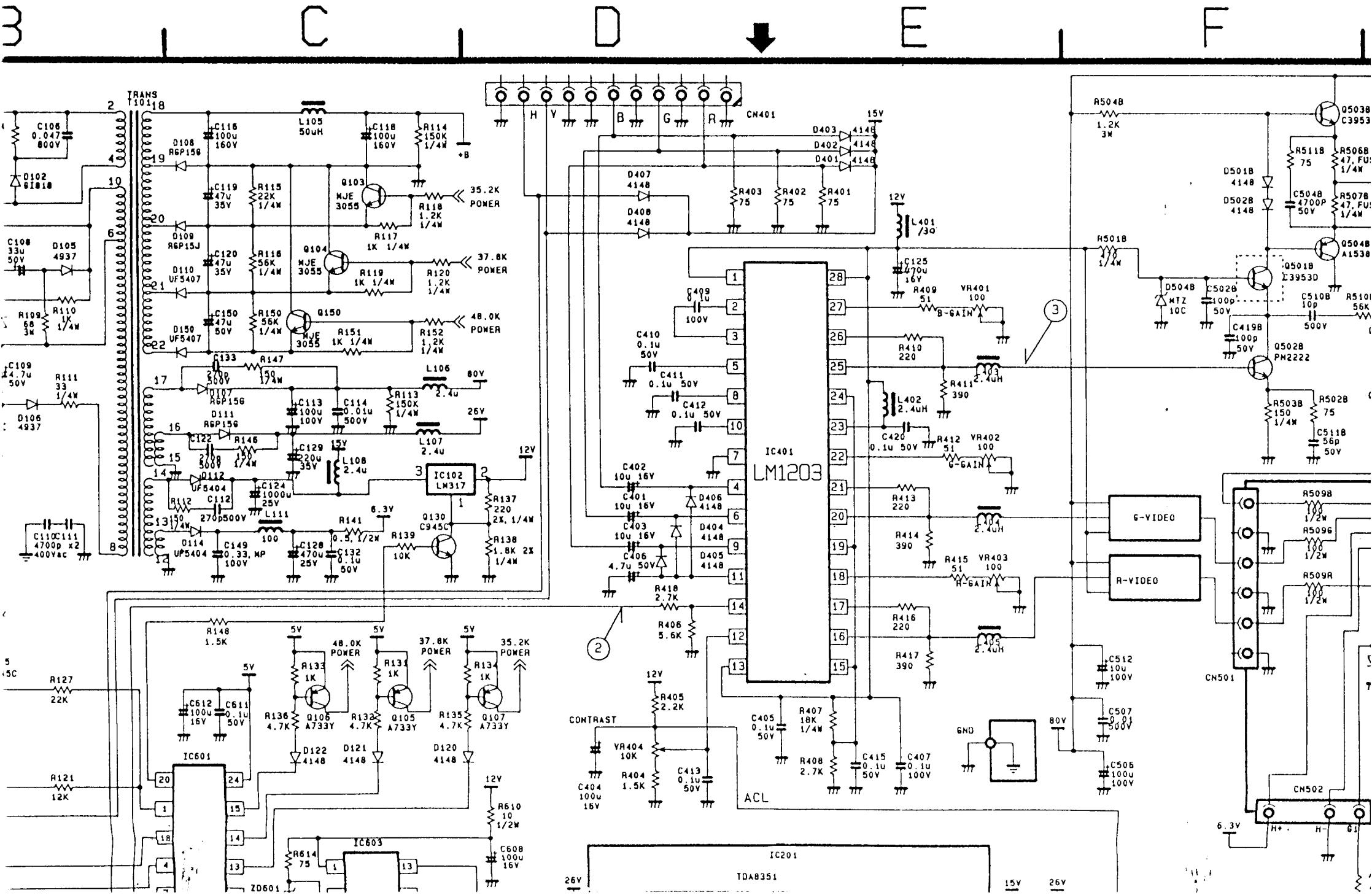
B C D E F
TRANS T101
C106 0.047 800V
D102 6I818
C108 33u 50V
D105 4937
R109 68 3W
R110 1K 1/4W
C109 4.7u 50V
R111 33 1/4W
D106 4937
C110 C111 4700p x2 400Vac
C116 100u 160V
L105 50uH
C118 100u 160V
R114 150K 1/4W
+B
D108 RGP15G
C119 47u 35V
R115 22K 1/4W
Q103 MJE 3055
R118 1.2K 1/4W
35.2K POWER
R117 1K 1/4W
D109 RGP15J
C120 47u 35V
R116 56K 1/4W
Q104 MJE 3055
R119 1K 1/4W
R120 1.2K 1/4W
37.8K POWER
D110 UF5407
C150 47u 50V
R150 56K 1/4W
Q150 MJE 3055
R151 1K 1/4W
R152 1.2K 1/4W
48.0K POWER
D150 UF5407
C133 270p 500V
R147 150 1/4W
L106 2.4u
80V
D107 RGP15G
C113 100u 100V
C114 0.01u 500V
R113 150K 1/4W
26V
D111 RGP15G
C122 270p 500V
R146 150 1/4W
C129 220u 35V
L108 2.4u
L107 2.4u
15V
12V
IC102 LM317
D112 UF5404
C124 1000u 25V
R112 150 1/4W
C112 270p500V
L111 100
R137 220 2%, 1/4W
R138 1.8K 2% 1/4W
D114 UF5404
C149 0.33, MP 100V
C128 470u 25V
C132 0.1u 50V
R141 0.5, 1/2W
6.3V
R139 10K
Q130 C945C
H V B G R
CN401
D403 4148
D402 4148
D401 4148
D407 4148
D408 4148
R403 75
R402 75
R401 75
L401 /30
C125 470u 16V
IC401 LM1203
C409 0.1u 100V
C410 0.1u 50V
C411 0.1u 50V
C412 0.1u 50V
R409 51
VR401 100
B-GAIN
R410 220
L103 2.4uH
R411 390
L402 2.4uH
C420 0.1u 50V
R412 51
VR402 100
G-GAIN
C402 10u 16V
C401 10u 16V
C403 10u 16V
C406 4.7u 50V
D406 4148
D404 4148
D405 4148
R413 220
L104 2.4uH
R414 390
R415 51
VR403 100
R-GAIN
R418 2.7K
R406 5.6K
R416 220
L105 2.4uH
R417 390
R148 1.5K
R127 22K
R121 12K
5V
48.0K POWER
37.8K POWER
35.2K POWER
R133 1K
R131 1K
R134 1K
R136 4.7K
R132 4.7K
R135 4.7K
Q106 A733Y
Q105 A733Y
Q107 A733Y
D122 4148
D121 4148
D120 4148
C612 100u 16V
C611 0.1u 50V
IC601
ZD601
IC603
R614 75
R610 10 1/2W
C608 100u 16V
12V
CONTRAST
VR404 10K
C404 100u 16V
R404 1.5K
R405 2.2K
C413 0.1u 50V
C405 0.1u 50V
R407 18K 1/4W
R408 2.7K
C415 0.1u 50V
C407 0.1u 100V
GND
ACL
IC201 TDA8351
26V
15V
R504B 1.2K 3W
Q503B C3953
R511B 75
R506B 47, FUS 1/4W
D501B 4148
D502B 4148
C504B 4700P 50V
R507B 47, FUS 1/4W
Q504B A1538
R501B 470 1/4W
Q501B C3953D
D504B MTZ 10C
C502B 100p 50V
C510B 10p 500V
C419B 100p 50V
Q502B PN2222
R503B 150 1/4W
R502B 75
C511B 56p 50V
G-VIDEO
R-VIDEO
C512 10u 100V
C507 0.01 500V
C506 100u 100V
80V
CN501
R509B 1/2W
R509G 100 1/2W
R509R 100 1/2W
CN502
6.3V
H+
H-
G1

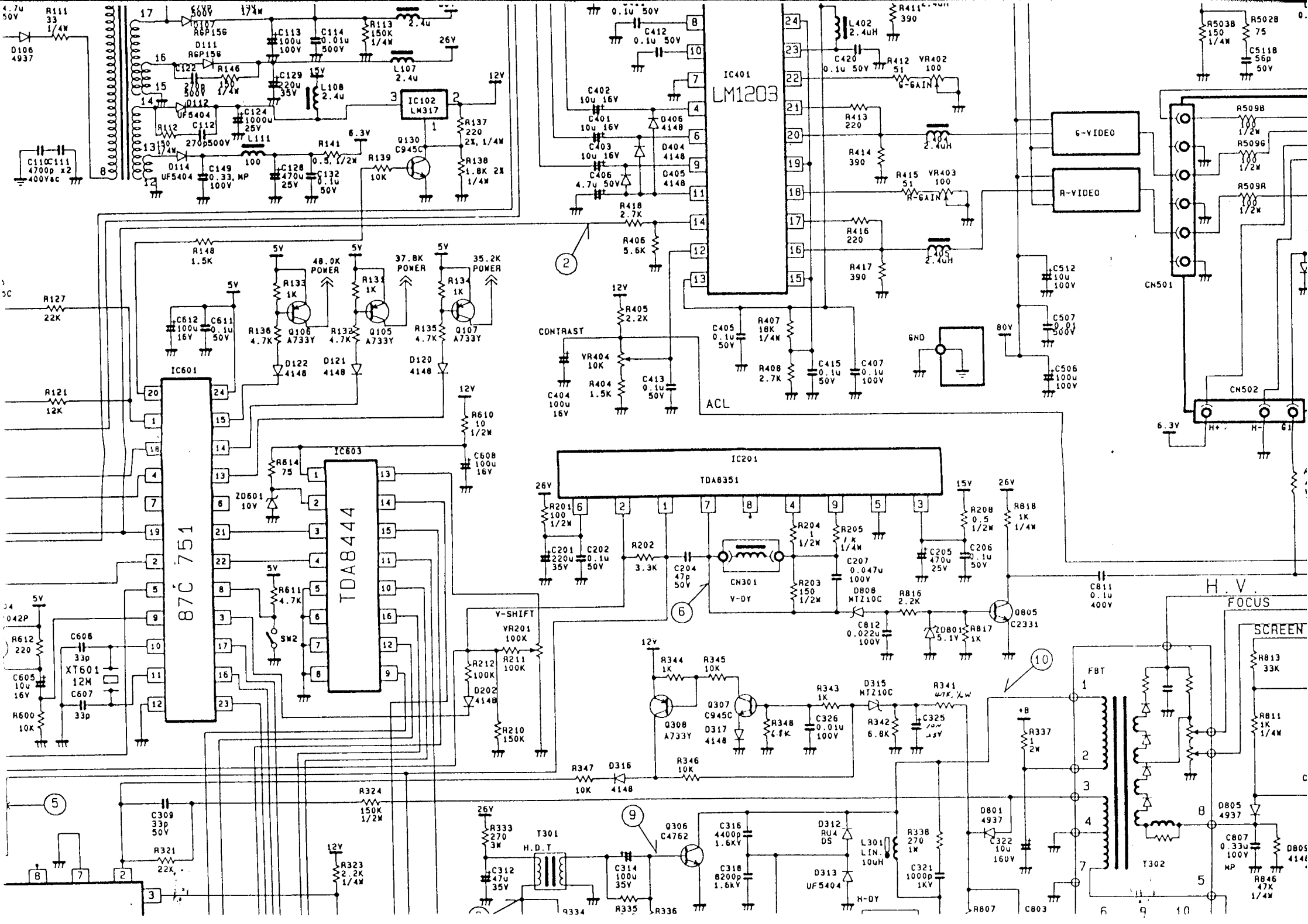
IC401
LM1203
IC601
87C 751
IC603
TDA8444
IC201
TDA8351
IC102
LM317
CN501
CN502
CN301
V-DY
G-VIDEO
R-VIDEO
G-GAIN
R-GAIN
CONTRAST
ACL
GND
48.0K POWER
37.8K POWER
35.2K POWER
V-SHIFT
XT601
12M
H.D.T
T301
T302
FBT
H.V.
FOCUS
SCREEN
H-DY

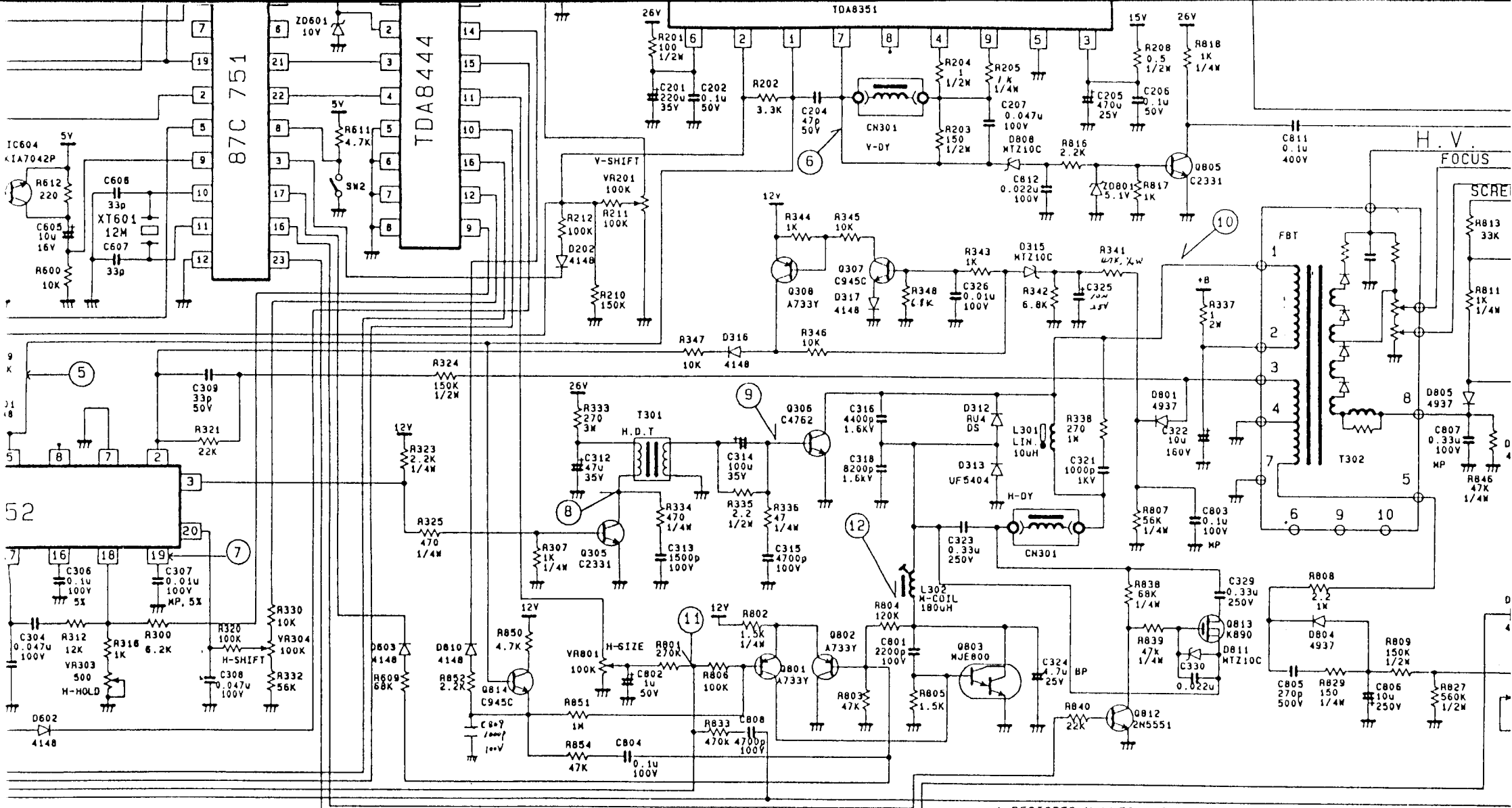

NOTE
1. RESISTER VALUES ARE ohm. K=1,000ohm M=1,000,000ohm.
2. ALL RESISTERS ARE 1/6W, UNLESS OTHERWISE INDICATED.
3. CAPACITOR VALUES ARE FARAD(F). u=1/1,000,000F p=1/1,000,000u.
4. DIODE NAME : 4148=1N4148, 4937=1N4937

B C D E F

DOCUMENT NO : 13-6-10

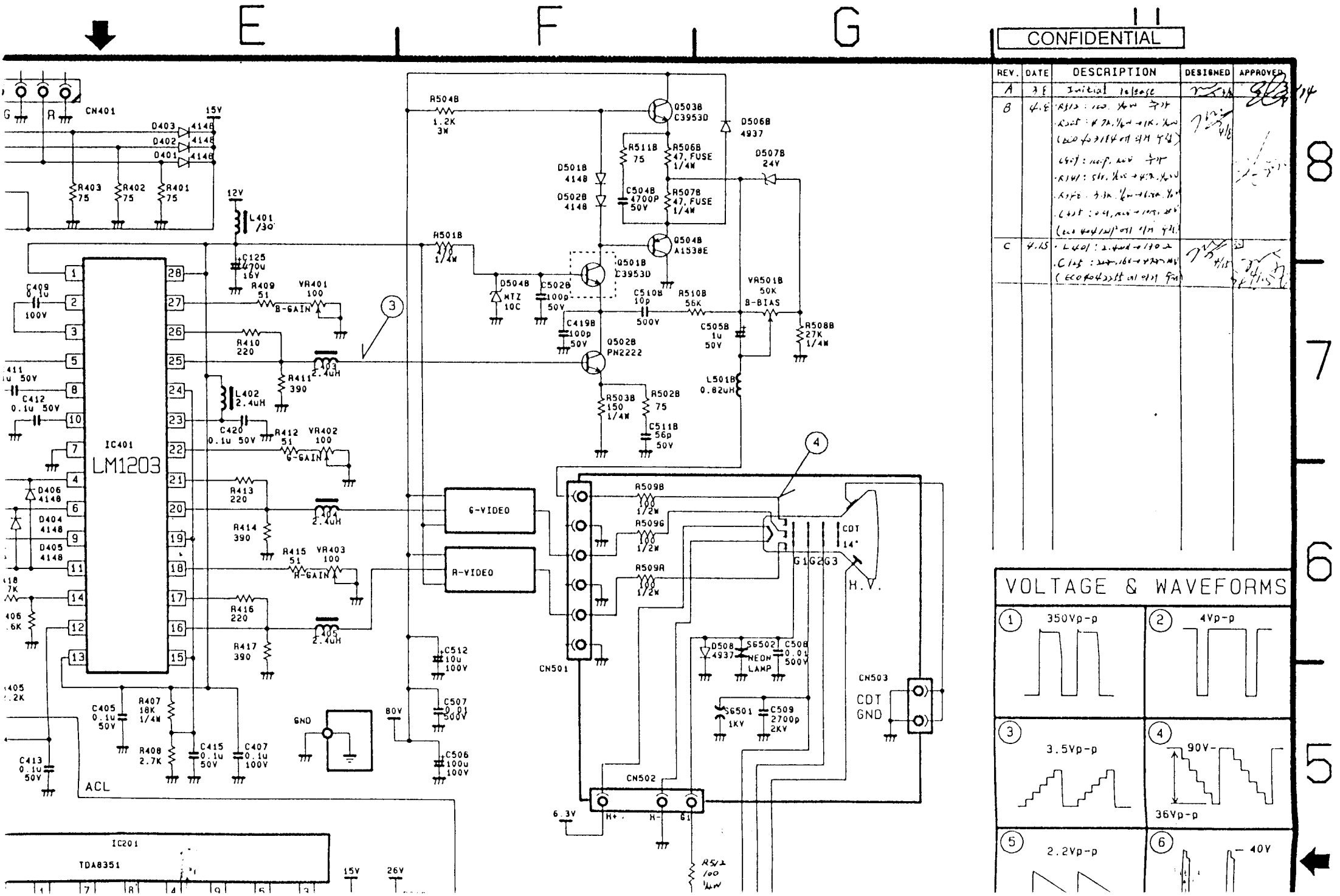

REV.	DATE	DESCRIPTION	DESIGNED	APPROVED
A	7.8	Initial release		
B	4.6	R512 : 100, 1/4W 추가 R502B : 4.7k, 1/4W → 1k, 1/4W (ECO No 3114 에 의거 수정) C512 : 100P, 50V 추가 R501 : 560, 1/4W → 470, 1/4W R502B : 3.3k, 1/4W → 1.5k, 1/4W C412 : 0.1U, 50V → 100U, 25V (ECO No 4412 에 의거 수정)		
C	4.15	· L401 : 2.4uH → 110Ω · C125 : 470, 16V → 470, 25V (ECO No 4513 에 의거 수정)		

VOLTAGE & WAVEFORMS

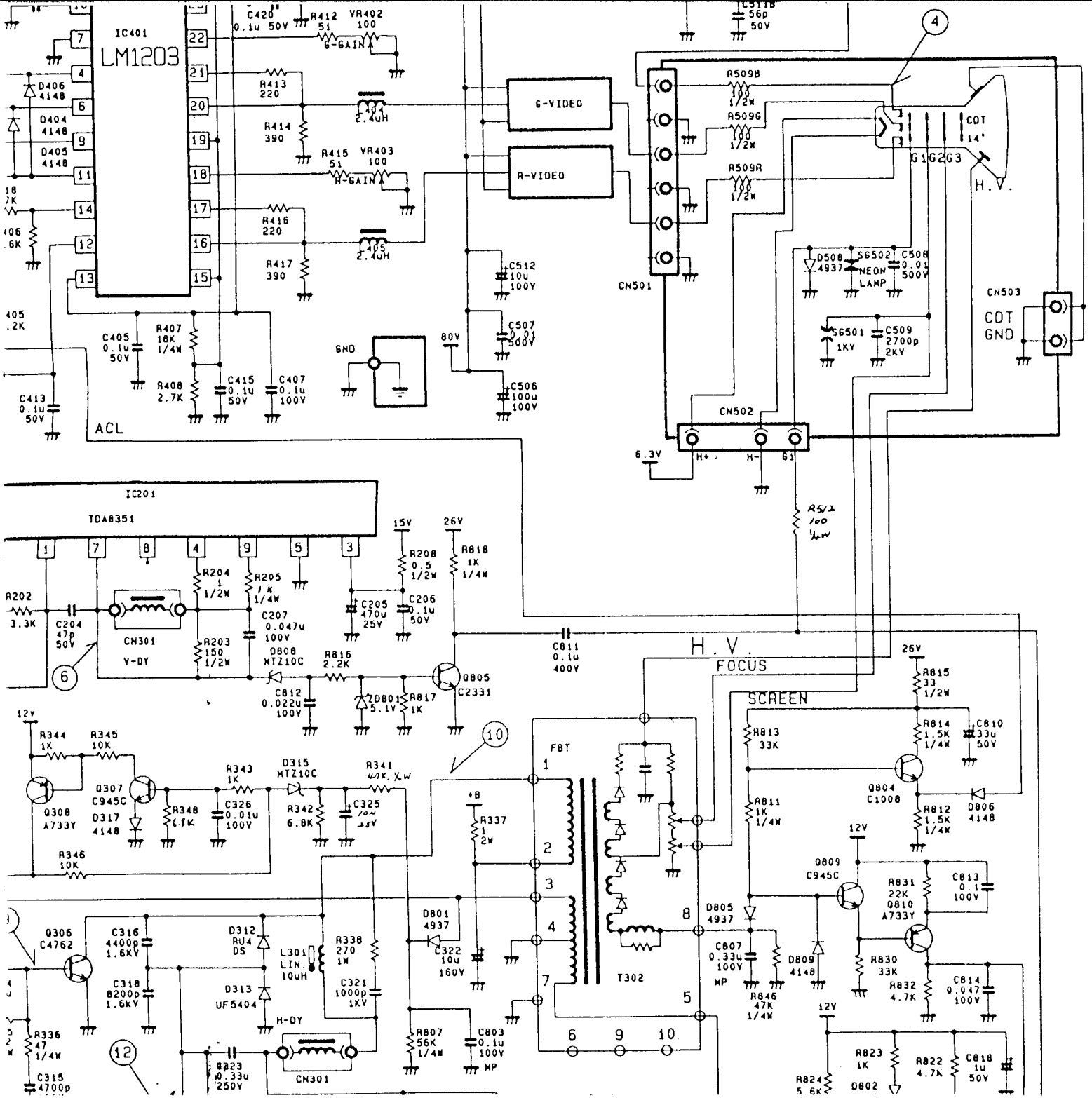
IC401
LM1203
G-VIDEO
R-VIDEO
G-GAIN
R-GAIN
CN501
CN502
CN503
CDT
GND
ACL
IC201
TDA8351
CN301
V-DY
H-DY
H.V.
FOCUS
SCREEN
FBT
T302
NEON LAMP
CDT GND

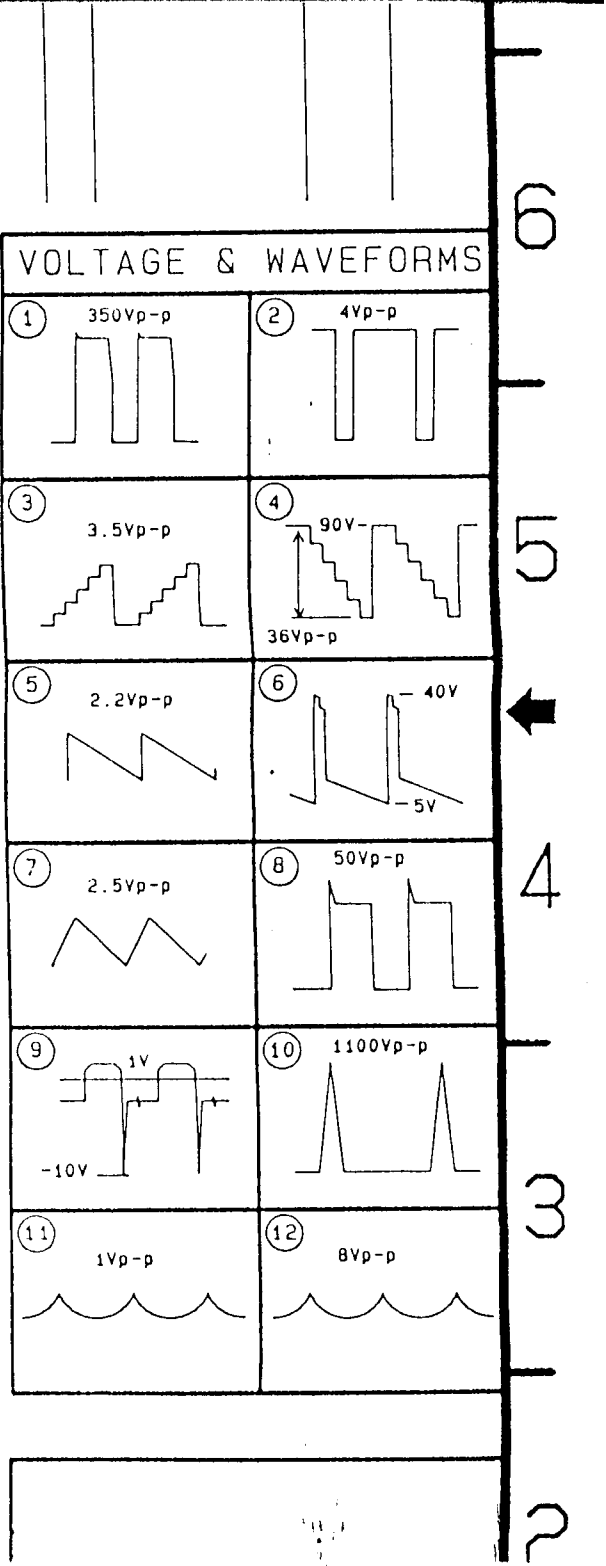
VOLTAGE & WAVEFORMS
1 350Vp-p
2 4Vp-p
3 3.5Vp-p
4 90V- 36Vp-p
5 2.2Vp-p
6 40V 5V
7 2.5Vp-p
8 50Vp-p
9 1V -10V
10 1100Vp-p
11 1Vp-p
12 8Vp-p

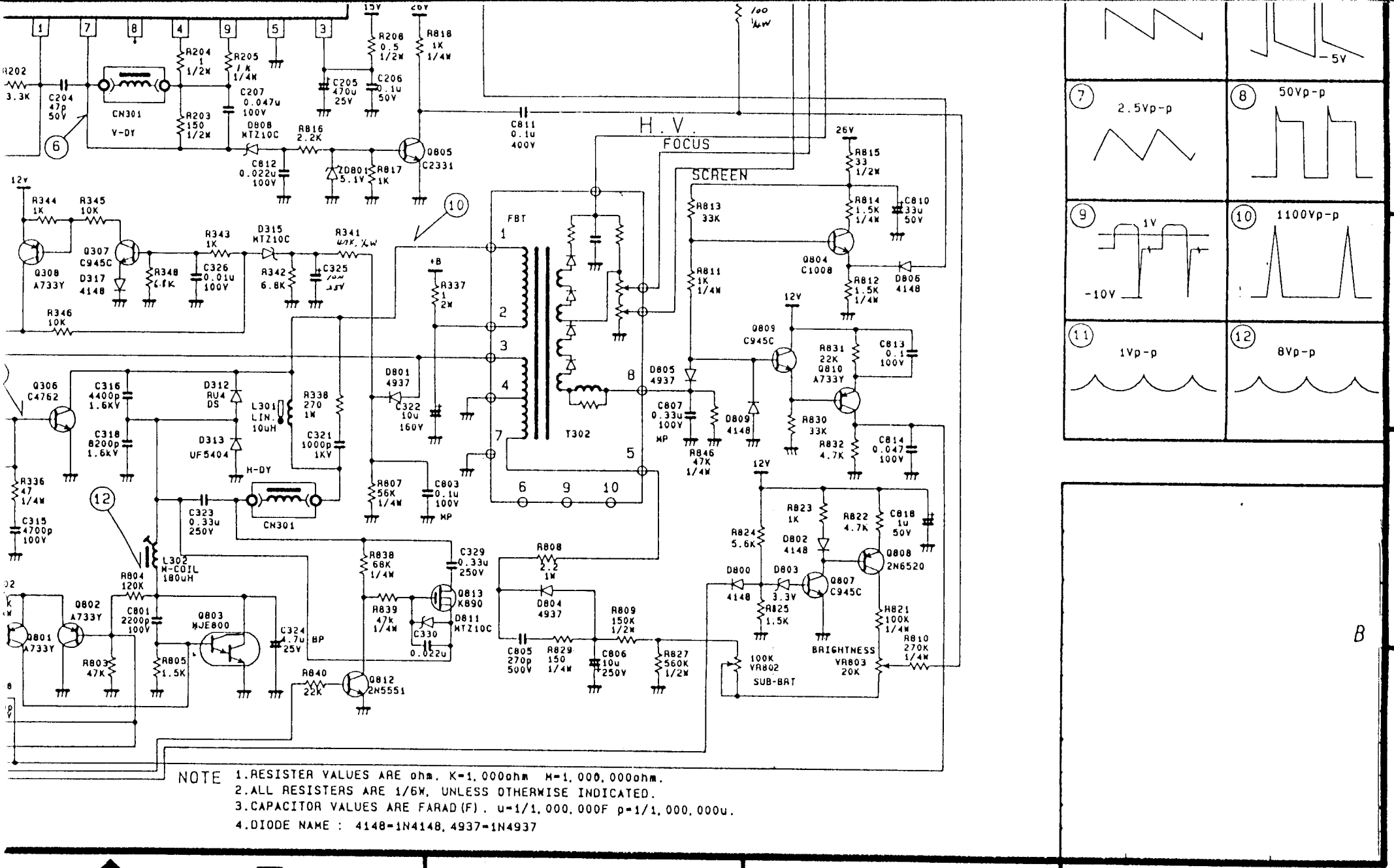

NOTE
1. RESISTER VALUES ARE ohm. K=1,000ohm M=1,000,000ohm.
2. ALL RESISTERS ARE 1/6W, UNLESS OTHERWISE INDICATED.
3. CAPACITOR VALUES ARE FARAD(F). u=1/1,000,000F p=1/1,000,000u.
4. DIODE NAME : 4148=1N4148, 4937=1N4937

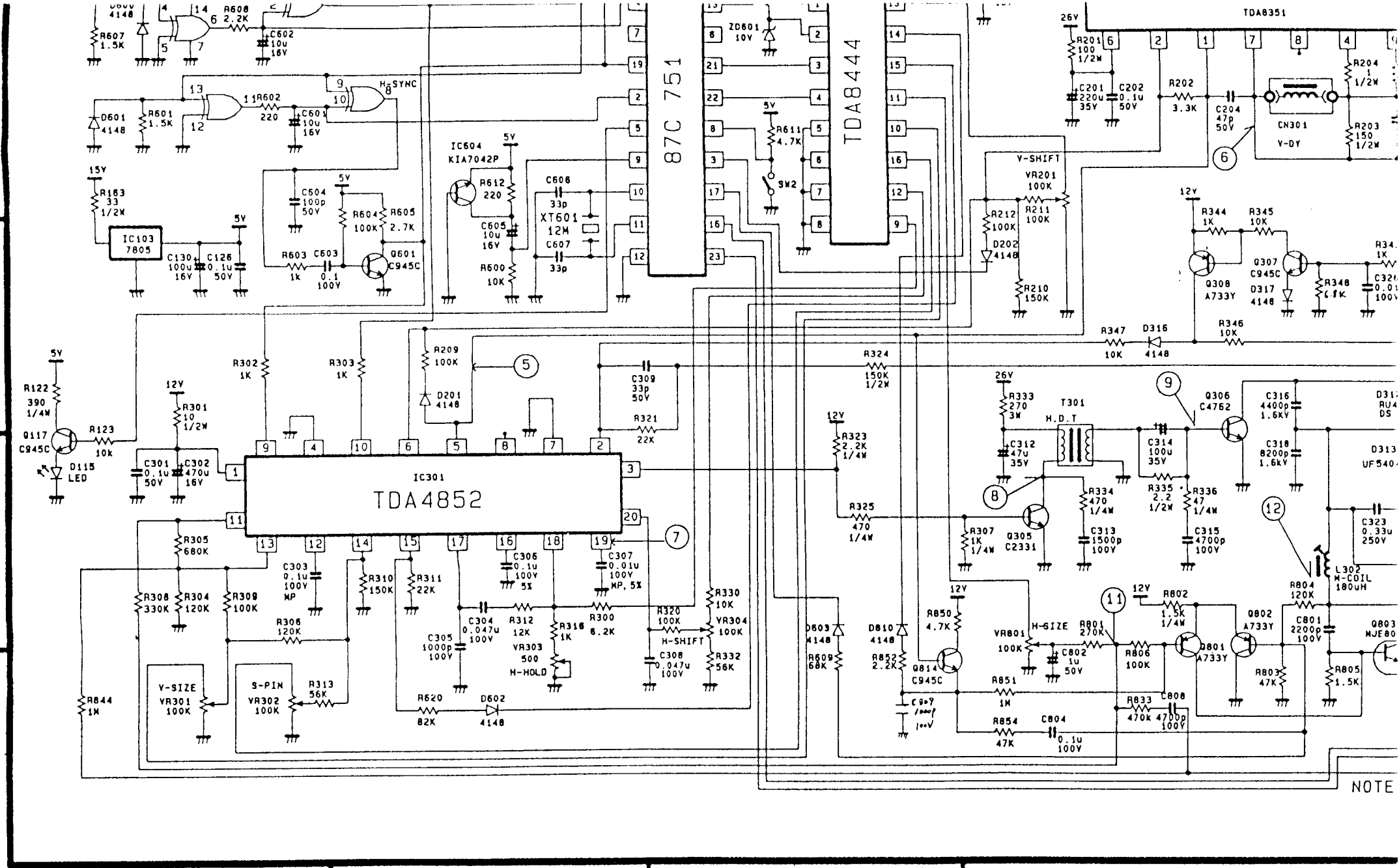

★TF-041 ('92.5.1) REV.06

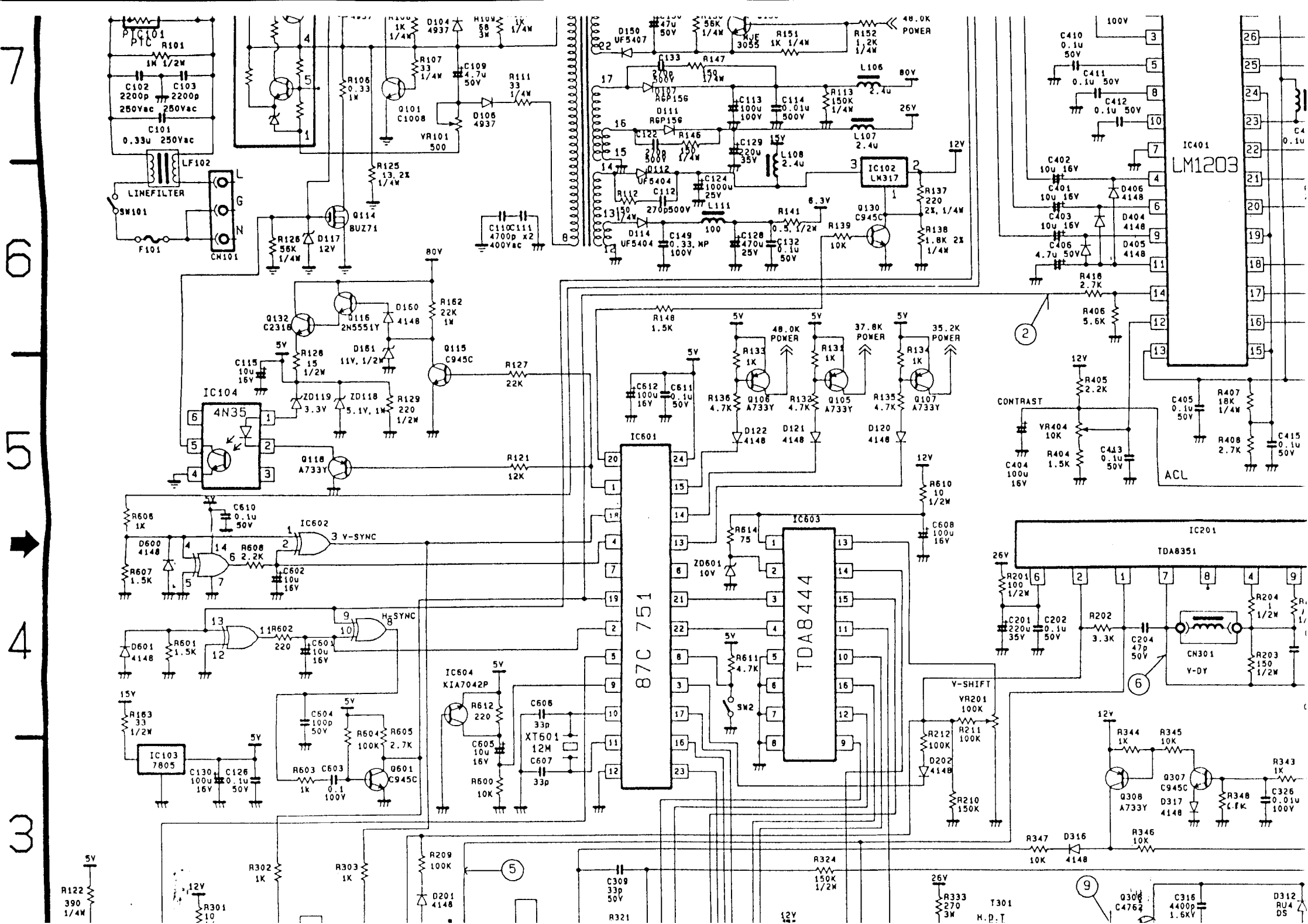
PTC101
PTC
R101
1W 1/2W
C102
2200p
250Vac
C103
2200p
250Vac
C101
0.33u 250Vac
LF102
LINEFILTER
SW101
F101
CN101
L
G
N
R106
0.33
1W
Q101
C1008
R107
33
1/4W
C109
4.7u
50V
D104
4937
R108
1K
1/4W
R110
68
3W
R111
33
1/4W
D106
4937
VR101
500
R125
13.2K
1/4W
Q114
BUZ71
R126
56K
1/4W
D117
12V
C110 C111
4700p x2
400Vac
D150
UF5407
C133
2200
500V
R147
150
1/4W
D107
RGP15G
D111
RGP15G
C122
2200
500V
R146
150
1/4W
D112
UF5404
R112
150
1/4W
C112
2700
500V
D114
UF5404
C149
0.33, MP
100V
C124
1000u
25V
L111
100
C128
470u
25V
C132
0.1u
50V
R141
0.5, 1/2W
6.3V
R139
10K
Q130
C945C
R137
220
2%, 1/4W
R138
1.8K 2%
1/4W
IC102
LM317
C113
100u
100V
C114
0.01u
500V
R113
150K
1/4W
L106
2.4u
80V
L107
2.4u
26V
C129
220u
35V
L108
2.4u
15V
12V
C47u
50V
C56K
1/4W
NJE
3055
R151
1K 1/4W
R152
1.2K
1/4W
48.0K
POWER
C410
0.1u
50V
C411
0.1u 50V
C412
0.1u 50V
IC401
LM1203
C402
10u 16V
C401
10u 16V
C403
10u 16V
C406
4.7u 50V
D406
4148
D404
4148
D405
4148
R416
2.7K
R406
5.6K
Q132
C2316
Q116
2N5551Y
D160
4148
R162
22K
1W
D161
11V, 1/2W
Q115
C945C
R127
22K
C115
10u
16V
R128
15
1/2W
ZD119
3.3V
ZD118
5.1V, 1W
R129
220
1/2W
IC104
4N35
Q118
A733Y
R121
12K
R148
1.5K
C612
1000u
16V
C611
0.1u
50V
R133
1K
R136
4.7K
Q106
A733Y
D122
4148
R132
4.7K
Q105
A733Y
D121
4148
R135
4.7K
Q107
A733Y
D120
4148
48.0K
POWER
37.8K
POWER
35.2K
POWER
CONTRAST
R405
2.2K
VR404
10K
R404
1.5K
C404
100u
16V
C443
0.1u
50V
C405
0.1u
50V
R407
18K
1/4W
R408
2.7K
C415
0.1u
50V
ACL
IC601
87C 751
R610
10
1/2W
C608
100u
16V
IC603
TDA8444
R614
75
ZD601
10V
R611
4.7K
SW2
R606
1K
C610
0.1u
50V
D600
4148
R607
1.5K
IC602
R608
2.2K
C602
10u
16V
V-SYNC
D601
4148
R601
1.5K
R602
220
C601
10u
16V
H-SYNC
R163
33
1/2W
IC103
7805
C130
100u
16V
C126
0.1u
50V
C604
100p
50V
R604
100K
R605
2.7K
R603
1k
C603
0.1
100V
Q601
C945C
IC604
KIA7042P
R612
220
C605
10u
16V
R600
10K
C606
33p
XT601
12M
C607
33p
IC201
TDA8351
R201
100
1/2W
C201
220u
35V
C202
0.1u
50V
R202
3.3K
C204
47p
50V
CN301
V-DY
R204
1
1/2W
R203
150
1/2W
V-SHIFT
VR201
100K
R211
100K
R212
100K
D202
4148
R210
150K
R344
1K
R345
10K
Q308
A733Y
Q307
C945C
D317
4148
R348
C326
0.01u
100V
R343
1K
R347
10K
D316
4148
R346
10K
R122
390
1/4W
R301
10
R302
1K
R303
1K
R209
100K
D201
4148
C309
33p
50V
R324
150K
1/2W
R321
R333
270
3W
T301
H.D.T
Q306
C4762
C316
4400p
1.6KV
D312
RU4
DS