TROUBLESHOOTING GUIDE

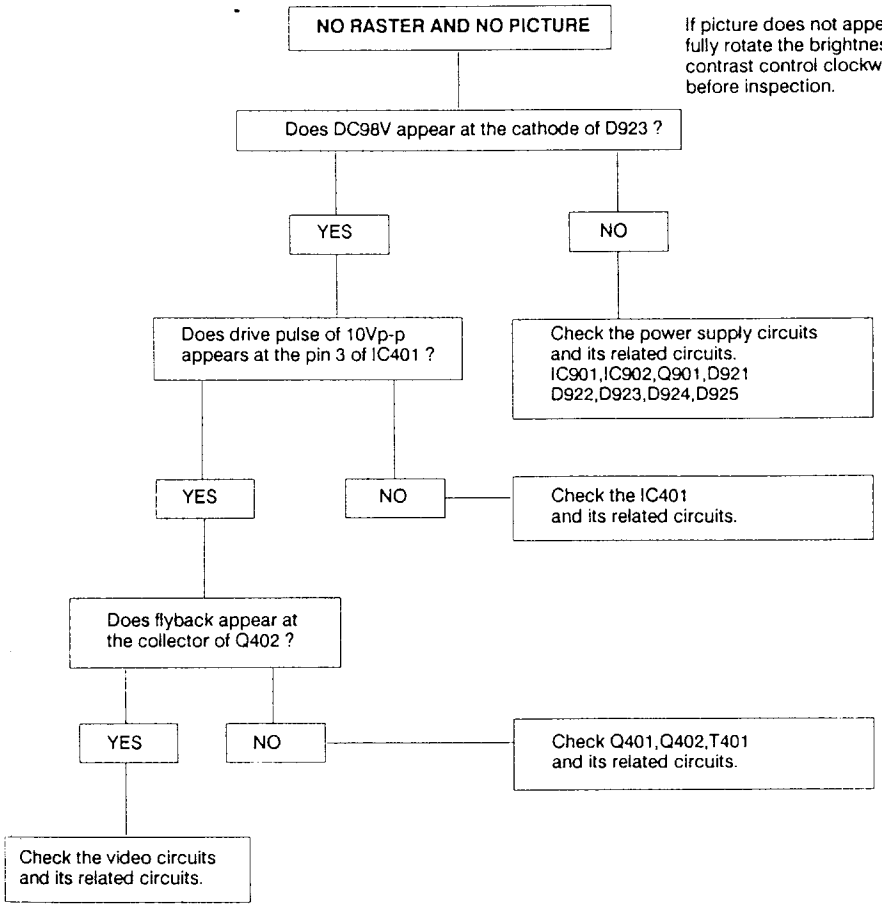

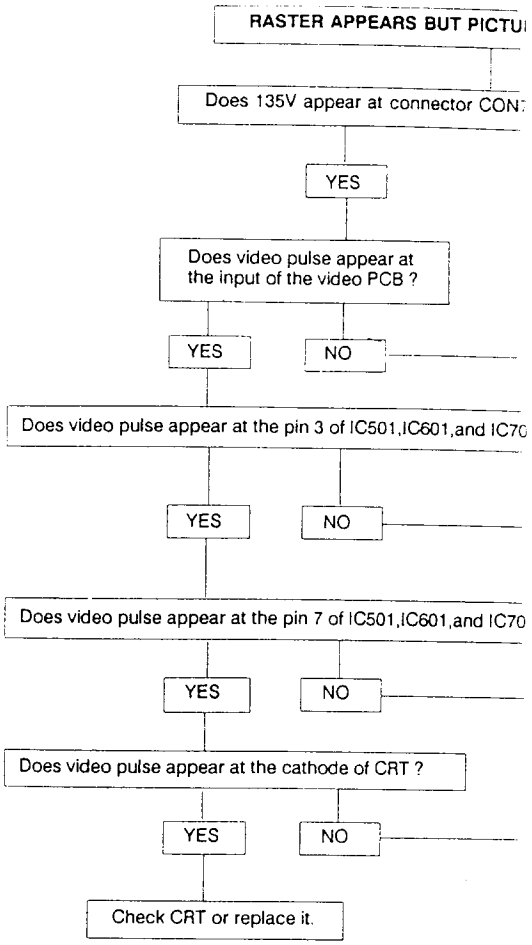

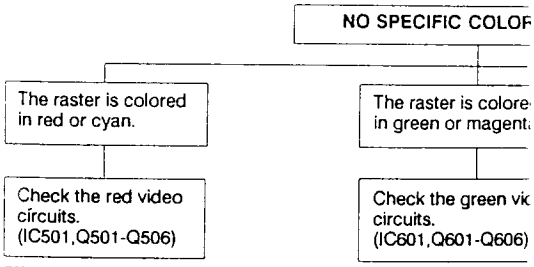

For Service Manuals contact
MAURITRON SERVICES
8 Cherry Tree Road, Chinnor
Oxfordshire, OX9 4QY.
Tel (01844) 351694
Fax (01844) 352554

CIRCUIT TO BE CHECKED

1. No raster appears
   - power circuits - horizontal output circuits
2. A high voltage develops but no raster appears.
   - video output circuits
3. A high voltage is not appeared
   - horizontal output circuits

L301	COIL-CHOKE 15UH
L302	COIL-CHOKE 250UH(60I X 12)
L401	COIL-HOR LIN (CVB4587)14X13
L403	COIL-HOR CENTER(CVB4587)12X15MM
L404	COIL-FILTER E/W(CVB4587)12X15MM
L405	COIL-CHOKE 15UH
L501	COIL-FILTER 5.6UH-K
L601	COIL-FILTER 5.6UH-K
L701	COIL-FILTER 5.6UH-K
L901	COIL-LINE,FILTER 6MH(11X16MM)
	COIL-LINE,FILTER 6.8MH (11X16MM)
L902	COIL-LINE,FILTER 6MH(11X16MM)
	COIL-RFI, CHOKE ; 39MH
L903	COIL-DEGAUSSING 210HM 11HM 1050MM
BD01	COIL-CHOKE 1.5UH + -20%
BD02	COIL-CHOKE 1.5UH + -20%
BD03	COIL-CHOKE 1.5UH + -20%
F901	FUSE,SLO-BLO (3A,250V)31.8M/M UL/CSA
	CLIP-FUSE PBP3 1/2H 0.4T SN
	FUSE ; 50T 250V 2.5A 20MM-C(SEMKO)
	HOLDER-FUSE ; FC51E,20M/M FUSE
C200	C-M POLYESTER MMY168(T)63V222M-J
C201	C-ELECTRO. CEO4W 50V.1M
C202	C-ELECTRO. CEO4W 50V 1M
C203	C-ELECTRO. CEO4W 50V 10M
C204	C-CERAMIC,HK CK45(T)B 50V 0.01M-Z
C207	C-M.POLYESTER MMY168(T) 63V 0.1M-J
C212	C-ELECTRO. CEO4W(T) 16V 220M
C233	C-M.POLYESTER MMY168(T)63V 0.0015M-J
C251	C-ELECTRO. CE04W(T) 25V 10M
C253	C-CERAMIC,HK CK45(T) B 50V 4700-K
C254	C-CERAMIC,HK CK45(T) B 50V 4700-K
C255	C-ELECTRO. CE04W(T) 25V 10M
C256	C-ELECTRO. CE04W(T) 25V 10M
C301	C-ELECTRO. CEO4W 35V 2200U
C302	C-CERAMIC,HK CK45(T) F 50V 0.1M-Z
C303	C-ELECTRO. CEO4W 35V 2200U
C304	C-ELECTRO. CEO4W(T) 50V 10M 105'C
C305	C-ELEC 105'C CE04W 35V 100UF 105'C
C306	C-ELECTRO. CEO4W(T) 50V 10M 105'C
C307	C-POLYPROPYLENE CQ922M 100V 0.1M-J
C308	C-POLYPROPYLENE CQ922M 100V 0.1M-J
C309	C-M.POLYESTER CF922M 100V 0.47M-J
C310	C-M.POLYESTER MMY168(T) 63V 0.1M-J
C311	C-ELECTRO. CEO4W 35V 2200U
C312	C-ELECTRO. CEO4W(T) 50V 4.7M
C313	C-ELECTRO. CEO4W(T) 50V 4.7M
C314	C-M.POLYESTER MMY168(T)63V 0.047M-J
C315	C-M.POLYESTER MMY168(T)63V 0.047M-J
C316	C-ELECTRO. CEO4W(T) 50V 4.7M
C317	C-ELECTRO. CEO4W(T) 50V 2.2M
C400	C-CERAMIC,HK CK45(T)
C401	C-ELECTRO. CEO4W 25
C402	C-CERAMIC,HK CK45(T)
C403	C-ELECTRO. CDO4W(T)
C404	C-CERAMIC,HK CK45(T)
C405	C-M.POLYESTER MMY16
C406	C-M.POLYESTER MMY16
C407	C-ELECTRO. CEO4W(T)
C408	C-ELECTRO. CEO4W(T)
C409	C-POLYPROPYLENECQ922
C410	C-M.POLYESTER MMY16
C411	C-ELECTRO. CEO4W(T)10
C412	C-CERAMIC,HK CK45(T) 8
C413	C-POLYPROPYLENE CQ92
C414	C-POLYPROPYLENE CQ92
C415	C-POLYPROPYLENE CQ92
C416	C-ELEC 105'C CE04W 35
C417	C-M.POLYPROPYLENE CF9
C419	C-ELECTRO. CEO4W 50
C420	C-ELECTRO. CE04W 160
C421	C-M POLYESTER MMY16
C422	C-ELECTRO. CEO4W(T) 2
C423	C-ELECTRO CEO4W(T) 5
C424	C-M.POLYESTER MMY16
C425	C-M POLYESTER MMY16

AMSUNG

S BUT PICTURE DOES NOT APPEAR

onnector CON702(pin 5) on the video PCB ?

NO

Check the power supply circuits

t
?

Check the signal cable or confirm the PC.

C601,and IC701 ?

Check the video input circuits.
(IC501,IC601,IC701,Q501,Q601,Q701
Q502,Q602,Q702)

C601,and IC701 ?

Check IC501,IC601,and IC701.

?

Check the video output circuits.
(Q503,Q504,Q505,Q506,Q603,Q604
Q605,Q606,Q703,Q704,Q705,Q706)

ECIFIC COLOR APPEARS

raster is colored
reen or magenta.

The raster is colored
in blue or yellow.

ck the green video
its.
01,Q601-Q606)

Check the blue video
circuits.
(IC701,Q701-Q706)

CD-1458VB.
CVB-458*
CVB-4580.
CVB-4581.
CVB-4582.
CVB-4583.
CVB-4584.
CVB-4585.
CVB-4586.
CVB-4587.
CVB-4588.
CVB-4589.

For Service Manuals
contact
MAURITRON SERVICES
8 Cherry Tree Road, Chinnor
Oxfordshire, OX9 4QY.
Tel (01844) 351694
Fax (01844) 352554

VERTICAL LINE ON RASTER

Does 20V appear at the pin 9 of IC301 ?

YES

NO

Check the power supply circuits.

Does output pulse of 28Vp-p appear at the pin 6 of IC301 ?

YES

NO

Check IC204 and its related circuits

Replace IC301 or check its related circuits.

HORIZONTAL LINE ON RASTER

Does 12V appear at pin 1 and 2 of IC401 ?

YES

NO

Does drive pulse appear at
the pin 3 of IC401 ?

Check the power supply circuits
or replace IC902.

YES

NO

Replace IC401 or check its related circuits.

Check flyback pulse at the collector of Q402,
if not correct,replace Q401,Q402 and T401 or check its related circuits.

AMIC,HK	CK45(T) F 50V 0.1M-Z
CTRO.	CEO4W 25V 220M RM/RX
AMIC,HK	CK45(T) F 50V 0.1M-Z
CTRO.	CDO4W(T) 25V 100M
AMIC,HK	CK45(T) E 500V 1000-P
OLYESTER	MMY168(T) 100V 0.1-K
OLYESTER	MMY168(T) 63V 0.01M-J
CTRO.	CEO4W(T) 50V 10M
CTRO.	CEO4W(T) 50V 4.7M
YPROPYLENE	CQ922M(T) 100V 0.0047M-J
OLYESTER	MMY168(T) 63V 0.1M-J
CTRO.	CEO4W(T)100V10M 105'C RA/KM
AMIC,HK	CK45(T) B 500V 4700-K
YPROPYLENE	CQ922M 1.6KV 0.0057M
YPROPYLENE	CQ922M 200V 0.1M-K
YPROPYLENE	CQ922M 630V 0.015M-K
C 105'C	CE04W 35V 100UF RA/KM
OLYPROPYLENE	CF922M 400V 1.0M-J
CTRO.	CEO4W 50V 1000UF(16X25)
CTRO.	CE04W 160V 100UF 105'C
OLYESTER	MMY168(T) 63V 0.1M-J
CTRO.	CEO4W(T) 25V 10M
CTRO	CEO4W(T) 50V 4.7M
OLYESTER	MMY168(T) 63V 0.1M-J
OLYESTER	MMY168(T) 63V 0.1M-J

C503	C-ELECTRO. CEO4W(T) 50V 47M
C504	C-CERAMIC,TEMP CC45(T) CH 50V 150-J
C505	C-ELECTRO. CE04W 160V 1UF 105,C
C506	C-ELECTRO. 105'C CE04W9(T) 160V 1UF
C507	C-ELECTRO. CEO4W(T) 50V 10M 105'C
C508	C-CERAMIC,TEMP CC45(T) CH 50V 33-J
C509	C-CERAMIC,TEMP CC45(SL500V 6PF-D
C601	C-CERAMIC,HK CK45(T) F50V 0.1M-Z
C602	C-SEMI,CONDUC. CGF1E224Z10EFK(T)
C603	C-ELECTRO. CEO4W(T) 50V 47M
C604	C-CERAMIC,TEMP CC45(T) CH 50V 150-J
C605	C-ELECTRO. 105'C CEO4W9(T) 160 1UF
C606	C-ELECTRO. 105'C CEO4W9T 160 1UH
C607	C-ELECTRO. CEO4W(T) 50V 10M 105'C
C608	C-CERAMIC,TEMP CC45(T) CH 50V 33-J
C701	C-CERAMIC,HK CK45(T) F50V 0.1M-Z
C702	C-SEMI,CONDUC. CGF1E224Z10EFK(T)
C703	C-ELECTRO. CE04W(T) 50V 47M
C704	C-CERAMIC,TEMP CC45(T) CH 50V 150-J
C706	C-ELECTRO. 105'C CEO4W9T 610 1UF
C707	C-ELECTRO. CEO4W(T) 50V 10M 105'C
C708	C-CERAMIC,TEMP CC45(T) CH 50V 33-J
C801	C-ELECTRO. CE04W 160V 10M
C803	C-ELECTRO. CEO4W(T) 25V 100M
C805	C-ELECTRO. CE04W 250V 10M
C806	C-ELECTRO. CDO4W(T) 50V 10M

C810	C-CERAMIC,HK DE1210BN2K 100-K
C811	C-ELECTRO. CEO4W 16V 47M
C812	C-ELECTRO. CDO4W(T) 50V 10M
C901	C-M,PAPER PME271M 610(0.1UF)
	C-M,PAPER;PHE 800MF 7100K 1.0UF
C902	C-CERAMIC,AC DE 7100F 222MVAI
C903	C-CERAMIC,AC DE 7100F 222MVAI
C904	C-M.POLYESTER,AC CQS 922M 250V 0.22M-M
	C-M,PAPER ; PME271M 647 (0.47UF)
C905	C-CERAMIC,AC CKS45 B 250V 2200P-Z
C906	C-CERAMIC,AC CKS45 B 250V 2200P-Z
C907	C-CERAMIC,AC CKS45 B 250V 2200P-Z
C908	C-ELECTRO. 250V 680UH HM (30X45)
	C-ELECTROLYTIC ; 400V 330UF (30X50),NM
C909	C-CERAMIC,HK CK45(T) B 500V 4700-K
C910	C-M.POLYESTER CF922M 100V 0.47M-J
C911	C-M.POLYESTER,AC CQS 922M 250V 0.22M-M
C912	C-CERAMIC,AC DE 7100F 222MVAI
C913	C-M.POLYESTER CF922 100V 0.1M-J
C914	C-CERAMIC,AC DE 7100F 222MVAI
C915	C-ELECTRO. CE04W(T) 100V 10M 105'C
C919	C-CERAMIC,HK DE7150F 472M VA-1-VC
C920	C-CERAMIC,HK DE7150F 472M VA-1-VC
C922	C-ELEC 105'C 35V 1000UH KM
C924	C-ELECTRO. CEO4W 16V 2200M
C925	C-ELECTRO. CEO4W100V 68M 015C RX

C931	C-CERAMIC,HK CK45(T) B 500V 330-K
C933	C-CERAMIC,HK CK45(T) B 500V 330-K
C934	C-CERAMIC,HK CK45(T) B1KV 100K
S/C	SIGNAL-CABLE ASSY : CVB458*
P/C	POWER-CORD,ASSY (108 ~ 132V:REGION)
	POWER-CORD,ASSY (198 ~ 242V:REGION)
	POWER-CORD,ASSY (198 ~ 242V:REGION)
	POWER-CORD,ASSY (198 ~ 242V:REGION)
	POWER-CORD,ASSY (198 ~ 242V:REGION)
CRT	CRT-COLOR:M34JUQ23XX216 0.28(NEC)
	CRT-COLOR:E8253B22-TC99ETH 0.28(TOSHIBA)
	CRT-COLOR:M34KAM00X07(J) 0.28(HITACHI)
	CRT-CLOLOR:37SGA24X-TC 0.28 (SED)
	CRT-COLOR:M34JCA30X15 0.31 (HITACHI)
P/S	SWITCH-PUSH:ESB90702V(198 ~ 242V:REGION)
	SWITCH-PUSH:ESB8213V(108 ~ 132V:REGION)
PCB	PCB-MAIN:245 x245 xT1.6(108 ~ 132V:REGION)
	PCB-MAIN:245 x245 xT1.6(199 ~ 242V:REGION)
	GROUND CRT ASSY
	CONN-VERTICAL ASSY:JST VHR-2N(310)
	CONN-HORIZONTAL ASSY:JST VHR(310)
	VR-ROUND 18SN 15F B5K
	VR-ROUND 18SN F25 B5K(TAP)
	CONNECTOR-6P ASSY

SAMSUNG

WAVEFORMS(CVB458*)

CHECK CONDITION; The voltage level waveforms at each point are given below on 120VAC when this set is connected to a personal system II with the video signal input of the full white pattern.

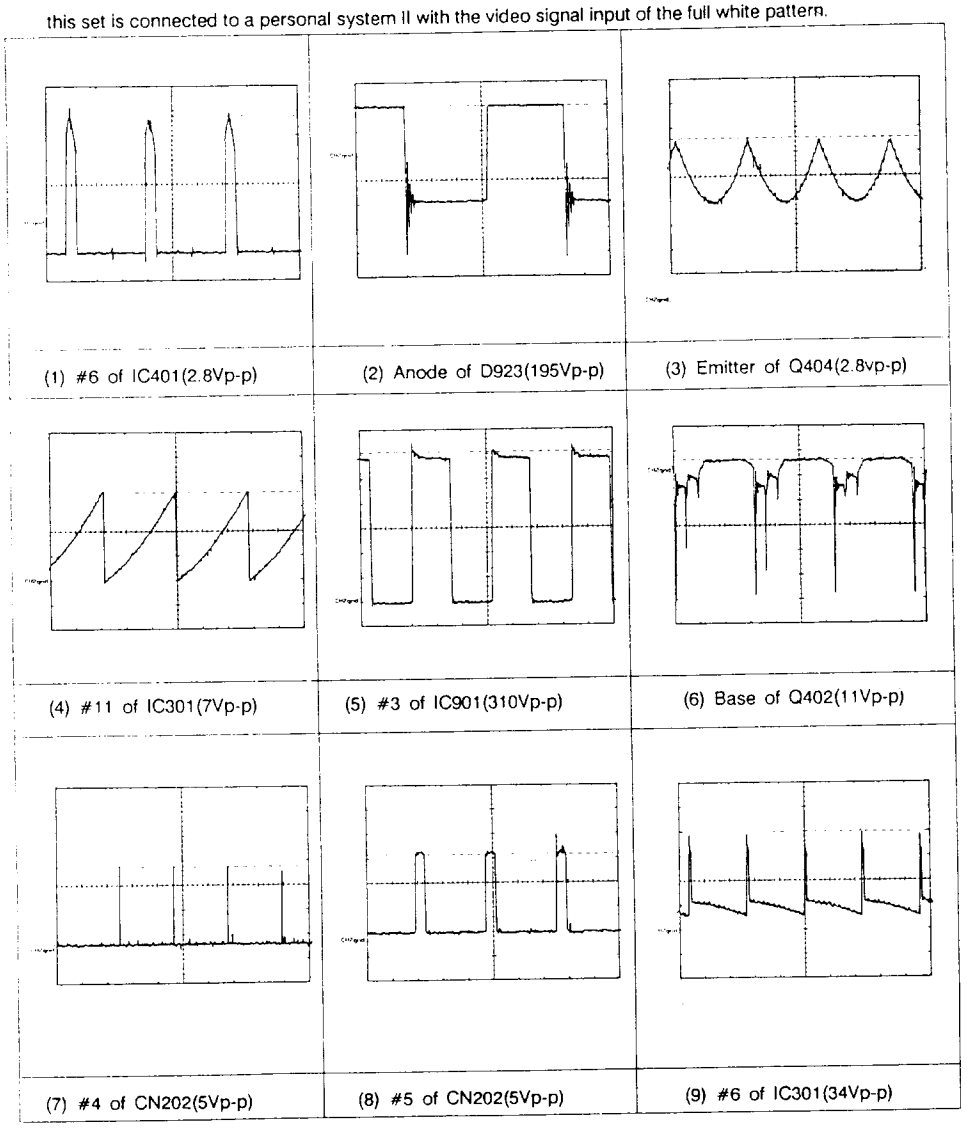

(1) #6 of IC401(2.8Vp-p) (2) Anode of D923(195Vp-p) (3) Emitter of Q404(2.8vp-p)

(4) #11 of IC301(7Vp-p) (5) #3 of IC901(310Vp-p) (6) Base of Q402(11Vp-p)

(7) #4 of CN202(5Vp-p) (8) #5 of CN202(5Vp-p) (9) #6 of IC301(34Vp-p)

CD-1458VB.
CVB-458*
CVB-4580.
CVB-4581.
CVB-4582.
CVB-4583.
CVB-4584.
CVB-4585.
CVB-4586.
CVB-4587.
CVB-4588.
CVB-4589.

For Service Manuals contact
MAURITRON SERVICES
8 Cherry Tree Road, Chinnor
Oxfordshire, OX9 4QY.
Tel (01844) 351694
Fax (01844) 352554

VERTICAL DEFLECTION CIRCUIT

Vertical deflection circuit is composed of IC204(MC14052BCP),IC301(TDA2653A) and its related circuits.The vertical sync signal(only positive pulse) is applied to pin 2 of IC301.
The frequency of the oscillator is controlled by the voltage of pin1 which can be varied by vertical frequency VR(VR301).
The sawtooth signal is fed via a buffer stage to pin 3 of IC301.this signal is used for linearity control(VR302) and drive of the preamplifier(pin 4).

RESOLUTION	H-SYNC	V-SYNC
720 X 350	POSITIVE	NEGATIVE
720 X 400	NEGATIVE	POSITIVE
680 X 480	NEGATIVE	NEGATIVE
1024 x768	POSITIVE	POSITVE
800 X 600	ANY	ANY

Table 1. TRUTH TAE

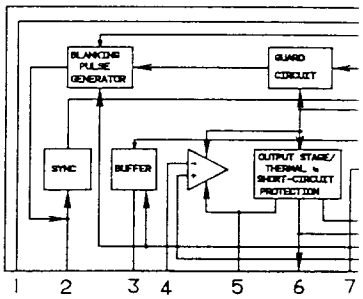

Figure 2. BLOCK-DIAGRAM (

10. HORIZONTAL LINEARITY ADJUSTMENT

Adjust the horizontal linearity control(L401) until the horizontal linearity is best.

11. VERTICAL LINEARITY ADJUSTMENT

Adjust the vertical linearity control(VR302) until the vertical linearity is best.

12. HORIZONTAL CENTERING ADJUSTMENT

Adjust VR404 until the horizontal center is set at screen center. (Horizontal centering tolerance is +/- 3 mm)

13. VERTICAL CENTERING ADJUSTMENT

Adjust VR303 until the vertical center is set at screen center. (Vertical centering tolerance is +/- 2.5 mm)

14. WIDTH ADJUSTMENT

(1)VGA
Adjust the horizontal size VR(VR402) so that the horizontal size of displayed pattern is 240 mm.(Tolerance : +/-4 mm)
(2)EVGA and SVGA
Adjust the horizontal size VR(VR403)so that the horizontal size of displayed pattern is 244mm(Tolerance : +/-4mm)

15. VERTICAL SIZE ADJUSTMENT

Adjust the vertical size control(VR304) so that the vertical size of displayed pattern is 180 mm.(VGA) and 183mm(EVGA/SVGA)(Tolerance : +/-4mm)

16.SCREEN ADJUSTMENT

Operate the monitor to display the full white pattern on screen.

DEFLECTION CIRCUIT

Deflection circuit is composed of (BCP) IC301(TDA2653A) and its re- the vertical sync signal(only positive ied to pin 2 of IC301. of the oscillator is controlled by the which can be varied by vertical (VR301). signal is fed via a buffer stage to pin this signal is used for linearity con- and drive of the preamplifier(pin 4).

An electrolytic capacitor(C305) between pin 7 and pin 5,and a diode(D302) between pin 5 and pin 9 should be connected for proper operation of the flyback generator.
The vertical deflection coil is connected to pin 6 of IC301.
The pin 8 of IC301 is negative supply(ground) and the pin 9 of IC301 is positive supply(20V)
The supply voltage at pin9 is used to supply the flyback generator, voltage stabilizer, blanking pulse generator and buffer stage in IC301.

HORIZONTAL DRIVE CIRCUIT

TION	H-SYNC	V-SYNC	CONTROL LEVEL (IC301)		ON SWITCH (IC301)	
			PIN9	PIN10		
50)	POSITIVE	NEGATIVE	H	L	2-3	15-13
00)	NEGATIVE	POSITIVE	L	H	5-3	14-13
00)	NEGATIVE	NEGATIVE	L	L	4-3	11-13
00)	POSITIVE	POSITVE	L	L	1-3	12-13
00)	ANY	ANY	H	H	3-3(IC205)	1-13(IC205)

Table 1. TRUTH TABLE OF IC204

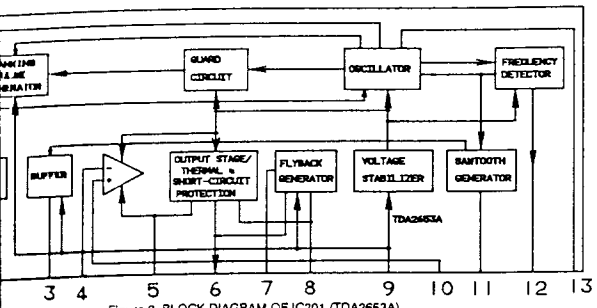

Figure 2. BLOCK-DIAGRAM OF IC301 (TDA2653A)

The horizontal sync signal is applied to pin 9 of IC401.

The output from the flyback transformer (T402) is integrated and connected to pin 6 of IC401. The horizontal oscillation frequency are controlled by H-frequency VR(VR402) connected to pin 15,and horizontal phase is controlled by H-phase VR(VR406) connected to pin 5.
The pulse switching mode between drive and output stage is a reverse polarity type; that is when the transistor Q401 is ON,the output transistor Q402 is OFF.

Horizontal drive voltage developed at pin 3 of the horizontal integrated circuit (IC401) is applied through the horizontal drive stage(Q401) and drive transformer(T401).
The horizontal output circuit generates the horizontal scan and high voltage to be applied to the picture tube. The function of horizontal output stage(Q402) is to serve as a switch for the horizontal output circuits. The high voltage required to the anode of the picture tube is generated by boosting the pulse from the collector of the Q402 through T402 during the flyback(retrace) period and applying this boosted pulse to a series of silicon rectifiers. The high voltage regulation is accomplished internally in T402(FBT).

HORIZONTAL OUTPUT CIRCUIT

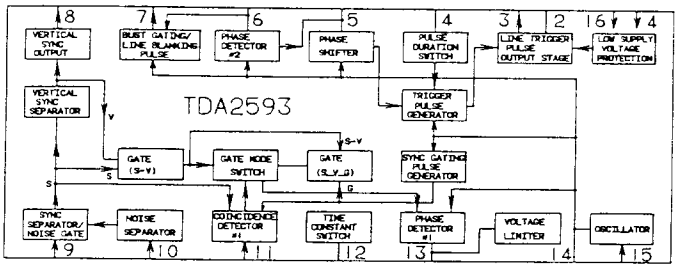

Figure 3. BLOCK-DIAGRAM OF IC401 (TDA2953A)

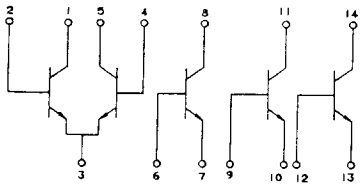

Figure 4.BLOCK-DIAGRAM OF IC501,601,701 (CA3046)

For Service Manuals contact
MAURITRON SERVICES
8 Cherry Tree Road, Chinnor
Oxfordshire, OX9 4QY.
Tel (01844) 351694
Fax (01844) 352554

HORIZONTAL LINEARITY ADJUSTMENT

the horizontal linearity control(L401) until the ntal linearity is best.

VERTICAL LINEARITY ADJUSTMENT

the vertical linearity control(VR302) until the linearity is best.

HORIZONTAL CENTERING ADJUSTMENT

VR404 until the horizontal center is set at center. (Horizontal centering tolerance is +/- .

VERTICAL CENTERING ADJUSTMENT

VR303 until the vertical center is set at screen (Vertical centering tolerance is +/- 2.5 mm)

WIDTH ADJUSTMENT

A
just the horizontal size VR(VR402) so that the rizontal size of displayed pattern is 240 m (Tolerance : +/-4 mm)
3A and SVGA
just the horizontal size VR(VR403)so that the rizontal size of displayed pattern is mm(Tolerance : +/-4mm)

VERTICAL SIZE ADJUSTMENT

the vertical size control(VR304) so that the size of displayed pattern is 180 mm.(VGA) mm(EVGA/SVGA)(Tolerance : +/-4mm)

SCREEN ADJUSTMENT

the monitor to display the full white pattern en

Adjust screen VR(in FBT) so that back raster appears at brightness and contrast VR max, but disappears at brightness VR center(detent position) and contrast VR max.

17. WHITE BALANCE ADJUSTMENT

(Instrument in use : oscilloscope,scope probe)

(1) Operate the computer to display the full white 50mm square patch centered on the screen.
(2) Set the brightness control to the mechanical center of VR (detent position).
(3) Set the contrast control to the max position(fully clockwise) of VR.
(4) Connect the minus pole of the probe to the lead of chassis GND and plus pole to the lead of R516.
Adjust VR501(R-GAIN) so that the video gain on the scope is 40Vp-p.
(5) Connect the plus pole of the probe to the lead of R616.
Adjust VR601(G-GAIN) so that the video gain on the scope is 40Vp-p.
(6) Connect the plus pole of the probe to the lead of R716.
Adjust VR701(B-GAIN) so that the video gain on the scope is 40Vp-p.
(7) Adjust the contrast control so that the brightness is 3F/L.
(8) Rotate VR502,VR602,and VR702 for the display color to be white.
(Use the color analyzer; X = 0.281 +/- 0.03, Y = 0.311 +/- 0.03)
(9) Adjust the contrast control so that the brightness is 20F/L.
(10) Rotate slightly VR501,VR601,and VR701 for the display color to be white.
(11) Recheck color coordinates at 3F/L brightness and confirm the white color with rotating the contrast control.
(12) Check whether the brightness is more than 25F/L at brightness and contrast VR max.
If the brightness is less than 25F/L,rotate screen VR(in FBT) so that back raster appears at brightness and contrast VR max,but disappears at brightness VR center(detent position) and contrast VR max.

18. CRT TILT ADJUSTMENT

Adjust the CRT with fastening screws so that the dimension A and B are separately equal.

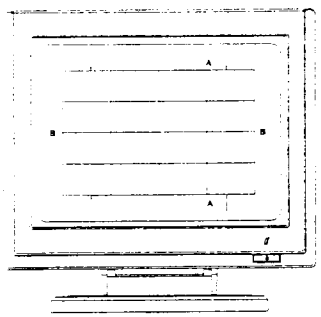

19. STATIC(CENTER) CONVERGENCE

Switch the monitor ON and warm up for 15 minutes. Operate the computer in such a way that the cross hatch pattern is displayed on screen.
Convergence error should not be over 0.45 mm in corner, 0.3mm in center for CVB4587.
(CVB4581 ; center:0.3mm/corner:0.5mm))
Proceed as follows.
(1) Locate the pair of four pole magnet rings.
(2) Rotate the individual rings (change spacing between tabs) to converge the vertical red and blue lines.
(3) Rotate the pair of rings (maintaining spacing between tabs) to converge the horizontal red and blue lines.
(4) After completing the red and blue center convergence, locate the pair of six pole magnet ring.
(5) Rotate the individual rings (change spacing between tabs) to converge the vertical red and blue (magenta) and green lines.
(6) Rotate the pair of rings (maintaining spacing between tabs) to converge the horizontal red and blue (magenta) and green lines.
Refer to figure on pages 15 and 16.
(7) Magnet position
NEC(CRT maker) : 2pole/4pole/6pole(from the front of CDT)
HITACHI and TOSHIBA(CRT maker) : 4pole/6pole/2pole(from the front of CDT)
(8) Don't rotate the 2pole magnet because it's object is to adjust the purity.

20 . DYNAMIC CONVERGENCE

Dynamic convergence (convergence of the three color fields at the edge of the CRT screen) is accomplished by the proper insertion and positioning of the three wedges between the edge of deflection yoke and the funnel of the CRT.

For Service Manuals contact
MAURITRON SERVICES
8 Cherry Tree Road, Chinnor
Oxfordshire, OX9 4QY.
Tel (01844) 351694
Fax (01844) 352554

WIRING DIAGRAM AND PARTS LOCATION

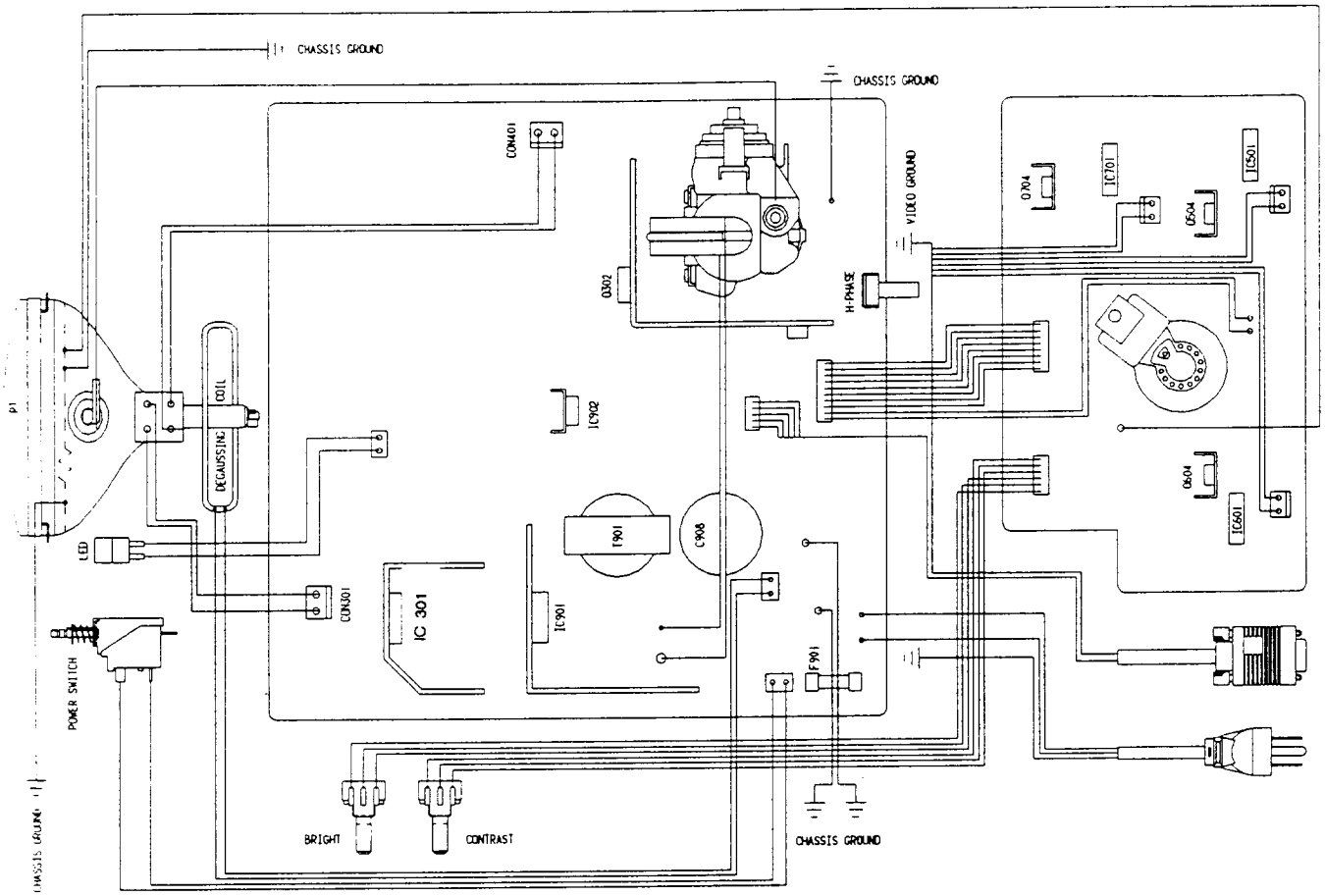

THEORY OF OPERATION

GENERAL

CVB4587 is a high resolution 14inch SVGA compatible color monitor using a 0.28 dot pitch non-glare CRT(CVB4581,0.31 non-glare CRT).
It uses R,G,B analog input signals and separate(TTL) sync signals.
It can operate in 350,400 ,480,600 and 768 line mode.
The switching is automatic and irrespective of on the polarity of horizontal and vertical sync.

POWER CIRCUIT

The power supply circuit is a synchronizing type switching power circuit and substantially consists of the rectifier/smoother, synchronizing, control and output rectifier/smoother circuits.
The AC voltage is full wave rectified by the rectifier smoother circuit and then changed on the smoothing capacitor as a DC voltage.
When the power is turned ON,a small current flows to the base of output transistor (included in IC901) via the start up resistor (R905),as a result,the collector current flows through the primary windings pin 4 and pin 3 of the converter transformer(T901),which produces an electromagnetic force between those windings, resulting in a voltage induced between the driving windings pin 7 and pin 6 of the transformer.
The induced voltage is positively fedback to the base of the output transistor (Q1) to increase the base current of this transistor, resulting in a further increase in thecollector current.
The above operation occurs instantaneously to impress sufficient base current on Q1.
The synchronization is done by the pulse induced at the core of FBT(T402).
The horizontal trigger for synchronization is put into the base of Q1,making the oscillation frequency of IC901 same as the H-frequency.
The control circuit always applies to the error amplifier circuit a voltage induced in the detecting winding situated at the primary side of the convertor transformer.
The small signal transistor (Q901) and detecting resistor (R907) protect IC901 from surge current which may be caused by power ON/OFF and output short circuit.

IMPORTANT : When replacing the power supply chassis,make sure that the ground wire (green) of power cord is properly attached to the main chassis frame as closely as possible.
When replacing the fuse,make sure that the fuse is the same type and rating as the original.

MODE DETECTING CIRCUIT

This monitor has 5 different resolution modes irrespective of the polarity of sync signal.
Mode detecting circuit is composed of IC201,IC202 IC204 and its related circuits.
IC201 is an EXCLUSIVE-OR gate and IC204 is a digitally controlled analog switch
For detailed information refer to table1.

CD-1458VB.
CVB-458*
CVB-4580.
CVB-4581.
CVB-4582.
CVB-4583.
CVB-4584.
CVB-4585.
CVB-4586.
CVB-4587.
CVB-4588.
CVB-4589.

For Service Manuals contact
MAURITRON SERVICES
8 Cherry Tree Road, Chinnor
Oxfordshire, OX9 4QY.
Tel (01844) 351694
Fax (01844) 352554

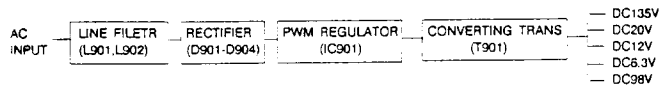

Figure 1. BLOCK-DIAGRAM OF SMPS

SAMSUNG

SPECIFICATIONS

DESCRIPTION	NOMINAL	REMARK
1. Power input	AC108-132V 60Hz AC220-240 VAC, 50 Hz	
2. Power consumption	65W	MAX. 80W
3. Input signal a)Video b)Sync	 R,G,B Analog separate Mode 1 : H:positive V:negative Mode 2 : H:negative V:positive Mode 3 : H:negative V:negative Mode 4 : H:positive V:positive Mode 5 : H:any V:any	 TTL Level
4. Frequency a)Horizontal b)Vertical	 31.5 / 35.5KHz 56/60/70Hz(Non-interlace) 43.3Hz(Interlace)	
5. CRT	14" 90° deflection non-glare 0.31 dot pitch 14" 90° deflection non-glare 0.28 dot pitch	CVB4581 CVB4587
6. Resolution	Mode 1 : 720 dots X 350 lines Mode 2 : 720 dots X 400 lines Mode 3 : 640 dots X 480 lines Mode 4 : 1024 dots X 768 lines Mode 5 : 800 dots X 600 lines	
7. Display size	9 9/20" X 7 1/12" (240 X 180 mm +/-4) (244 X 183 mm +/-4)	VGA EVGA AND SVGA
8. Dimensions(W X H X D)	430 X 385 X 460 mm with stand 357 X 386 X 419 mm without stand	
9. Weight	13.2Kg with stand 12.7Kg without stand	

NOTICE : 1. This service manual comprises 120V and 220/240V version.
2. Nominal specs represent the design specs; all units should be able to, these-some will exceed and some may drop slightly below these specs.
Limit specs represent the absolute worst condition that still might be considered acceptable; in no case should a unit perform to less than any limit specs.

A. ALIGNMENT OF (R) AND (B) WITH THE 4-POLE MAGNET

Moable in spread condition

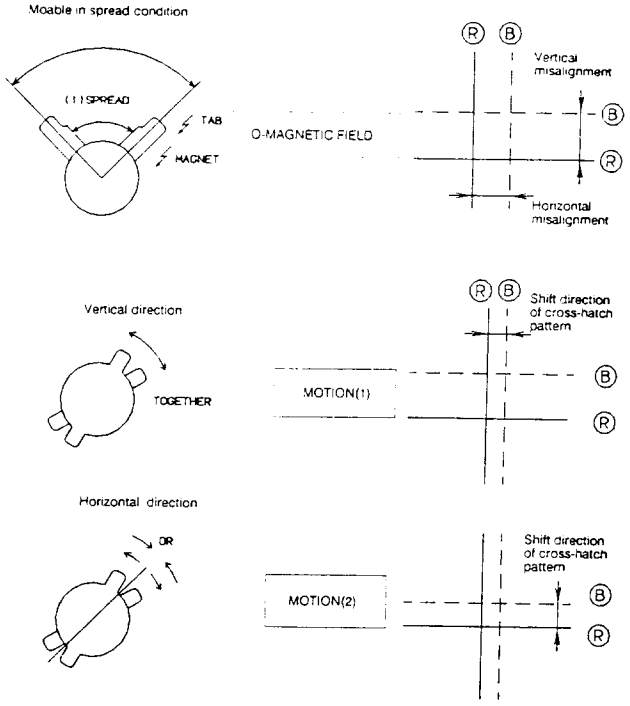

B. ALIGNMENT OF (R) AND (B) WITH (G)(6-POLE MAGNET)

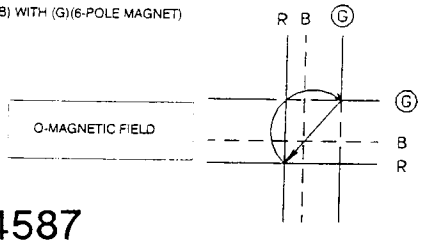

BLOCK DIAGRAM OF CVB4587

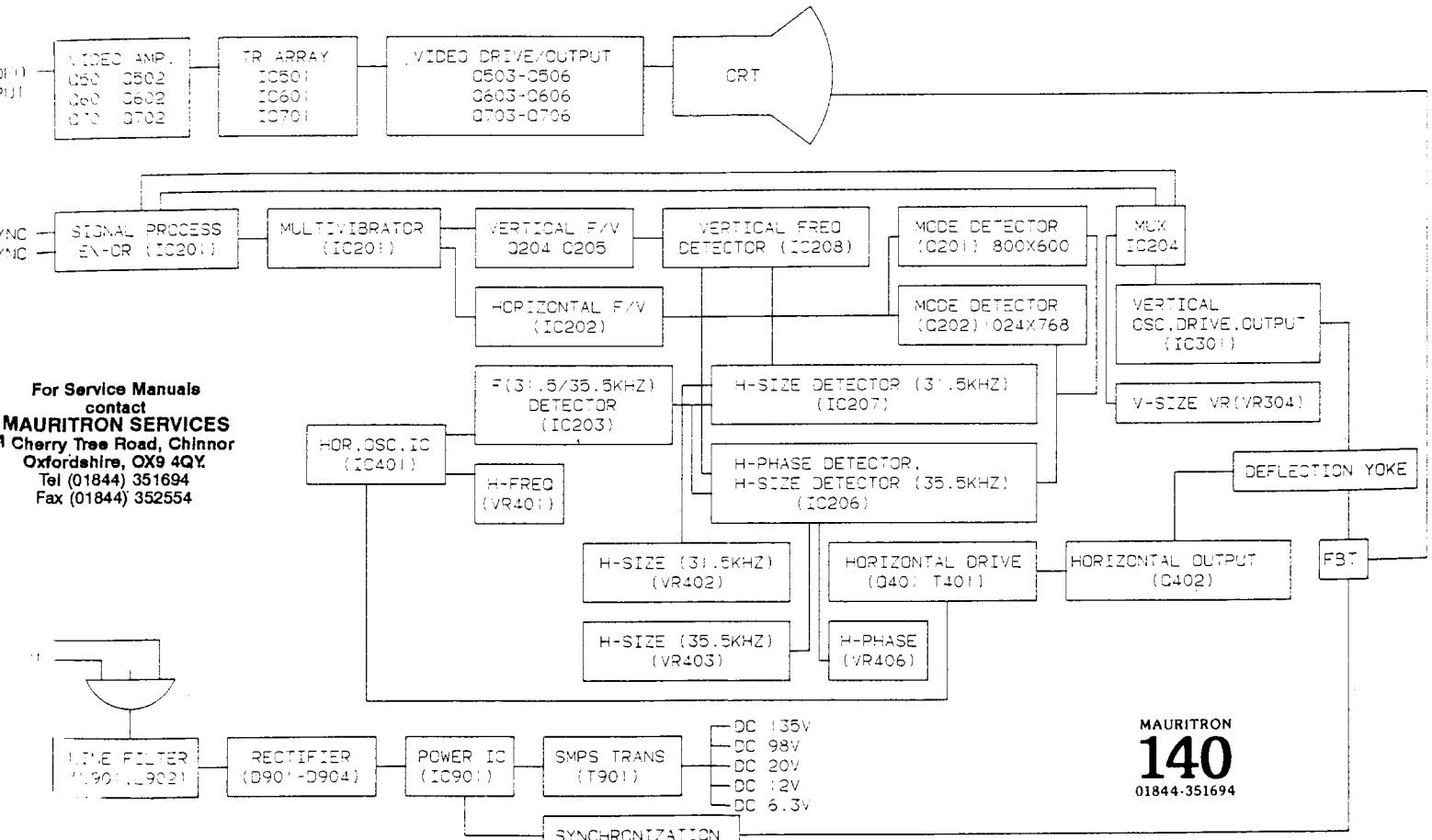

For Service Manuals contact
MAURITRON SERVICES
1 Cherry Tree Road, Chinnor
Oxfordshire, OX9 4QY.
Tel (01844) 351694
Fax (01844) 352554

SAMSU

For Service Manuals
contact
MAURITRON SERVICES
8 Cherry Tree Road, Chinnor
Oxfordshire, OX9 4QY.
Tel (01844) 351694
Fax (01844) 352554

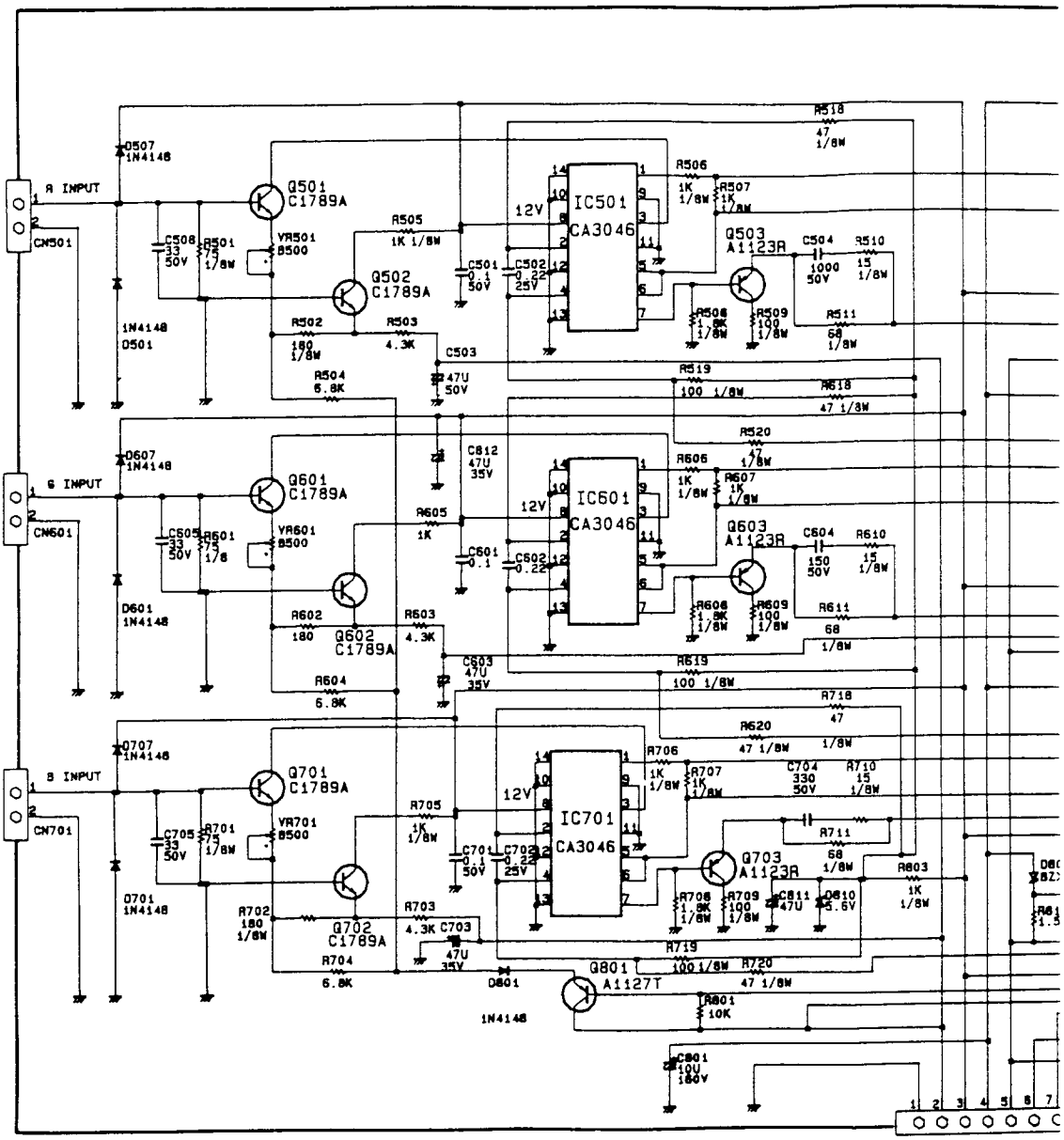

SIGNAL INFORMATION

PIN NO	CONNECT	REMARK
1	CON701-4	R
2	CON701-2	G
3	CON701-6	B
4		
5	CN202-3	SELFTEST
6	CON701-3	R-GND
7	CON701-1	G-GND
8	CON701-5	B-GND
9		
10	CN202-2	GND
11	CN202-2	GND
12		
13	CN202-5	H-SYNC
14	CN202-4	V-SYNC
15		

For Service Manuals
contact
MAURITRON SERVICES
8 Cherry Tree Road, Chinnor
Oxfordshire, OX9 4QY.
Tel (01844) 351694
Fax (01844) 352554

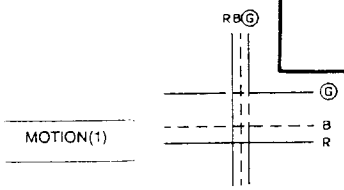

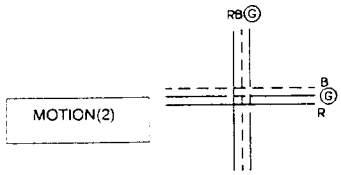

For Service Manuals
contact
MAURITRON SERVICES
8 Cherry Tree Road, Chinnor
Oxfordshire, OX9 4QY.
Tel (01844) 351694
Fax (01844) 352554

Convergence Punty Magnet

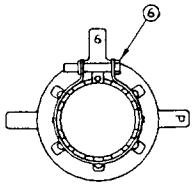

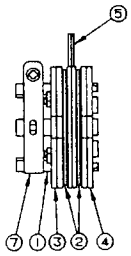

NEC
1. Holder
2. Space
3. Purity
4. 6pole magnet
5. 4pole magnet
6. Setup bolt
7. Band

HITATCHI / TOSHIBA
1. Holder
2. Space
3. 4pole magnet
4. Purity
5. 6pole magnet
6. Setup bolt
7. Band

VIDEO CIRCUIT

The R,G,B analog signals are applied to Q501,Q601 and Q701. The collectors of these transistors are then connected to pin 3 of IC501,IC601,IC701 which is used as differential amplifier and buffer.
The output of IC501,IC601 and IC701 is applied to to the video output stage(Q503, Q504, Q603, Q604 Q703, Q704). Q505, Q506, Q605, Q606, Q705 and Q706 are buffers which are used to reduce transmission loss of the video signal to the cathode of CRT.
The R,G,B output signals are provided to the cathode of CRT.
The R,G,B output gains are controlled respectively by VR501,VR601 and VR701.
The R,G,B cutoff voltages are controlled respectively by VR502,VR602 and VR702.

SIGNAL CABLE INPUT CONNECTION

The connection which interfaces with the IBM PS/2 is a sub-miniature 15pin D-shell connection.

PIN NO	FUNCTION
1	RED
2	GREEN
3	BLUE
4	DIGITAL GND
5	SELF RASTER
6	RED RETURN
7	GREEN RETURN
8	BLUE RETURN
9	N/C
10	DIGITAL GND
11	DIGITAL GND
12	DIGITAL GND
13	H-SYNC
14	V-SYNC
15	DIGITAL GND

N/C means no connection

AMSUNG

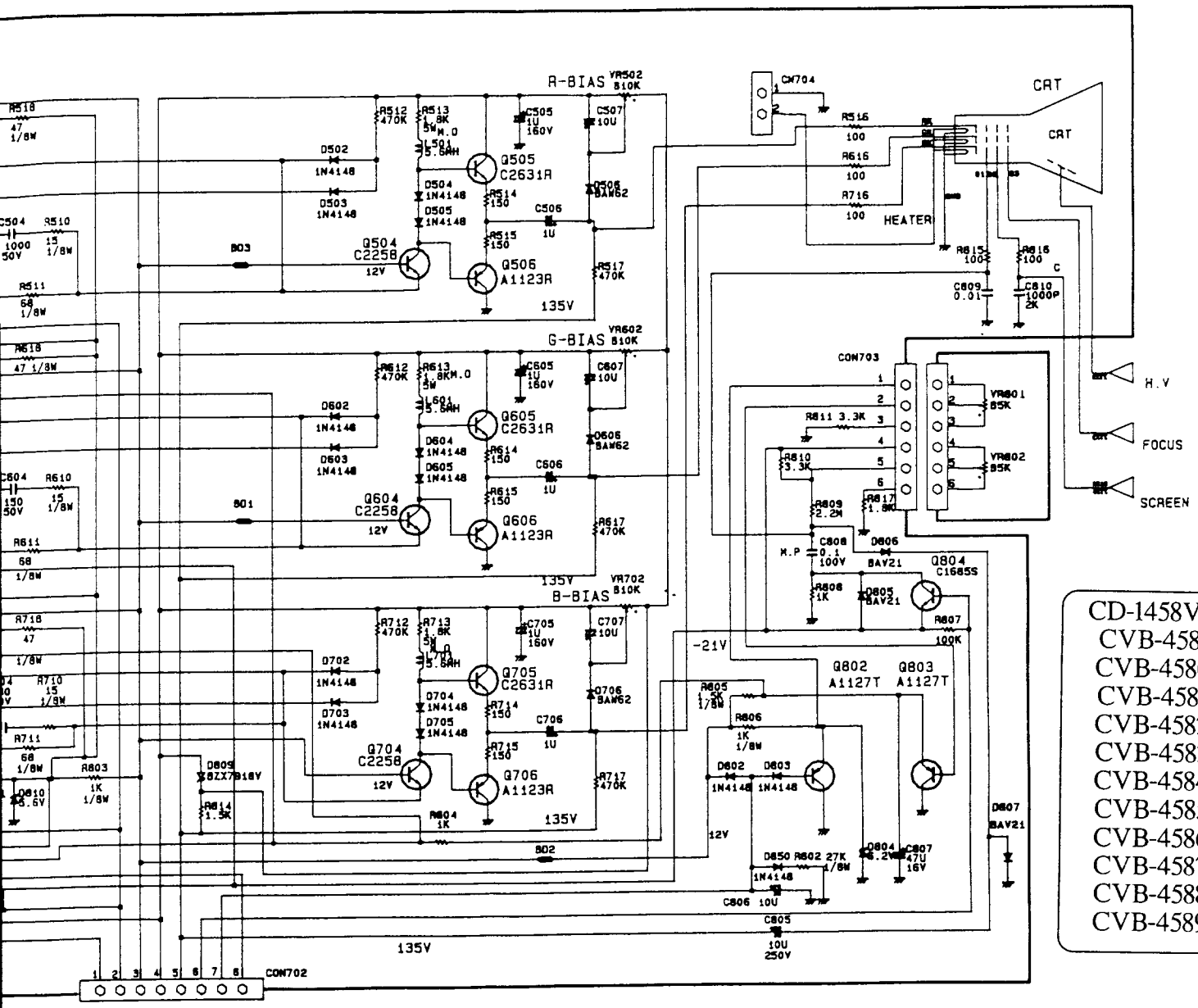

CD-1458VB.
CVB-458*
CVB-4580.
CVB-4581.
CVB-4582.
CVB-4583.
CVB-4584.
CVB-4585.
CVB-4586.
CVB-4587.
CVB-4588.
CVB-4589.

PIN NO	FUNCTION
1	RED
2	GREEN
3	BLUE
4	DIGITAL GND
5	SELF RASTER
6	RED RETURN
7	GREEN RETURN
8	BLUE RETURN
9	N/C
10	DIGITAL GND
11	DIGITAL GND
12	DIGITAL GND
13	H-SYNC
14	V-SYNC
15	DIGITAL GND

N/C means no connection

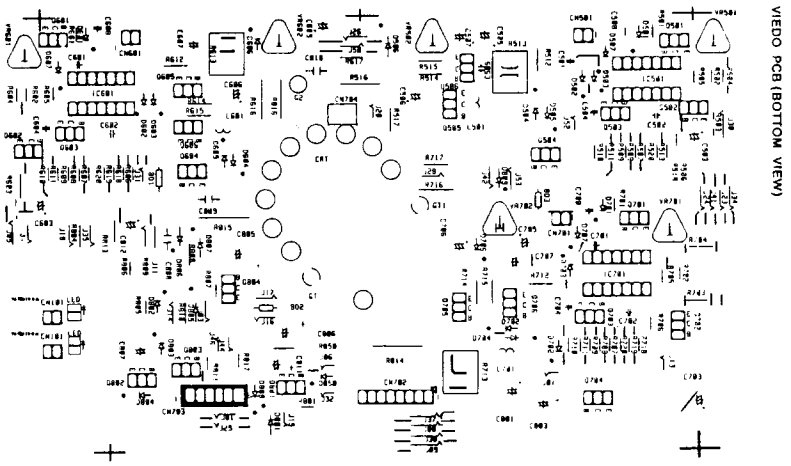

VIDEO PCB (BOTTOM VIEW)

WARNING : BEFORE SERVICING THIS CHASSIS, READ X-RAY RADIATION PRECAUTION, "SAFETY PRECAUTION," PRODUCT SAFETY NOTICE."

CAUTION

1. THE SHADED AREAS AND ⚠ MARKS IN THE SCHEMATIC DIAGRAM AND THE PARTS LIST DESIGNATE COMPONENTS WHICH HAVE SPECIAL CHARACTERISTICS IMPORTANT FOR SAFETY AND SHOULD BE REPLACED ONLY WITH TYPES IDENTICAL TO THOSE IN THE ORIGINAL CIRCUIT OR SPECIFIED IN THE PARTS LIST. BEFORE REPLACING ANY OF THESE COMPONENTS, READ CAREFULLY THE "PRODUCT SAFETY NOTICE".
2. DURING A NUMEROUS MEASUREMENT OF THIS MONITOR MATTERS THAT DEMAND SPECIAL ATTENTION IS FOLLOWING
   1) DO NOT USE YOUR INSTRUMENT BETWEEN PRIMARY GROUND (SYMBOL ⏚) AND SECONDARY CIRCUIT.
   2) DO NOT USE YOUR INSTRUMENT BETWEEN SECONDARY GROUND (SYMBOL ⏚) AND PRIMARY CIRCUIT.
3. THE SHADED AREAS IS A PRIMARY SECTION (HOT PART)

AVERTISSMENT : " CE RECEPTEUR EST EQUIPE DE COMPOSANTS CRITIQUES POUR LA SECURITE TOUTESLES PIECES INDIQUEES DAMS LES ZONES OMBREES DU SCHEMA SONT CRITIQUE POUR LA SECURITE POUR MAINTENIR LE DEGRE DE SECURITE DE L'APPAREIL NE REMPLACER LE FABRICANT DONT LE FONCTIONNEMENT EST CRITITE QUE PAR DES PIECES RECOMMANDEES PAR LE FABRICANT CONSULTER LA NOMENCLATURE DES PIECES POUR TROUVER LES PIECES DE RECHANGE EXACTES".

WARNING : "THIS EQUIPMENT CONTAINS SAFETY CRITICAL COMPONENTS ALL PARTS SHOWN IN THE SHAEDE AREAS OF THE SCHEMATIC ARE SAFETY REPLACE SAFETY CRITICAL COMPONENTS ONLY WITH MANUFACTURERS' RECOMMENDED PARTS LIST FOR EXACT REPLACEMENTS."

NOTE

1. RESISTANCE IS SHOWN IN OHM K=1,000 M=1,000,000. RATED POWER OF RESISTOR NOT NOTED IN SCHEMATIC DIAGRAM IS 1/4W.
2. CAPACITANCE IS SHOWN UF AND NOT NOTED CAPACITANCES IS SHOWN PF 1UF=1,000,000PF RATED VOLTAGE OF CONDENCER NOT NOTED IN SCHEMATIC DIAGRAM IS 50V.
3. ABBREVIATION AND SYMBOL

MO :	R-METAL OXIDE	CM:	R-CEMENT
F :	R-FUSIBLE	P:	C-POLYESTOR
C:	R-COMPOSITION	T:	C-TANTALUM
PP:	C-POLYPROPYLENE	⏚ :	HOT GROUND
MP:	METAL POLYESTOR	⏚ :	COLD GROUND

4. THE SECONDARY VOLTAGE IS READ WITH SSVM FROM INDICATED POINT TO COLD GROUND (⏚) THE PRIMARY VOLTAGE IS READ WITH SSVM FROM INDICATED POINT TO HOT GROUND (⏚)
5. THIS SCHEMATIC DIAGRAM IS SUBJECTED TO CHANGE WITHOUT NOTICE FOR FURTHER IMPROVEMENT.

For Service Manuals
contact
MAURITRON SERVICES
8 Cherry-Tree Road, Chinnor
Oxfordshire, OX9 4QY.
Tel (01844) 351694
Fax (01844) 352554

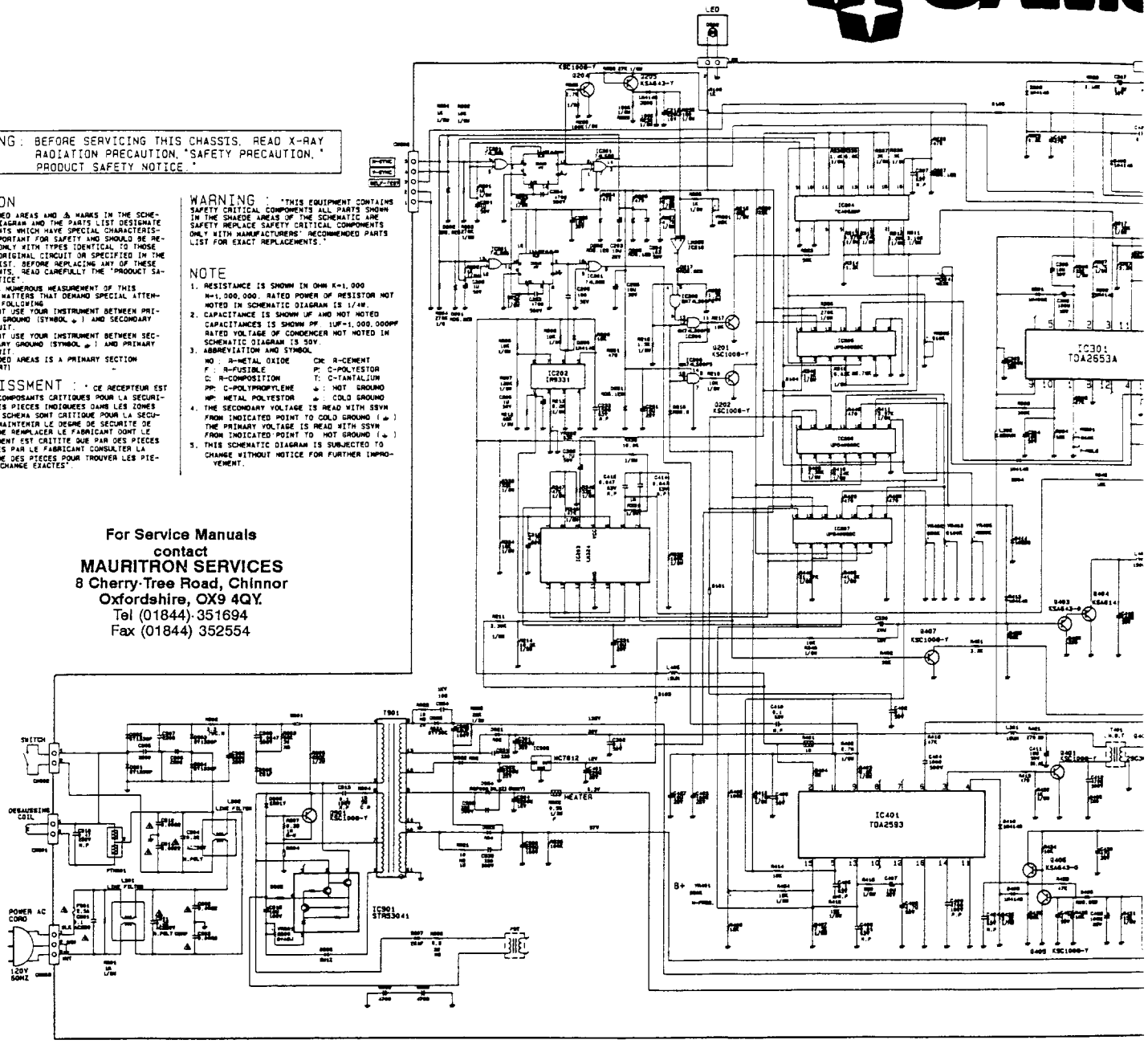

CD-1458VB.
CVB-458*
CVB-4580.
CVB-4581.
CVB-4582.
CVB-4583.
CVB-4584.
CVB-4585.
CVB-4586.
CVB-4587.
CVB-4588.
CVB-4589.

IMPORTANT SERVICE SAFETY PRECAUTIONS

Service work should be performed only by qualified service technicians who are thoroughly familiar with all of the following safety checks and servicing guidelines:

WARNING

1. For continued safety,do not attempt to modify the circuit.
2. Disconnect the AC power before servicing.
3. Semiconductor heat sinks are potential shock hazards when the chassis is operating.

SERVICING THE HIGH VOLTAGE SYSTEM AND PICTURE TUBE

When servicing the high voltage system, remove the static charge by connecting a 10kohm resistor in series with an insulated wire(such as a test probe) between the chassis and the anode lead. (The AC lure cord should be disconnected from the AC outlet.)

1. The picture tube in this display monitor employs integral implosion protection.
2. Replace with a tube of the same type and number for continued safety.
3. Do not lift the picture tube by the neck.
4. Handle the picture tube only when wearing shatter proof goggles and after discharging the high voltage anode completely.

X-RADIATION AND HIGH VOLTAGE LIMITS

1. Be sure all service personnel are aware of the procedures and instructions covering X-radiation. The only potential source of X-ray in a current solidstate display monitor is the tube. However,the picture tube does not emit measurable X-ray radiation if the high voltage is as specified in the "high voltage check" instruction.
   it is only when high voltage is excessive that X-radiation is capable of penetrating the shell of the picture tube,including the lead in glass material. The important precaution is to keep the high voltage below the maximum level specified.
2. It is essential that serviceman have available at all times an accurate high voltage meter. The calibration of this meter should be checked periodically.
3. High voltage should always be kept at the rated value - no higher. Operation at high voltages may cause a failure of the picture tube or high voltage circuitry and,also under certain conditions,may produce radiation in excess of desirable levels.
4. When the high voltage regulator is operating properly there is no possibility of an X-radiation problem.
   Everytime a color chassis is serviced,the brightness should be tested while monitoring the high voltage with a meter to be certain that the high voltage does not exceed the specified value and that it is regulating correctly.
5. Do not use a picture tube other than that specified or make unrecommended circuit modifications to the high voltage circuitry.
6. When troubleshooting taking test measurements on a display monitor with excessively high voltage, avoid being unnecessarily close to the display monitor. Do not operate the display monitor longer than is necessary to locate the cause of excessive voltage.

BEFORE RETURNING THE DISPLAY MONITOR

Fire and Shock Hazard

Before returning the display monitor to the user,perform the following safety checks:

1. Inspect all lead dress to make certain that the leads are not pinched or that hardware is not lodged between the chassis and other metal parts in the display monitor.

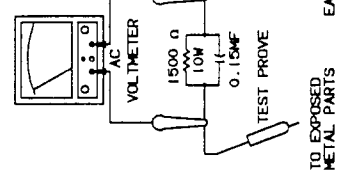

2. Inspect all protective devices such as non-metallic control knobs, insulating materials, cabinet backs, adjustment and compartment covers or shields,isolation resistor-capacitor networks,mechanical insulators,etc.
3. To be sure that no shock hazard exists,checks for leakage current in the following manner:
   - Plug the AC line cord directly into a 120volt AC outlet. (Do not use an isolation transformer for this test)
   - Using two clips leads,connect 1.5 kohm,10 watt resistor paralleled by a 1.5uF capacitor in series with all exposed metal cabinet parts and a known earth ground,such as electrical conduit or electrical ground connected to earth ground.
   - Use a SSVM or VOM with 1000 ohms per-volt or higher sensitivity to measure the AC voltage drop across the resistor (See Figure 1.)
   - Connect the resistor to all exposed metal parts having a return path to the chassis (metal cabinet, screw heads, knobs and shafts, escutcheon, etc.) and measure the AC voltage

MSUNG

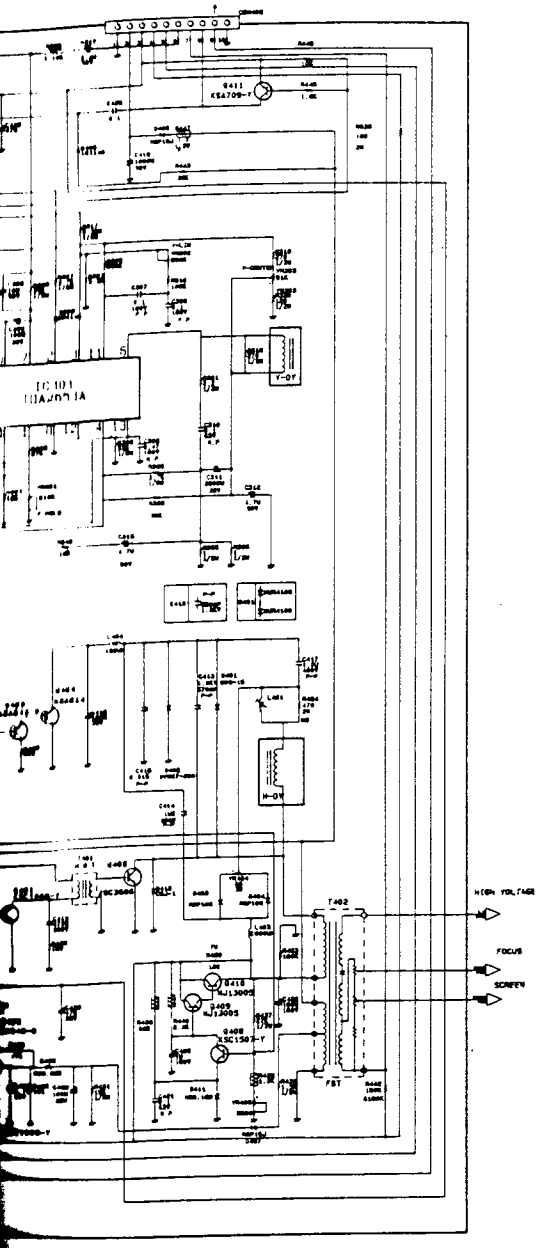

SEMICONDUCTOR LEAD IDENTIFICATION

PARTS	TYPE NO.	REF NO.	PARTS	TYPE NO.	REF NO.
	KSC1008-Y KSA709-Y	Q204 202 401 450	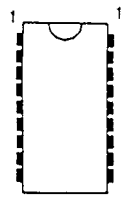	TDA2593 MC14052BCP	IC401 IC204
	2SC1789A 2SA1123R 2SC2631R 2SA1127T 2SC1685S	Q501 601 701 502 602 702 503 603 703 505 605 705 506 606 706 801 802 803 804	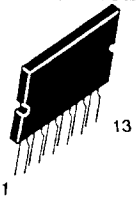	TDA2653A	IC301
	2SC3686	Q402		STR53041	IC901
	2SC2258	Q504 604 704		MC7812C	IC902
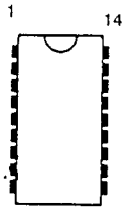	KS74HCTLS86N CA3046	IC201 501 601 701			

TO WOODEN EARTH GROUND

2 CORED CTL PARTS

Figure 1. Leakage Current Test Circuit

- [illegible] (this corresponds to [illegible]) or more is excessive and indicates a potential shock hazard which must be corrected before returning the display monitor to the user.

SAFETY NOTICE

Many electrical and mechanical parts in this chassis have special characteristics often pass unnoticed and the protection afforded by them can not necessarily be obtained by using replacement components rated for higher voltage,wattage,etc.
Replacement parts that have these special safety characteristics are identified in this manual;and its supplement electrical components having such features are identified by a ! in the Parts List and Schematic Diagrams.
Before replacing any of these components,read the Parts List in this manual carefully. The use of substitute replacement parts that do not have the same safety characteristics as specified in the Parts List may create shock, fire, or other hazards.

For Service Manuals contact
MAURITRON SERVICES
8 Cherry Tree Road, Chinnor
Oxfordshire, OX9 4QY.
Tel (01844) 351694
Fax (01844) 352554

VIDEO PCB (TOP VIEW)

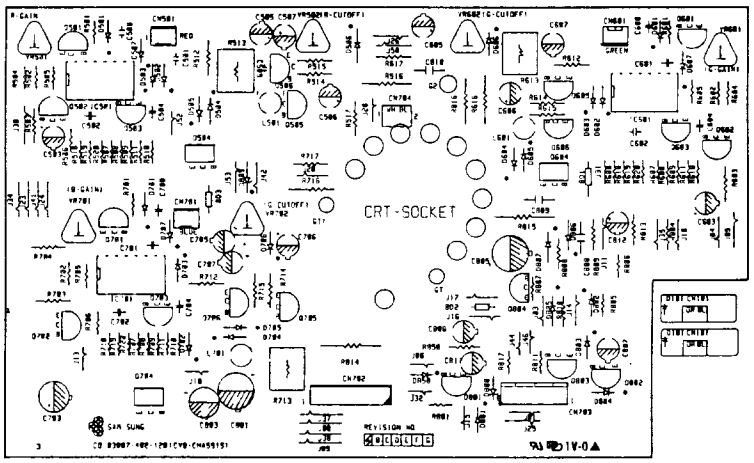

COLOR PURITY FAILURE

Check the connector CON901 on power circuit,if OK, replace PTC-1.

Switch the display monitor ON and allow it to warm up for 15minutes,then check the purity.
If the purity is not improved,replace the CRT.

NOTE : If color purity is not normal,manual degaussing should be done by mandatory method using the manual degaussing coil before inspection.

NO POWER

Does 135V appear between the plus pole and the minus pole of C908 ?

- YES → Check Q901,IC901,D905,D908 and T901
- NO → Check F901,D901-D904,R902 SWITCH

NO H-HOLD IN EVGA MODE

Does 9.6V appear at the pin13 of IC203

- YES → Check the IC207 (UPD4066BC) and its related circuit
- NO → Replace IC203

CD-1458VB.
CVB-458*
CVB-4580.
CVB-4581.
CVB-4582.
CVB-4583.
CVB-4584.
CVB-4585.
CVB-4586.
CVB-4587.
CVB-4588.
CVB-4589.

MAIN PCB (TOP VIEW)

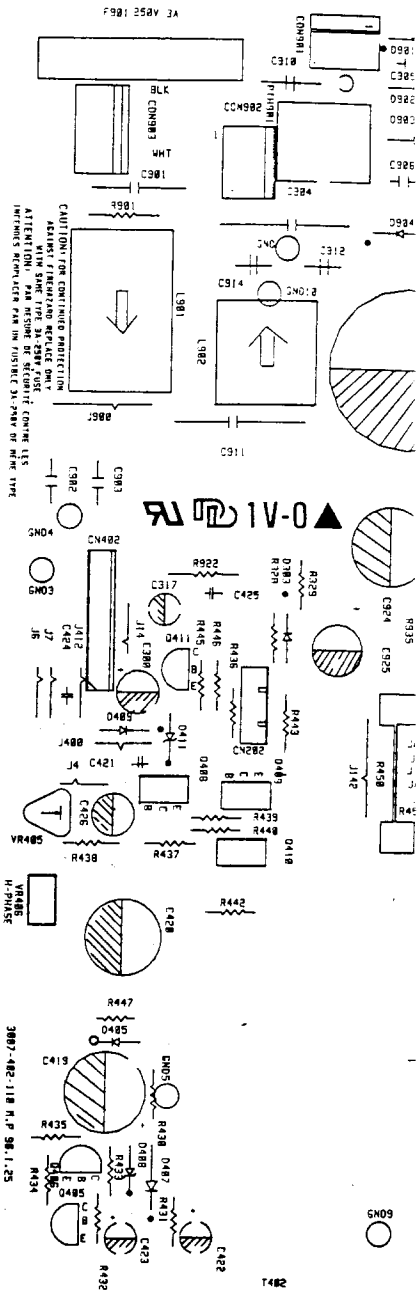

REF NO	DESCRIPTION	
D901	DIODE	BY133
D902	DIODE	BT133
D903	DIODE	BY133
D904	DIODE	BY133
D905	DIODE	ES-1F
D906	DIODE	EG01Y
D907	DIODE	ES-1F
D908	DIODE	EU1Z
D921	DIODE	RG-2
D922	DIODE	RG-2
D924	DIODE	RG2Y
D925	DIODE	RG4
PTH901	POSISTOR	PTH451CO2BG200N270
Q201	TRANSISTOR	KSC1008-Y(T)
Q202	TRANSISTOR	KSC1008-Y(T)
Q204	TRANSISTOR	KAC1008-Y(T)
Q205	TRANSISTOR	KSA643-Y
Q401	TRANSISTOR	KAC1008-Y(T)
Q402	TRANSISTOR	2SC 3686(SANYO)
Q403	TRANSISTOR	KSA643-Y
Q404	TRANSISTOR	KSA614-Y
Q405	TRANSISTOR	KAC1008-Y(T)
Q406	TRANSISTOR	KSA643-Y
Q407	TRANSISTOR	KAC1008-Y(T)
Q408	TRANSISTOR	KSC1507-Y
Q409	TRANSISTOR	MJE13005
Q410	TRANSISTOR	MJE13005

REF NO	DESCRIPTION	
D201	DIODE	1N4148(T)
D202	DIODE	1N4148(T)
D205	DIODE-ZENER	BZX 79C 5V1
D206	DIODE	1N4148(T)
D207	DIODE-ZENER	BZX 79C 5V1
D208	DIODE	1N4148(T)
D209	DIODE-ZENER	BZX 79C 5V6
D216	DIODE-ZENER	ZPD 6.8
D217	DIODE-ZENER	ZPD 6.8
D251	DIODE-ZENER	BZX 79C 5V1
D252	DIODE-ZENER	BZX 79C 5V1
D301	DIODE	1N4002(T)
D302	DIODE	1N4148(T)
D303	DIODE	1N4148(T)
D304	DIODE	1N4148(T)
D401	DIODE	MUR4100
D402	DIODE	BYV27-200(T)
D403	DIODE	RGP10G(T)
D404	DIODE	RGP10G(T)
D405	DIODE	RGP 15J(T)
D406	DIODE	1N4148(T)
D407	DIODE	RGP 15J(T)
D408	DIODE-ZENER	BZX 79C 5V6
D409	DIODE	1N4148(T)
D410	DIODE	1N4148(T)
D411	DIODE-ZENER	BZX 79C 5V1
D412	DIODE	CGJ-1
D413	DIODE	1N4148(T)

For Service Manuals contact
MAURITRON SERVICES
8 Cherry Tree Road, Chinnor
Oxfordshire, OX9 4QY.
Tel (01844) 351694
Fax (01844) 352554

REF NO	DESCRIPTION	
D503	DIODE	1N4148(T)
D504	DIODE	1N4148(T)
D505	DIODE	1N4148(T)
D506	DIODE	BAV62
D507	DIODE	1N4148(T)
D601	DIODE	1N4148(T)

MSUNG

PRINTED CIRCUIT BOARD

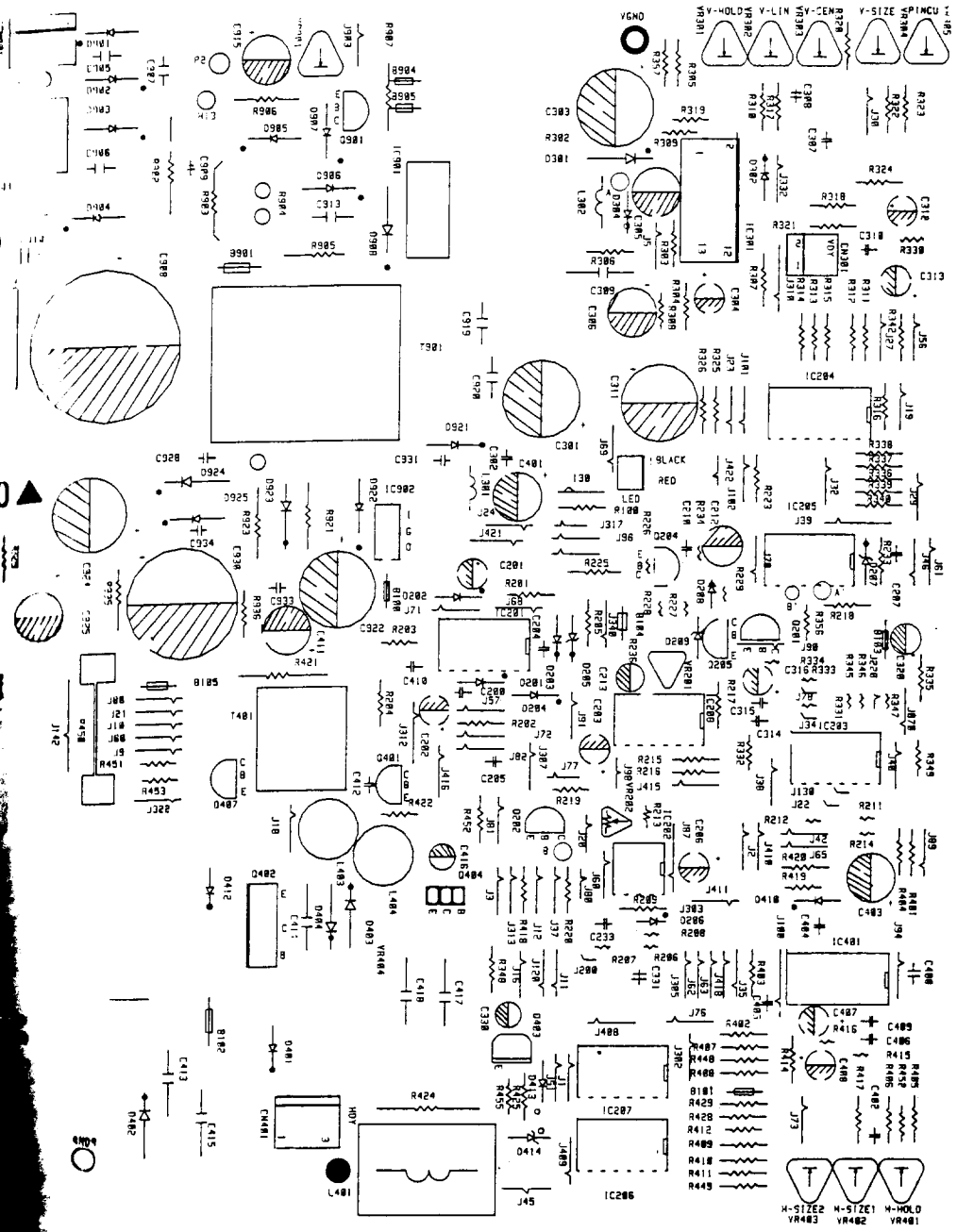

REF NO	DESCRIPTION
Q503	TRANSISTOR 2SA1123R(T)
Q504	TRANSISTOR 2SC2258
Q505	TRANSISTOR 2SC2631R(T)
Q506	TRANSISTOR 2SA1123R(T)
Q601	TRANSISTOR 2SA1123R(T)
Q602	TRANSISTOR 2SC1789A(T)
Q603	TRANSISTOR 2SA1123R(T)
Q604	TRANSISTOR 2SC2258
Q605	TRANSISTOR 2SC2631R(T)
Q606	TRANSISTOR 2SA1123R(T)
Q701	TRANSISTOR 2SC1789A(T)
Q702	TRANSISTOR 2SC1789A(T)
Q703	TRANSISTOR 2SA1123R(T)
Q704	TRANSISTOR 2SC2258
Q705	TRANSISTOR 2SC2631R(T)
Q706	TRANSISTOR 2SA1123R(T)
Q801	TRANSISTOR 2SA1127R(T)
Q802	TRANSISTOR 2SA1127R(T)
Q803	TRANSISTOR 2SA1127R(T)
Q804	TRANSISTOR 2SC1685S(T)
Q901	TRANSISTOR KAC1008-Y(T)
IC201	IC KS74HCTLS86N
IC202	IC IR9331
IC203	IC-LINEAR LM324(SST)
IC204	IC-CMOS MC14052(MOTOROLA)
IC205	IC-CMOS TC4066BP(TOSHIBA)
IC206	IC-CMOS TC4066BP(TOSHIBA)
IC207	IC-CMOS TC4066BP(TOSHIBA)
IC208	IC-TTL SN74LS00N(MOTOROLA)
IC209	IC-TTL GD74LS123

REF NO	DESCRIPTION
IC210	IC-OP LM358(SST)
IC301	IC-LINEAR TDA2653A
IC401	IC-LINEAR TDA2593(TCM)
IC501	IC CA3046
IC601	IC CA3046
IC701	IC CA3046
IC901	IC STR53041
	IC STR54041
IC902	IC-REGUATOR MC7812C,SST
T401	TRANS-HOR DRIVE : 12 X 15MM
T402	TRANS-FLYBACK ; FCO-14A017
T901	TRANS-POWER : EE-20 X 17
CN202	CONNECTOR-PIN,BASEB5B-XH-A(JST)
CN301	CONNECTOR-WAFER B2P-VH (2P 3.96MM)
CN401	CONNECTOR-WAFER B2P3-VH
CN402	CONNECTOR-WAFER 5045-10A MOLEX
CN501	CONNECTOR-WAFER B2B-XH (2P 2.5MM)
CN601	CONNECTOR-WAFER B2B-XH (2P 2.5MM)
CN701	CONNECTOR-WAFER B2B-XH (2P 2.5MM)
CN702	CONNECTOR-WAFER 5267-08A MOLEX
CN703	CONNECTOR-PIN BASEB6B-XH-A(JST)
CN704	CONNECTOR-10P ASSYCJ4581
CN901	CONNECTOR-WAFER B2P3-VH
CN902	CONNECTOR-WAFER B2P3-VH
CN903	CONNECTOR-PIN,BASE1086P030001 (LEOCO)

D605	DIODE	1N4148(T)
D606	DIODE	BAW62
D607	DIODE	1N4148(T)
D701	DIODE	1N4148(T)
D702	DIODE	1N4148(T)
D703	DIODE	1N4148(T)
D704	DIODE	1N4148(T)
D705	DIODE	1N4148(T)
D706	DIODE	BAW62
D707	DIODE	1N4148(T)
D801	DIODE	1N4148(T)
D802	DIODE	1N4148(T)
D803	DIODE	1N4148(T)
D804	DIODE ZENER	BZX 79C 5V6
D805	DIODE	BAV21(T)
D806	DIODE	IN4007(T)
D807	DIODE	IN4007(T)
D808	DIODE ZENER	BZX 79C 5V6
D850	DIODE	1N4148(T)

For Service Manuals contact
MAURITRON SERVICES
8 Cherry Tree Road, Chinnor
Oxfordshire, OX9 4QY.
Tel (01844) 351694
Fax (01844) 352554

For Service Manuals
contact
MAURITRON SERVICES
8 Cherry Tree Road, Chinnor
Oxfordshire, OX9 4QY.
Tel (01844) 351694
Fax (01844) 352554

WARNING : BEFORE SERVICING THIS CHASSIS, READ X-RAY RADIATION PRECAUTION, "SAFETY PRECAUTION," PRODUCT SAFETY NOTICE."

CAUTION

1. THE SHADED AREAS AND ⚠ MARKS IN THE SCHEMATIC DIAGRAM AND THE PARTS LIST DESIGNATE COMPONENTS WHICH HAVE SPECIAL CHARACTERISTICS IMPORTANT FOR SAFETY AND SHOULD BE REPLACED ONLY WITH TYPES IDENTICAL TO THOSE IN THE ORIGINAL CIRCUIT OR SPECIFIED IN THE PARTS LIST. BEFORE REPLACING ANY OF THESE COMPONENTS, READ CAREFULLY THE "PRODUCT SAFETY NOTICE".
2. DURING A NUMEROUS MEASUREMENT OF THIS MONITOR MATTERS THAT DEMAND SPECIAL ATTENTION IS FOLLOWING
   1) DO NOT USE YOUR INSTRUMENT BETWEEN PRIMARY GROUND (SYMBOL ⏚) AND SECONDARY CIRCUIT.
   2) DO NOT USE YOUR INSTRUMENT BETWEEN SECONDARY GROUND (SYMBOL ⏚) AND PRIMARY CIRCUIT.
3. THE SHADED AREAS IS A PRIMARY SECTION (HOT PART)

AVERTISSMENT : "CE RECEPTEUR EST

EQUIPE DE COMPOSANTS CRITIQUES POUR LA SECURITE TOUTESLES PIECES INDIQUEES DANS LES ZONES OMBREES DU SCHEMA SONT CRITIQUE POUR LA SECURITE POUR MAINTENIR LE DEGRE DE SECURITE DE LAPPAREIL NE REMPLACER LE FABRICANT DONT LE FONCTIONNEMENT EST CRITITE QUE PAR DES PIECES RECOMMANDEES PAR LE FABRICANT CONSULTER LA NOMENCLATURE DES PIECES POUR TROUVER LES PIECES DE RECHANGE EXACTES".

WARNING : "THIS EQUIPMENT CONTAINS

SAFETY CRITICAL COMPONENTS ALL PARTS SHOWN IN THE SHAEDE AREAS OF THE SCHEMATIC ARE SAFETY REPLACE SAFETY CRITICAL COMPONENTS ONLY WITH MANUFACTURERS' RECOMMENDED PARTS LIST FOR EXACT REPLACEMENTS."

NOTE

1. RESISTANCE IS SHOWN IN OHM K=1,000 M=1,000,000. RATED POWER OF RESISTOR NOT NOTED IN SCHEMATIC DIAGRAM IS 1/4W.
2. CAPACITANCE IS SHOWN UF AND NOT NOTED CAPACITANCES IS SHOWN PF. 1UF=1,000,000PF RATED VOLTAGE OF CONDENCER NOT NOTED IN SCHEMATIC DIAGRAM IS 50V.
3. ABBREVIATION AND SYMBOL

MO : A-METAL OXIDE	CM: A-CEMENT
F : A-FUSIBLE	P: C-POLYESTOR
C: A-COMPOSITION	T: C-TANTALIUM
PP: C-POLYPROPYLENE	⏚ : HOT GROUND
MP: METAL POLYESTOR	⏚ : COLD GROUND

4. THE SECONDARY VOLTAGE IS READ WITH SSVM FROM INDICATED POINT TO COLD GROUND (⏚) THE PRIMARY VOLTAGE IS READ WITH SSVM FROM INDICATED POINT TO HOT GROUND (⏚)
5. THIS SCHEMATIC DIAGRAM IS SUBJECTED TO CHANGE WITHOUT NOTICE FOR FURTHER IMPROVEMENT.

CD-1458VB.
CVB-458*
CVB-4580.
CVB-4581.
CVB-4582.
CVB-4583.
CVB-4584.
CVB-4585.
CVB-4586.
CVB-4587.
CVB-4588.
CVB-4589.

For Service Manuals
contact
MAURITRON SERVICES
8 Cherry Tree Road, Chinnor
Oxfordshire, OX9 4QY.
Tel (01844) 351694
Fax (01844) 352554

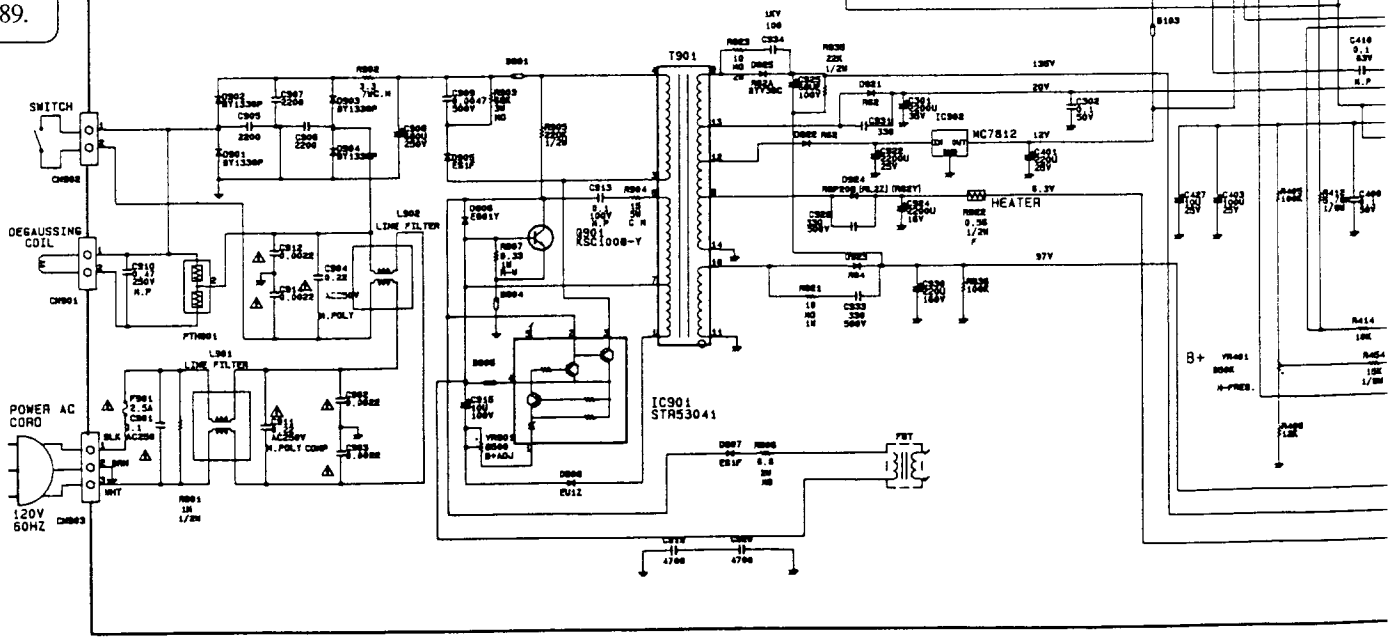

SAMSUNG

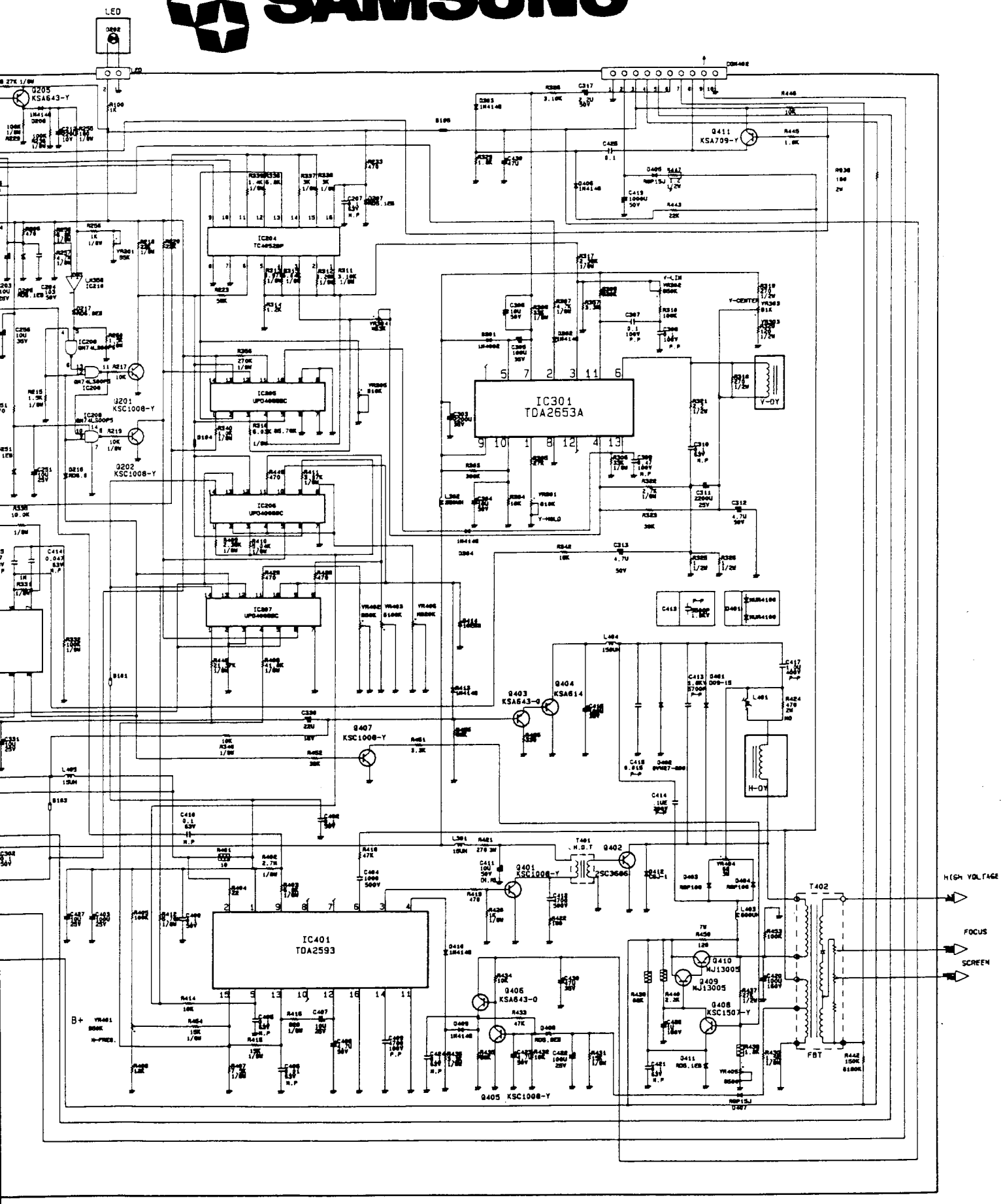
LED
Q205
KSA643-Y
Q411
KSA709-Y
IC204
TC4052BP
IC205
UPD4066BC
IC206
UPD4066BC
IC207
UPD4066BC
IC301
TDA2653A
Q201
KSC1008-Y
Q202
KSC1008-Y
Q403
KSA643-Q
Q404
KSA614
Q407
KSC1008-Y
Q401
KSC1008-Y
Q402
2SC3606
IC401
TDA2593
Q406
KSA643-Q
Q405
KSC1008-Y
Q410
NJ13005
Q409
NJ13005
Q408
KSC1507-Y
T402
T401
FBT
HIGH VOLTAGE
FOCUS
SCREEN
V-OY
H-OY
V-CENTER
V-LIN
Y-HOLD
B+

SAMSUNG

REF NO	DESCRIPTION
VR201	VR-SEMI RVW6 FOR B5K
VR202	VR-SEMI RVW6 FOR B3K
VR301	VR-SEMI CET 117A B10K
VR302	VR-SEMI CET 117A B50K
VR303	VR-SEMI CET 117A B1K
VR304	VR-SEMI CET 117A B3K
VR305	VR-SEMI CET 117A B10K
VR401	VR-SEMI CET 117A B50K
VR402	VR-SEMI CET 117A B10K
VR403	VR-SEMI CET 117A B100K
VR404	VR-WIRE 3W 68OHM TYPE
VR405	VR-SEMI CET 117A B500
VR406	VR-ROUND EVU-E2A E25B14(20K)
VR501	VR-SEMI CET 117A B500
VR502	VR-SEMI CET 117A B10K
VR601	VR-SEMI CET 117A B500
VR602	VR-SEMI CET 117A B10K
VR701	VR-SEMI CET 117A B500
VR702	VR-SEMI CET 117A B10K
VR901	VR-SEMI CET 117A B500
B101	COIL-CHOKE 1.5UH +-20%
B103	COIL-CHOKE 1.5UH +-20%
B104	COIL-CHOKE 1.5UH +-20%
B105	COIL-CHOKE 1.5UH +-20%
B901	COIL-CHOKE 1.5UH +-20%
B904	COIL-CHOKE 1.5UH +-20%
	WIRE-SO COPPER;TA 0.6 SN
B905	COIL-CHOKE 1.5UH +-20%
	WIRE-SO, COPPER;TA 0.6 SN

REF NO	DESCRIPTION
R100	R-CARBON RD 1/4T 1K-J
R201	R-METAI FILM RM 1/8T 1K-J
R202	R-METAL FILM RM 1/8T 1K-J
R203	R-METAL FILM RM 1/8T 270K-J
R204	R-METAL FILM RM 1/8T 270K-J
R205	R-CARBON RD 1/4T 470-J
R206	R-METAL FILM RN 1/8T 10K-J
R207	R-METAL FILM RM 1/8T 120K-J
R208	R-METAL FILM RN 1/8T 10K-J
R209	R-CARBON RD 1/4T 10K-J
R211	R-METAL FILM RM 1/8T 3.3K-F
R212	R-METAL FILM RM 1/8T 82K-J
R213	R-METAL FILM RM 1/8T 8.2K-J
R214	R-METAL FILM RM 1/8T 10K-F
R215	R-METAL FILM RM 1/8T 1.5K-J
R217	R-CARBON RD 1/4T 10K-J
R218	R-METAL FILM RM 1/8T 22K-J
R219	R-METAL FILM RN 1/8T 10K-J
R220	R-CARBON RD 1/4T 22K-J
R223	R-CARBON RD 1/4T 56K-J
R225	R-METAL FILM RM 1/8T 2.7K-J
R226	R-METAL FILM RN 1/8T 100K-J
R228	R-METAL FILM RM 1/8T 27K-J
R229	R-METAL FILM RN 1/8T 100K-J
R233	R-CARBON RD 1/4T 470-J

REF
R23
R25
R25
R25
R25
R25
R25
R25
R25
R26
R26
R26
R30
R30
R30
R30
R30
R30
R30
R30
R31
R31
R31
R31
R31
R31
R31
R31
R32

REF NO	DESCRIPTION
R406	R-CARBON RD 1/4T 12K-J
R407	R-METAL FILM RM 1/8T 7.5K-J
R408	R-METAL FILM RM 1/8T 41.0K-F
R409	R-METAL FILM RM 1/8T 2.7K-J
R410	R-METAL FILM RM 1/8T 2.36K-J
R411	R-METAL FILM RM 1/8T 3.9K-J
R412	R-METAL FILM RM 1/8T 5.78K-J
R414	R-CARBON RD 1/4T 10K-J
R415	R-METAL FILM RM 1/8T 15K-J
R416	R-METAL FILM RM 1/8T 820-J
R418	R-CARBON RD 1/4T 47K-J
R419	R-CARBON RD 1/4T 470-J
R420	R-METAL FILM RM 1/8T 1K-J
R421	R-METAL OXIDE RS 3P 270-J
R422	R-CARBON RD 1/4T 180-J
R424	R-METAL,OXIDE RS 2P 470-J
R425	R-CARBON RD 1/4T 330-J
R428	R-CARBON RD 1/4T 470-J
R429	R-CARBON RD 1/4T 470-J
R430	R-METAL FILM RM 1/8T 1.5K-J
R431	R-METAL FILM RM 1/8T 15K-J
R432	R-CARBON RD 1/4T 10K-J
R433	R-CARBON RD 1/4T 47K-J
R434	R-CARBON RD 1/4T 10K-J
R435	R-CARBON RD 1/4T 56K-J
R436	R-METAL FILM RM 1/8T 3.3K-J
R437	R-CARBON RD 1/2T 27K-J(S)
R438	R-FUSIBLE RD 1/4T 1.8K-J
R439	R-CARBON RD 1/4T 82K-J,F.P
R440	R-FUSIBLE RF 1/4T 2.2K-J

REF NO	DESCRIPTION
R442	R-CARBON RD 1/4T 150K-J
R442	R-CARBON RD 1/4T 180K-J
R443	R-CARBON RD 1/4T 22K-J
R445	R-CARBON RD 1/4T 1.8K-J
R446	R-CARBON RD 1/4T 10K-J
R447	R-FUSIBLE FMR 1/2(T) 1.2-J
R448	R-METAL FILM RN 1/8T 21.37K-F
R449	R-CARBON RD 1/4T 470-J
R450	R-CEMENT,WIRE RP 7P 120-J
R451	R-CARBON RD 1/4T 3.3K-J
R452	R-CARBON RD 1/4T 39K-J
R453	R-CARBON RD 1/4T 100K-J
R454	R-METAL FILM RM 1/8T 15K-J
R455	R-CARBON RD 1/4T 68K-J
R501	R-METAL FILM RM 1/8T 75-J
R502	R-METAL FILM RM 1/8T 180-J
R503	R-CARBON RD 1/2T 4.3K-J(S)
R504	R-CARBON RD 1/2T 6.8K-J(S)
R505	R-METAL FILM RM 1/8T 1K-J
R506	R-METAL FILM RM 1/8T 1K-J
R507	R-METAL FILM RM 1/8T 1K-J
R508	R-METAL FILM RM 1/8T 1.8K-J
R509	R-METAL FILM RM 1/8T 100-J
R510	R-MTAL FILM RM 1/8T 15-J
R511	R-METAL FILM RM 1/8T 68-J
R513	R-CEMENT RW5V 1.8K-J(LS)
R514	R-FUSIBLE RF 1/4T 150-J
R515	R-FUSIBLE RF 1/4T 150-J
R516	R-COMPOSITION RC 1/2T 100-K

REF NO	DESCRIPTION
R517	R-CARBON RD 1/4T 470K-J
R518	R-METAL FILM RM 1/8T 47-J
R519	R-METAL FILM RM 1/8T 100-J
R520	R-METAL FILM RM 1/8T 47-J
R601	R-METAL FILM RM 1/8T 75-J
R602	R-METAL FILM RM 1/8T 180-J
R603	R-CARBON RD1/2T 4.3K-J(S)
R604	R-CARBON RD 1/2T 6.8K-J
R605	R-METAL FILM RM 1/8T 1K-J
R606	R-METAL FILM RM 1/8T 1K-J
R607	R-METAL FILM RM 1/8T 1K-J
R608	R-METAL FILM RM 1/8T 1.8K-J
R609	R-METAL FILM RM 1/8T 100-J
R610	R-METAL FILM RM 1/8T 15-J
R611	R-METAL FILM RM 1/8T 68-J
R612	R-CARBON RD 1/4T 470K-J
R613	R-CEMENT RW5 1.8K-J(LS)
R614	R-FUSIBLE RF 1/4T 150-J
R615	R-FUSIBLE RF 1/4T 150-J
R616	R-COMPOSITION RC 1/2T 100-K
R617	R-CARBON RD 1/4T 470K-J
R618	R-METAL FILM RM 1/8T 47-J
R619	R-METAL FILM RM 1/8T 100-J
R620	R-METAL FILM RM 1/8T 47-J
R701	R-METAL FILM RM 1/8T 75-J
R703	R-CARBON RD 1/2T 4.3K-J(S)
R704	R-CARBON RD 1/2T 6.8K-J(S)
R705	R-METAL FILM RM 1/8T 1K-J
R706	R-METAL FILM RM 1/8T 1K-J

REF NO	DESCRIPTION
R234	R-METAL FILM RM 1/8T 100K-J
R251	R-CARBON RD 1/4T 470-J
R252	R-METAL FILM RM 1/8T 1.5K-J
R253	R-METAL FILM RM 1/8T 10K-J
R254	R-CARBON RD 1/4T 470-J
R255	R-METAL FILM RM 1/8T 180K-J
R256	R-METAL FILM RM 1/8T 1K-J
R257	R-METAL FILM RM 1/8T 4.7K-J
R258	R-METAL FILM RM 1/8T 6.8K-J
R260	R-METAL FILM RM 1/8T 1.5K-J
R261	R-METAL FILM RM 1/8T 1K-J
R262	R-METAL FILM RM 1/8T 10K-J
R303	R-CARBON RD 1/4T 300K-J
R304	R-CARBON RD 1/4T 10K-J
R305	R-CARBON RD 1/4T 27K-J
R306	R-METAL FILM RM 1/8T 33K-J
R307	R-METAL FILM RM 1/8T 4.7K-J
R308	R-METAL FILM RM 1/8T 33K-J
R309	R-CARBON RD 1/4T 820K-J
R310	R-CARBON RD 1/4T 47K-J
R311	R-METAL FILM RN 1/4T 3.1K-F
R312	R-METAL FILM RN 1/8T 3.26K-F
R313	R-METAL FILM RN 1/8T 3.97K-F
R314	R-CARBON RD 1/4T 1.2K-J
R315	R-METAL FILM RN 1/8T 5.04K-F
R316	R-METAL FILM RM 1/8T 5.78K-F
R317	R-METAL FILM RM 1/8T 2.36K-F
R318	R-CARBON RD 1/2T 270-J(S)
R319	R-CARBON RD 1/2T 270-J(S)
R320	R-CARBON RD 1/2T 120-J(S)

For Service Manuals contact
MAURITRON SERVICES
8 Cherry Tree Road, Chinnor
Oxfordshire, OX9 4QY.
Tel (01844) 351694
Fax (01844) 352554

REF NO	DESCRIPTION
R321	R-CARBON , RD 1/2T 2.2-J
R322	R-METAL FILM RM 1/8T 2.7K-J
R323	R-CARBON RD 1/4T 39K-J
R325	R-CARBON RD 1/2T 1-J(S)
R326	R-CARBON RD 1/2T 1-J(S)
R328	R-METAL FILM RM 1/4T 3.1K-J
R329	R-CARBOM RD 1/4T 1.8K-J
R331	R-METAL FILM RM 1/8T 1M-J
R332	R-METAL FILM RN 1/8T 100K-J
R333	R-METAL FILM RM 1/8T 33K-J
R334	R-METAL FILM RN 1/8T 10K-J
R335	R-METAL FILM RM 1/8T 10K-F
R336	R-METAL FILM RM 1/4T 6.8K-F
R337	R-METAL FILM RM 1/8T 3K-F
R338	R-METAL FILM RM 1/8T 3K-F
R339	R-METAL FILM RN 1/8T 1.4K-F
R340	R-METAL FILM RM 1/8T 1K-F
R342	R-CARBON RD 1/4T 18K-J
R345	R-METAL FILM RM 1/8T 33K-J
R346	R-METAL FILM RM 1/8T 47K-J
R347	R-METAL FILM RM 1/8T 47K-J
R348	R-CARBON RD 1/4T 10K-J
R349	WIRE-SO COPPER
R356	R-METAL FILM RN 1/8T 270K-F
R357	R-CARBON RD 1/4T 3.3K-J
R401	R-FUSIBLE RF 1/4T 10-J
R402	R-CARBON RD 1/4T 2.7M-J
R403	R-CARBON RD 1/4T 6.8K-J
R404	R-CARBON RD 1/4T 22-J
R405	R-CARBON RD 1/4T 100K-J

CD-1458VB.
CVB-458*
CVB-4580.
CVB-4581.
CVB-4582.
CVB-4583.
CVB-4584.
CVB-4585.
CVB-4586.
CVB-4587.
CVB-4588.
CVB-4589.

For Service Manuals contact
MAURITRON SERVICES
8 Cherry Tree Road, Chinnor
Oxfordshire, OX9 4QY.
Tel (01844) 351694
Fax (01844) 352554

SCRIPTION
RD 1/4T 470K-J
M RM 1/8T 47-J
M RM 1/8T 100-J
M RM 1/8T 47-J
M RM 1/8T 75-J
M RM 1/8T 180-J
RD1/2T 4.3K-J(S)
RD 1/2T 6.8K-J
M RM 1/8T 1K-J
M RM 1/8T 1K-J
M RM 1/8T 1K-J
M RM 1/8T 1.8K-J
M RM 1/8T 100-J
M RM 1/8T 15-J
M RM 1/8T 68-J
RD 1/4T 470K-J
RW5 1.8K-J(LS)
RF 1/4T 150-J
RF 1/4T 150-J
TION RC 1/2T 100-K
RD 1/4T 470K-J
M RM 1/8T 47-J
M RM 1/8T 100-J
M RM 1/8T 47-J
M RM 1/8T 75-J
RD 1/2T 4.3K-J(S)
RD 1/2T 6.8K-J(S)
M RM 1/8T 1K-J
M RM 1/8T 1K-J

REF NO	DESCRIPTION
R707	R-METAL FILM RM 1/8T 1K-J
R708	R-METAL FILM RM 1/8T 1.8K-J
R709	R-METAL FILM RM 1/8T 100-J
R710	R-METAL FILM RM 1/8T 15-J
R711	R-METAL FILM RM 1/8T 68-J
R712	R-CARBON RD 1/4T 470K-J
R713	R-CERMENT RW5V 1.8K-J(LS)
R714	R-FUSIBLE RF 1/4T 150-J
R715	R-FUSIBLE RF 1/4T 150-J
R716	R-COMPOSITION RC 1/2T 100-K
R717	R-CARBON RD 1/4T 470K-J
R718	R-METAL FILM RM 1/8T 47-J
R719	R-METAL FILM RM 1/8T 100-J
R720	R-METAL FILM RM 1/8T 47-J
R801	R-CARBON RD 1/2T 10K-J(S)
R804	R-METAL FILM RM 1/8T 1K-J
R805	R-METAL FILM RM 1/8T 1.5K-J
R806	R-METAL FILM RM 1/8T 1K-J
R807	R-METAL FILM RM 1/8T 100K-J
R808	R-METAL FILM RM 1/8T 1K-J
R809	R-CARBON RD 1/4T 2.2M-J
R810	R-METAL FILM RM 1/8T 3.3K-J
R811	R-METAL FILM RM 1/8T 3.3K-J
R813	R-METAL FILM RM 1/8T 1K-J
R814	R-METAL OXIDE(M)RS 3P 1.5K-J
R815	R-COMPOSITION RC 1/2T 100-K
R816	R-COMPOSITION RC 1/2T 100-K
R817	R-CARBON RD 1/4T 1.8K-J
R850	R-METAL FILM RM 1/8T 27K-J

REF NO	DESCRIPTION
R901	R-COMPOSITION RC 1/2T 1M-K
	R-COMPOSITION RC 1/2T 330K-K
R902	R-CEMENT,WIRE RP7P 3.3-J
	R-CEMENT,WIRE RW 2P 0.6-J
R903	R-METAL OXIDE RS 3P 68K-J(S)
R904	R-CEMENT,WIRE RW 5V 15-J
	R-CEMENT,WIRE RW 5V 47-J
R905	R-CARBON RD 1/2T 220K-J
	R-CARBON RD 1/2T 180K-J
R906	R-METAL OXIDE RP 2P 6.8-J
R907	R-WIRE RW 1L 0.33-J
R921	R-METAL OXIDE RP1P 10-J
R922	R-FUSIBLE FMR1/2P(T)0.56-J
R923	R-METAL,OXIDE RS 2P 10-K(S)
R935	R-CARBON RD 1/2T 22K-J(S)
R936	R-CARBON RD 1/4T 100K-J
R938	R-METAL OXIDE RS 2P 180-J(S)
R950	R-CARBON RD 1/2T 180K-J