SERVICE MANUAL

LCD TV W2607C

THESE DOCUMENTS ARE FOR REPAIR SERVICE INFORMATION ONLY. EVERY REASONABLE EFFORT HAS BEEN MADE TO ENSURE THE ACCURACY OF THIS MANUAL; WE CANNOT GUARANTEE THE ACCURACY OF THIS INFORMATION AFTER THE DATE OF PUBLICATION AND DISCLAIMS RELIABILITY FOR CHANGES, ERRORS OR OMISSIONS.

Revision List

Version	Release Date	Revision Instructions	TPV Model
A00	April-5-2006	Initial Release	EEF5GHNKDEDMJMP
A01	April-14-2006	**Update the method of accessing into factory mode**	
A02	April-25-2006	Add “Max Brightness measurement” on Page 33	
A03	Nov.-13-2007	Add new modle in Item 14	E265GHNKDEDFNP E265GHNKDEDLNP E265GHNKDEDMNP

Important Safety Notice

ANY PERSON ATTEMPTING TO SERVICE THIS CHASSIS MUST FAMILIARIZE HIMSELF WITH THE CHASSIS AND BE AWARE OF THE NECESSARY SAFETY PRECAUTIONS TO BE USED WHEN SERVICING ELECTRONIC EQUIPMENT CONTAINING HIGH VOLTAGES.
CAUTION: USE A SEPARATE ISOLATION TRANSFORMER FOR THIS UNIT WHEN SERVICING
REFER TO BACK COVER FOR IMPORTANT SAFETY GUIDELINGS

Proper service and repair is important to the safe, reliable operation of all Dell Company** Equipment. The service procedures recommended by Dell and described in this service manual are effective methods of performing service operations. Some of these service operations require the use of tools specially designed for the purpose. The special tools should be used when and as recommended.
It is important to note that this manual contains various CAUTIONS and NOTICES which should be carefully read in order to minimize the risk of personal injury to service personnel. The possibility exists that improper service methods may damage the equipment. It is also important to understand that these CAUTIONS and NOTICES ARE NOT EXHAUSTIVE. Dell could not possibly know, evaluate and advise the service trade of all conceivable ways in which service might be done or of the possible hazardous consequences of each way. Consequently, Dell has not undertaken any such broad evaluation. Accordingly, a servicer who uses a service procedure or tool which is not recommended by Dell must first satisfy himself thoroughly that neither his safety nor the safe operation of the equipment will be jeopardized by the service method selected.

* * Hereafter throughout this manual, Dell Company will be referred to as Dell.
WARNING
Use of substitute replacement parts, which do not have the same, specified safety characteristics may create shock, fire, or other hazards.
Under no circumstances should the original design be modified or altered without written permission from Dell. Dell assumes no liability, express or implied, arising out of any unauthorized modification of design. Servicer assumes all liability.

FOR PRODUCTS CONTAINING LASER:
DANGER - Invisible laser radiation when open. AVOID DIRECT EXPOSURE TO BEAM.
CAUTION - Use of controls or adjustments or performance of procedures other than those specified herein may result in hazardous radiation exposure.
CAUTION - The use of optical instruments with this product will increase eye hazard.

TO ENSURE THE CONTINUED RELIABILITY OF THIS PRODUCT, USE ONLY ORIGINAL MANUFACTURER'S REPLACEMENT PARTS, WHICH ARE LISTED WITH THEIR PART NUMBERS IN THE PARTS LIST SECTION OF THIS SERVICE MANUAL.

Take care during handling the LCD module with backlight unit
- Must mount the module using mounting holes arranged in four corners.
- Do not press on the panel, edge of the frame strongly or electric shock as this will result in damage to the screen.
- Do not scratch or press on the panel with any sharp objects, such as pencil or pen as this may result in damage to the Panel.
- Protect the module from the ESD as it may damage the electronic circuit (C-MOS).
- Make certain that treatment person’s body is grounded through wristband.
- Do not leave the module in high temperature and in areas of high humidity for a long time.
- Avoid contact with water as it may a short circuit within the module.

If the surface of panel becomes dirty, please wipe it off with a soft material. (Cleaning with a dirty or rough cloth may damage the panel.)

Table Of Contents

Revision List 2
Important Safety Notice 3
Table Of Contents 4
1. General Specifications 5
2. Operating Instructions 6
2.1 The Use Of Remote Control 6
2.2 Front Panel Control Knobs 9
2.3 OSD Operating 13
2.4 Connecting LCD TV Display 20
3. Input /Output Specification 23
3.1 Input Signal connector 23
3.2 Factory Preset Display Modes 24
4. EDID Program Instructions 25
5. Firmware Upgrade Instructions 28
5.1 Tools And Software 28
5.2 Installation 28
6. Definition Of Pixel Defects 30
6.1 Dot Defects 30
6.2 Polarizer Defects 30
6.3 Foreign Material 31
6.4 Line Defect 31
6.5 Bezel Appearance 31
6.6 Others 31
7. White Balance, Luminance Adjustment 32
8. Mechanical Instructions 34
9. Repair Flow Chart 41
10. PCB Layout 45
10.1 Main Board 45
10.2 Power Board 47
10.3 I/O Board 48
10.4 Key Board 48
10.5 Side Board 49
11. Block Diagram 50
11.1 Main Board 50
11.2 Power Board 51
11.3 Exploded View 52
12. Schematic Diagram 53
12.1 Main Board 53
12.2 Power Board 78
13. BOM List 79
14. Different Parts List 120

1. General Specifications

Items		Specification		
LCD Panel	Screen Size	26” TFT LCD color Panel (LPL)		
	Image Aspect Ratio	Wide Screen (16:9)		
	Resolution	1366 x 768 (WXGA)		
	Viiewable Area	575.8mm × 323.7mm		
	Pixel Pitch	0.1405mm × 0.4215mm		
	Display colors	16.7 million		
	Contrast Ratio	600:1 (Typical)		
	Brightness	500 cd / m^2 (Typical)		
	Viewing Angle	170° (Horizontal) / 170° (Vertical)		
	Response Time (Gray to Gray)	8ms (Typical)		
	Lamp Lifetime	60,000 hr (Typical)		
	Color Temperature	Cool / Warm		
TV Function	TV Tuning System	NTSC/ATSC		
	Inputs	Video	Composite (CVBS)	Two (side+ bottom)
			S-Video	Two (side+ bottom)
			Component	Two (bottom)
			TV in (coaxial)	Two (bottom)
			Audio (L+R)	Six pairs
			DVI (For use with a video device)	One (bottom)
		Computer	VGA (For use as computer monitor)	One (bottom)
			DVI (For use as computer monitor)	One (bottom)
			Audio (PC)	One (bottom)
	Outputs	Video	Composite (CVBS)	One (bottom)
			Audio (L+R)	One pair
			Headphone	One (side)
	HDTV Capable	Yes		
	Closed Cption	Yes		
	V -Chip	Yes		
PC Input	Signal Input	Analog: D-Sub 15 pin (detachable cable)		
		Digital: DVI-D 24 pin (detachable cable)		
	PnP compatibility	DDC2B		
	Input frequency	Analog: FH: 31 kHz to 64 KHz; FV: 50 Hz to 75 Hz		
	Input Audio F	Headphone Mini-jack for stereo		
Audio Output	Audio Output: L / R	Speaker (built-in): Two 15 (max) watt speakers		
		Effects: SRS TruSurround XT; Midnight Mode		
Power	Power Supply	AC 100V~240V, 50 ± 3Hz, 60 ± 3Hz		
	Power-On Consumption	<180 W		
Panel Tilt/ Swivel	Tilt, Swivel	-5 /+20 degrees, +/- 45 degrees.		
Environment	Operating	Temperature: 0°C ~ + 40°C		
		Humidity: 10% ~ 85%		
	Storage	Temperature: -10°C ~ + 50°C		
		Humidity: 5% ~ 85%		
Weight (with stand)	14.5 Kg			

2. Operation Instructions

2.1 The Use Of Remote Control

Installing batteries

Before you use your remote control, install two-AAA batteries.

1. Slide open the battery cover.
2. Install the batteries, make sure that you match the + and – on the batteries with + and – symbols in the battery compartment.
3. Replace the battery cover.

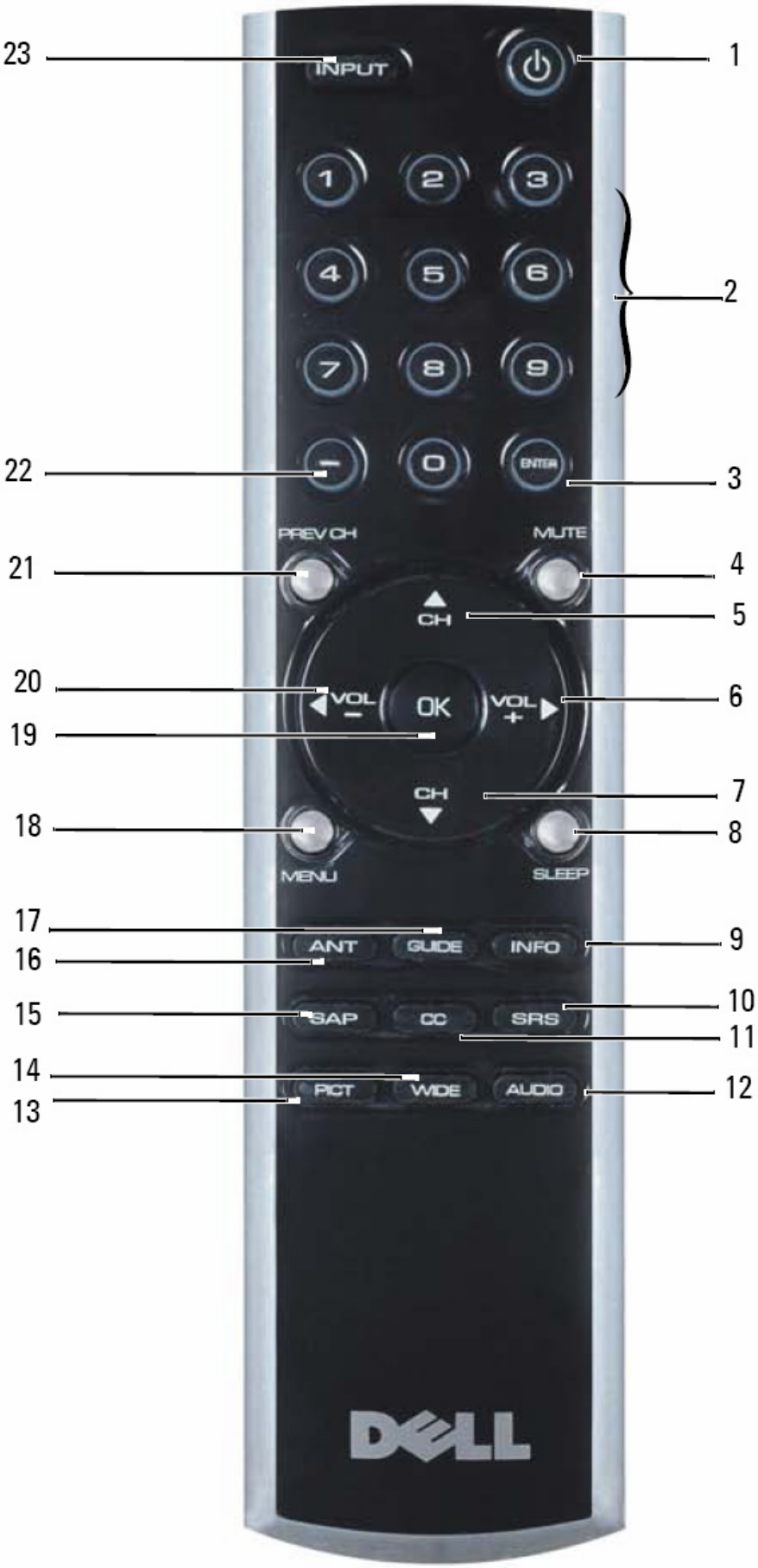
23
INPUT
1
1
2
3
4
5
6
7
8
9
0
ENTER
22
PREV CH
MUTE
21
4
CH
5
20
VOL
OK
VOL
6
19
CH
7
18
8
MENU
SLEEP
17
ANT
GUIDE
INFO
9
16
15
SAP
CC
SRS
10
11
14
PICT
WIDE
AUDIO
12
13
DELL

1	Power Button	Turns the wide LCD monitor on and off
2	Number Button	Press to select a channel
3	Enter	Select an TV menu option, confirms a channel selection
4	Mute	Press to turn the sound on and off
5	CH (up icon)	Push to view the next channel
		In the TV menu, use the channel button to navigate through the menus in the TV menu
6	Vol +	Increases the volume in the TV Menu, use the volume button to navigate through the menus
7	CH (down icon)	Press to view the previous channel
		In the TV menu, use the channel button to navigate through the menus in the TV menu
8	Sleep	Turns on the sleep timer
9	INFO	Display information about your TV display (for example, in TV mode display the channel you are watching)
10	SRS	Toggle SRS surround on and off
11	CC	Cycles through the Closed Caption menu.
12	Audio	Cycles through the preset Audio options
13	Pict	Cycles through the preset options for the **Picture** menu
14	Wide	Cycles through the size (aspect ratio) options from the Picture menu
15	SAP	Turns on the Second Audio Program (SAP)
16	ANT	Selects TV turner as input source
17	Guide	Toggle EPC on and off
18	Menu	Enters and exit the TV main menu
19	OK	Selects an TV main menu
20	Vol -	Decreases the volume in the TV Menu, use the volume button to navigate through the menus
21	Prev CH	Returns you to previously viewed channel
22	-	For setting channels
23	Input	Enters and exits the Input Select menu

2.2 Front Panel Control Knobs

Front View

1.	IR receiver	Senses the signal from the remote control
2.	Power indicator Light (LED)	The light is blue when the TV display is on and amber when it is in power save mode.

Right Side View

1.	Power button	Press to turn the TV display on and off. The power button is blue when it is on and amber when it is in power saving mode
2.	/OK TV menu button	Press to enable the TV menu
3.	Volume button	Press to decrease the volume
4.	Volume button	Press to increase the volume
5.	Channel button	Press to select the previous channel or navigate through the TV menu
6.	Channel button	Press to select the next channel or navigate through the TV menu
7.	Input select button	Press to display the Input select menu

Left Side View

1.	AV Side (S-Video 2)	Connect devices such as a video game system or a VCR
2.	AV Side (Composite 2)	Connect devices such as a VCR or DVD player
3.	AV SIDE audio connector	Use the audio connector if you have connected a device to AV SIDE connector
4.	Headphone connector	Connect headphones

Bottom View

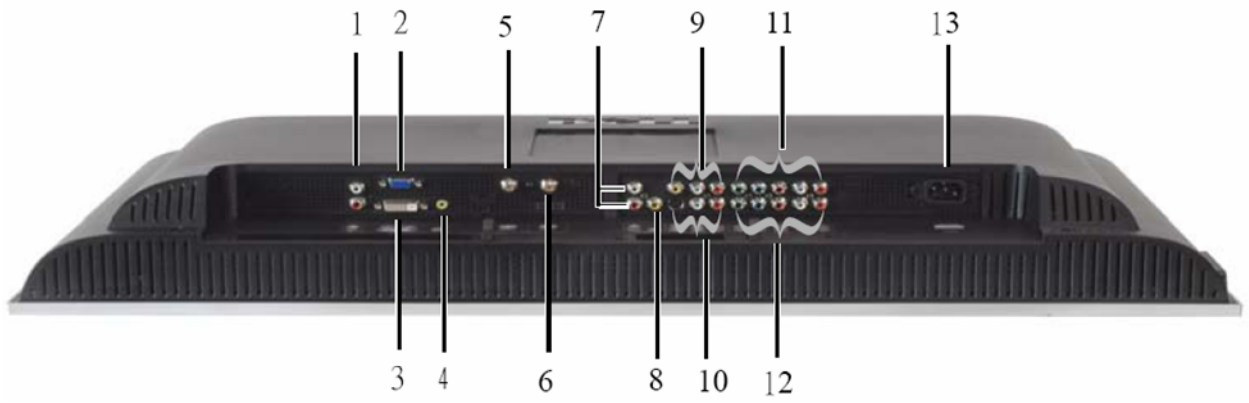

1.	DVI audio connector (L / R)	Use the DVI audio connector if you have connected a device such as a DVD player to the DVI connector.
2.	VGA	Connect your computer.
3.	DVI connector	Connect your computer or video devices such as a DVD player.
4.	Audio connector for VGA or DVI	Connect the audio cable from your computer to the LCD TV Display.
5.	NTSC/Analog Cable	Connect analog cable TV box or an analog antenna.
6.	HDTV/Digital Cable	Connect digital cable TV box or a digital antenna.
7.	Composite out/Audio Out (L/R)	Connect to VCR (L/R) audio inputs.
8.	Composite out/Video Out	Connect to VCR video input.
9.	Composite video and audio connectors (AV1)	Connect devices such as a VCR or DVD player.
10.	S-Video video and audio connectors (AV2)	Connect devices such as a video game system or a VCR.
11.	Component video and audio connectors (AV3)	Connect devices such as a DVD player or cable TV box.
12.	Component video and audio connectors (AV4)	Connect devices such as a DVD player or cable TV box.
13.	Power connector	Connect your power cord.

2.3 OSD Operating

Using Remote Control With the TV Menu

1. To enter the TV menu, press the menu button. Seven icons appear along the bottom of the screen.

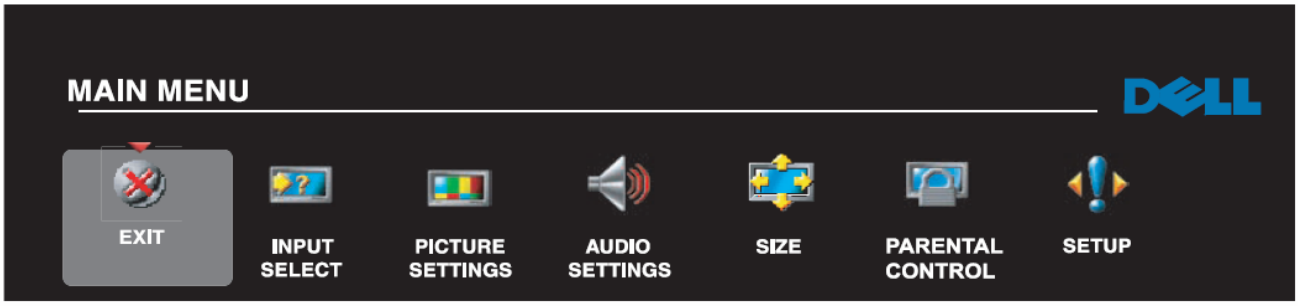

2. Use the left and right buttons (volume buttons) to move between the icons.
   The icon appears highlighted as you move through the menu.
3. To select an option, push the **OK** button when the icon is highlighted.
4. A new menu appears for that selected option, use the up and down buttons (channel buttons) to move through the various settings.

Note: A red arrow appears next to the setting as you navigate through the options. A check mark appears next to the option that you have selected.

5. Use the left and right buttons (volume buttons) and the **OK** button to adjust or select settings.

Note: You can select EXIT at any time to return to the main menu.

6. After you have made your selections, press the **EXIT** to return to the main menu.
7. To exit the TV menu, select the EXIT icon and press **OK**.

Selecting your TV Menu Language

1. Press **Menu** to enter the TV menu.
2. Select **Setup**.
3. In the **Setup** menu, select **Language** and select the language that you want the TV menu to appear in.

Input Select TV Menu

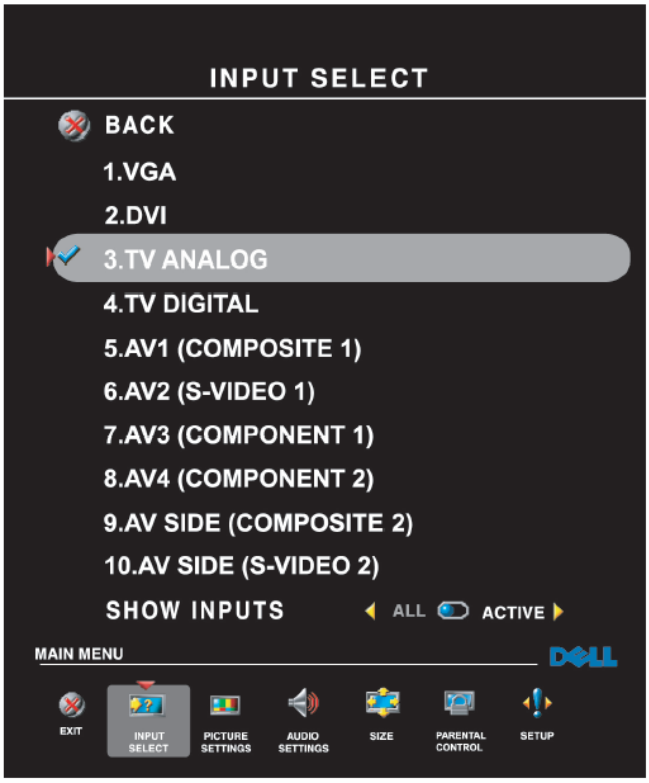

The **Input Select** menu allows you to select the proper source based on how you have your TV diaplay and video equipment connected. Press **Input** on the remote to go directly to the **Input Select** menu. You can also press **Menu** and select **Input select** from the main menu.

VGA – Select when your TV display is being used as a computer monitor and you have connected the computer using a VGA cable.

DVI – Select when your TV display is being used as a computer monitor and you have connected the computer or when you have connected a device, such as a DVD player using the DVI cable.

TV Analog– Select when you have your analog antenna or cable TV box connected to the NTSC/Analog Cable connector.

TV Digital– Select when you have your digital antenna or cable TV box connected to the HDTV/Digital Cable connector.

AV1 (Composite1) – Select when you have a video device, such as a video game system, connected to the composite connector .

AV2 (S-Video 1) — Select when you have a video device, such as a VCR, connected to the Svideo connector on the side of the wide LCD monitor.

AV3 (Component 1) — Select when you have a video device, such as a DVD player, connected to the component connector.

AV4 (Component 2) – Select when you have a video device, such as a DVD player, connected to the component connector.

AV SIDE (Composite 2) – Select when you have a video device, such as a video game system, connected to the composite connector on the side of the TV display.

AV SIDE (S-Video 2) – Select when you have a video device, such as a VCR, connected to the S-Video connector on the side of the TV display.

SHOW INPUTS – Show Inputs allows you to select **Active** or **All**. Active automatically searches the connected input sources. The available input sources appear in white and input sources that are not available appear in grey. All shows all the input sources and allows you to select all the input sources even if you do not have a device connected.

Picture Settings Menu

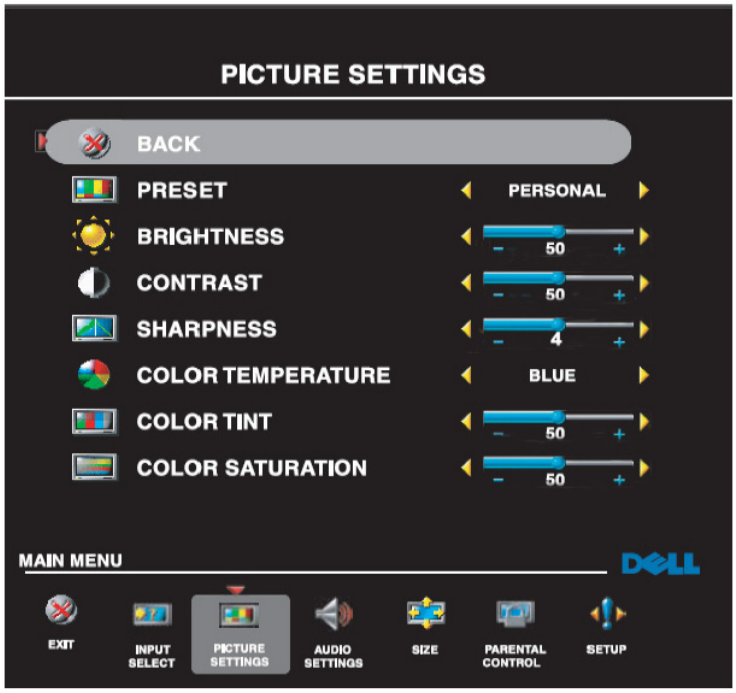

The picture settings menu allows you to adjust the appearance of the image including color and brightness. If you select one of the following preset image setting, the individual setting are automatically updated.

- Movies
- Sports
- Weak Signal
- Multimedia

If you select **Personal**, you can adjust the individual setting, such as **Brightness** and **Color**.
The color temperature presets are: Natural: 6500K
Normal: The native panel temperature: Blue: 9300K Red: 5700K

Audio Setting

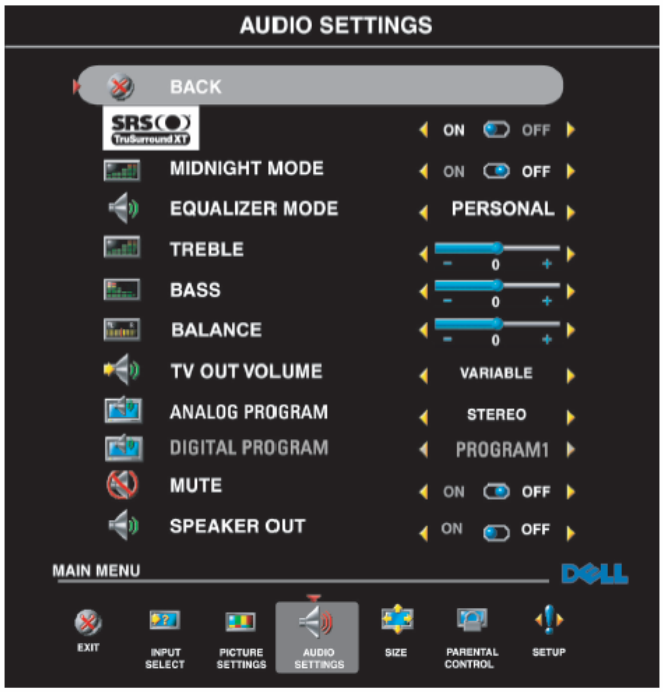

The audio menu allows you to set the audio to best fit the type of show you are watching.

SRS Trusurround XT – Delivers virtual surround sound over two speakers from any source, which creates a wider sound with deep rich bass.

MIDNIGHT MODE – Evens out the large volume variations between voice and action scenes. If you select one of the following preset Equalizer Mode settings, the individual audio levels are automatically updated:

- Music
- Theater
- Voice

If you select Personal, you can adjust the individual audio levels, such **as Bass** and **Treble**.
Use **Program** to select Stereo, SAP, or Mono.

Size Menu

Size allows you to adjust the appearance of the image. Use **Horizontal shift** to adjust the horizontal placement of the image.

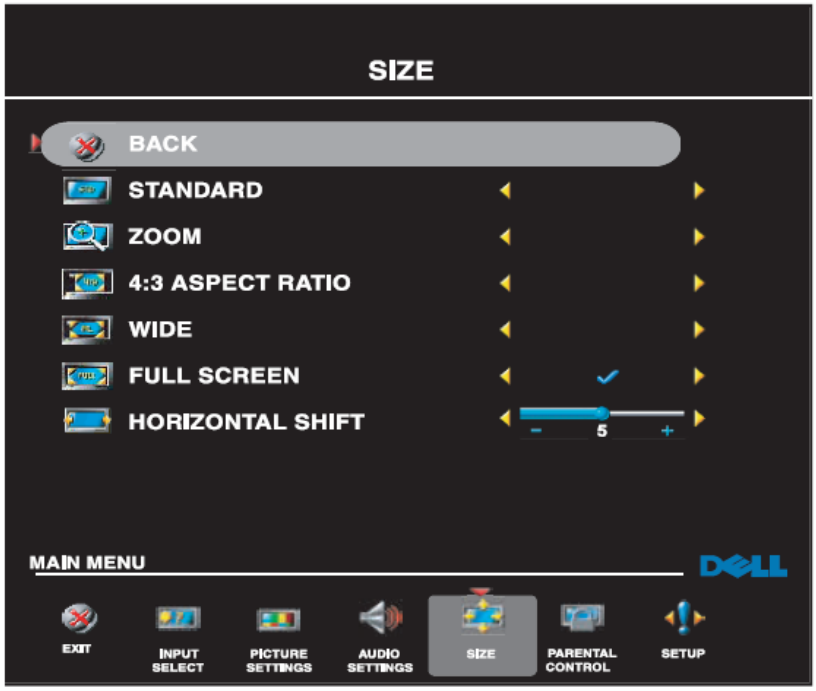

Use the following setting to adjust the aspect ratio:

STANDARD – Best selection for viewing digital HDTV, 16:9 or 22:9 DVD movies.

ZOOM – Best selection for viewing TV VCR or 4:3 DVD movie.

4:3 – Best selection for viewing TV, VCR or 4:3 DVD movie.

WIDE – Best selection for viewing digital HDTV, 16:9 or 22:9 DVD movies.

FULL SCREEN –Best selection for viewing digital HDTV, or 16:9 DVD movies.

Parental Control

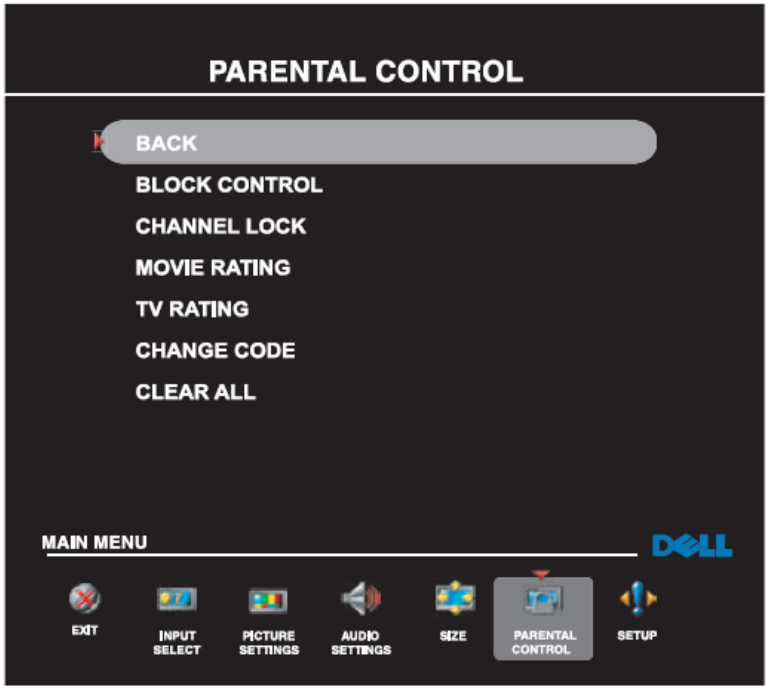

Parental Control allows you to restrict access of inappropriate channels and programs to children.

To enter the Parental Control menu, you need an access code. The first time you enter, use access code 3355.

You can set the following options to block content:

Channel Lock- Blocks selected channels

Movie Rating- Block movies based on their rating (C, PC, PC-13, R, NC-17, and X)

TV Ratings- Blocks TV shows based on their rating

Block Control- Turns on or off all your parental control settings

Setting an Access Code

After you enter the Parental Control menu for the first time, you can set your own four-digit access code. If for any reason you lose or forget your access code, you can press channel down and volume decrease simultaneously.

1.In the Parental Control menu, select Change Code.

2 Using the number pad on the remote control, enter a new access code.

3 Select Exit.

Setup Menu

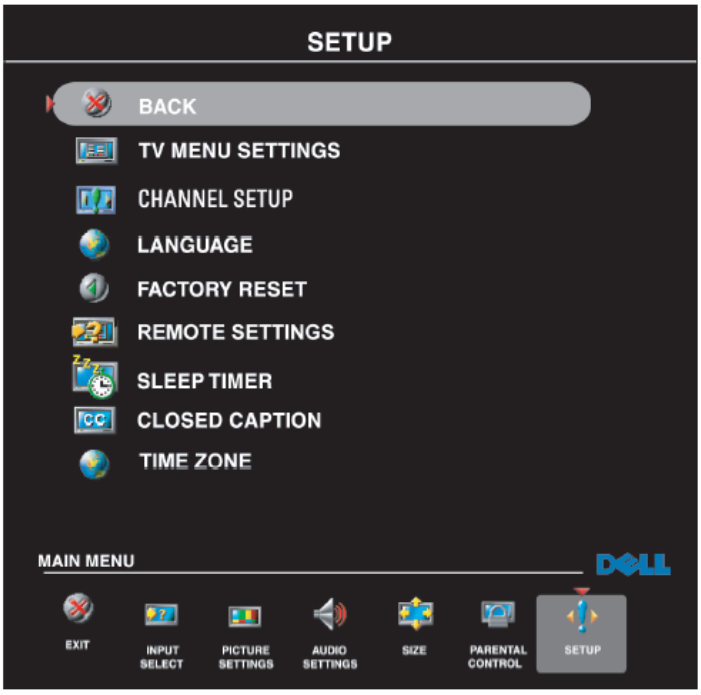

TV Menu Setup allows you to adjust the appearance of the TV menu, to change the language of the TV menu and to restore factory settings.

Use **TV Menu Hold Time** to increase or decrease the amount of time the TV Menu appears. The maximum amount of time is 60 seconds.

In the **TV Menu Settings** you can select **TV Button lock** to lock the TV Menu and the side panel buttons.
When this option is enabled, only the power button functions. To unlock the TV Menu and side panel buttons:

1. Press the Menu button on the TV.
   A message appears stating that the TV is locked.

2. While the message is on the TV, press the channel up and volume increase button simultaneously.

Seting Your Channel Setup

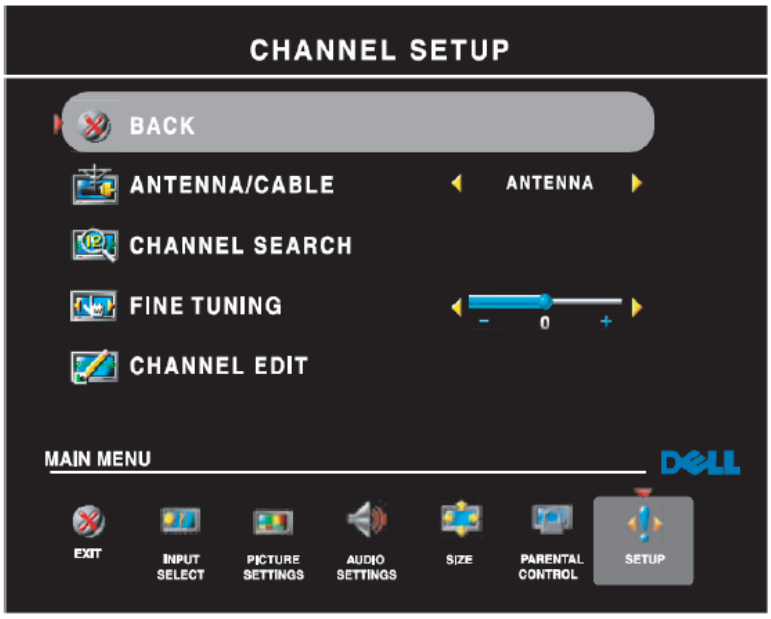

Your TV is set to automatically detect whether you are using an antenna or cable and then set the available channels. Some cable providers use an older cable standard that the TV cannot automatically detect. If you have your TV connected but can onlyview channels 5 and 6, complete thefollowing steps:

1 Press the **Menu** button on the remote control, or TV to enter the TV Menu.

2 Select **Setup** and then select **Channel Setup.**

3 In **Channel Setup**, select **Antenna/Cable**, and then toggle to **Cable**.

4 If selecting **Cable** does not resolve the issue, repeat steps 1 through step 3 using each available **Channel Setup** option (**HRC, IRC,** and **Antenna)** until you can view all channels.

Sleep Timer

Sleep Timer allows you to select an increment of time after which the TV display turns off automatically. You can select from 10 minutes to 3 hours.

Closed caption

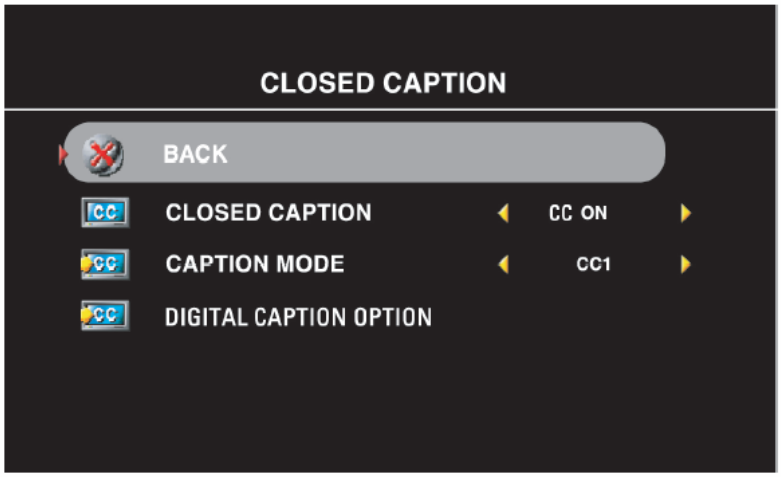

In the **Closed Caption** menu, you can select On, Off, or Mute. If you select Mute, CC automatically displays when you use the **Mute** button on the remote control.

You can choose from the following modes:
•CC1 through CC4 and TXT1 through TXT4 (CC1, CC2, and CC4 offer standard C1osed Captioning and CC3 provides closed captioning in a secondary language.)

2.4 Connecting LCD TV Display

The LCD TV display has four standard connectors that can be used to connect devices.

Note: Before you connect your LCD TV display, ensure you have all the proper cables. Some cables may come with the device you are connecting.

Quality	Cable and Connector	When to use
Good		Coaxial (RF) carries the video and audio from one cable. The coaxial connector is labeled, ANT/Cable on your wide LCD monitor.
Good	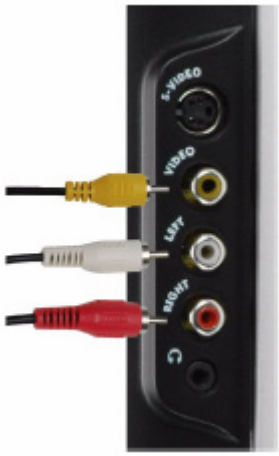	Composite carriers the video signal through a single pin. If you are using a composite video connector you also need to connect composite audio connectors.
Better		S-Video splits the video signal into two signals, black-and-white and color.
Best		Component splits the video signal into three signals, two color and one black-and-white.

Connect LCD TV to computer

The LCD TV display has two standard connectors that can be used to connect your computer.

Note: The type of connector you use depends on the graphics card your computer supports. For additional information about graphic cards, see your computer documentation.

Quality	Cable and Connector	When to use
Good		A standard graphic display system for computers that uses an analog signal and can support resolutions up to 1360 x 768.
Better		A digital signal that can support digital and convert analog to digital. DVI can be used for high resolutions display and can support resolutions up to 1360 x 768. Connect the audio cable from your computer to the wide LCD monitor Audio connector for VGA or DVI.

Using NTSC/Analog and HDTV/Digital

1. Turn off the TV display and unplug the power cord.
2. Connect the coaxial cable to the NTSC/Analog Cable connector of the TV display.
3. Plug in the power cord for the TV display and turn on the TV display.
4. Enter the TV menu and select **TV Analog**.

1. Turn off the TV display and unplug the power cord.
2. Connect the coaxial cable to the HDTV/Digital Cable connector of the TV display.
3. Plug in the power cord for the TV display and turn on the TV display.
4. Enter the TV Menu and select **TV Digital**.

3. Input/Output Specification

3.1 Input Signal connector

This procedure gives you instructions for installing and using the LCD TV display.
Position the display on the desired operation and plug the power cord into a convenient AC outlet. Three-wire power cord must be shielded and is provided as a safety precaution as it connects the chassis and cabinet to the electrical conduct ground. If the AC outlet in your location does not have provisions for the grounded type plug, the installer should attach the proper adapter to ensure a safe ground potential.

Connect the 15-pin D-SUB or 24-pin DVI color display shielded signal cable to your signal system device and lock both screws on the connector to ensure firm grounding. The connector information is as follow:

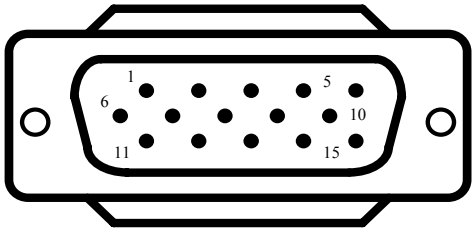

15 - Pin Color Display Signal Cable

PIN NO.	Description	PIN NO.	Description
1	Red Video	9	No Pin!
2	Green Video	10	Sync Ground
3	Blue Video	11	Not Used
4	Not Used	12	Serial Data for DDC
5	Ground	13	H-Sync.
6	Red Ground	14	V-Sync.
7	Green Ground	15	Serial Clock for DDC
8	Blue Ground		

Apply power to the display by turning the power switch to the "ON" position and allow about ten seconds for Panel warm-up. The Power-On indicator lights "GREEN" when the display is on.

With proper signals feed to the display, a pattern or data should appear on the screen, adjust the brightness and contrast to the most pleasing display, or press auto-adjust to get the best picture-quality.

This TV (with PC function) has power saving function following the VESA DPMS. Be sure to connect the signal cable to the PC.

If your TV requires service, it must be returned with the power cord.

3.2 Factory Preset Display Modes:

Mode	Resolution	Refresh Rate (Hz)	Horiz. Freq. (Khz)	RefreshRate (Hz)	Horiz.Freq. (Khz)
		Analog		Digital	
A	640 x 350	70	31.47	70	31.47
B	640 x 400	70	31.47	70	31.47
C	640 x 480	60	31.47	60	31.47
D	640 x 480	75	37.50	75	37.50
E	720 x 400	70	31.47	70	31.47
F	800 x 600	60	37.88	60	37.88
G	800 x 600	75	46.88	75	46.88
H	1024 x 768	60	48.36	60	48.36
I	1024 x 768	70	56.5	70	56.5
J	1024 x 768	75	60.02	75	60.02
K	1280 x 768	60	47.78	60	47.78
L	1280 x 1024	60	63.98	60	63.98
M	1360 x 768	60	47.72	60	47.72
Video Formats					
1	720x480i	60	15.734	60	15.734
2	720x480P	60	31.5	60	31.5
3	720x576i	50	15.625	50	15.625
4	720x576P	50	31.25	50	31.25
5	1280x720P	60	45	60	45
6	1280x720P	50	37.5	50	37.5
7	1920x1080i	60	33.75	60	33.75
8	1920X1080i	50	28.125	50	28.125

4. EDID Program Instruction

4.1 Tools And Software

a. DDC Writer board
b. PC
c. LPT cable
d. adapter (12V)
e. WinDDC.exe---DDC Writer software
f. barcode.txt---the length of the barcode
g. barcode example.txt
h. check.dat
i. config.ini
j. R.DAT
k. W2607C Analog&Digital EDID.doc ---The EDID code and content
L. W2607C.ddc
m. W.DAT

Note: The OS(Operating System could't be in Win98)
Picture as shown below for your reference.

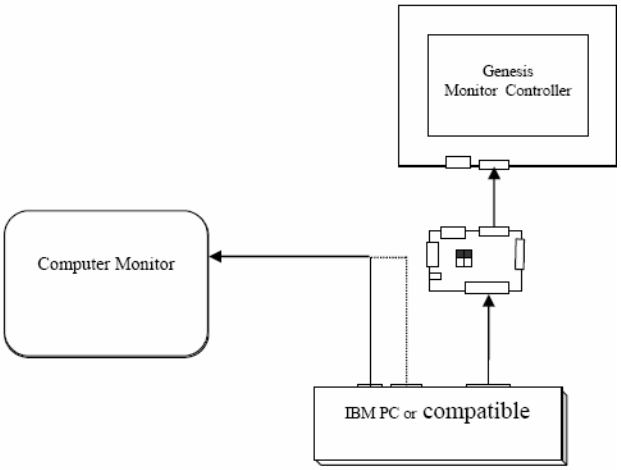

VGA DDC writer

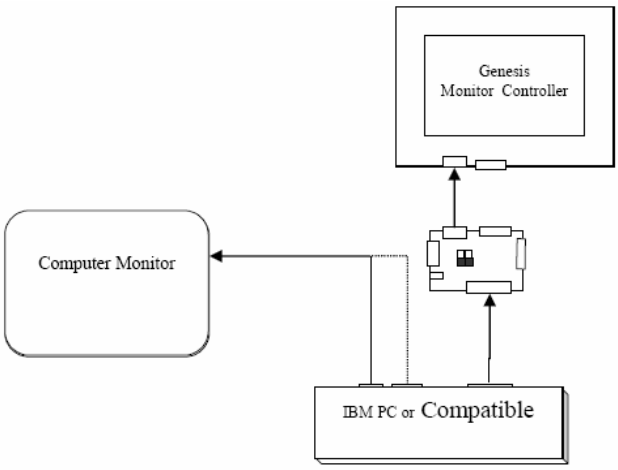

DVI DDC writer

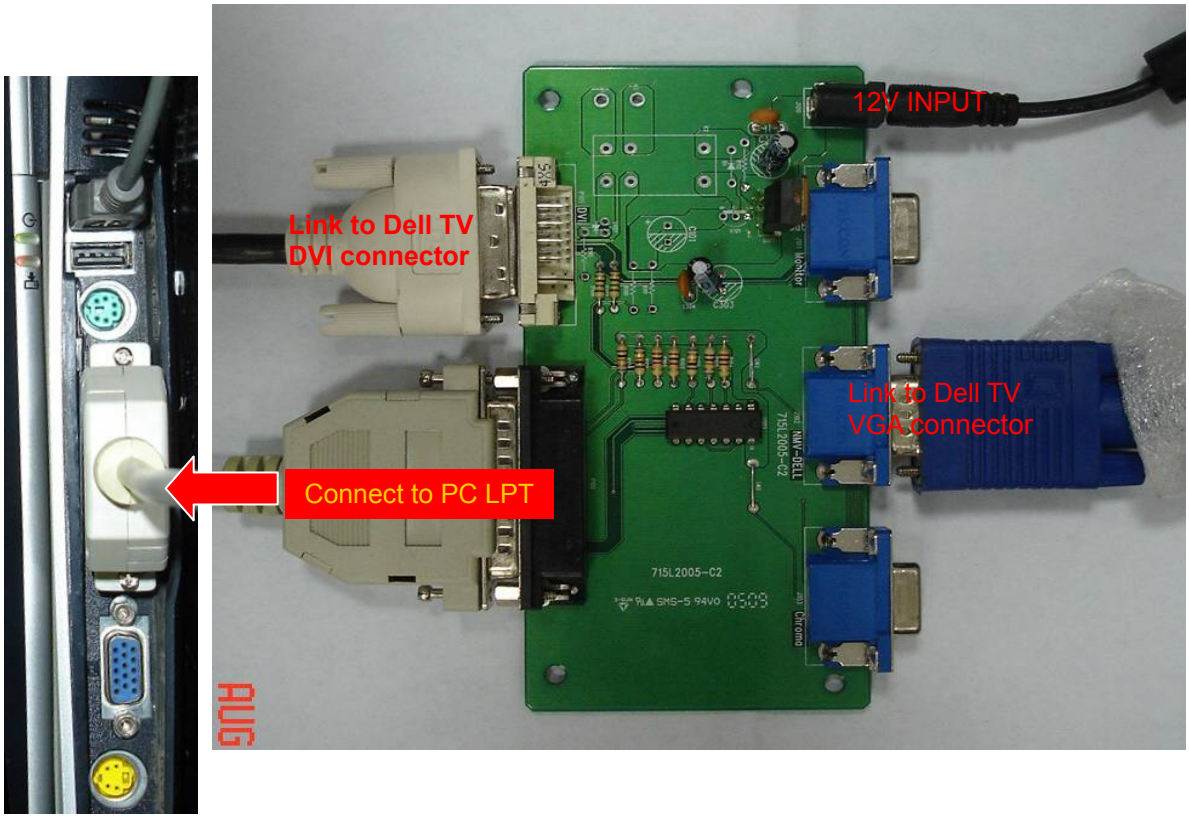

Note: VGA and DVI must not connect at the same time.

4.2 Run DDC writer program

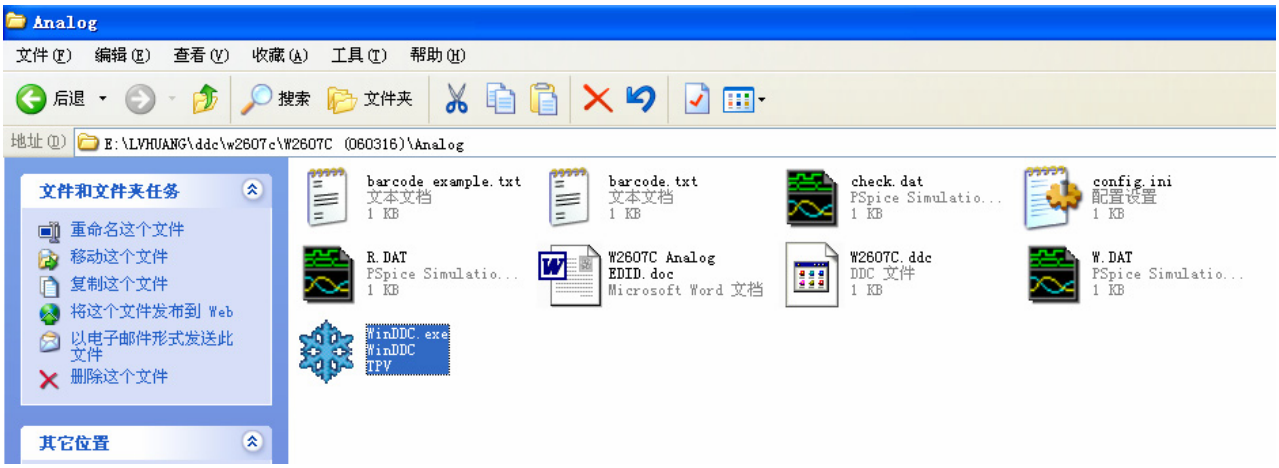

(1) Double-click “WinDDC.exe”; it will appear the figure below:

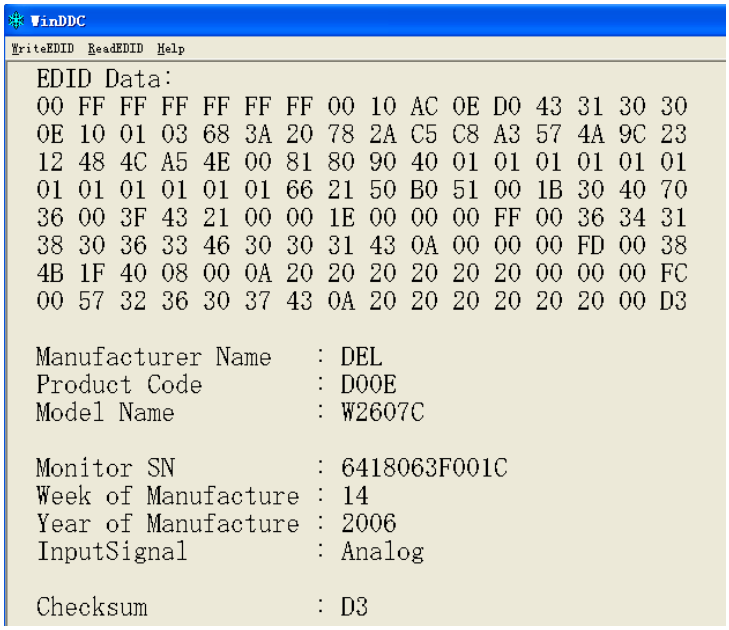

(2) Click “WriteEDID”, it displays the following textbox. Input the Serial Number printed on the barcode label.

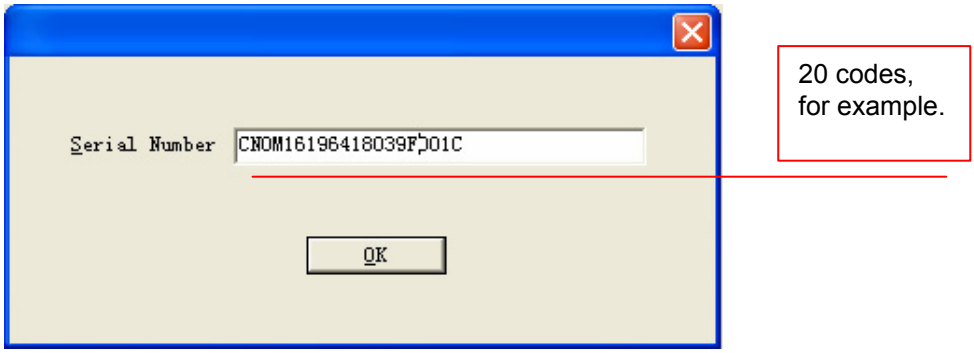

(3) Click “OK”.

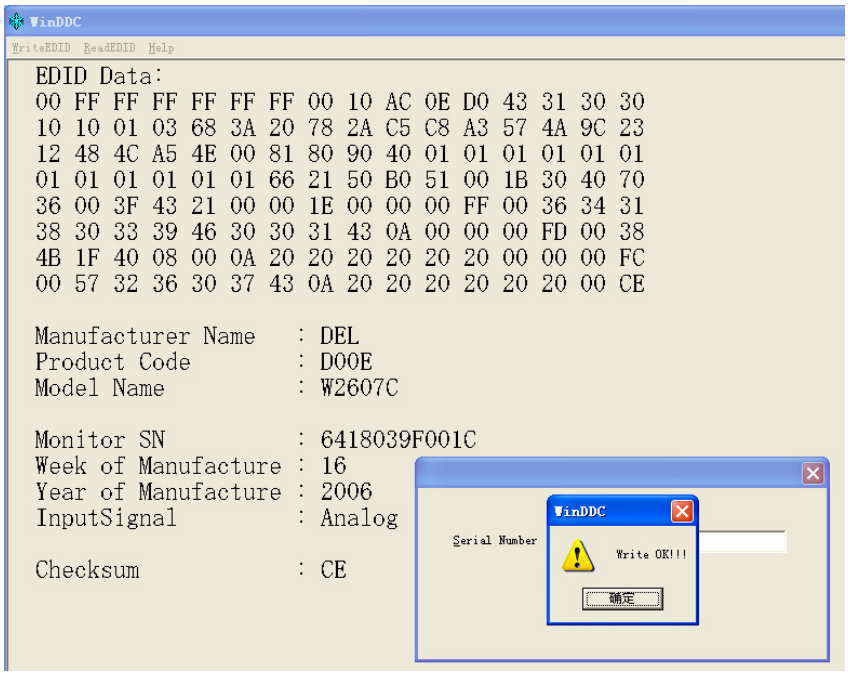

The process of DVI DDC writer is the same as VGA writer process!

5. Firmware Update Instruction

5.1 Tools And Software

a. USB cable
b. USB drive
c. Application code xxxx.upg- The TV firmware code, with .upg extension.
d. NVM bin file (when needed)-New NVM binary code, with .upg extension.
e. Nvmtool_encr_64Mbusb11_dev.upg (when needed)-used to upgrade NVM bin file, only needed when release come with new NVM bin file.
f. Upgrade application (when needed)- the upgrade firmware, with .upg extension.

5.2 Installation

5.2.1 Install firmware codes on your USB flash HD.

a. Create the following folder in root directory of USB drive: upgrades.
b. TV and upgrade firmware code (xxxx.upg) should be save under upgrades folder
c. In case need to update NVM bin file, place **nvmtool_encr_64MBusb11_dev.upg** under upgrades folder, and rename NVM bin file to **NvmCopyfromUsb.bin** and place in root / directory

5.2.2 Install Hardware

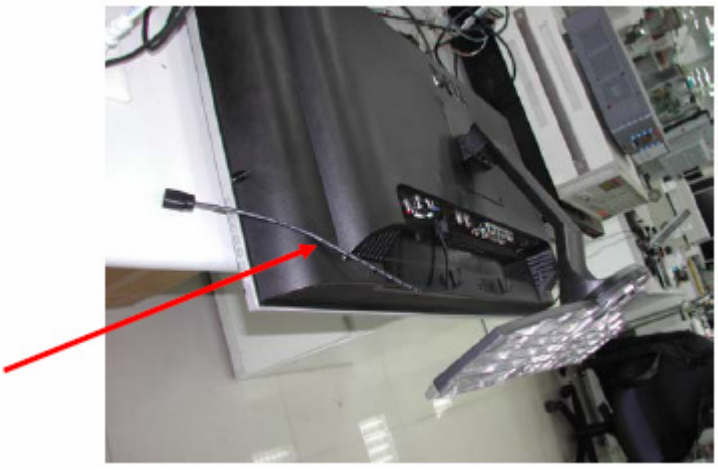

a. Inserted the USB cable to Mini USB connector of the TV.
b. Connect USB flash HD to USB cable.

5.2.3 Install NVM bin procedure (When Needed)

1. Insert AC power cord while press the “CH ▼” key of remote control (Illustration 1). Hold the key till upgrade application shows up (Illustration 2).
2. Press VOL+ , VOL- , CH▼ , CH▲ remote control keys to select **nvmtool_encr_64MBusb11_dev.upg** then

press OK key, select Yes then press OK.
3. Update progress will show upgrade process
4. When upgrade complete, unplug the AC power cord.

5.2.4 Install Upgrade application or TV Firmware procedure

Illustration 1

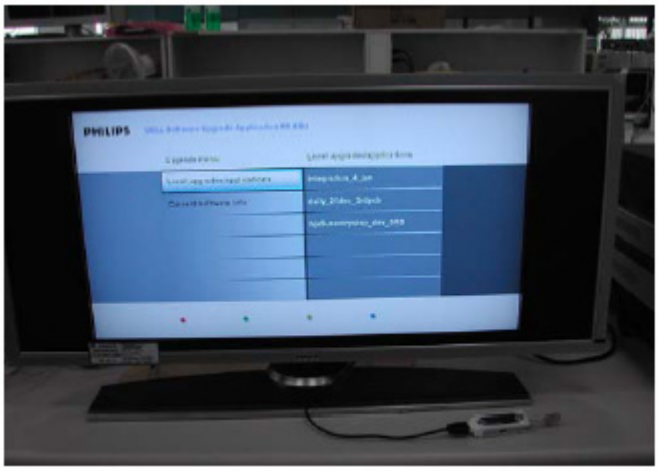

Illustration 2

1. Insert AC power cord while press the “CH ▼” key of remote control (Illustration 1). Hold the key till upgrade application shows up (Illustration 2).
2. Press VOL+ , VOL- , CH▼ , CH▲ remote control keys for select the firmware then press OK key, select Yes then press OK. (You MUST download the upgrade application 1st if it comes with the release, prior to upgrade the TV firmware)
3. Update progress will show upgrade process
4. When upgrade complete, unplug the AC power cord.

6.Definition Of Pixel Defects

6.1 Dot Defect

6.1.1 Bright Dot

Bright dot is defined as Dots (bigger than half sub-pixels), which appeared brightly in the screen when the LCM displayed with whole pattern.

- R, G or B 1 dot ---------- not allowed
- Total amount of dark dots ---------- not allowed

6.1.2 Dark Dot

Dark dot is defined as Dots (bigger than half sub-pixels) which appeared darkly in the screen when the LCM displayed with bright pattern.

- 1 dot ---------- 4 Max
- Adjacent 2 dots ---------- 1 Max
- Adjacent above 3 dots ----------not allowed
- Total amount of Dark dot ---------- 4 Max

6.1.3 Total amount of Dot Defects ---------- 4 Max (Combination)

Note) a. every dot herein means Sub-Pixel (Each Red, Green, or Blue Color)
b. Dots smaller than half sub-pixel are not counted as defect dots.
c. The dot defect is inspected on Red, Green, Blue, White or Black pattern.
d. Extraneous substances, which can be wiped out, like Finger Print, Particles, are not considered as a defect.
e. Defects which is on the Black Matrix (outside of active area) are not considered as a defect.
f. Weak bright dot (Less than 50% of sub-pixel)…….. Max 8 on 64 Gray patterns.

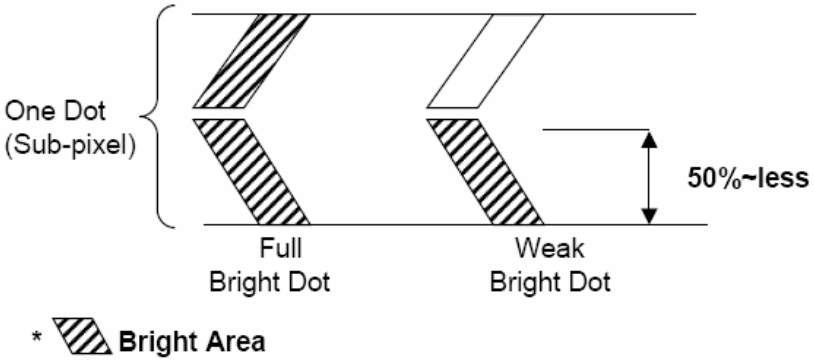

6.2. Polarizer Defects

Items	Criteria
Linear Scratch	**0.01<=W<=0.2, 0.3<=L<=5.0, N<=4**
Dot Shape Scratch	**0.2<=D<=1.0, N<=4**
Bubble/Peeling	**0.2<=D<=1.0, N<=4**

Where, W: Width
L: Length
D: Average diameter =(a+b)/2

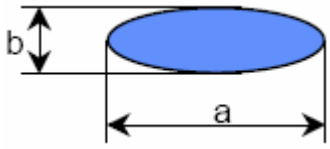

a. Average Diameter
b. Linear:
c. Extraneous substances, which can be wiped out, like Finger Print, Particles, are not considered as a defect.
d. Defects which are on the Black Matrix (outside of Active Area) are not considered as a defect.

6.3 Foreign Material

Items		Criteria
Foreign Material	Linear	0.01<=W<=0.2, 0.3<=L<=3.0, N<=4
	Circular	0.2<=D<=0.5 N<=4

Where, W: Width
L: Length
D: Average diameter =(a+b)/2

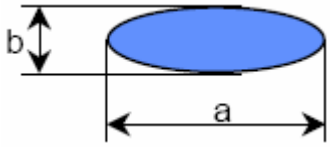

6.4 Line Defect

All kinds of line defects such as vertical, horizontal or cross are not allowed.

6.5 Bezel Appearance

Scratches, minor bents, stain, particles on the Bezel frame are not considered as a defect.

6.6 others

Issues, which are not defined in these criteria, shall be discussed with both parties, Customer and Supplier, for better solution.

7. White Balance, Luminance Adjustment

Approximately 30 minutes should be allowed for warm up before proceeding white balance adjustment.

Before started adjust white balance, please set the Chroma-7120 **MEM. Channel 3 to Natural** colors, **MEM. Channel 4 to 6500K** color, **MEM. Channel 9 to 9300K** colors and **MEM. Channel 10 to 5700K** colors (Nature parameter is x =289 ± 30, y = 304 ±30, **6500** parameter is x = 313 ± 30, y = 329 ± 30, **9300** parameter is x = 283 ± 30, y = 297 ± 30,**5700** parameter is x = 328 ± 30, y = 344 ± 30),

The data of Y of all the mode is PC>300,AV>400,S-Video>400,Component>400cd/m2.

Devices Requirement:

1. Chroma 7120, Chroma 2327.

2. AV/S-Video/Component signal generator

How to setting MEM.channel you can reference to Chroma-7120 user guide or simple use " **SC**" key and " **NEXT**" key to modify x, y, Y value and use "**ID**" key to modify the TEXT description
Following is the procedure to do white-balance adjust

- After there is no OSD pictures on screen ,Press Number key **2—4—8—6—MENU—INFO** in Remote Control will access into the factory mode.
- In the factory mode ,the menu as follows:

5700K	R、G、B	the data is the result of R、G、B after W/B adjustment;
6500K	R、G、B	
9300K	R、G、B	
NATURAL	R、G、B	
NVRAM Init →Initial EEPROM		
Burn in mode【On/OFF】		

The steps of the PC W/B adjustment as follows:

I. <u>Initial the EEPROM</u>

Press "**NVRAM Init: Press 【OK】to start"** to initial EEPROM.

<u>Bias (Low luminance) adjustment:</u>

Prepare: ensure the currently mode is PC (VGA)

Press "Auto Balance" button (the image is black and white at the PAT42)

II. Gain adjustment:

1. Switch the chroma-7120 to RGB-mode (with press "MODE" button)
2. Let the signal output the white image (press pattern 105), select one of the color temp (as Natural、6500K、9300K、5700K) and adjust factoty mode window R、G、B until up to the value Chroma7120 R, G, B=100±3.
3. Select another color temp and follows as item 2.

Ⅲ The steps of the AV W/B adjustment as follows:

The steps of AV W/B adjustment as follows:

Gain adjustment:

1. Switch the chroma-7120 to RGB-mode (with press "MODE" button)
2. Let the signal output the white image (press pattern 105), select one of the color temp (as Natural、6500K、9300K、5700K) and adjust factoty mode window R、G、B until up to the value Chroma7120 R, G, B=100±3.
3. Select another color temp and follows as item 2.

Ⅳ The steps of the SV(S-Video) W/B adjustment as follows:

The steps of SV's W/B adjustment is the same as AV's.

Ⅴ The steps of the CP(component) W/B adjustment as follows:

The steps of CP's W/B adjustment as same as PC's.

Press MENU button to quit from factory mode.

Max Brightness measurement:

a. Switch to the full white pattern, in normal mode main menu:
   Set <Picture Settings> menu **Brightness, Contrast** to the max.
b. The Minimum brightness is 400cd/m².

8. Mechanical Instructions

1. Remove Stand and base

Lay LCD-TV on a flat, soft and clean surface.
Remove 4 csrews to remove stand and base. **Fig.1**

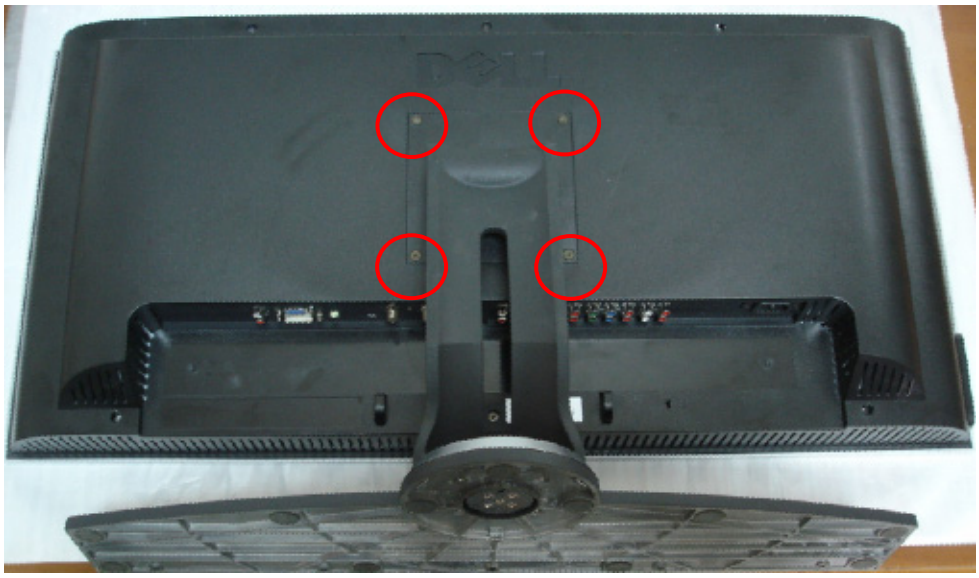

Fig. 1

2. Remove back cover Fig.2—Fig.5

(1) Remove 4 screws at the top of the back cover. **Fig.2**
(2) Remove 2 screws at the left top of the back cover. **Fig.3**
(3) Remove 2 screws at the right top of the back cover. **Fig.4**
(4) Remove the connector wire of back cover and interface board **Fig.5**

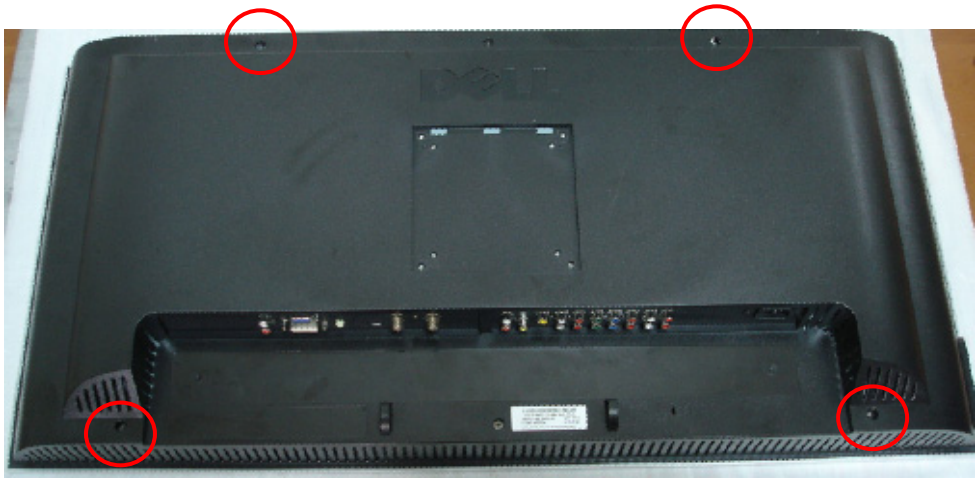

Fig. 2

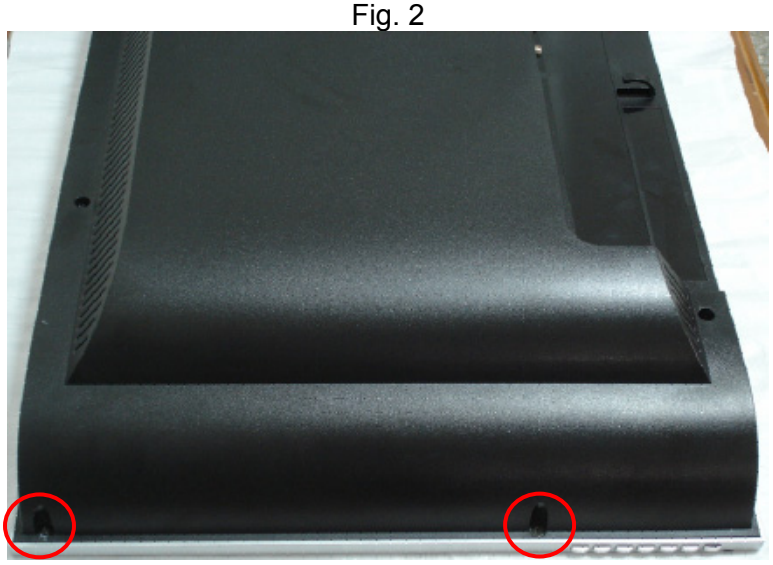

Fig. 3

Fig. 4

Fig. 5

3. Remove the shield Fig.6—Fig.9

(1) Remove 8 screws of the shield at the top and bottom shield. **Fig. 6**
(2) Remove 2 screws of the shield at the left. **Fig. 7**
(3) Remove 1 screw of the shield at the right. **Fig. 8**

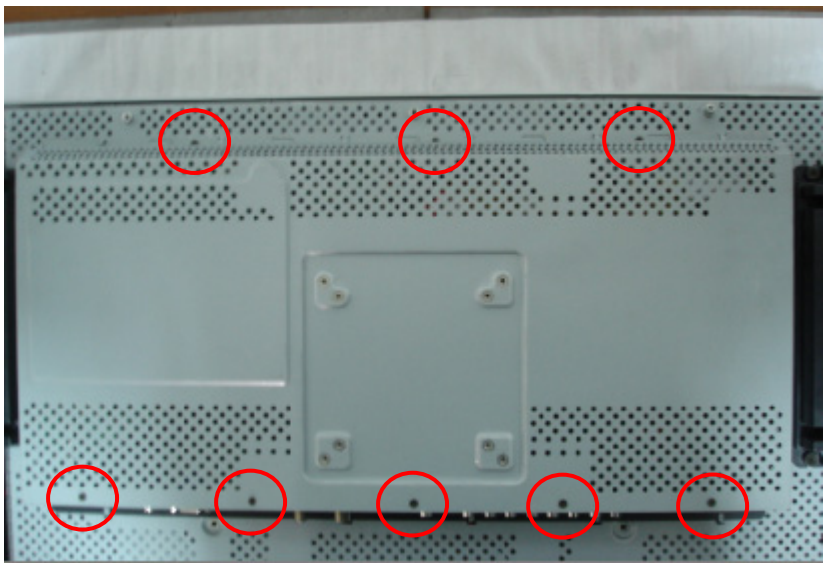

Fig. 6

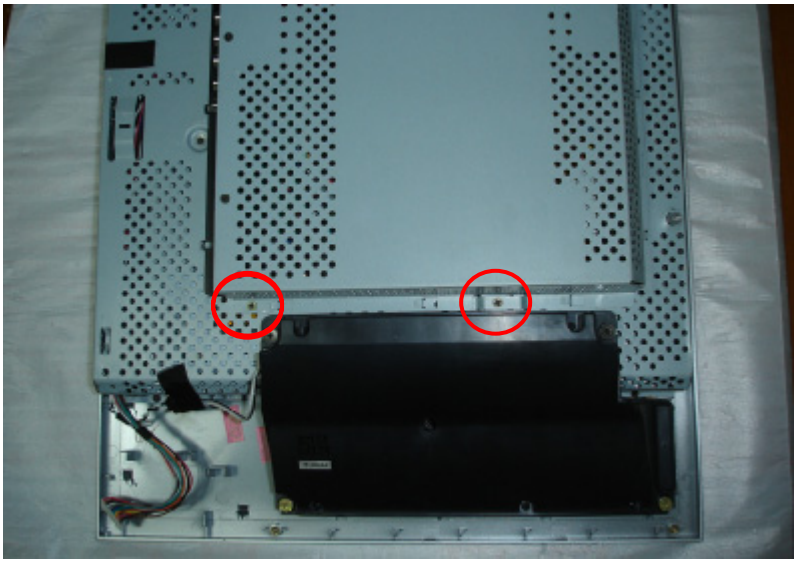

Fig. 7

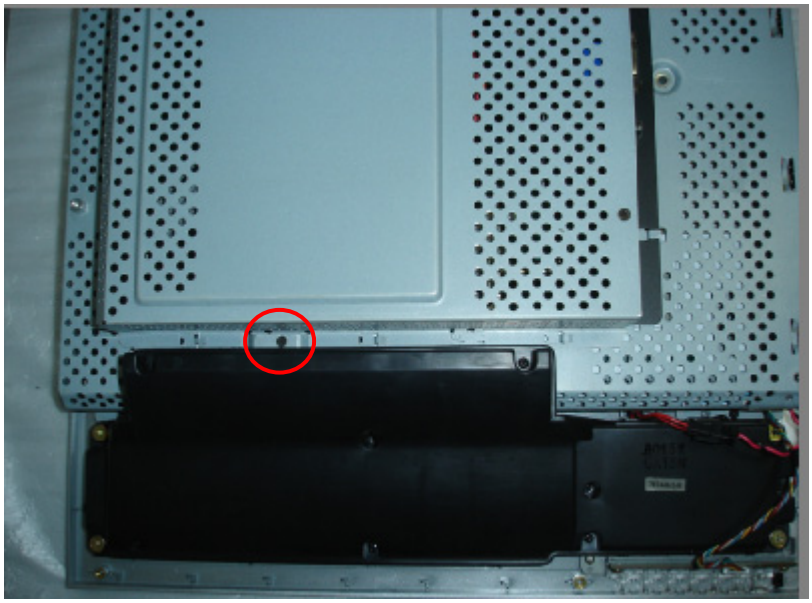

Fig. 8

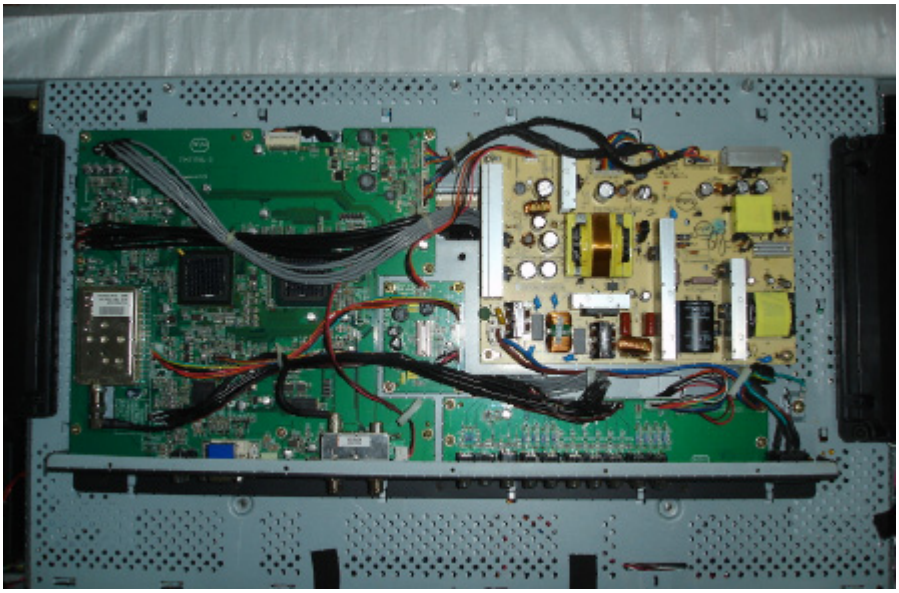

Fig. 9

4. Remove main board, power board and other board Fig. 10—Fig. 11

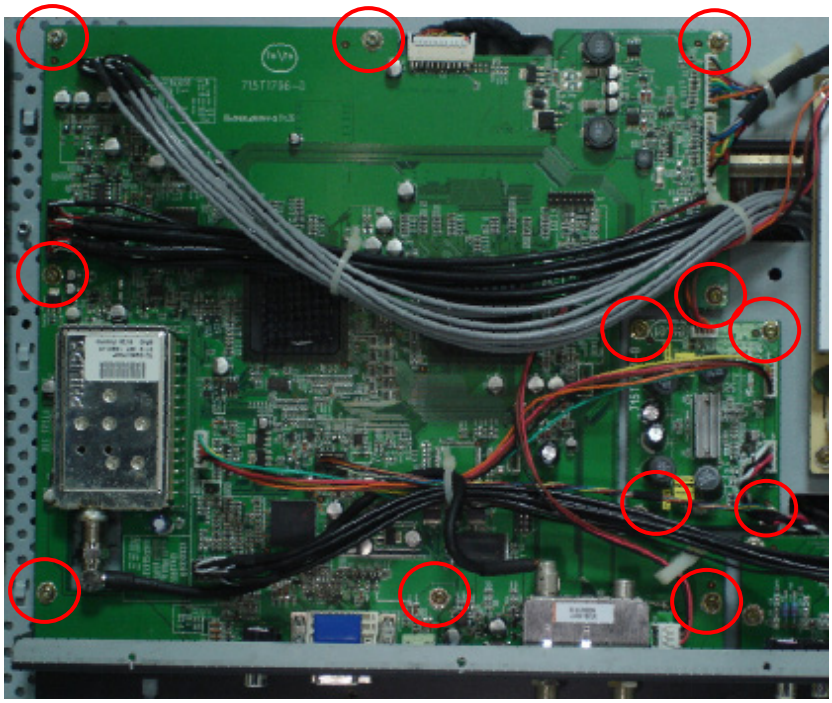

Fig. 10

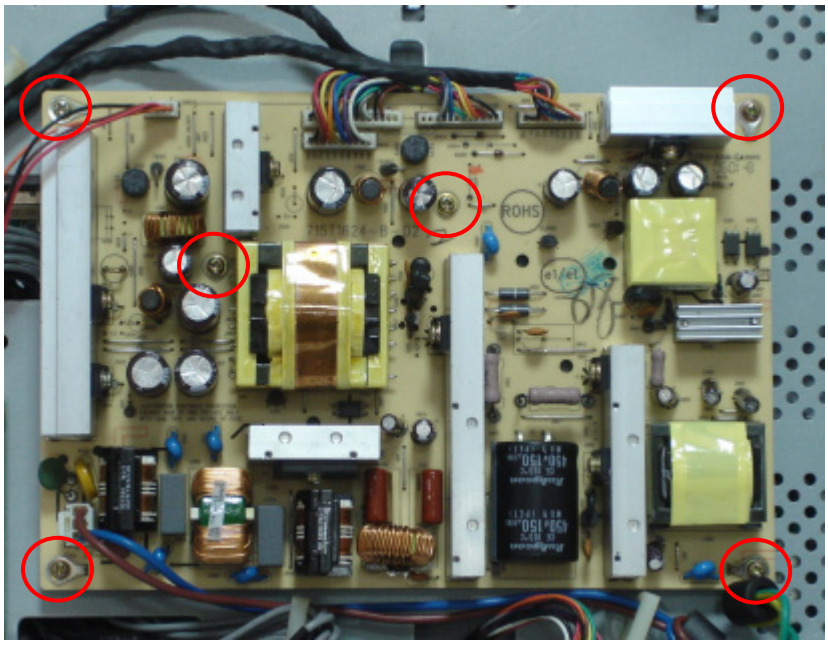

Fig. 11

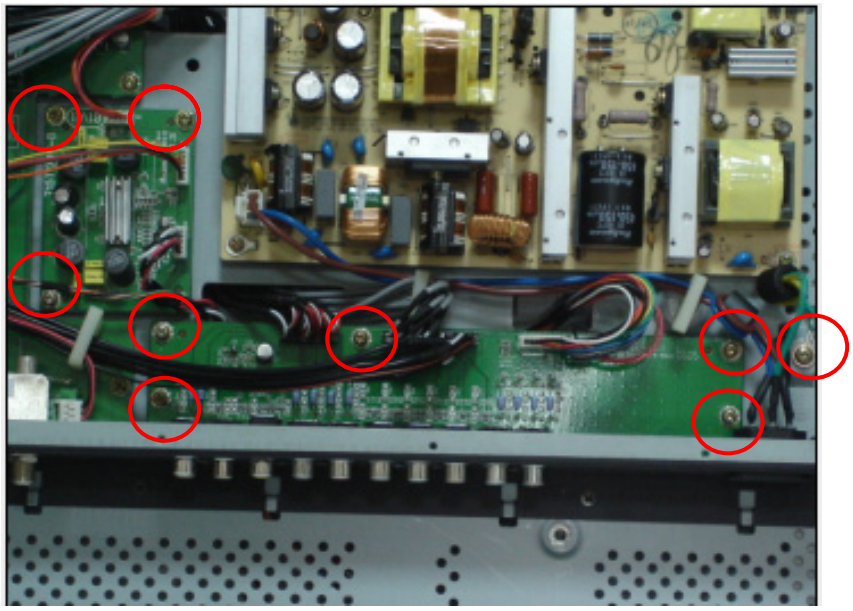

Fig.12

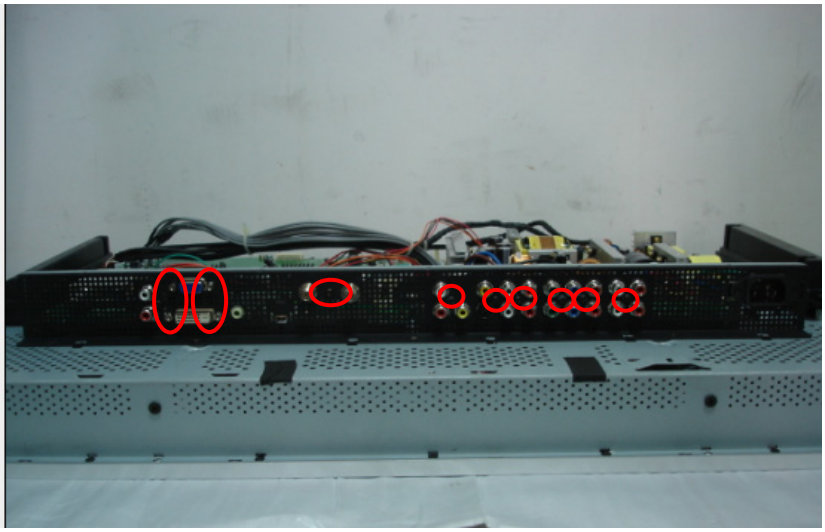

Fig.13

5.Remove the speakers

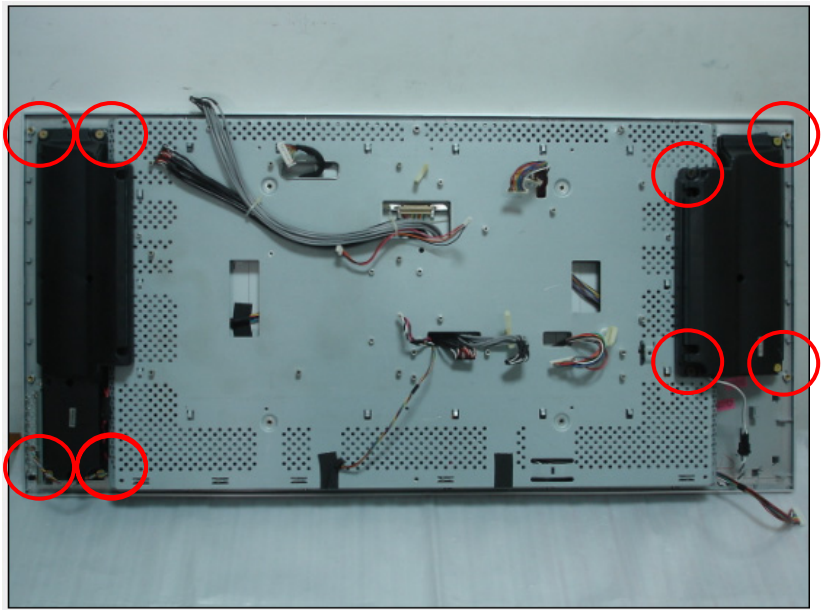

Fig.14

5. Remove the shield from the panel Fig.15- Fig.18

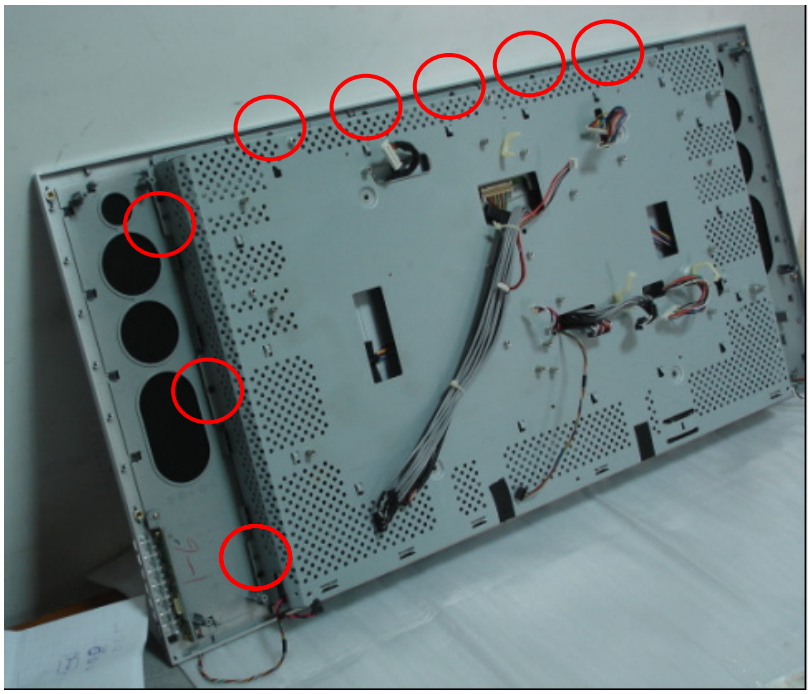

Fig.15

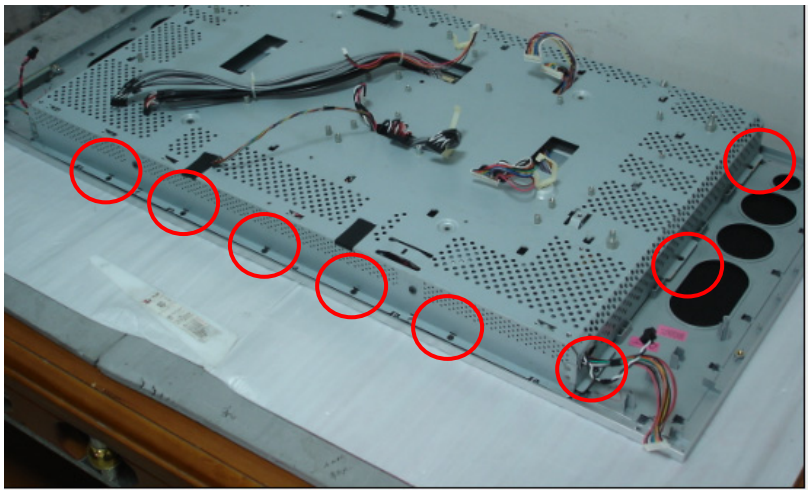

Fig.16

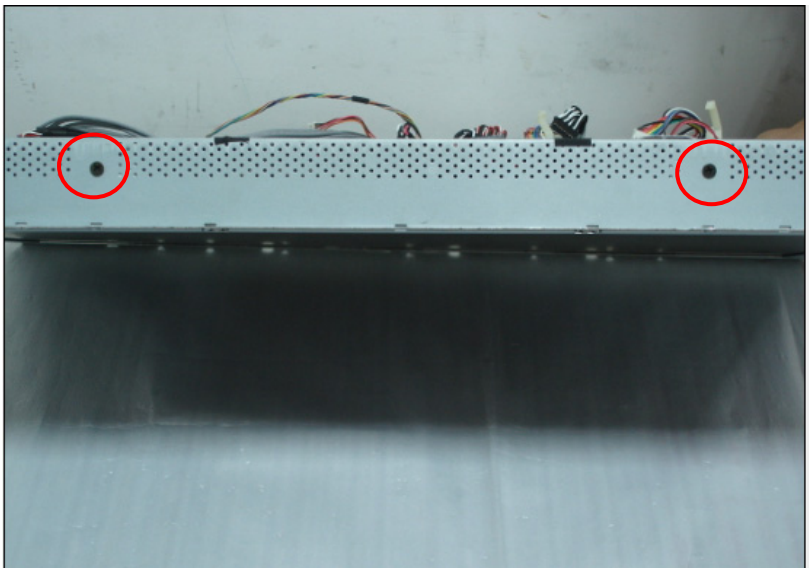

Fig.17

Fig.18

9. Repair Flow Chart

Defect Mode	Failure Analysis	Repair	Testing

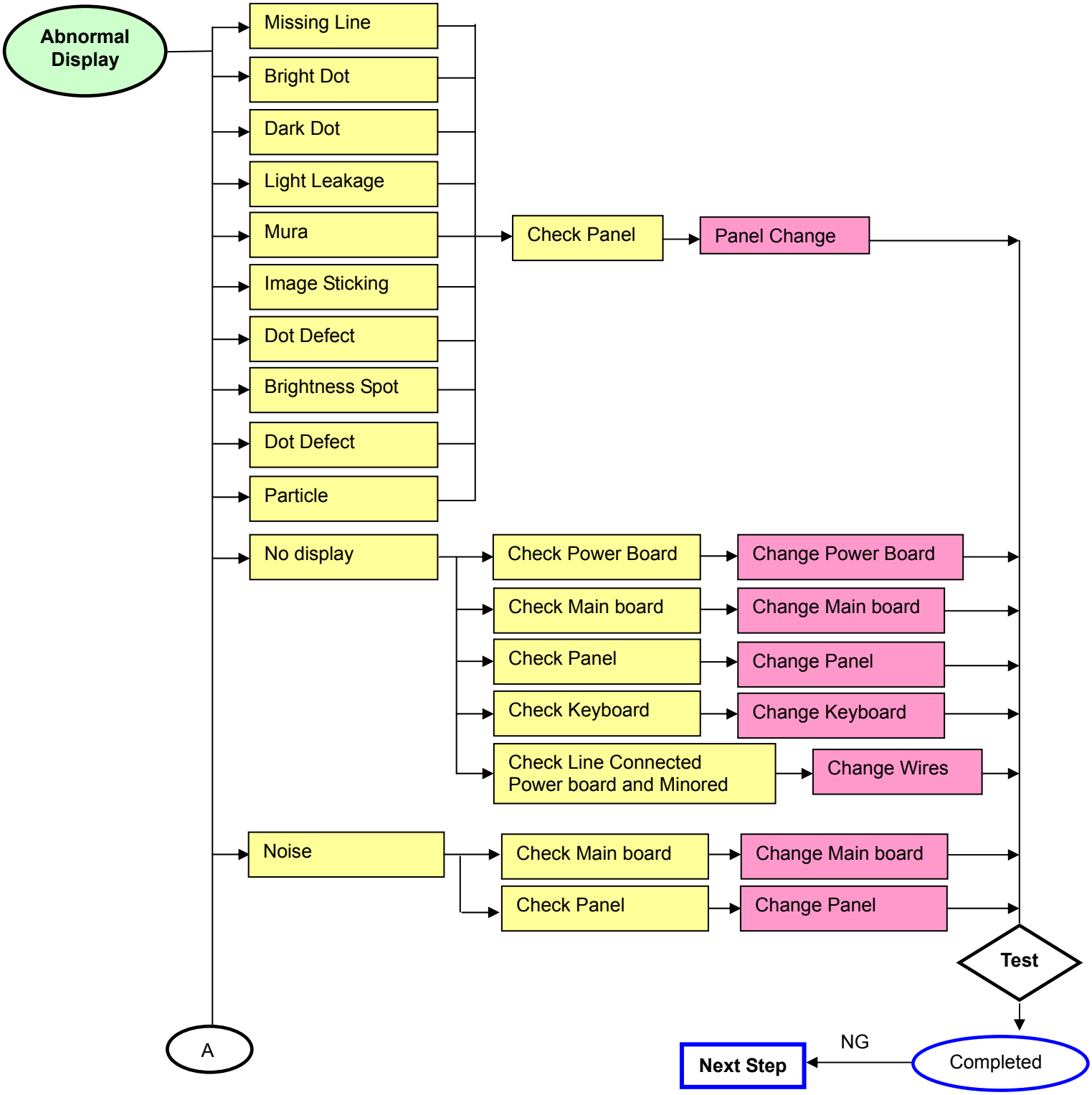

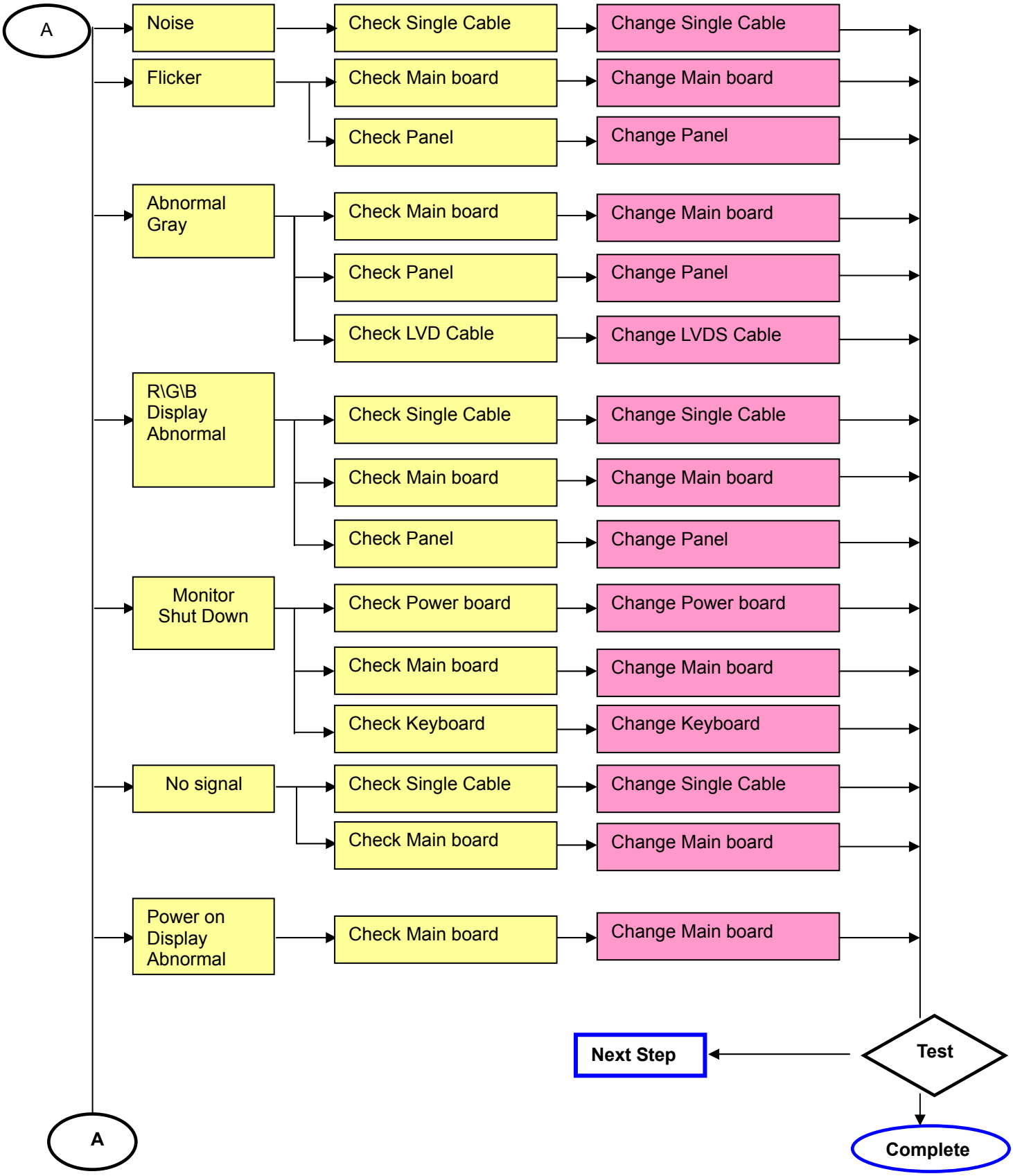
A
Noise
Check Single Cable
Change Single Cable
Flicker
Check Main board
Change Main board
Check Panel
Change Panel
Abnormal Gray
Check Main board
Change Main board
Check Panel
Change Panel
Check LVD Cable
Change LVDS Cable
R\G\B Display Abnormal
Check Single Cable
Change Single Cable
Check Main board
Change Main board
Check Panel
Change Panel
Monitor Shut Down
Check Power board
Change Power board
Check Main board
Change Main board
Check Keyboard
Change Keyboard
No signal
Check Single Cable
Change Single Cable
Check Main board
Change Main board
Power on Display Abnormal
Check Main board
Change Main board
Next Step
Test
Complete
A

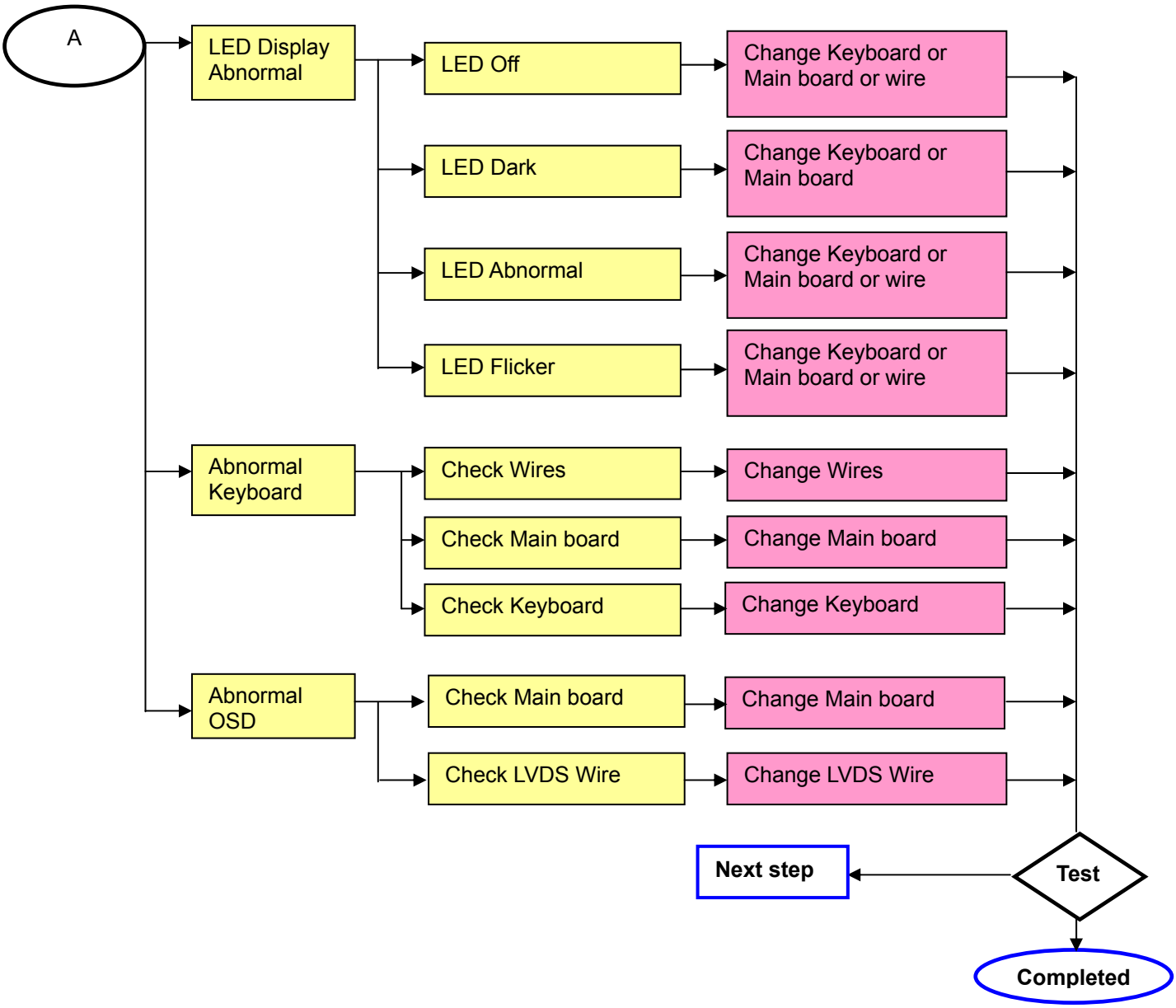
A
LED Display Abnormal
LED Off
Change Keyboard or Main board or wire
LED Dark
Change Keyboard or Main board
LED Abnormal
Change Keyboard or Main board or wire
LED Flicker
Change Keyboard or Main board or wire
Abnormal Keyboard
Check Wires
Change Wires
Check Main board
Change Main board
Check Keyboard
Change Keyboard
Abnormal OSD
Check Main board
Change Main board
Check LVDS Wire
Change LVDS Wire
Next step
Test
Completed

Key Board

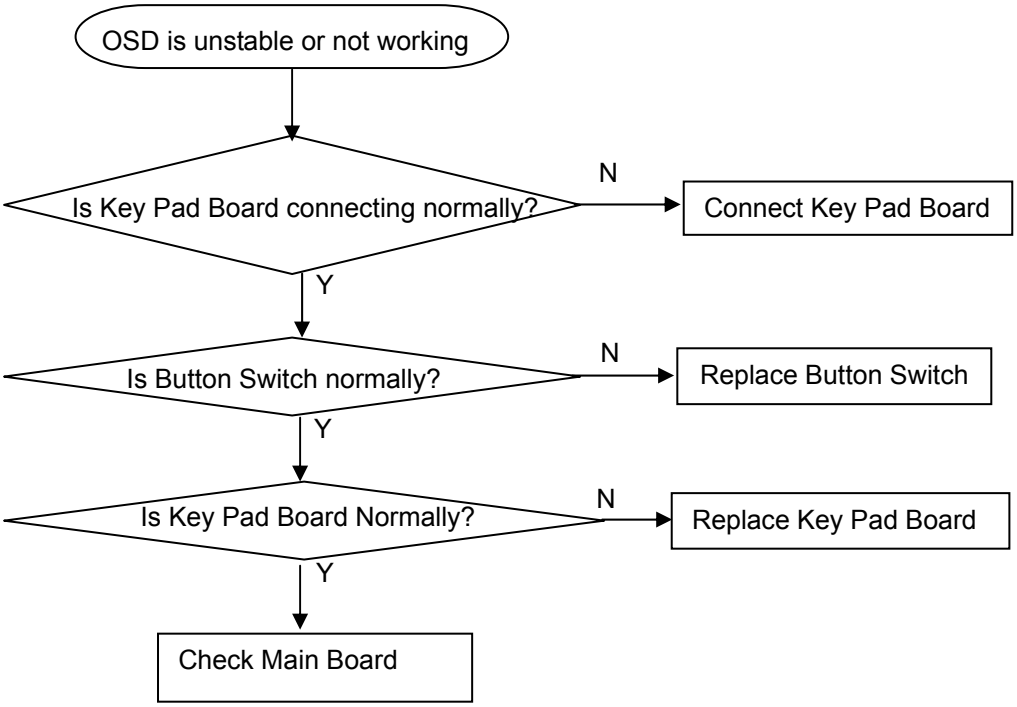
OSD is unstable or not working
Is Key Pad Board connecting normally?
N
Connect Key Pad Board
Y
Is Button Switch normally?
N
Replace Button Switch
Y
Is Key Pad Board Normally?
N
Replace Key Pad Board
Y
Check Main Board

10. PCB Layout

10.1 Main Board

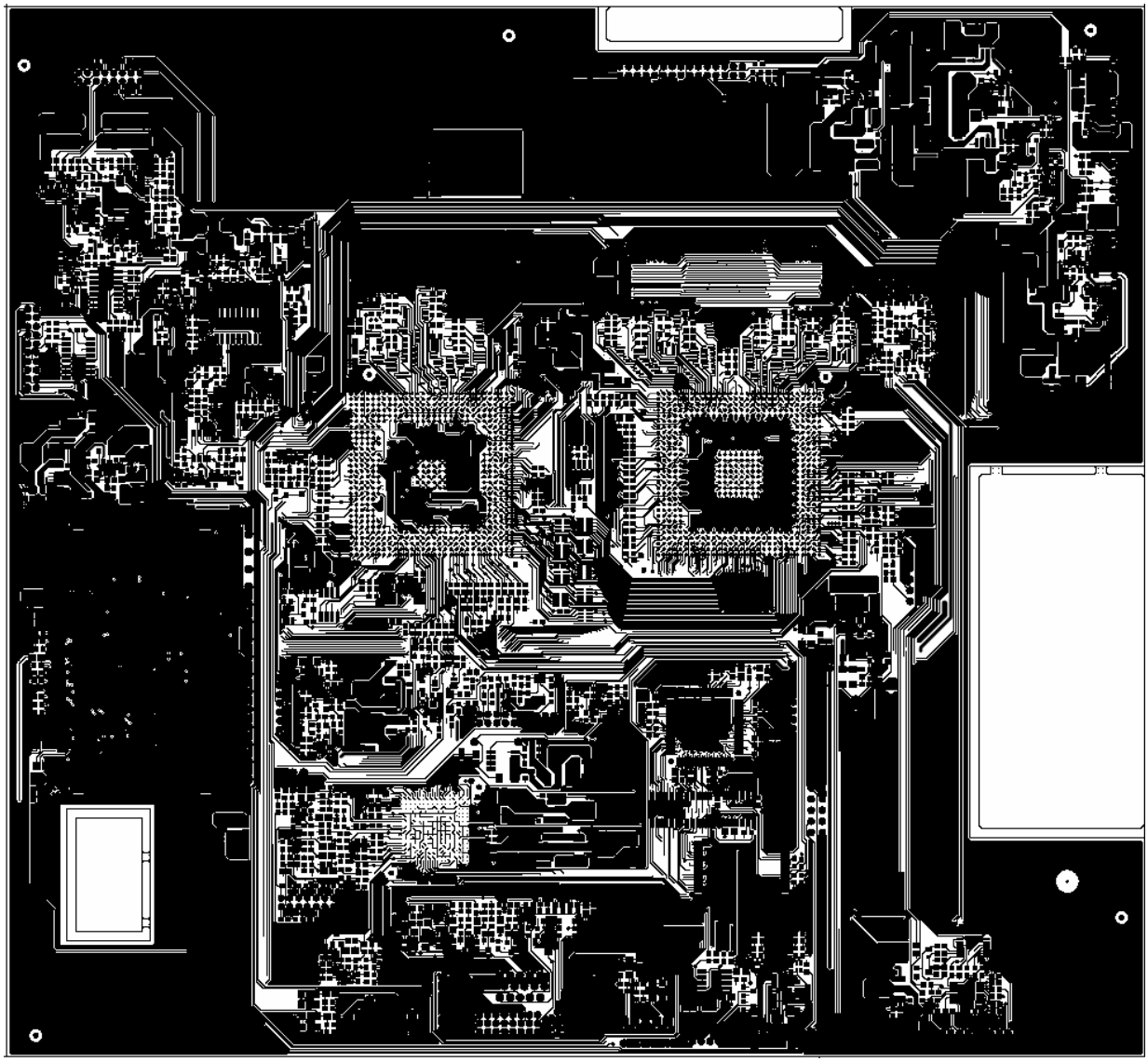

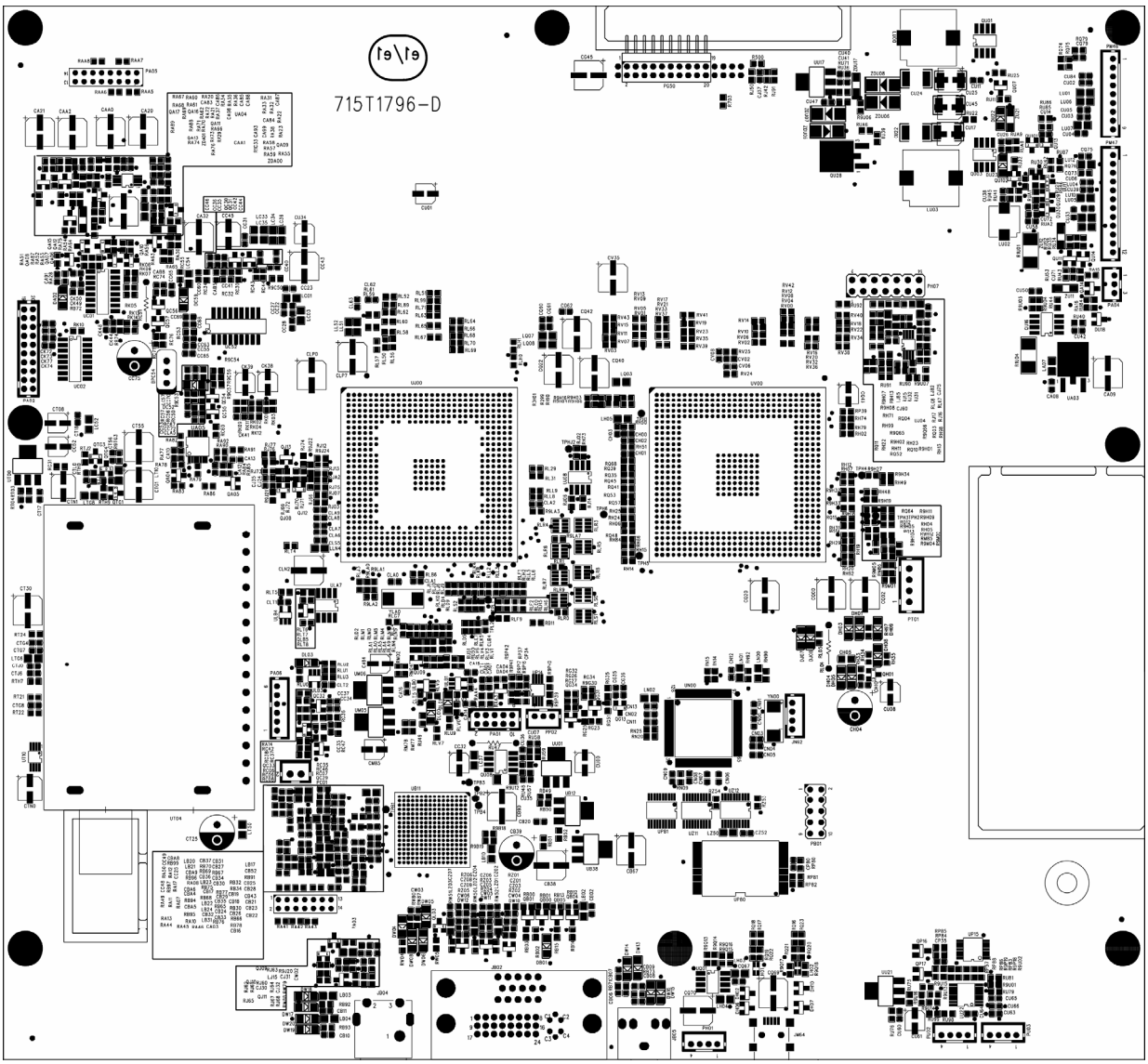
715T1796-D

10.2 Power Board

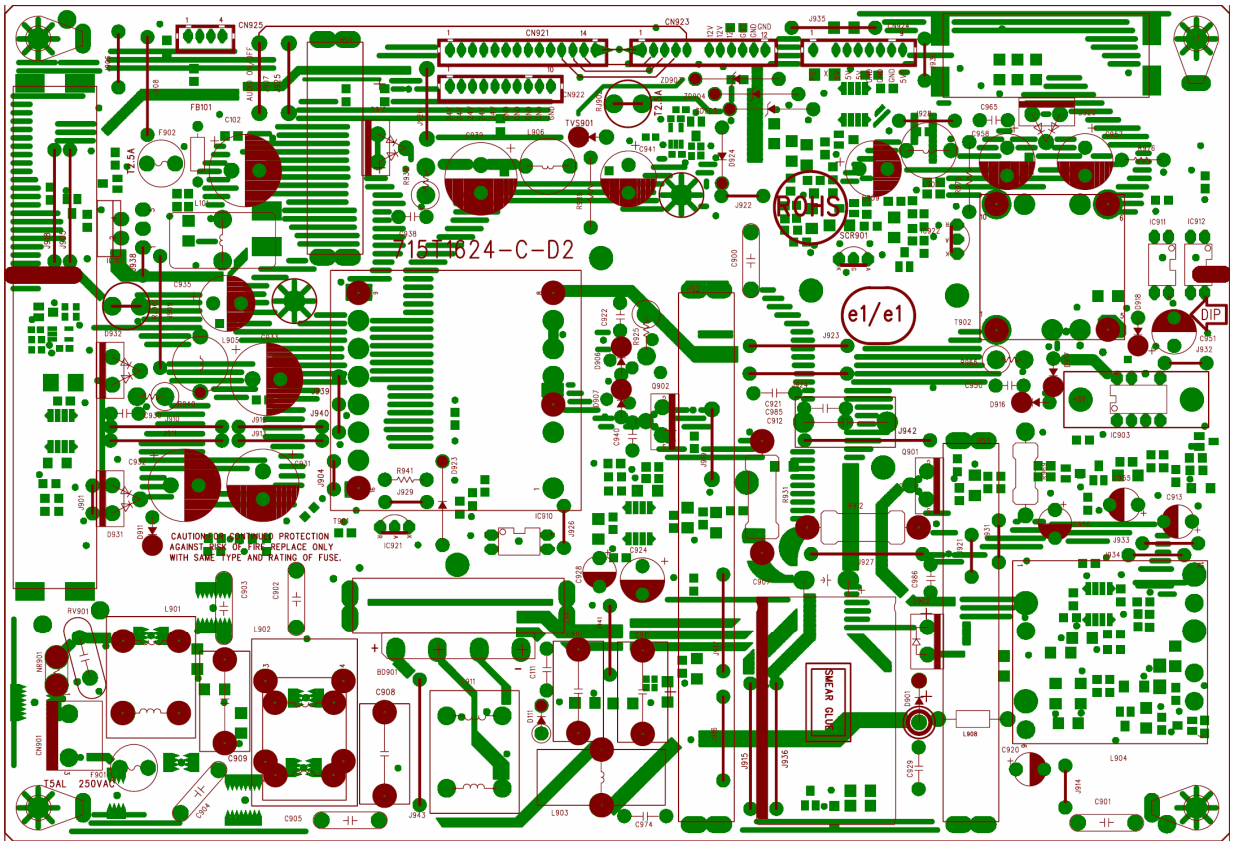

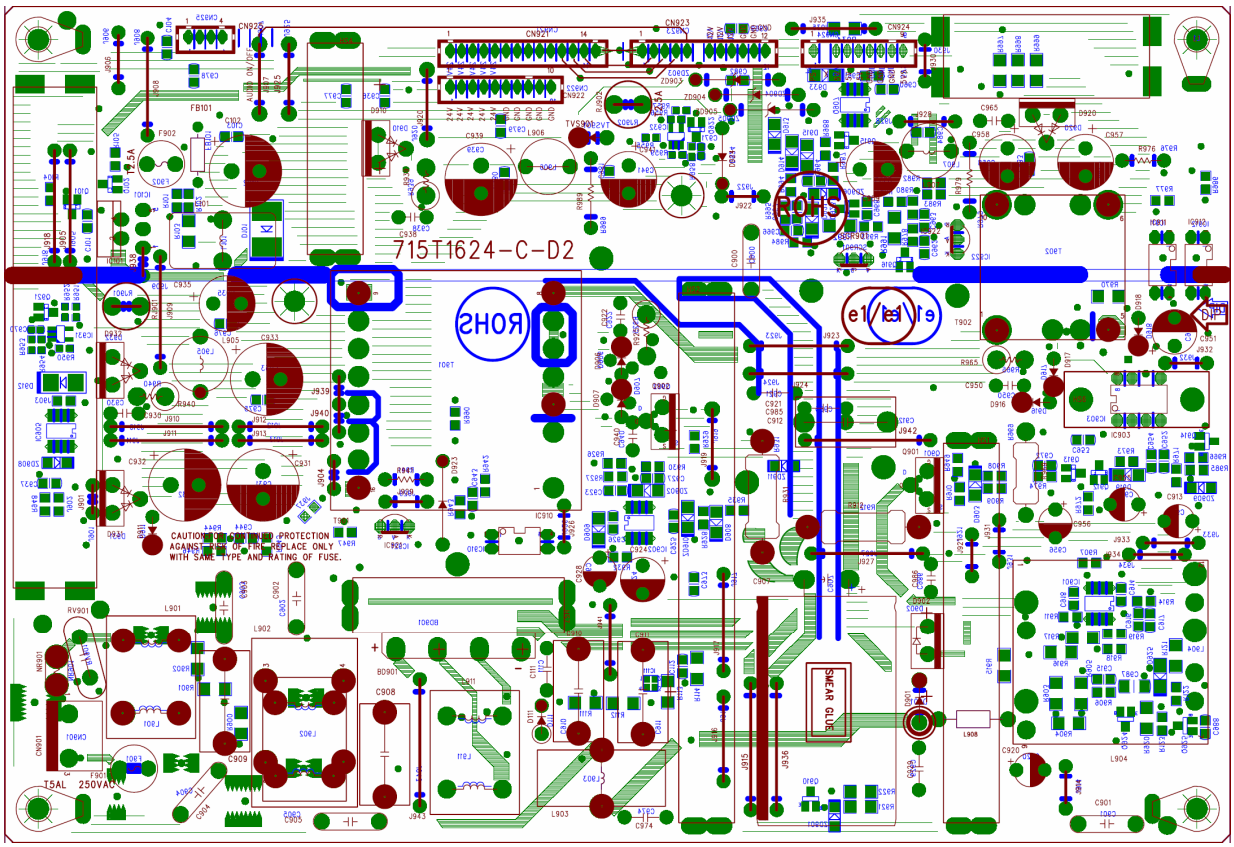

10.3 I/O Board

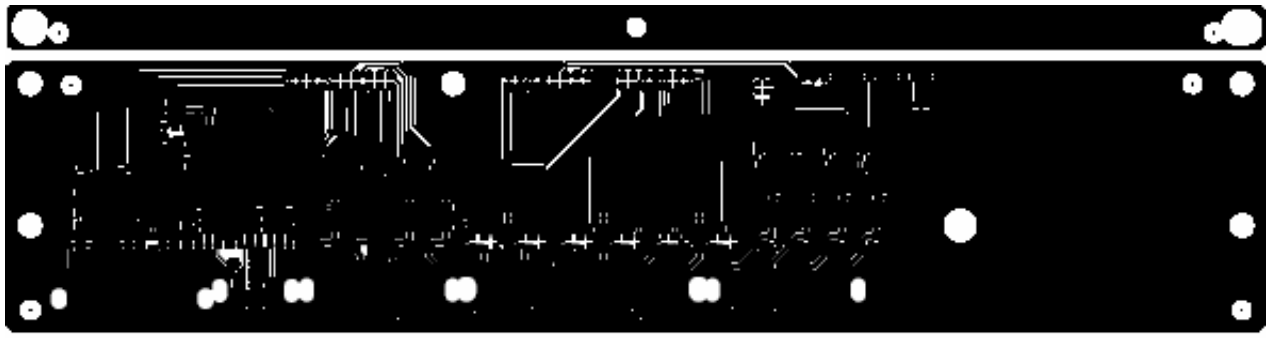

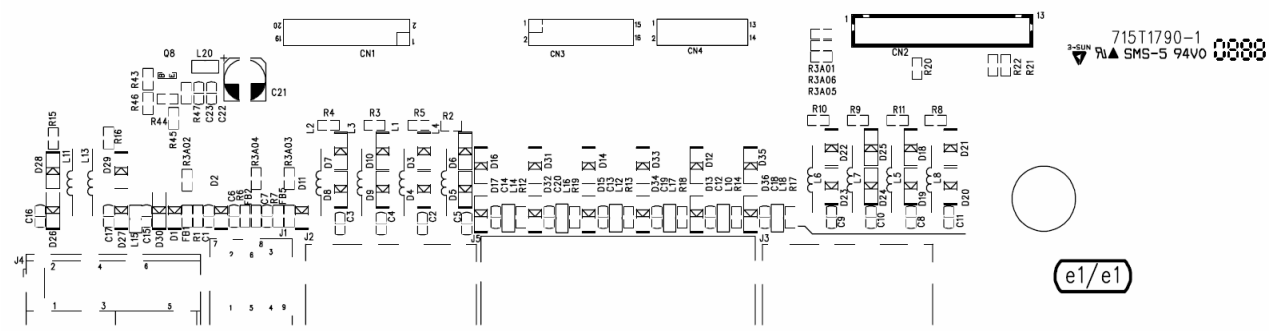

10.4 Key Board

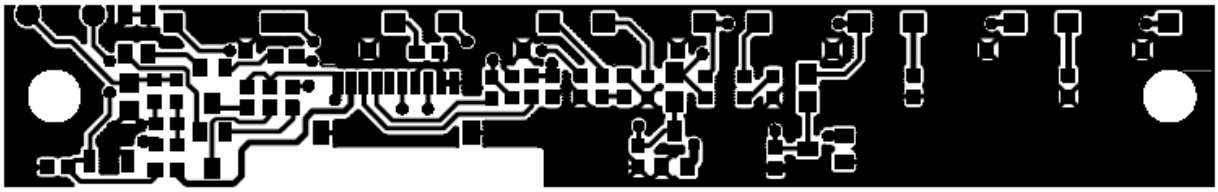

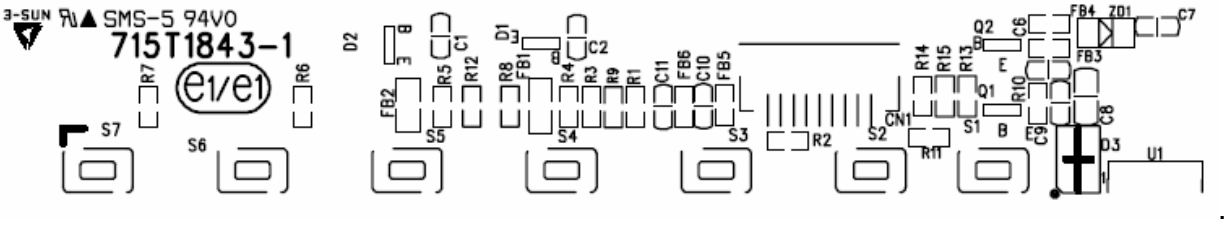

10.5 Side Board

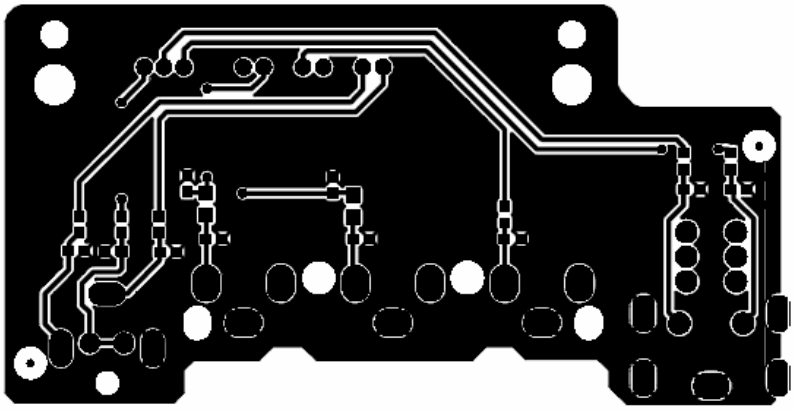

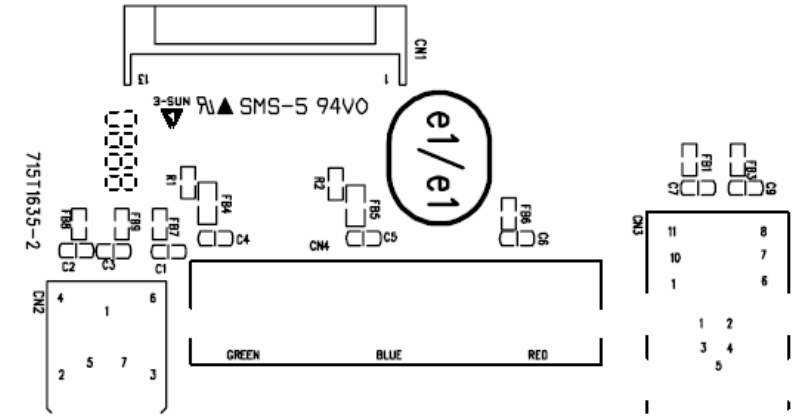

11. Block Diagram

11.1 Main board

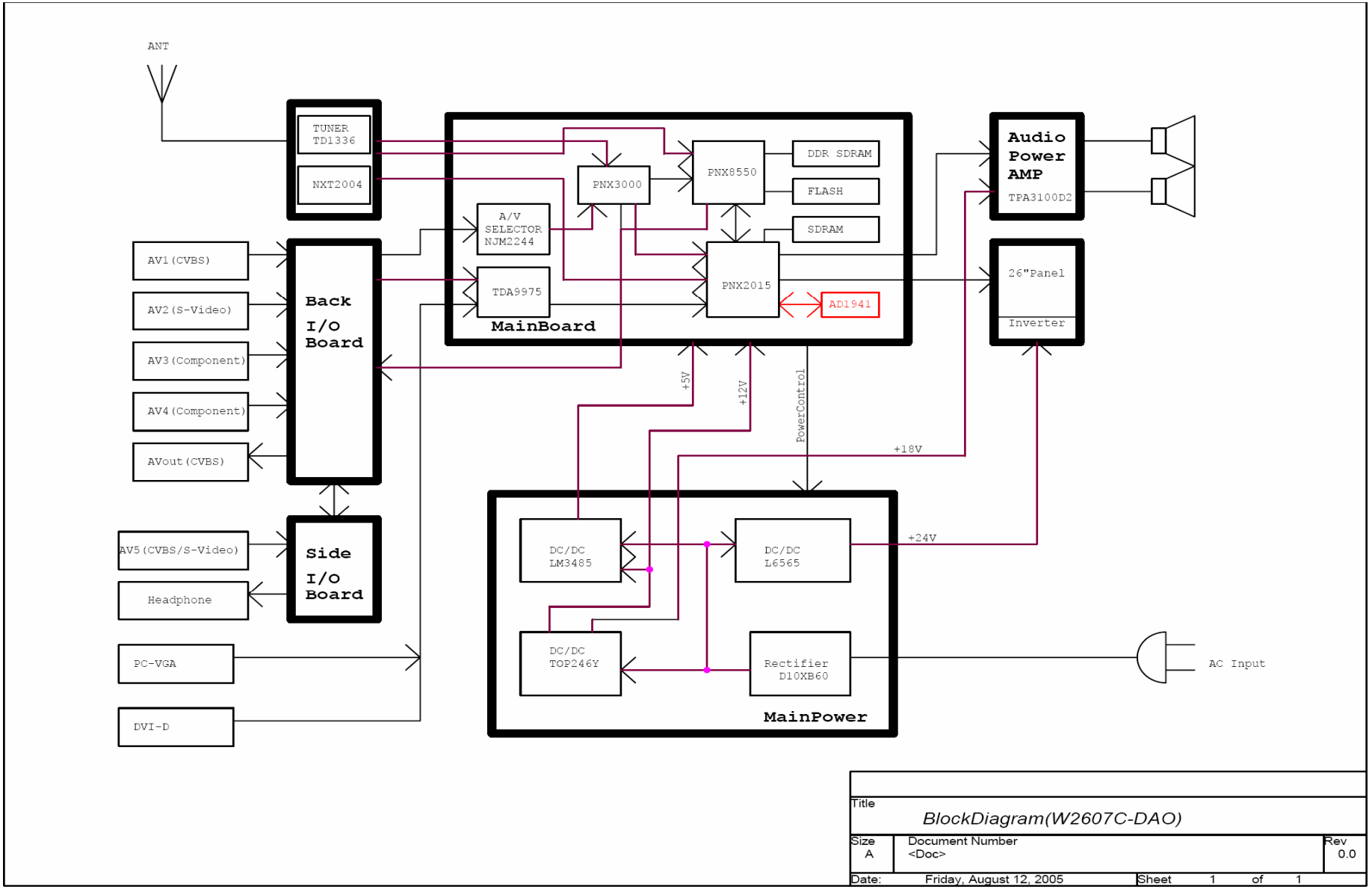

11.2 Power Board

26” DELL TV Power Block Diagram

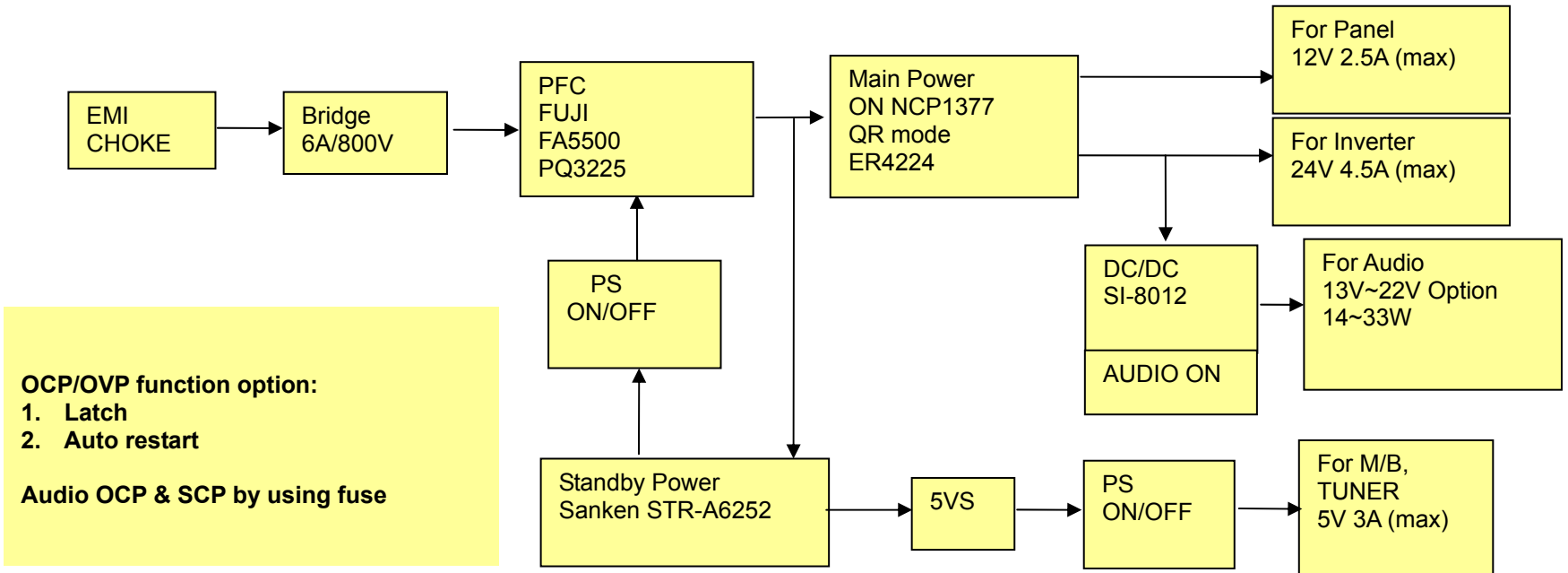

Standby mode <1W @5VS_ 50mA & 240Vac

11.3 Exploded View

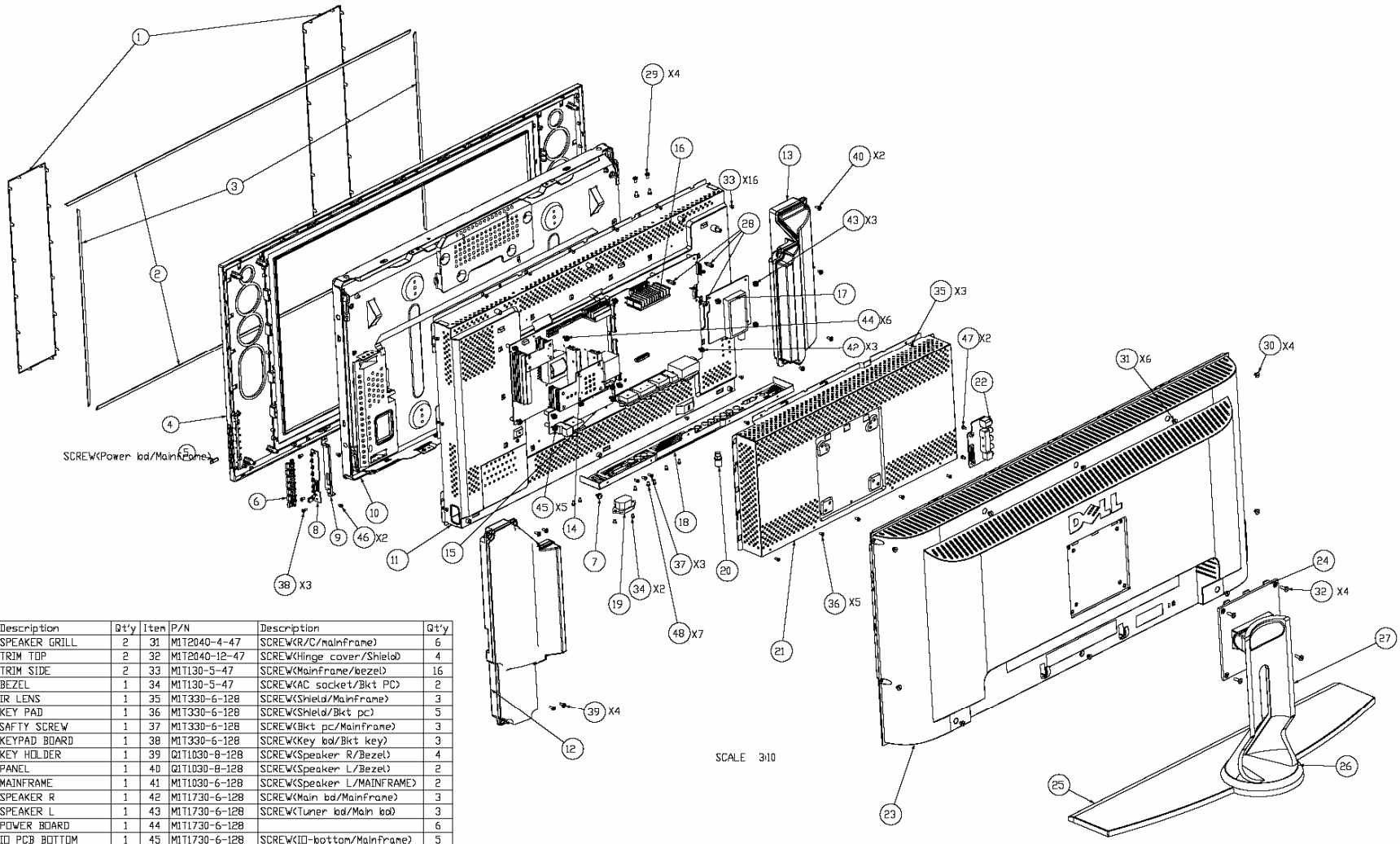

Item	P/N	Description	Q'ty	Item	P/N	Description	Q'ty
1	36T700-6-TH	SPEAKER GRILL	2	31	M1T2040-4-47	SCREW(R/C/mainframe)	6
2	33TD601-H0-L	TRIM TOP	2	32	M1T2040-12-47	SCREW(Hinge cover/Shield)	4
3	33TD602-H0-L	TRIM SIDE	2	33	M1T130-5-47	SCREW(Mainframe/bezel)	16
4	34T1671-ACW-T	BEZEL	1	34	M1T130-5-47	SCREW(AC socket/Bkt PC)	2
5	33T4910-ED-C	IR LENS	1	35	M1T330-6-128	SCREW(Shield/Mainframe)	3
6	33T4904-H0-C	KEY PAD	1	36	M1T330-6-128	SCREW(Shield/Bkt pc)	5
7	M1T1140-4-128	SAFTY SCREW	1	37	M1T330-6-128	SCREW(Bkt pc/Mainframe)	3
8		KEYPAD BOARD	1	38	M1T330-6-128	SCREW(Key bd/Bkt key)	3
9	15T6268-1	KEY HOLDER	1	39	Q1T1030-8-128	SCREW(Speaker R/Bezel)	4
10		PANEL	1	40	Q1T1030-8-128	SCREW(Speaker L/Bezel)	2
11	15T8288-1	MAINFRAME	1	41	M1T1030-6-128	SCREW(Speaker L/MAINFRAME)	2
12		SPEAKER R	1	42	M1T1730-6-128	SCREW(Main bd/Mainframe)	3
13		SPEAKER L	1	43	M1T1730-6-128	SCREW(Tuner bd/Main bd)	3
14		POWER BOARD	1	44	M1T1730-6-128		6
15		IO PCB BOTTOM	1	45	M1T1730-6-128	SCREW(IO-bottom/Mainframe)	5
16		SCALAR BOARD	1	46	Q1T330-5-120	SCREW(Bkt key/Bezel)	2
17		TUNER BOARD	1	47	Q1T330-5-120	SCREW(Side bd/R/C)	2
18	15T8289-1-TH	BKT_PC_DAO	1	48	Q1T330-5-120	SCREW(BKT_PC_DAO/Connector	7
19		AC SOCKET	1	49			1
20		TUNER CONNECTOR	1	50			
21	85T730-1	SHIELDING	1	51			
22		SIDE CONNECTOR BD	1	52			
23	34T1778-ATH-T	REAR COVER	1	53			
24	34T1675-TH-T	VESA COVER	1	54			
25	34T1673-H0-L	BASE TRIM	1	55			
26	34T1674-H0-L	RISER TRIM	1	56			
27	37T544-1-TH	HINGE	1	57			
28	2T6019-1	STAND OFF M3 L12mm	3	58			
29	M1T340-6-120	SCREW(frame/Panel)	4	59			
30	M1T2040-4-47	SCREW(R/C/Bezel)	4	60			

TV2607_DELL EXPLODED DRAWING

12. Schematic Diagram

12.1 Main Board

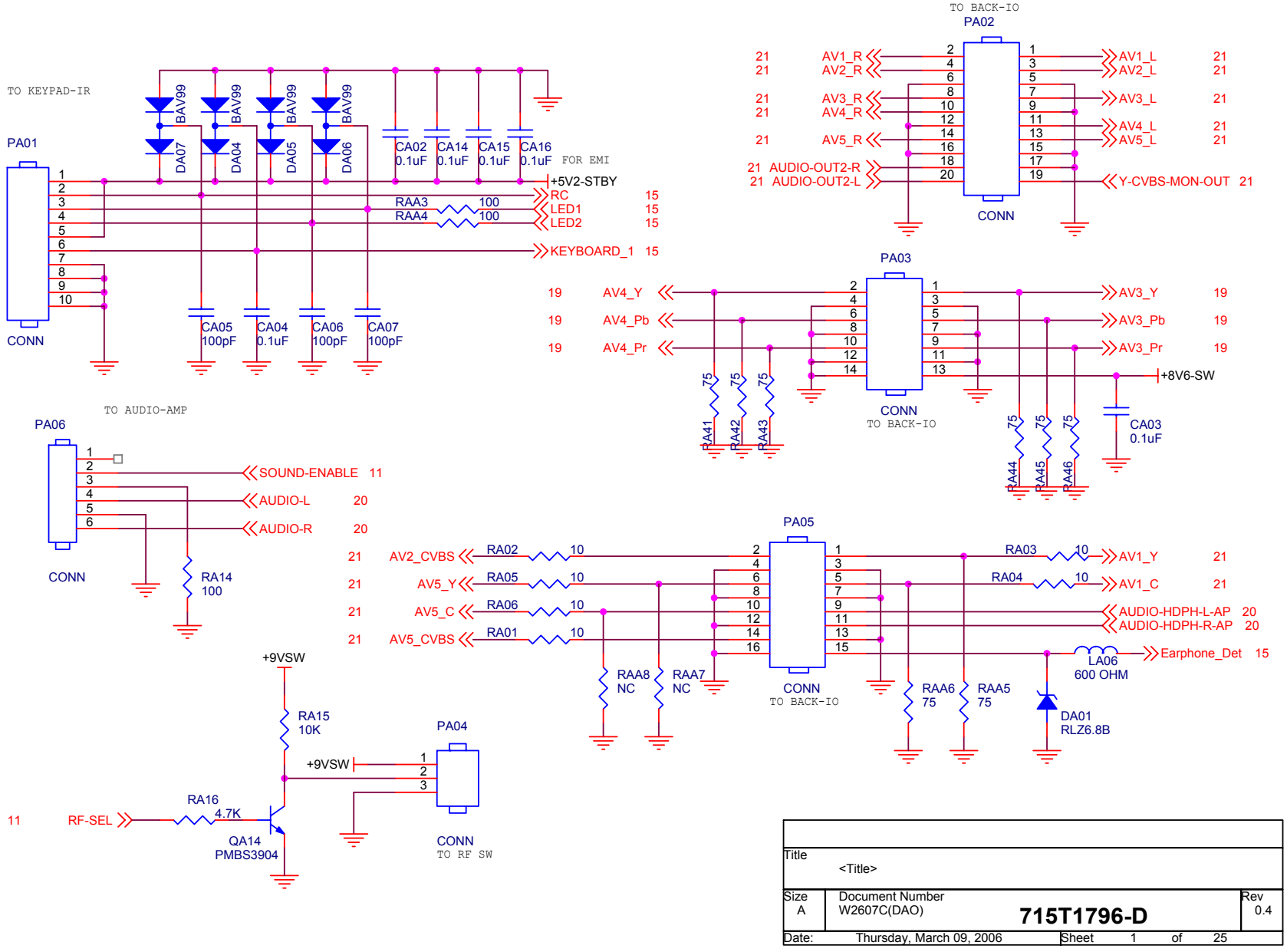

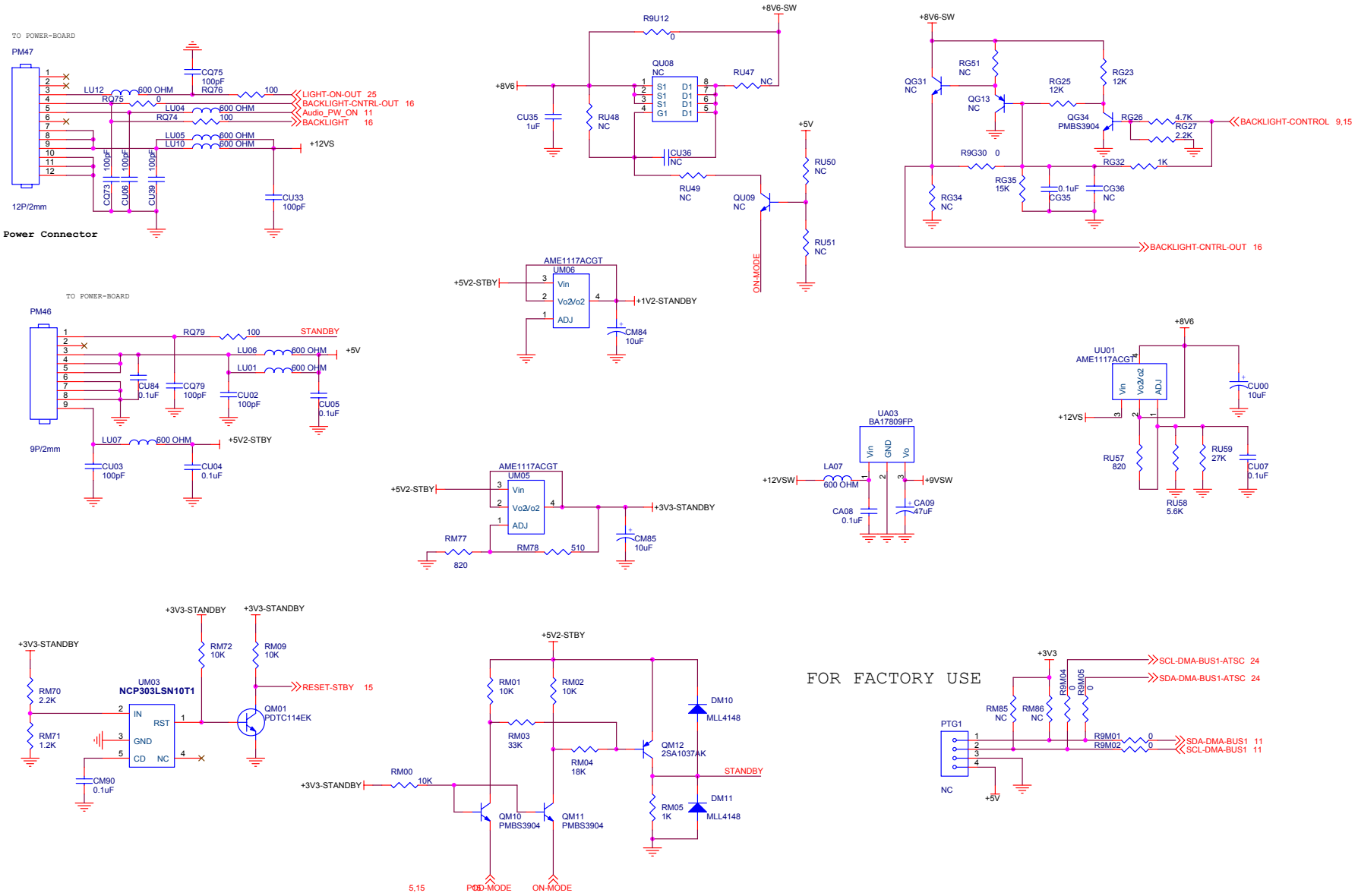

Title			
Size A3	Document Number W2607C(DAO)	715T1796-D	Rev 0.4
Date: Thursday, March 09, 2006	Sheet 2 of 25		

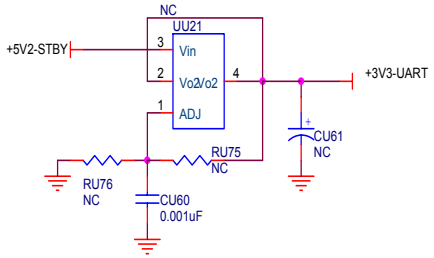

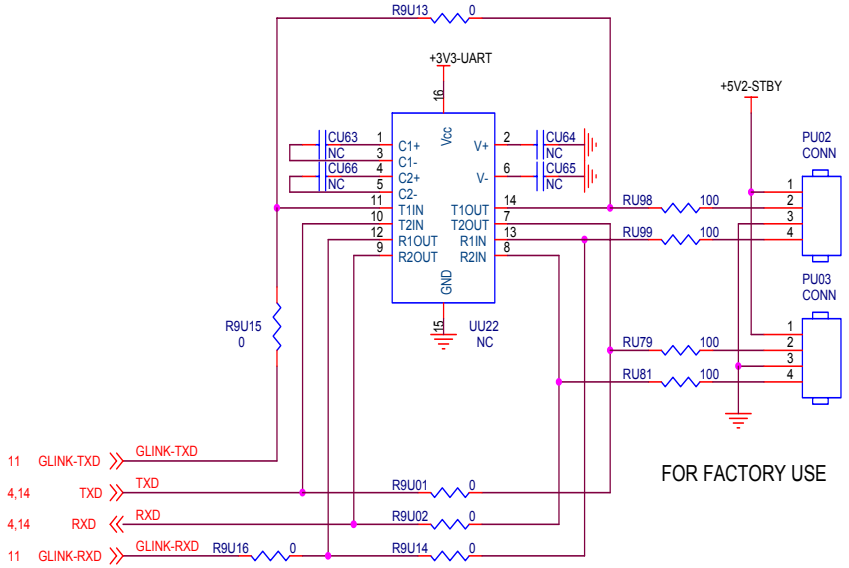

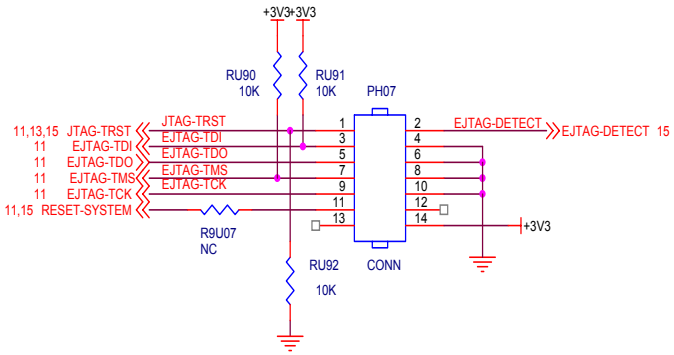

Title			
Size B	Document Number W2607C(DAO)	715T1796-D	Rev 0.4
Date: Thursday, March 09, 2006		Sheet 3 of 25	

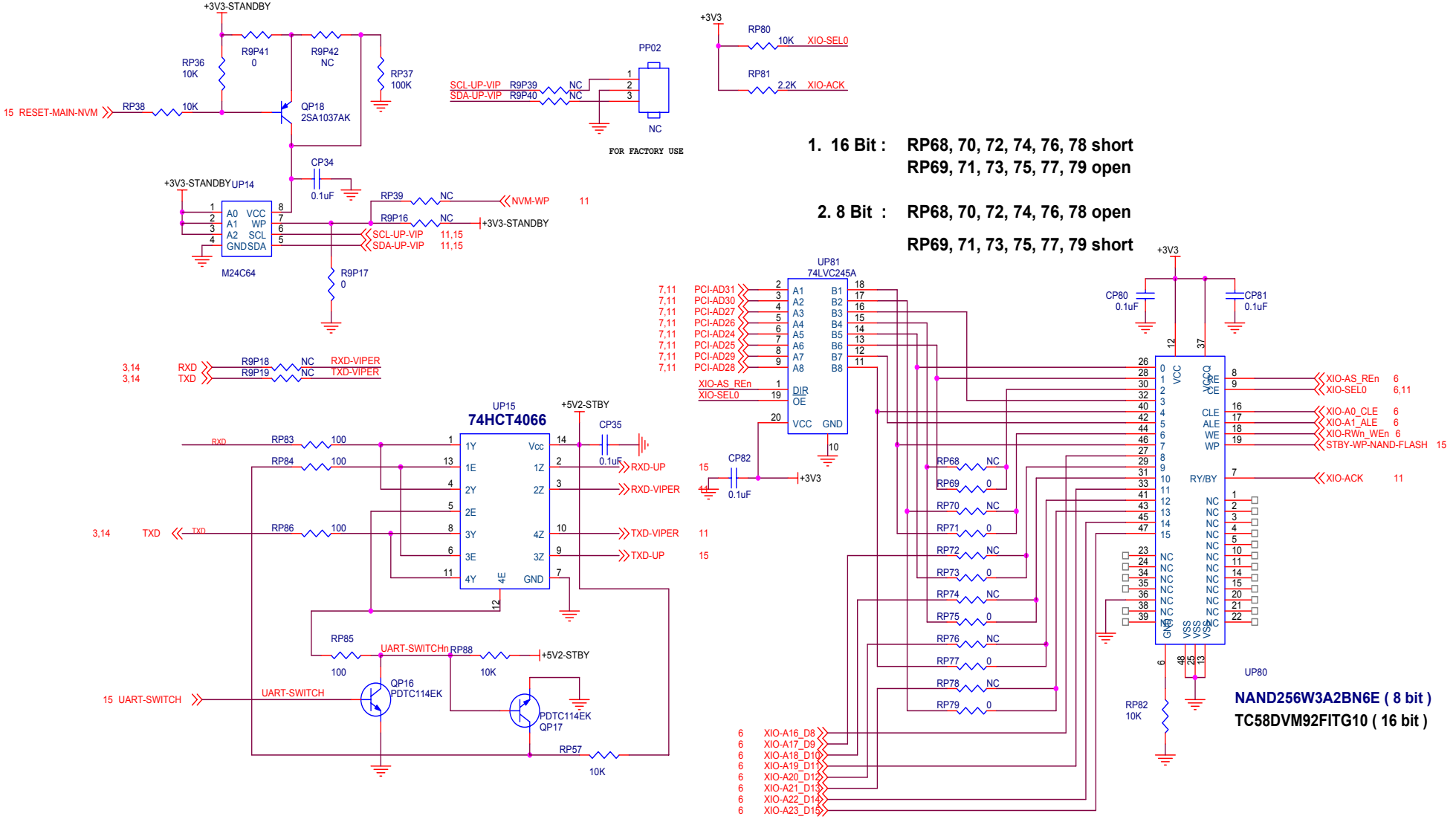

1. 16 Bit : RP68, 70, 72, 74, 76, 78 short
RP69, 71, 73, 75, 77, 79 open

2. 8 Bit : RP68, 70, 72, 74, 76, 78 open

RP69, 71, 73, 75, 77, 79 short

NAND256W3A2BN6E (8 bit)
TC58DVM92FITG10 (16 bit)

Title			
Size B	Document Number W2607C(DAO)	**715T1796-D**	Rev 0.4
Date: Thursday, March 09, 2006	Sheet 4 of 25		

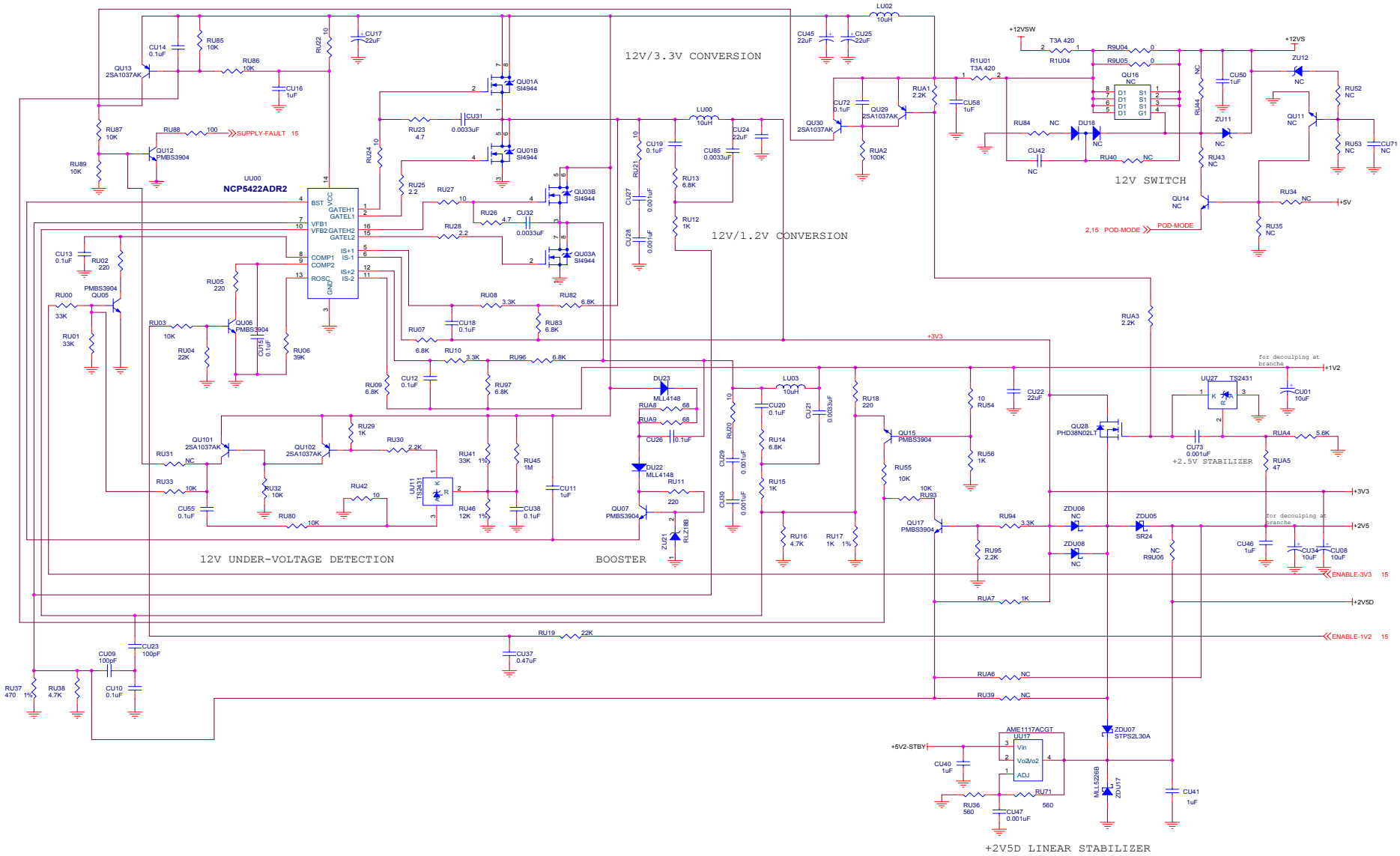

Title			
Size C	Document Number W2607C(DAO)	715T1796-D	Rev 0.4
Date: Thursday, March 09, 2006		Sheet 5 of 25	

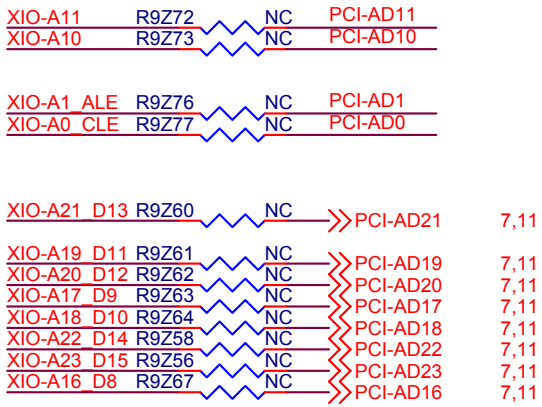

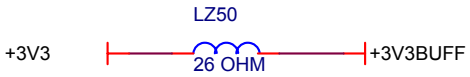

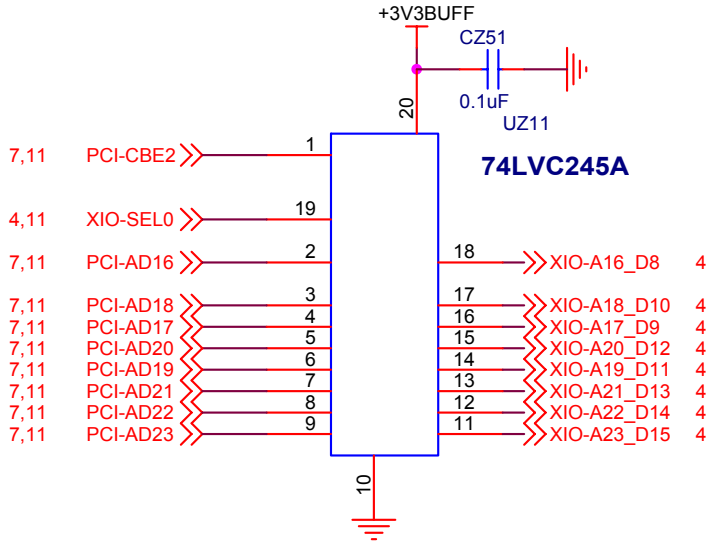

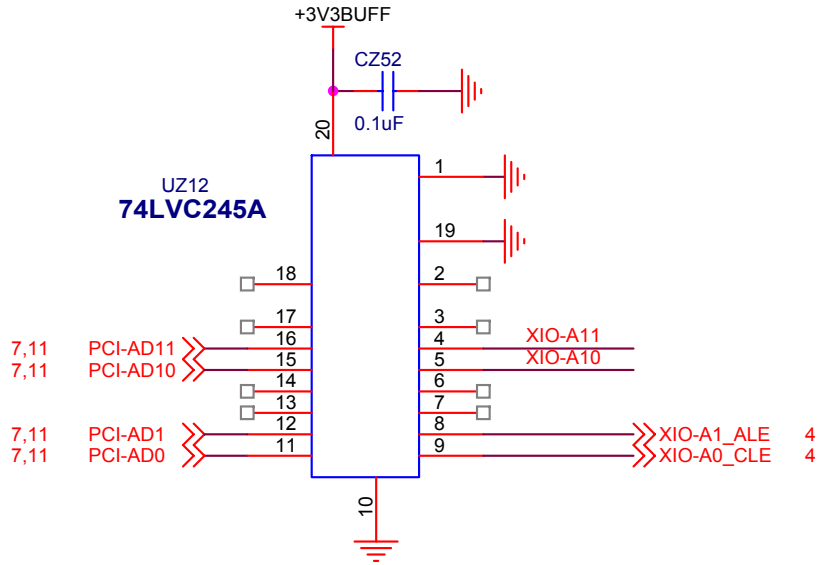

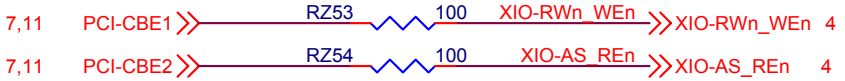

Title			
Size A	Document Number W2607C(DAO)	715T1796-D	Rev 0.4
Date: Thursday, March 09, 2006	Sheet 6 of 25		

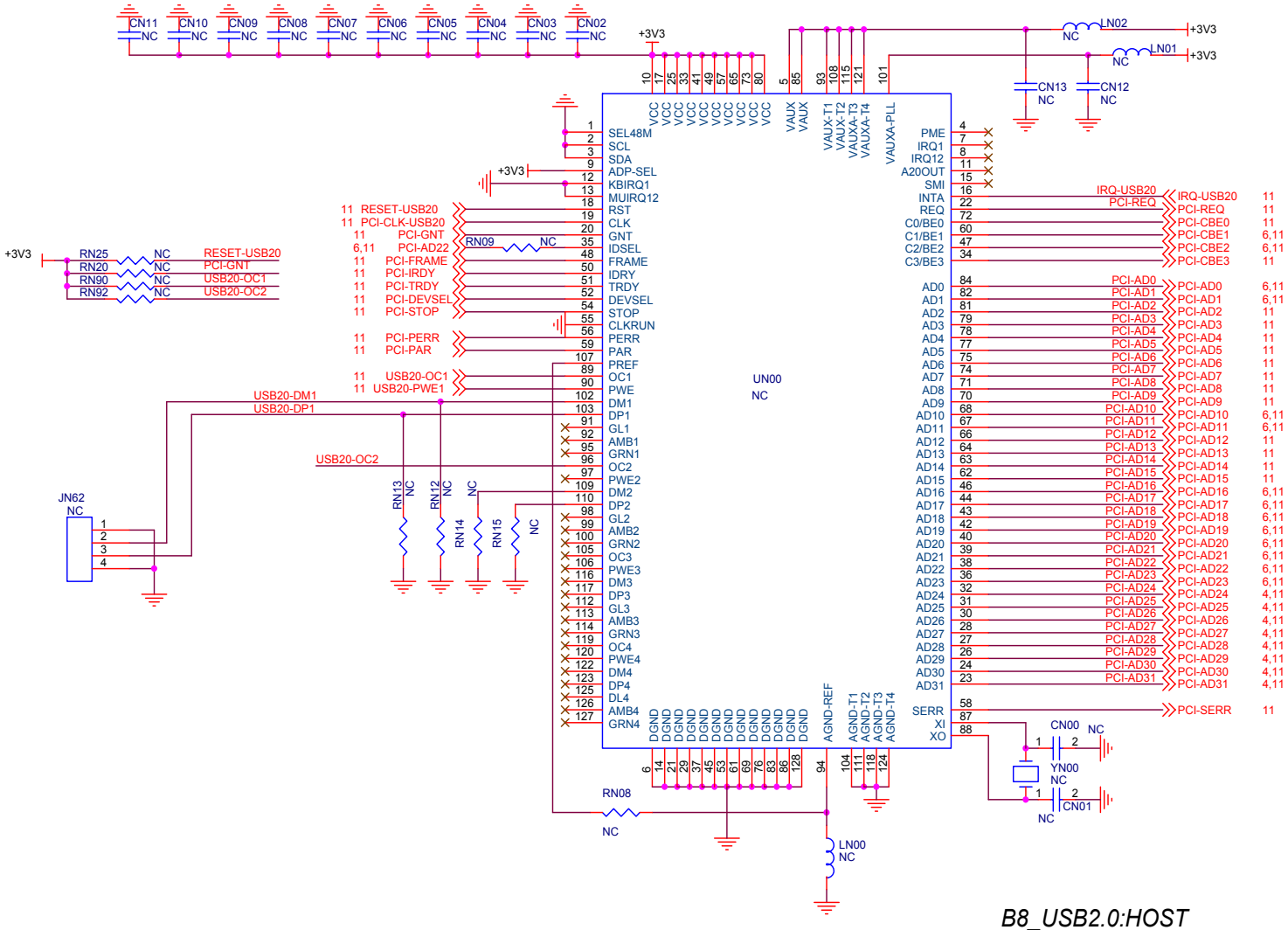

B8_USB2.0:HOST

Title			
Size B	Document Number W2607C(DAO)	**715T1796-D**	Rev 0.4
Date: Thursday, March 09, 2006	Sheet 7 of 25		

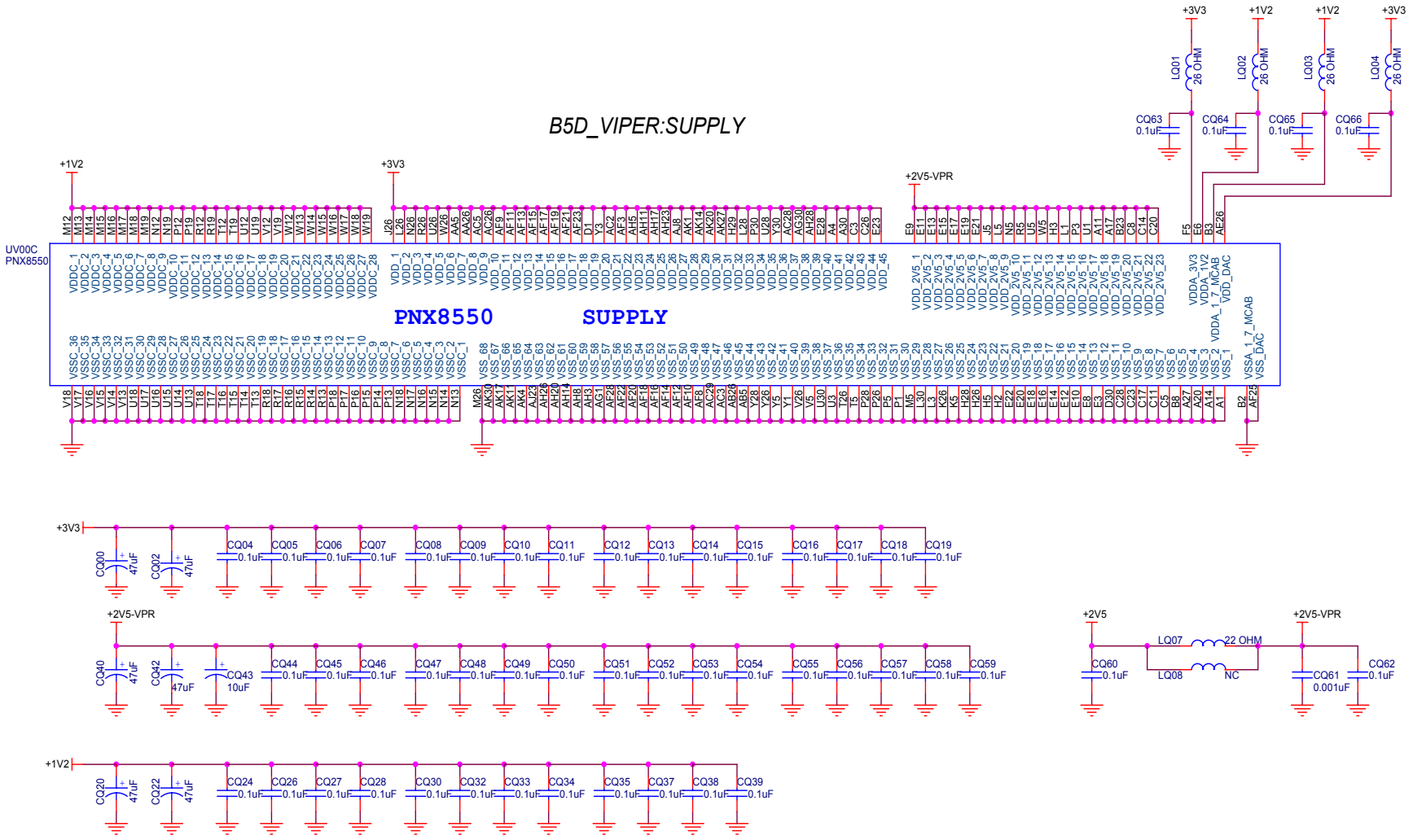

Title			
Size B	Document Number W2607C(DAO)	715T1796-D	Rev 0.4
Date: Thursday, March 09, 2006		Sheet 8 of 25	

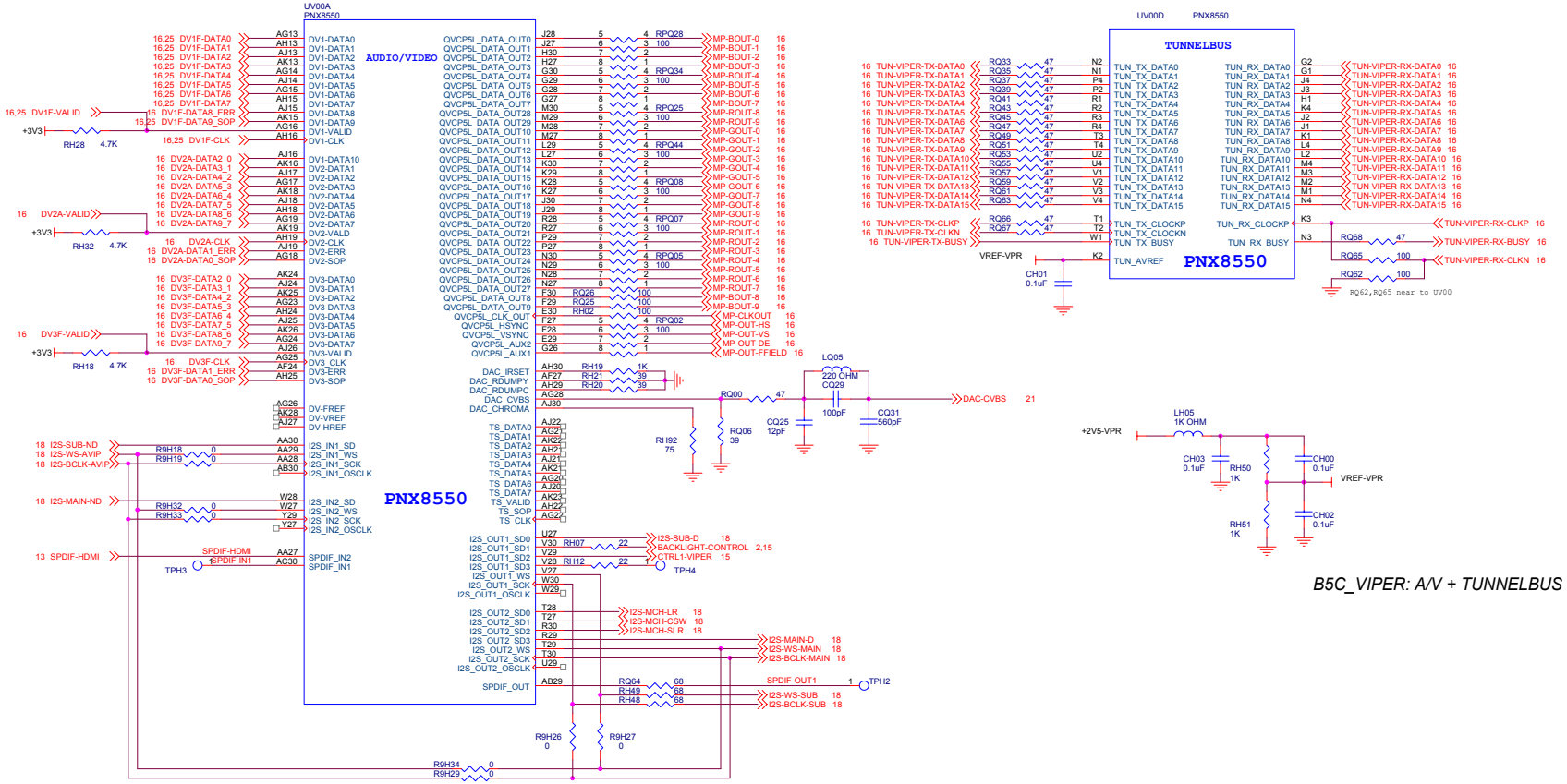

B5C_VIPER: A/V + TUNNELBUS

Title			
Size C	Document Number W2607C(DAO)	715T1796-D	Rev 0.4
Date: Thursday, March 09, 2006		Sheet 9 of 25	

B5B_VIPER:MAIN MEMORY

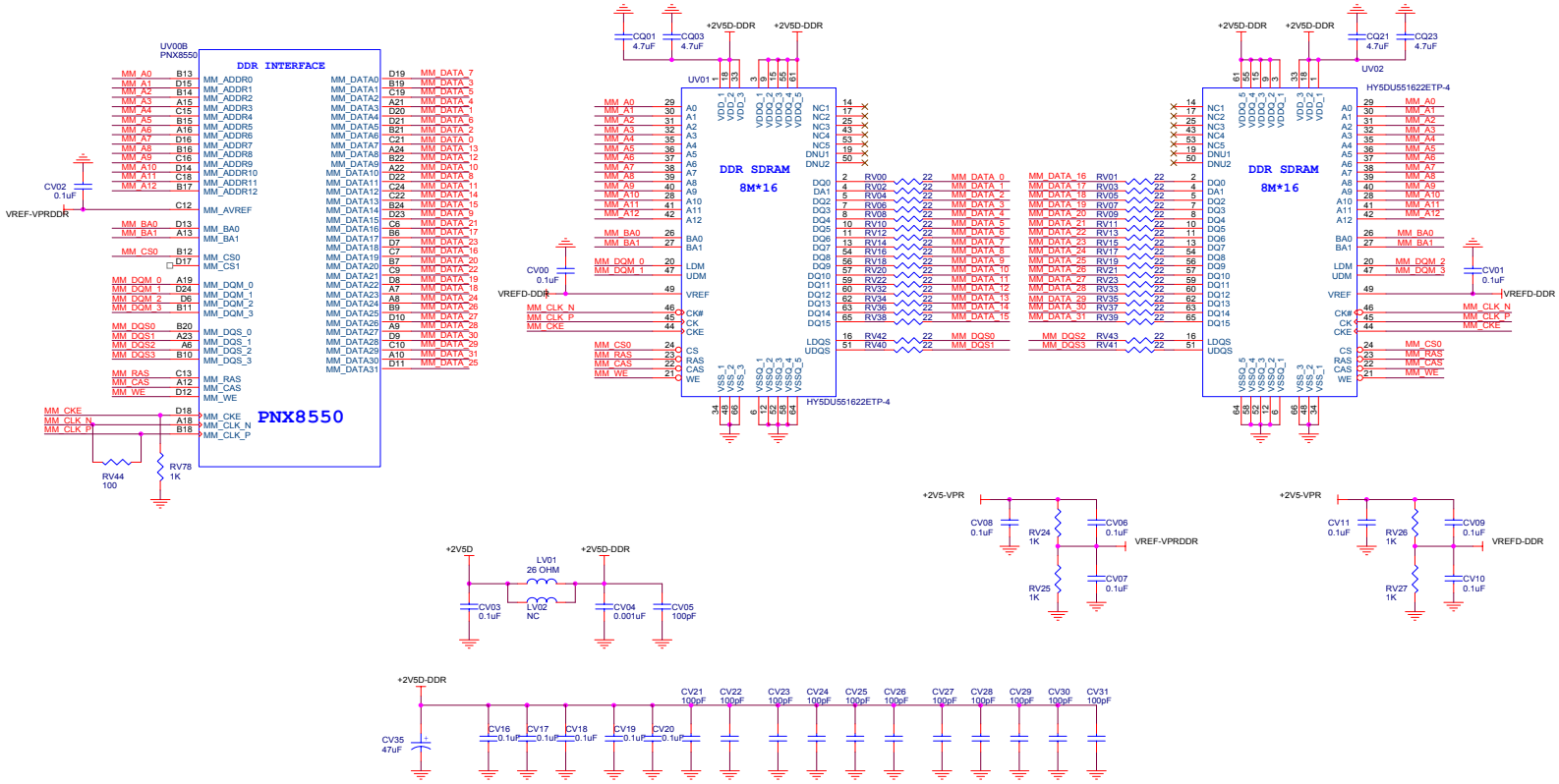

Title			
Size C	Document Number W2607C(DAO)	715T1796-D	Rev 0.4
Date: Thursday, March 09, 2006	Sheet 10 of 25		

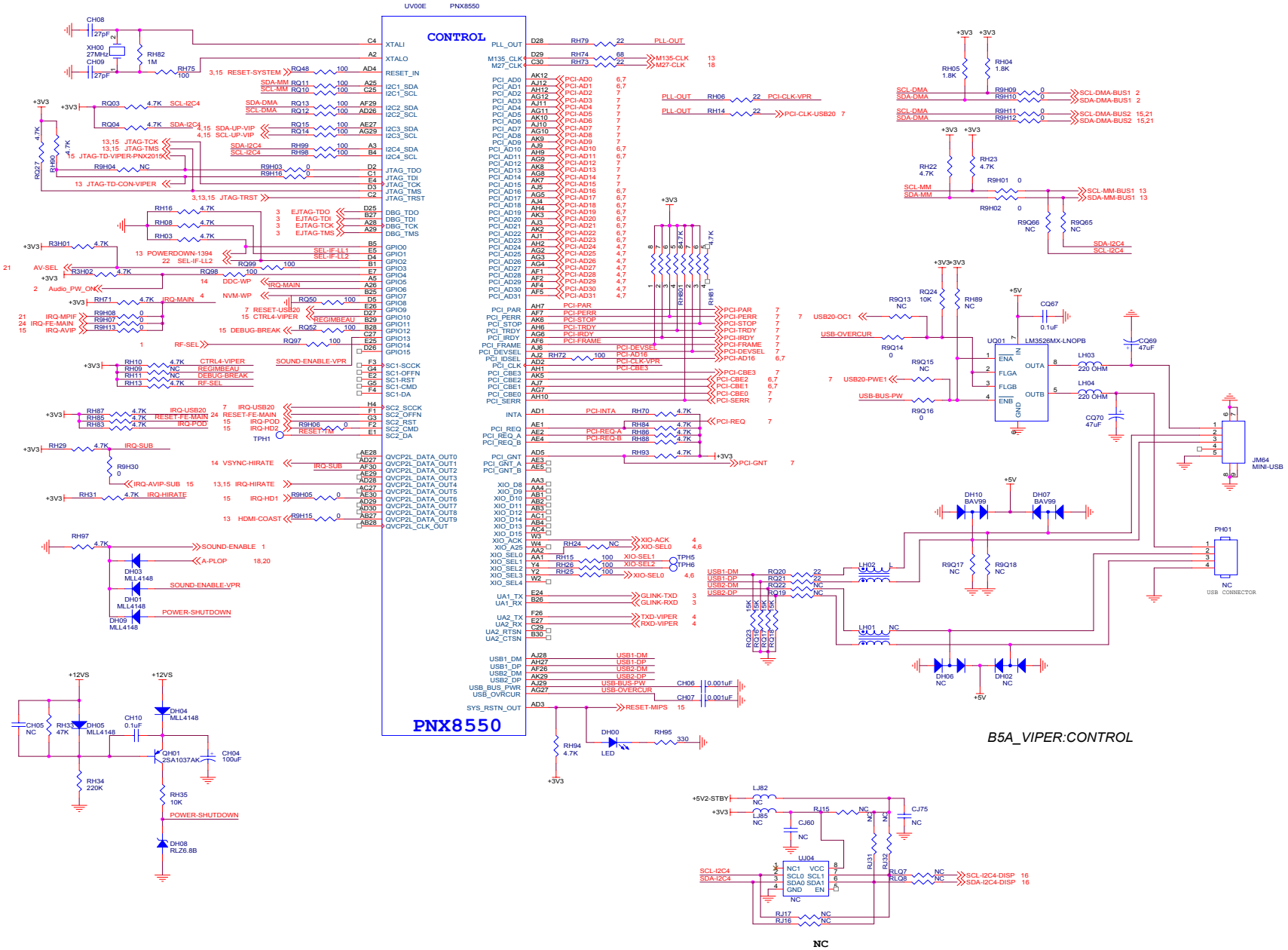

Title			
Size C	Document Number W2607C(DAO)	715T1796-D	Rev 0.4
Date: Thursday, March 09, 2006		Sheet 11 of 25	

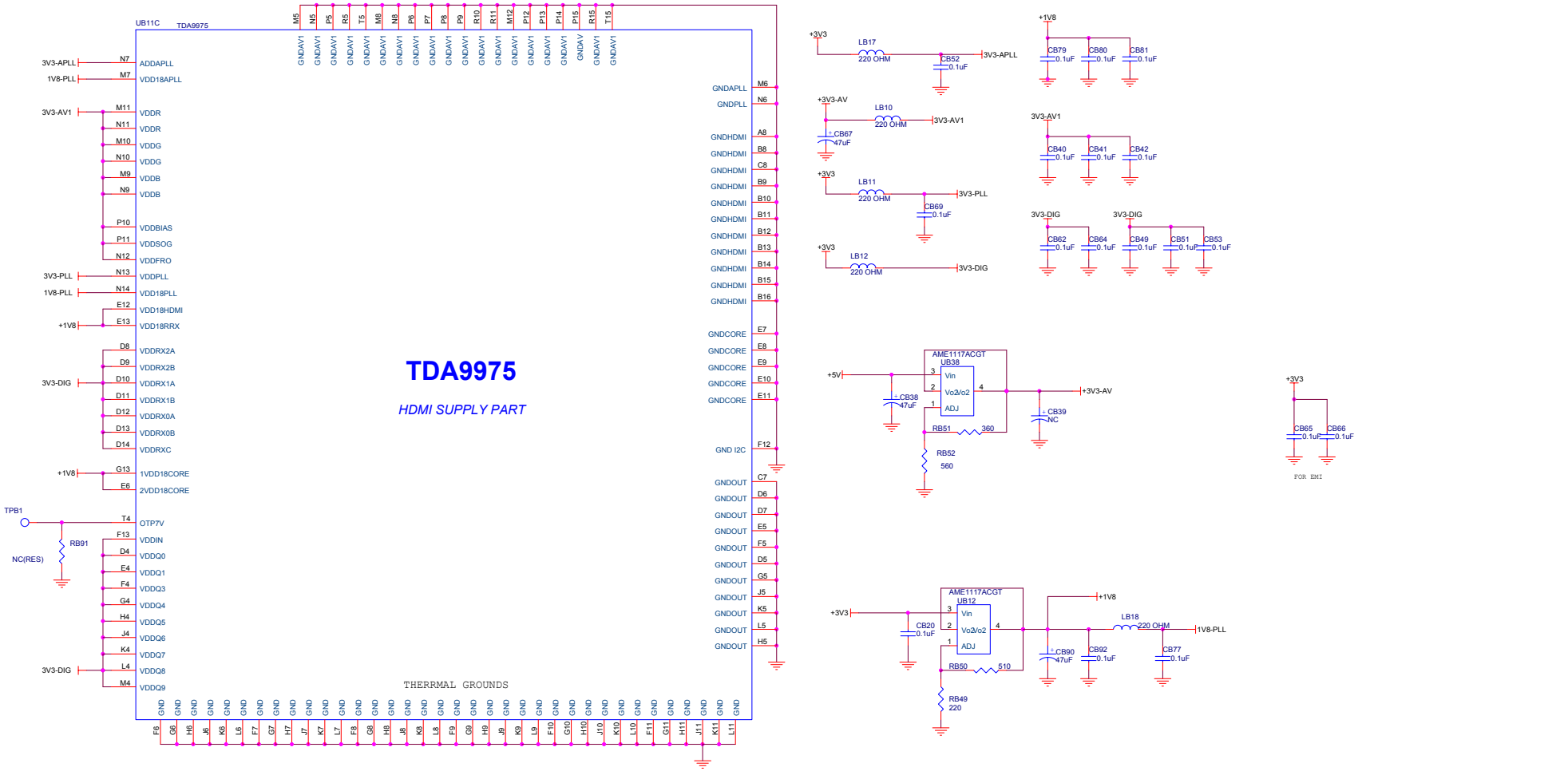

Title			
Size C	Document Number W2607C(DAO)	715T1796-D	Rev 0.4
Date: Thursday, March 09, 2006		Sheet 12 of 25	

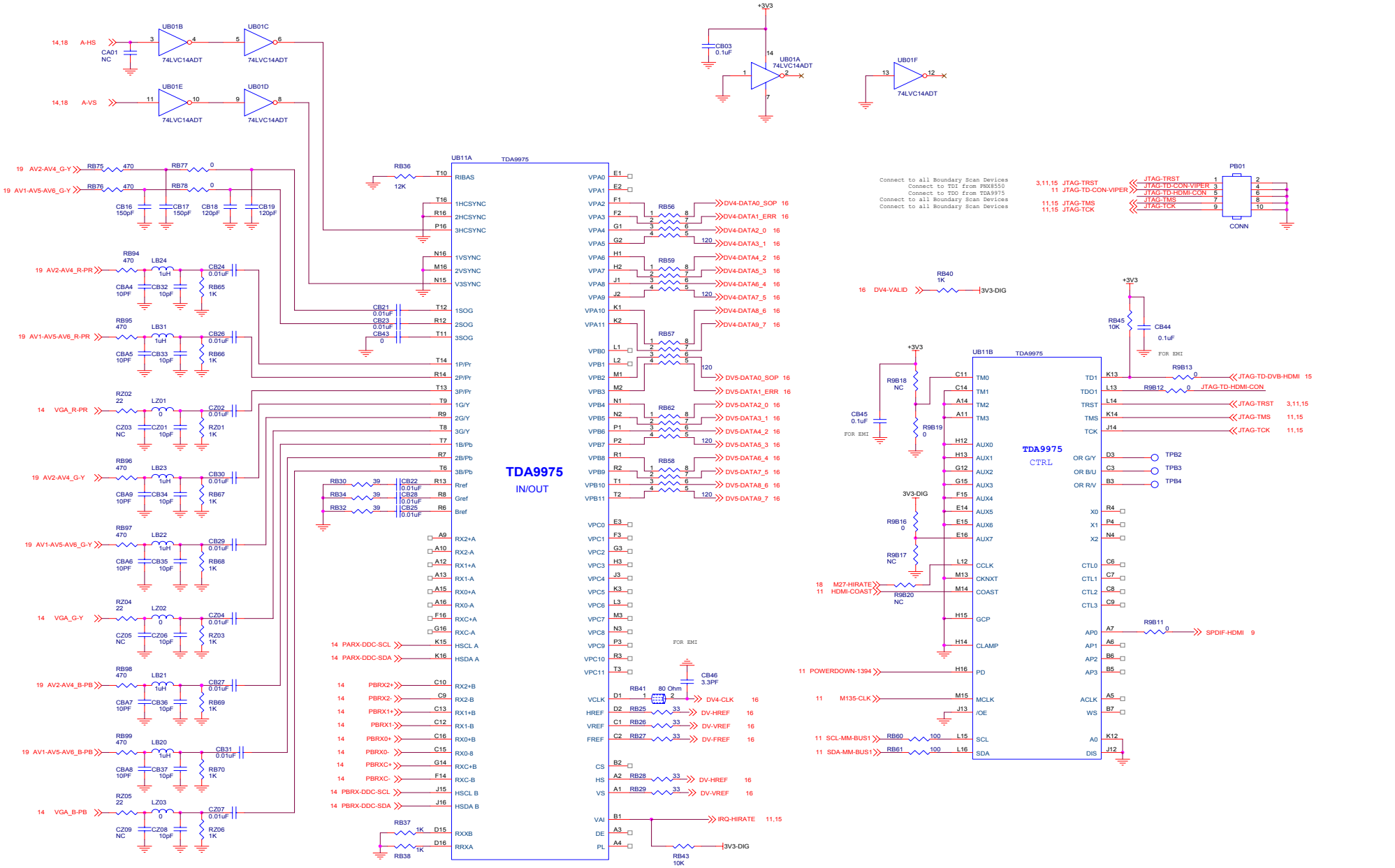

Title			
Size C	Document Number W2607C(DAO)	715T1796-D	Rev 0.4
Date: Thursday, March 09, 2006	Sheet 13 of 25		

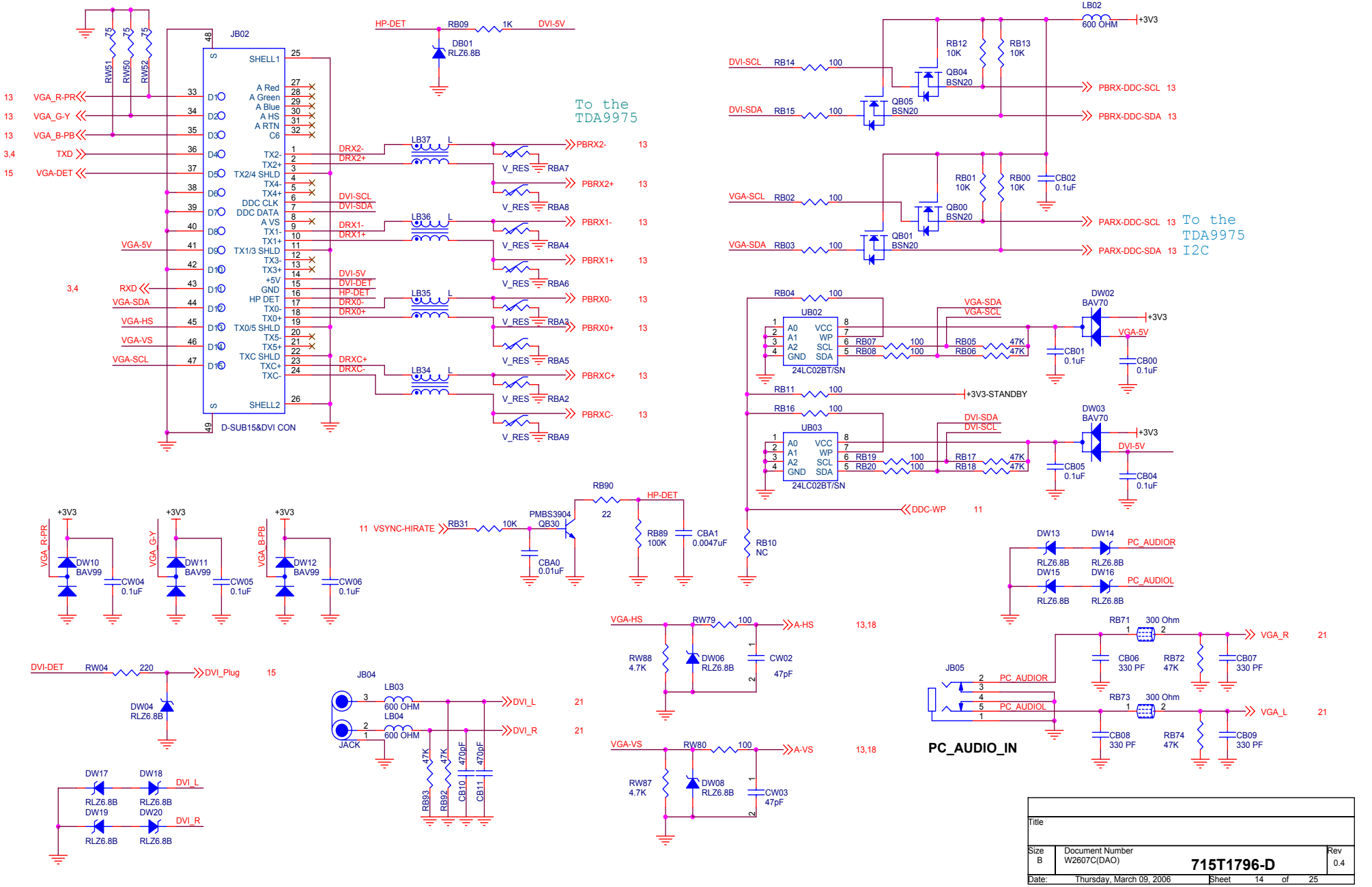

Title		
Size B	Document Number W2607C(DAO) 715T1796-D	Rev 0.4
Date: Thursday, March 09, 2006	Sheet 14 of 25	

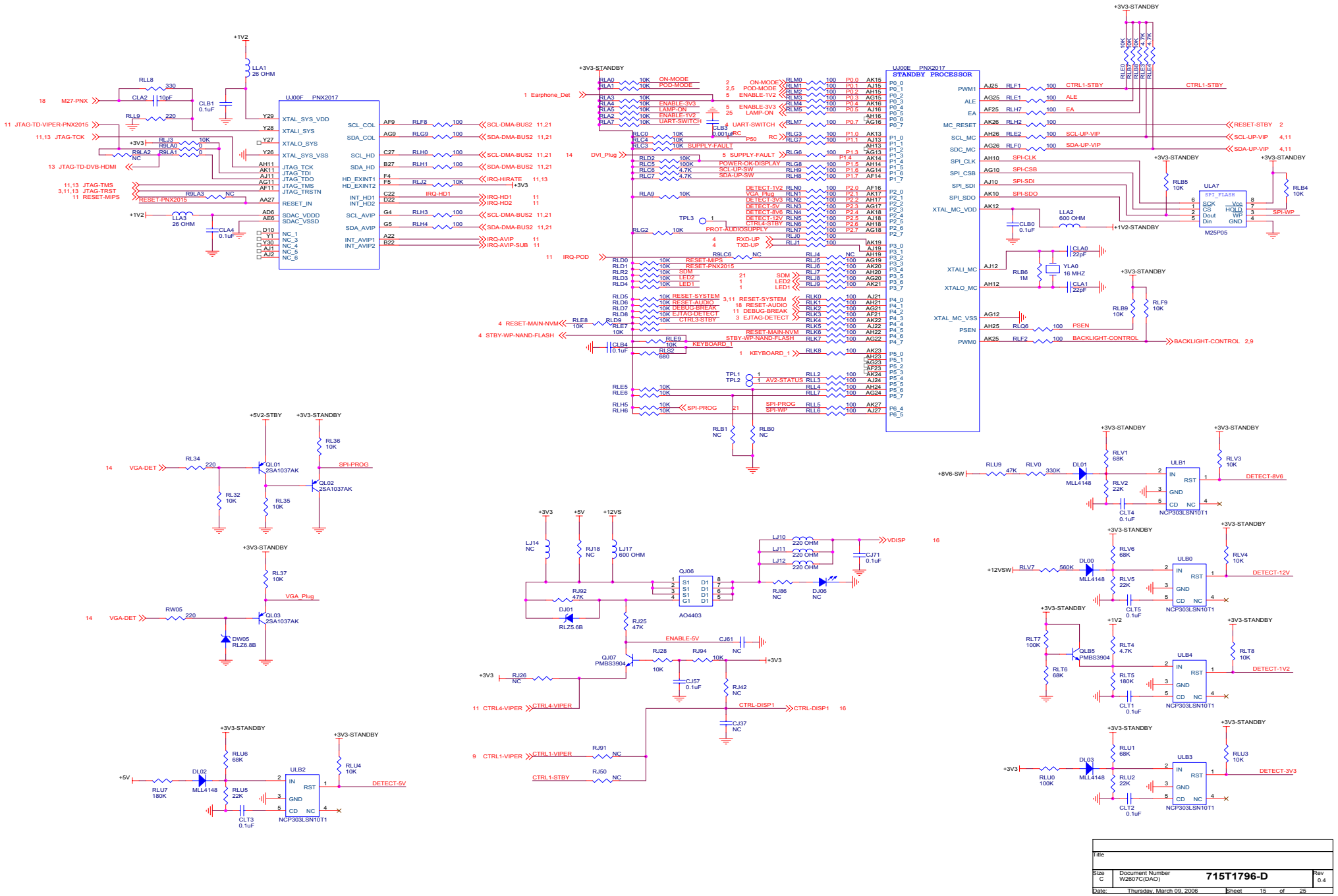
UJ00F PNX2017
UJ00E PNX2017
STANDBY PROCESSOR
+3V3-STANDBY
+1V2
+5V2-STBY
+5V
+12VS
+8V6-SW
+12VSW
+3V3
VDISP
ULA7
SPI_FLASH
M25P05
ULB1
ULB0
ULB4
ULB3
ULB2
NCP303LSN10T1
QJ06
AO4403
QJ07
PMBS3904
QL01
2SA1037AK
QL02
2SA1037AK
QL03
2SA1037AK
DL01
MLL4148
DL02
MLL4148
DL03
MLL4148
DL00
MLL4148
DW05
RLZ6.8B
DJ01
RLZ5.6B
DJ06
NC
DETECT-5V
DETECT-8V6
DETECT-12V
DETECT-1V2
DETECT-3V3
CTRL1-STBY
CTRL4-VIPER
CTRL-DISP1
CTRL1-VIPER
CTRL1-STBY
SPI-PROG
SPI-WP
BACKLIGHT-CONTROL
RESET-STBY
SCL-UP-VIP
SDA-UP-VIP
SCL-DMA-BUS
SDA-DMA-BUS
IRQ-HIRATE
IRQ-HD1
IRQ-HD2
IRQ-AVIP
IRQ-AVIP-SUB
M27-PNX
JTAG-TD-VIPER-PNX2015
JTAG-TCK
JTAG-TD-DVB-HDMI
JTAG-TMS
JTAG-TRST
RESET-MIPS
RESET-PNX2015
Earphone_Det
DVI_Plug
IRQ-POD
RESET-MAIN-NVM
STBY-WP-NAND-FLASH
KEYBOARD_1
AV2-STATUS
VGA-DET
VGA_Plug
ENABLE-5V
CTRL4-VIPER
CTRL1-VIPER
CTRL1-STBY
CTRL-DISP1
ON-MODE
POD-MODE
ENABLE-1V2
ENABLE-3V3
LAMP-ON
UART-SWITCH
SUPPLY-FAULT
POWER-OK-DISPLAY
SCL-UP-SW
SDA-UP-SW
DETECT-1V2
VGA_Plug
DETECT-3V3
DETECT-5V
DETECT-8V6
DETECT-12V
DETECT-1V2
DETECT-3V3
CTRL1-STBY
CTRL4-VIPER
CTRL-DISP1
SPI-CLK
SPI-CSB
SPI-SDI
SPI-SDO
XTAL_MC_VDD
XTALI_MC
XTALO_MC
XTAL_MC_VSS
PSEN
PWM0
PWM1
ALE
EA
MC_RESET
SCL_MC
SDC_MC
SPI_CLK
SPI_CSB
SPI_SDI
SPI_SDO
XTAL_MC_VDD
XTALI_MC
XTALO_MC
XTAL_MC_VSS
PSEN
PWM0
SCL_COL
SDA_COL
SCL_HD
SDA_HD
HD_EXINT1
HD_EXINT2
INT_HD1
INT_HD2
SCL_AVIP
SDA_AVIP
INT_AVIP1
INT_AVIP2
XTALI_SYS
XTALO_SYS
XTAL_SYS_VSS
JTAG_TCK
JTAG_TDI
JTAG_TDO
JTAG_TMS
JTAG_TRSTN
RESET_IN
SDAC_VDDD
SDAC_VSSD
NC_1
NC_3
NC_4
NC_5
NC_6
Title
Size
C
Document Number
W2607C(DAO)
715T1796-D
Rev
0.4
Date:
Thursday, March 09, 2006
Sheet
15
of
25

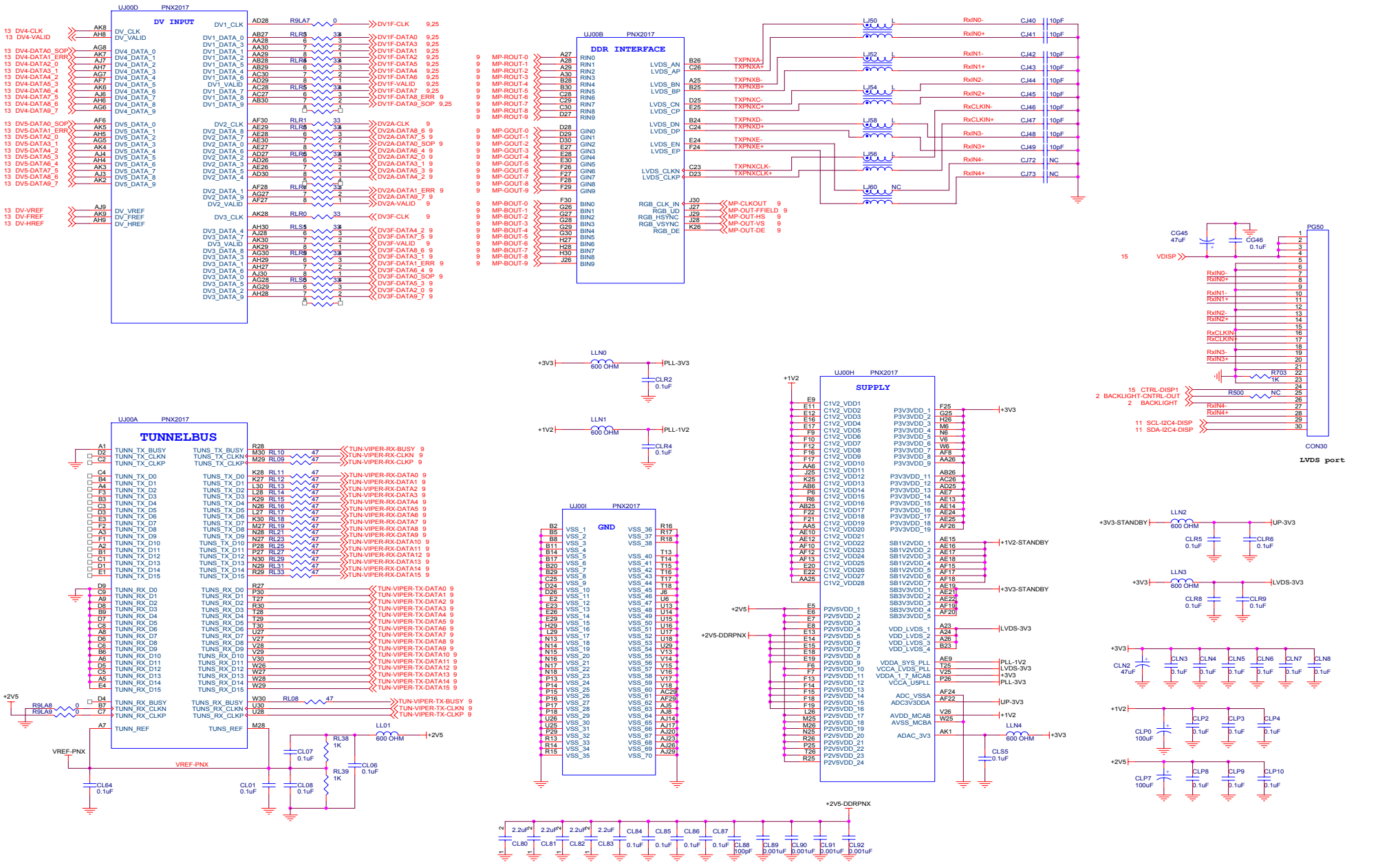
UJ00D PNX2017
DV INPUT
DV_CLK
DV_VALID
DV4_DATA_0
DV4_DATA_1
DV4_DATA_2
DV4_DATA_3
DV4_DATA_4
DV4_DATA_5
DV4_DATA_6
DV4_DATA_7
DV4_DATA_8
DV4_DATA_9
DV5_DATA_0
DV5_DATA_1
DV5_DATA_2
DV5_DATA_3
DV5_DATA_4
DV5_DATA_5
DV5_DATA_6
DV5_DATA_7
DV5_DATA_8
DV5_DATA_9
DV_VREF
DV_FREF
DV_HREF
DV1_CLK
DV1_DATA_0
DV1_DATA_3
DV1_DATA_1
DV1_DATA_2
DV1_DATA_5
DV1_DATA_4
DV1_DATA_6
DV1_VALID
DV1_DATA_7
DV1_DATA_8
DV1_DATA_9
DV2_CLK
DV2_DATA_8
DV2_DATA_7
DV2_DATA_0
DV2_DATA_6
DV2_DATA_2
DV2_DATA_3
DV2_DATA_5
DV2_DATA_4
DV2_DATA_1
DV2_DATA_9
DV2_VALID
DV3_CLK
DV3_DATA_4
DV3_DATA_7
DV3_VALID
DV3_DATA_8
DV3_DATA_3
DV3_DATA_1
DV3_DATA_6
DV3_DATA_0
DV3_DATA_5
DV3_DATA_2
DV3_DATA_9
UJ00B PNX2017
DDR INTERFACE
LVDS_AN
LVDS_AP
LVDS_BN
LVDS_BP
LVDS_CN
LVDS_CP
LVDS_DN
LVDS_DP
LVDS_EN
LVDS_EP
LVDS_CLKN
LVDS_CLKP
RGB_CLK_IN
RGB_UD
RGB_HSYNC
RGB_VSYNC
RGB_DE
TXPNXA-
TXPNXA+
TXPNXB-
TXPNXB+
TXPNXC-
TXPNXC+
TXPNXD-
TXPNXD+
TXPNXE-
TXPNXE+
TXPNXCLK-
TXPNXCLK+
MP-CLKOUT
MP-OUT-FFIELD
MP-OUT-HS
MP-OUT-VS
MP-OUT-DE
RxIN0-
RxIN0+
RxIN1-
RxIN1+
RxIN2-
RxIN2+
RxCLKIN-
RxCLKIN+
RxIN3-
RxIN3+
RxIN4-
RxIN4+
PG50
CON30
LVDS port
VDISP
CTRL-DISP1
BACKLIGHT-CNTRL-OUT
BACKLIGHT
SCL-I2C4-DISP
SDA-I2C4-DISP
UJ00A PNX2017
TUNNELBUS
TUNN_TX_BUSY
TUNN_TX_CLKN
TUNN_TX_CLKP
TUNN_TX_D0
TUNN_TX_D1
TUNN_TX_D2
TUNN_TX_D3
TUNN_TX_D4
TUNN_TX_D5
TUNN_TX_D6
TUNN_TX_D7
TUNN_TX_D8
TUNN_TX_D9
TUNN_TX_D10
TUNN_TX_D11
TUNN_TX_D12
TUNN_TX_D13
TUNN_TX_D14
TUNN_TX_D15
TUNN_RX_D0
TUNN_RX_D1
TUNN_RX_D2
TUNN_RX_D3
TUNN_RX_D4
TUNN_RX_D5
TUNN_RX_D6
TUNN_RX_D7
TUNN_RX_D8
TUNN_RX_D9
TUNN_RX_D10
TUNN_RX_D11
TUNN_RX_D12
TUNN_RX_D13
TUNN_RX_D14
TUNN_RX_D15
TUNN_RX_BUSY
TUNN_RX_CLKN
TUNN_RX_CLKP
TUNN_REF
TUNS_TX_BUSY
TUNS_TX_CLKN
TUNS_TX_CLKP
TUNS_TX_D0
TUNS_TX_D1
TUNS_TX_D2
TUNS_TX_D3
TUNS_TX_D4
TUNS_TX_D5
TUNS_TX_D6
TUNS_TX_D7
TUNS_TX_D8
TUNS_TX_D9
TUNS_TX_D10
TUNS_TX_D11
TUNS_TX_D12
TUNS_TX_D13
TUNS_TX_D14
TUNS_TX_D15
TUNS_RX_D0
TUNS_RX_D1
TUNS_RX_D2
TUNS_RX_D3
TUNS_RX_D4
TUNS_RX_D5
TUNS_RX_D6
TUNS_RX_D7
TUNS_RX_D8
TUNS_RX_D9
TUNS_RX_D10
TUNS_RX_D11
TUNS_RX_D12
TUNS_RX_D13
TUNS_RX_D14
TUNS_RX_D15
TUNS_RX_BUSY
TUNS_RX_CLKN
TUNS_RX_CLKP
TUNS_REF
TUN-VIPER-RX-BUSY
TUN-VIPER-RX-CLKN
TUN-VIPER-RX-CLKP
TUN-VIPER-RX-DATA0
TUN-VIPER-RX-DATA1
TUN-VIPER-RX-DATA2
TUN-VIPER-RX-DATA3
TUN-VIPER-RX-DATA4
TUN-VIPER-RX-DATA5
TUN-VIPER-RX-DATA6
TUN-VIPER-RX-DATA7
TUN-VIPER-RX-DATA8
TUN-VIPER-RX-DATA9
TUN-VIPER-RX-DATA10
TUN-VIPER-RX-DATA11
TUN-VIPER-RX-DATA12
TUN-VIPER-RX-DATA13
TUN-VIPER-RX-DATA14
TUN-VIPER-RX-DATA15
TUN-VIPER-TX-DATA0
TUN-VIPER-TX-DATA1
TUN-VIPER-TX-DATA2
TUN-VIPER-TX-DATA3
TUN-VIPER-TX-DATA4
TUN-VIPER-TX-DATA5
TUN-VIPER-TX-DATA6
TUN-VIPER-TX-DATA7
TUN-VIPER-TX-DATA8
TUN-VIPER-TX-DATA9
TUN-VIPER-TX-DATA10
TUN-VIPER-TX-DATA11
TUN-VIPER-TX-DATA12
TUN-VIPER-TX-DATA13
TUN-VIPER-TX-DATA14
TUN-VIPER-TX-DATA15
TUN-VIPER-TX-BUSY
TUN-VIPER-TX-CLKN
TUN-VIPER-TX-CLKP
VREF-PNX
UJ00I PNX2017
GND
UJ00H PNX2017
SUPPLY
C1V2_VDD1
C1V2_VDD2
C1V2_VDD3
C1V2_VDD4
C1V2_VDD5
C1V2_VDD6
C1V2_VDD7
C1V2_VDD8
C1V2_VDD9
C1V2_VDD10
C1V2_VDD11
C1V2_VDD12
C1V2_VDD13
C1V2_VDD14
C1V2_VDD15
C1V2_VDD16
C1V2_VDD17
C1V2_VDD18
C1V2_VDD19
C1V2_VDD20
C1V2_VDD21
C1V2_VDD22
C1V2_VDD23
C1V2_VDD24
C1V2_VDD25
C1V2_VDD26
C1V2_VDD27
C1V2_VDD28
P3V3VDD_1
P3V3VDD_2
P3V3VDD_3
P3V3VDD_4
P3V3VDD_5
P3V3VDD_6
P3V3VDD_7
P3V3VDD_8
P3V3VDD_9
P3V3VDD_11
P3V3VDD_12
P3V3VDD_13
P3V3VDD_14
P3V3VDD_15
P3V3VDD_16
P3V3VDD_17
P3V3VDD_18
P3V3VDD_19
SB1V2VDD_1
SB1V2VDD_2
SB1V2VDD_3
SB1V2VDD_4
SB1V2VDD_5
SB1V2VDD_6
SB1V2VDD_7
SB3V3VDD_1
SB3V3VDD_2
SB3V3VDD_3
SB3V3VDD_4
SB3V3VDD_5
P2V5VDD_1
P2V5VDD_2
P2V5VDD_3
P2V5VDD_4
P2V5VDD_5
P2V5VDD_6
P2V5VDD_7
P2V5VDD_8
P2V5VDD_9
P2V5VDD_10
P2V5VDD_11
P2V5VDD_12
P2V5VDD_13
P2V5VDD_14
P2V5VDD_15
P2V5VDD_16
P2V5VDD_17
P2V5VDD_18
P2V5VDD_19
P2V5VDD_20
P2V5VDD_21
P2V5VDD_22
P2V5VDD_23
P2V5VDD_24
VDD_LVDS_1
VDD_LVDS_2
VDD_LVDS_3
VDD_LVDS_4
VDDA_SYS_PLL
VCCA_LVDS_PLL
VDDA_1_7_MCAB
VCCA_USPLL
ADC_VSSA
ADC3V3DDA
AVDD_MCAB
AVSS_MCBA
ADAC_3V3
+3V3
+1V2
+2V5
+2V5-DDRPNX
+3V3-STANDBY
+1V2-STANDBY
LVDS-3V3
PLL-1V2
PLL-3V3
UP-3V3
LLN0
LLN1
LLN2
LLN3
LLN4
LLS01
600 OHM

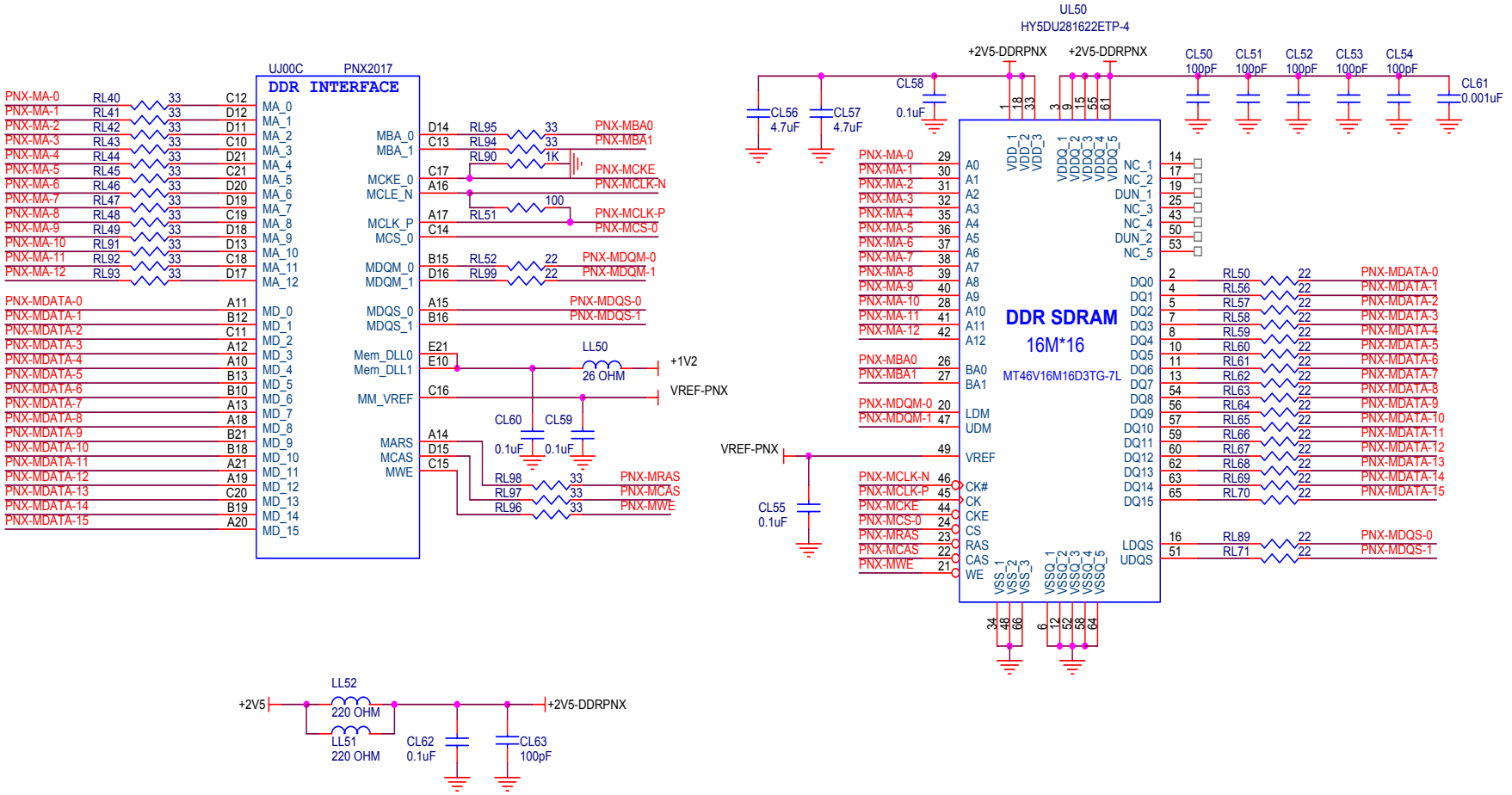

Title			
Size B	Document Number W2607C(DAO)	715T1796-D	Rev 0.4
Date: Thursday, March 09, 2006	Sheet 17 of 25		

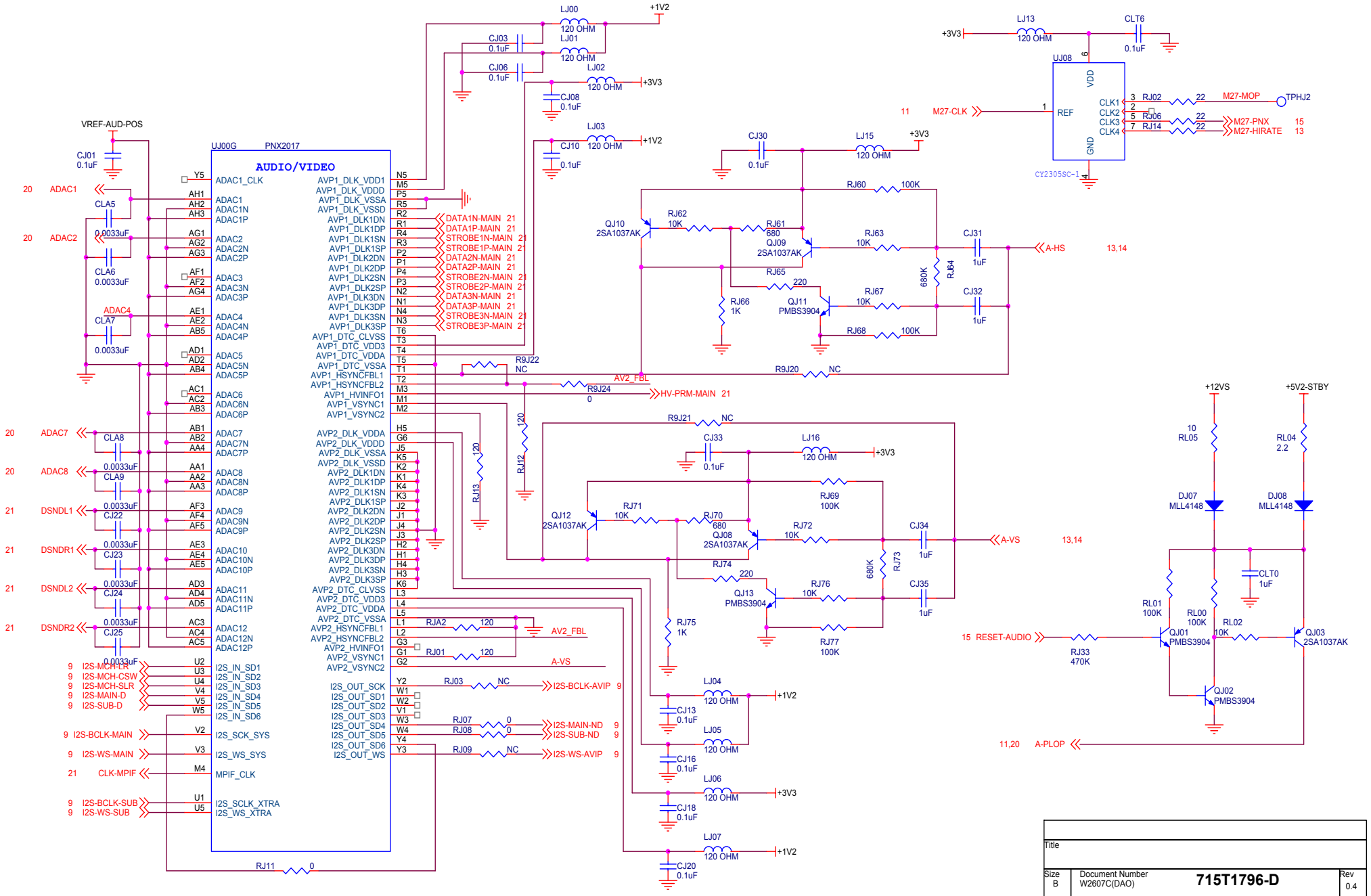
AUDIO/VIDEO
UJ00G
PNX2017
VREF-AUD-POS
CJ01 0.1uF
ADAC1_CLK
ADAC1
ADAC1N
ADAC1P
ADAC2
ADAC2N
ADAC2P
ADAC3
ADAC3N
ADAC3P
ADAC4
ADAC4N
ADAC4P
ADAC5
ADAC5N
ADAC5P
ADAC6
ADAC6N
ADAC6P
ADAC7
ADAC7N
ADAC7P
ADAC8
ADAC8N
ADAC8P
ADAC9
ADAC9N
ADAC9P
ADAC10
ADAC10N
ADAC10P
ADAC11
ADAC11N
ADAC11P
ADAC12
ADAC12N
ADAC12P
I2S_IN_SD1
I2S_IN_SD2
I2S_IN_SD3
I2S_IN_SD4
I2S_IN_SD5
I2S_IN_SD6
I2S_SCK_SYS
I2S_WS_SYS
MPIF_CLK
I2S_SCK_XTRA
I2S_WS_XTRA
I2S_OUT_SCK
I2S_OUT_SD1
I2S_OUT_SD2
I2S_OUT_SD3
I2S_OUT_SD4
I2S_OUT_SD5
I2S_OUT_SD6
I2S_OUT_WS
AVP1_DLK_VDD1
AVP1_DLK_VDDD
AVP1_DLK_VSSA
AVP1_DLK_VSSD
AVP1_DLK1DN
AVP1_DLK1DP
AVP1_DLK1SN
AVP1_DLK1SP
AVP1_DLK2DN
AVP1_DLK2DP
AVP1_DLK2SN
AVP1_DLK2SP
AVP1_DLK3DN
AVP1_DLK3DP
AVP1_DLK3SN
AVP1_DLK3SP
AVP1_DTC_CLVSS
AVP1_DTC_VDD3
AVP1_DTC_VDDA
AVP1_DTC_VSSA
AVP1_HSYNCFBL1
AVP1_HSYNCFBL2
AVP1_HVINFO1
AVP1_VSYNC1
AVP1_VSYNC2
AVP2_DLK_VDDA
AVP2_DLK_VDDD
AVP2_DLK_VSSA
AVP2_DLK_VSSD
AVP2_DLK1DN
AVP2_DLK1DP
AVP2_DLK1SN
AVP2_DLK1SP
AVP2_DLK2DN
AVP2_DLK2DP
AVP2_DLK2SN
AVP2_DLK2SP
AVP2_DLK3DN
AVP2_DLK3DP
AVP2_DLK3SN
AVP2_DLK3SP
AVP2_DTC_CLVSS
AVP2_DTC_VDD3
AVP2_DTC_VDDA
AVP2_DTC_VSSA
AVP2_HSYNCFBL1
AVP2_HSYNCFBL2
AVP2_HVINFO1
AVP2_VSYNC1
AVP2_VSYNC2
DATA1N-MAIN
DATA1P-MAIN
STROBE1N-MAIN
STROBE1P-MAIN
DATA2N-MAIN
DATA2P-MAIN
STROBE2N-MAIN
STROBE2P-MAIN
DATA3N-MAIN
DATA3P-MAIN
STROBE3N-MAIN
STROBE3P-MAIN
HV-PRM-MAIN
AV2_FBL
A-VS
I2S-BCLK-AVIP
I2S-MAIN-ND
I2S-SUB-ND
I2S-WS-AVIP
I2S-MCH-LR
I2S-MCH-CSW
I2S-MCH-SLR
I2S-MAIN-D
I2S-SUB-D
I2S-BCLK-MAIN
I2S-WS-MAIN
CLK-MPIF
I2S-BCLK-SUB
I2S-WS-SUB
ADAC1
ADAC2
ADAC4
ADAC5
ADAC6
ADAC7
ADAC8
DSNDL1
DSNDR1
DSNDL2
DSNDR2
CLA5
CLA6
CLA7
CLA8
CLA9
CJ22
CJ23
CJ24
CJ25
0.0033uF
LJ00 120 OHM
LJ01 120 OHM
LJ02 120 OHM
LJ03 120 OHM
CJ03 0.1uF
CJ06 0.1uF
CJ08 0.1uF
CJ10 0.1uF
+1V2
+3V3
RJA2 120
RJ01 120
RJ03 NC
RJ07 0
RJ08 0
RJ09 NC
RJ11 0
RJ12 120
RJ13 120
R9J22 NC
R9J24 0
R9J20 NC
R9J21 NC
LJ13 120 OHM
CLT6 0.1uF
UJ08
CY2305SC-1
M27-CLK
M27-MOP
M27-PNX
M27-HIRATE
TPHJ2
RJ02 22
RJ06 22
RJ14 22
CJ30 0.1uF
LJ15 120 OHM
RJ60 100K
RJ62 10K
RJ61 680
RJ63 10K
RJ64 680K
RJ65 220
RJ66 1K
RJ67 10K
RJ68 100K
QJ10 2SA1037AK
QJ09 2SA1037AK
QJ11 PMBS3904
CJ31 1uF
CJ32 1uF
A-HS
CJ33 0.1uF
LJ16 120 OHM
RJ69 100K
RJ70 680
RJ71 10K
RJ72 10K
RJ73 680K
RJ74 220
RJ75 1K
RJ76 10K
RJ77 100K
QJ12 2SA1037AK
QJ08 2SA1037AK
QJ13 PMBS3904
CJ34 1uF
CJ35 1uF
A-VS
LJ04 120 OHM
LJ05 120 OHM
LJ06 120 OHM
LJ07 120 OHM
CJ13 0.1uF
CJ16 0.1uF
CJ18 0.1uF
CJ20 0.1uF
+12VS
+5V2-STBY
RL05 10
RL04 2.2
DJ07 MLL4148
DJ08 MLL4148
CLT0 1uF
RL01 100K
RL00 100K
RL02 10K
RJ33 470K
QJ01 PMBS3904
QJ02 PMBS3904
QJ03 2SA1037AK
RESET-AUDIO
A-PLOP
Title
Size B
Document Number W2607C(DAO)
715T1796-D
Rev 0.4
Date: Thursday, March 09, 2006
Sheet 18 of 25

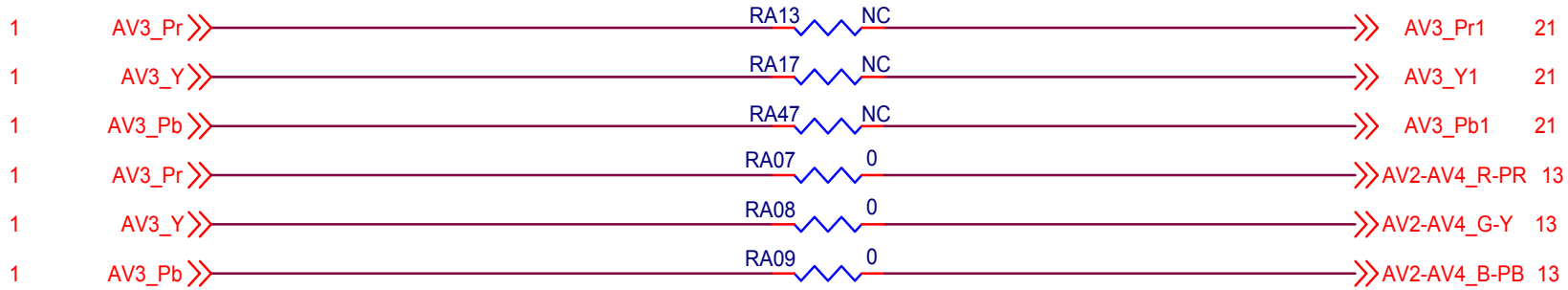

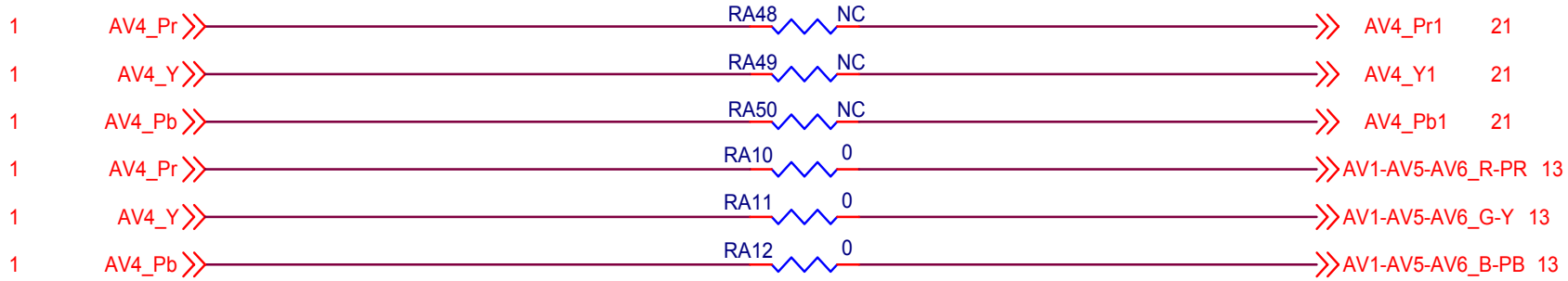

Title			
Size A	Document Number W2607C(DAO)	**715T1796-D**	Rev 0.4
Date: Thursday, March 09, 2006	Sheet 19 of 25		

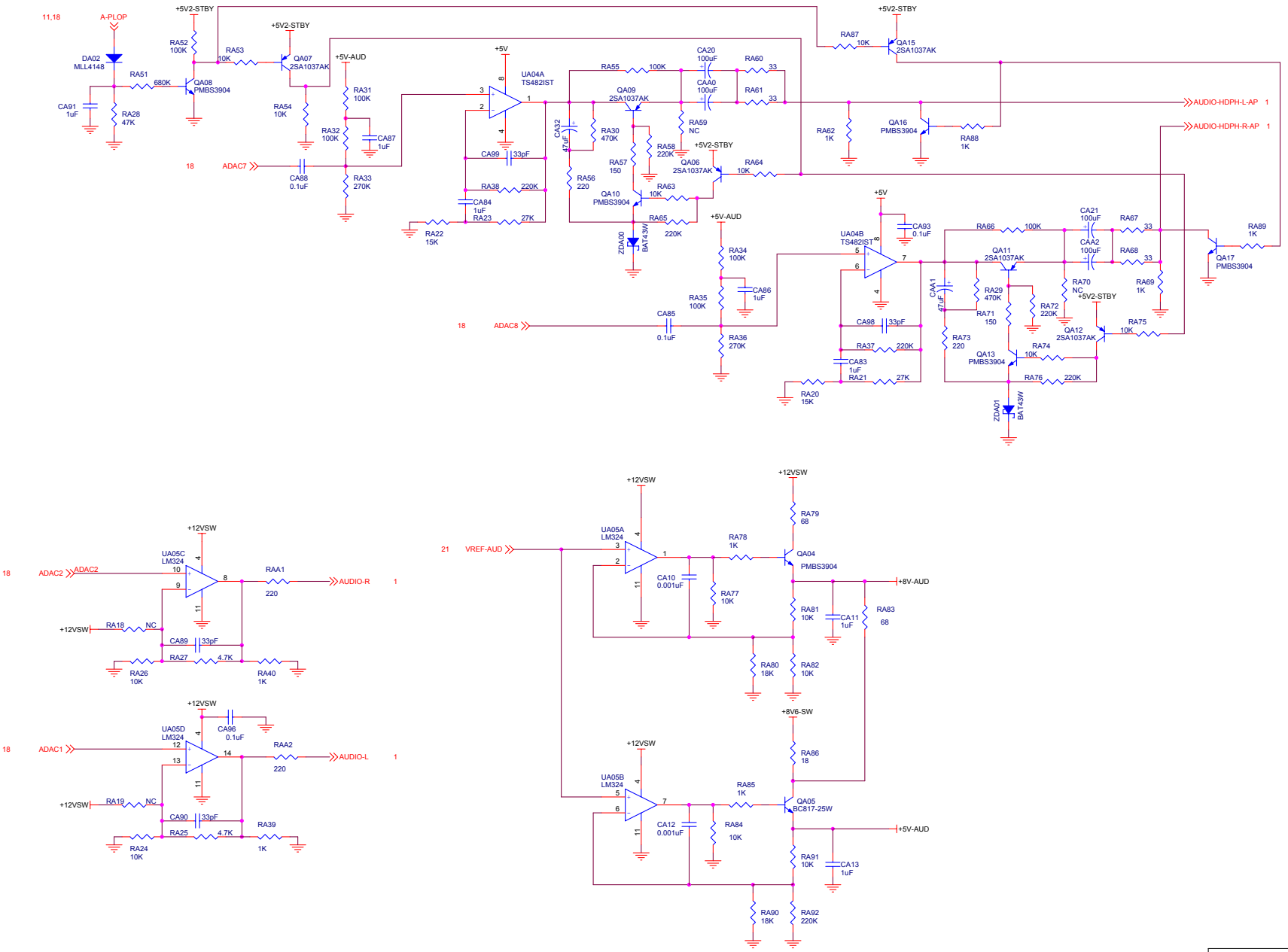

Title			
Size C	Document Number W2607C(DAO)	715T1796-D	Rev 0.4
Date: Thursday, March 09, 2006	Sheet 20 of 25		

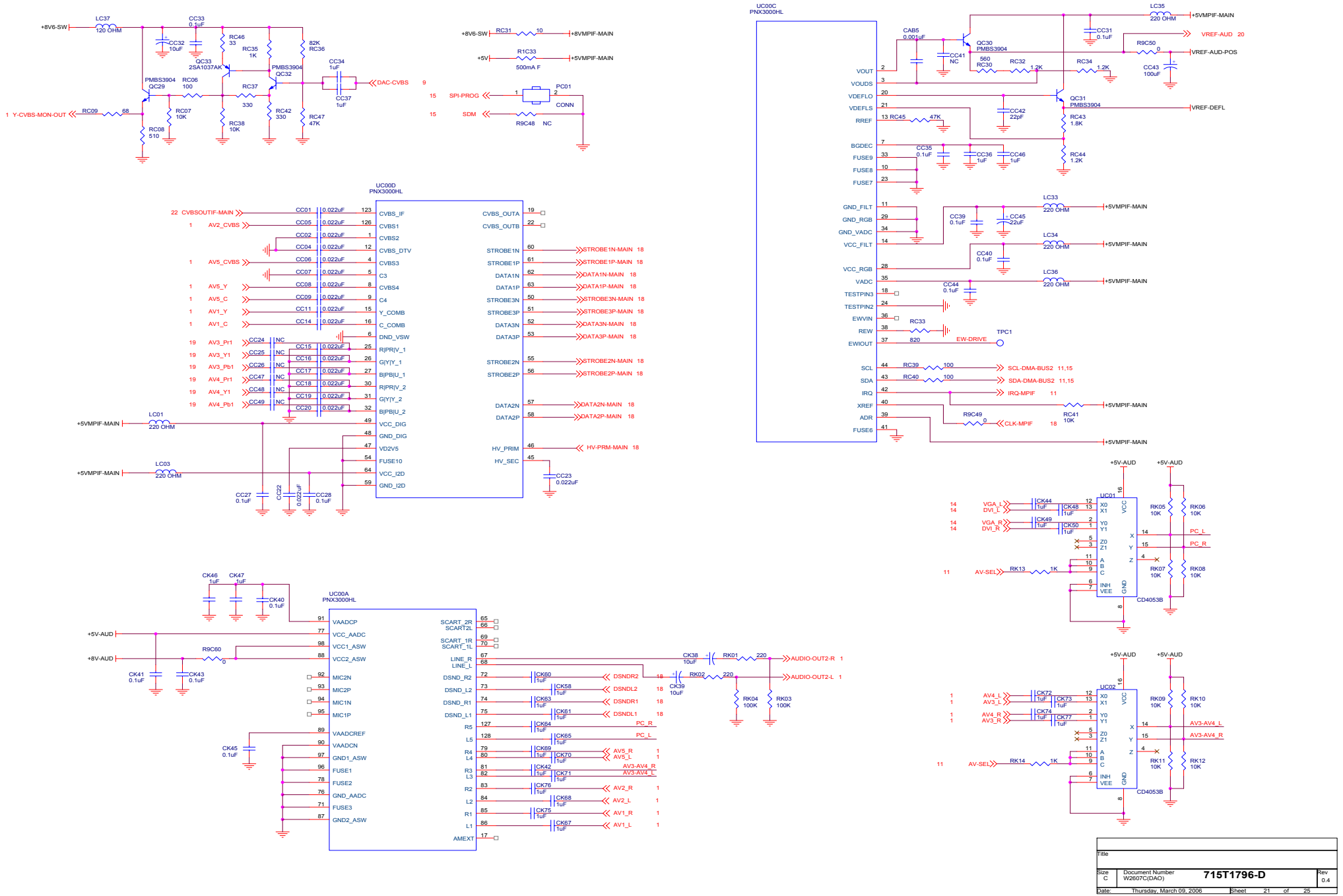

Title			
Size C	Document Number W2607C(DAO)	715T1796-D	Rev 0.4
Date: Thursday, March 09, 2006	Sheet 21 of 25		

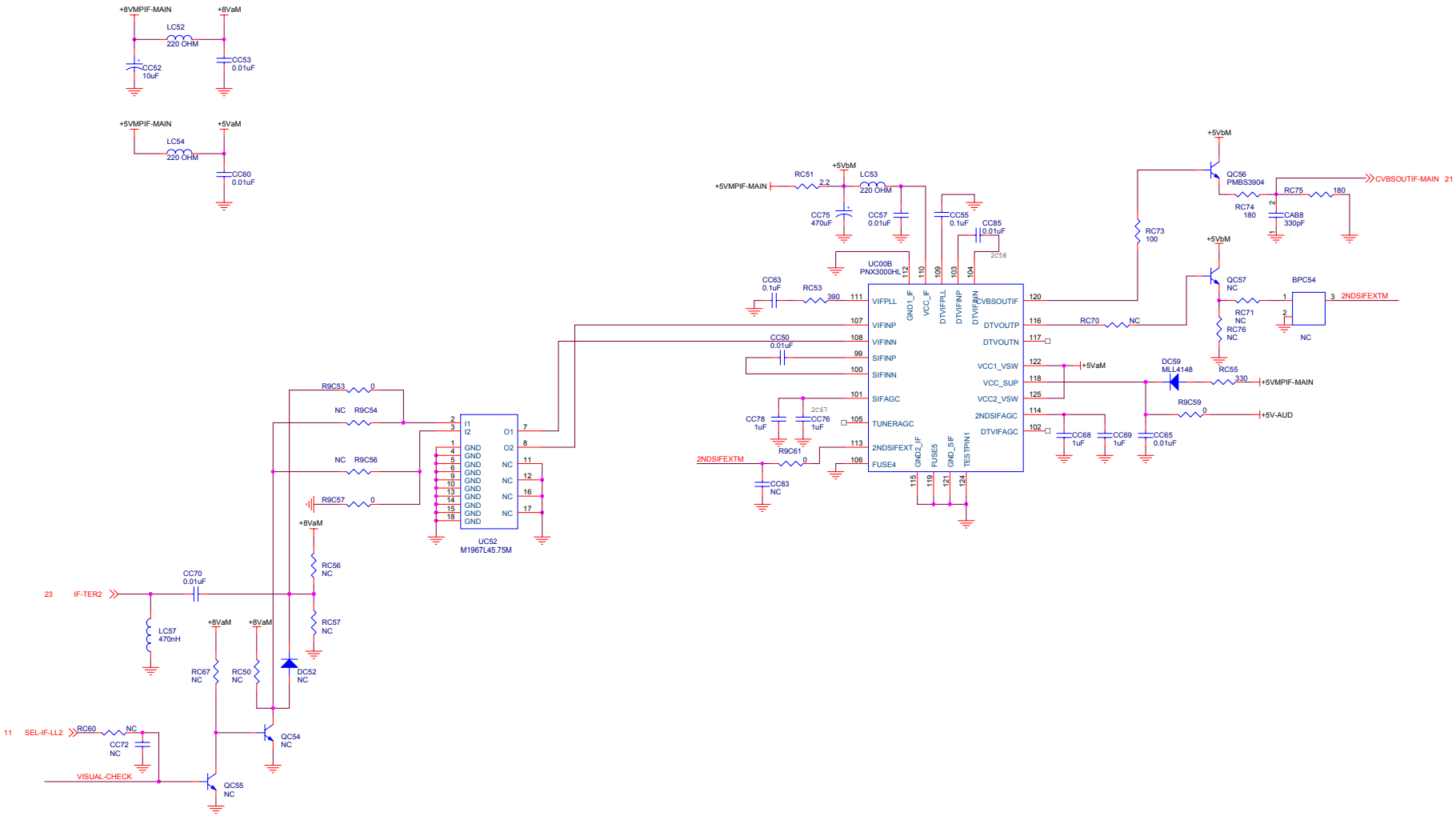

Title			
Size C	Document Number W2607C(DAO)	715T1796-D	Rev 0.4
Date: Thursday, March 09, 2006	Sheet 22 of 25		

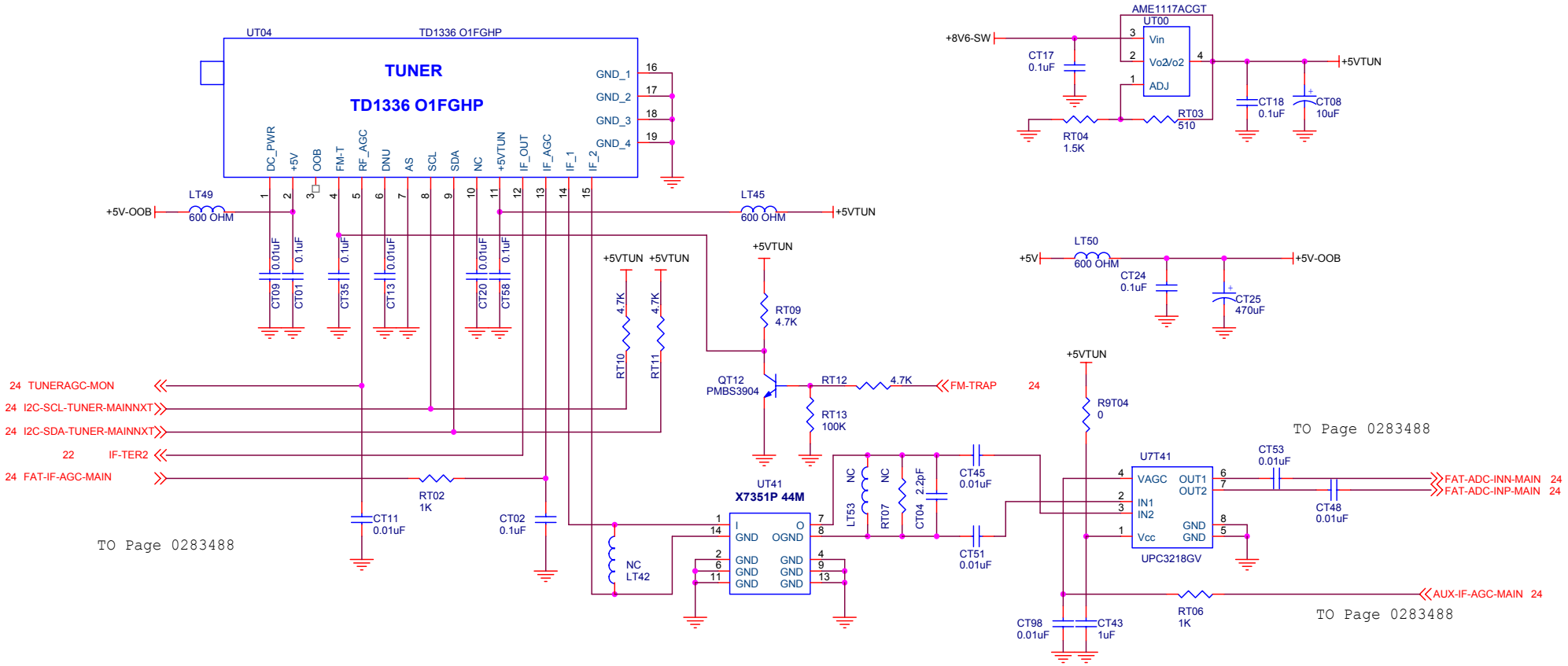

Title			
Size B	Document Number W2607C(DAO)	715T1796-D	Rev 0.4
Date: Thursday, March 09, 2006	Sheet 23 of 25		

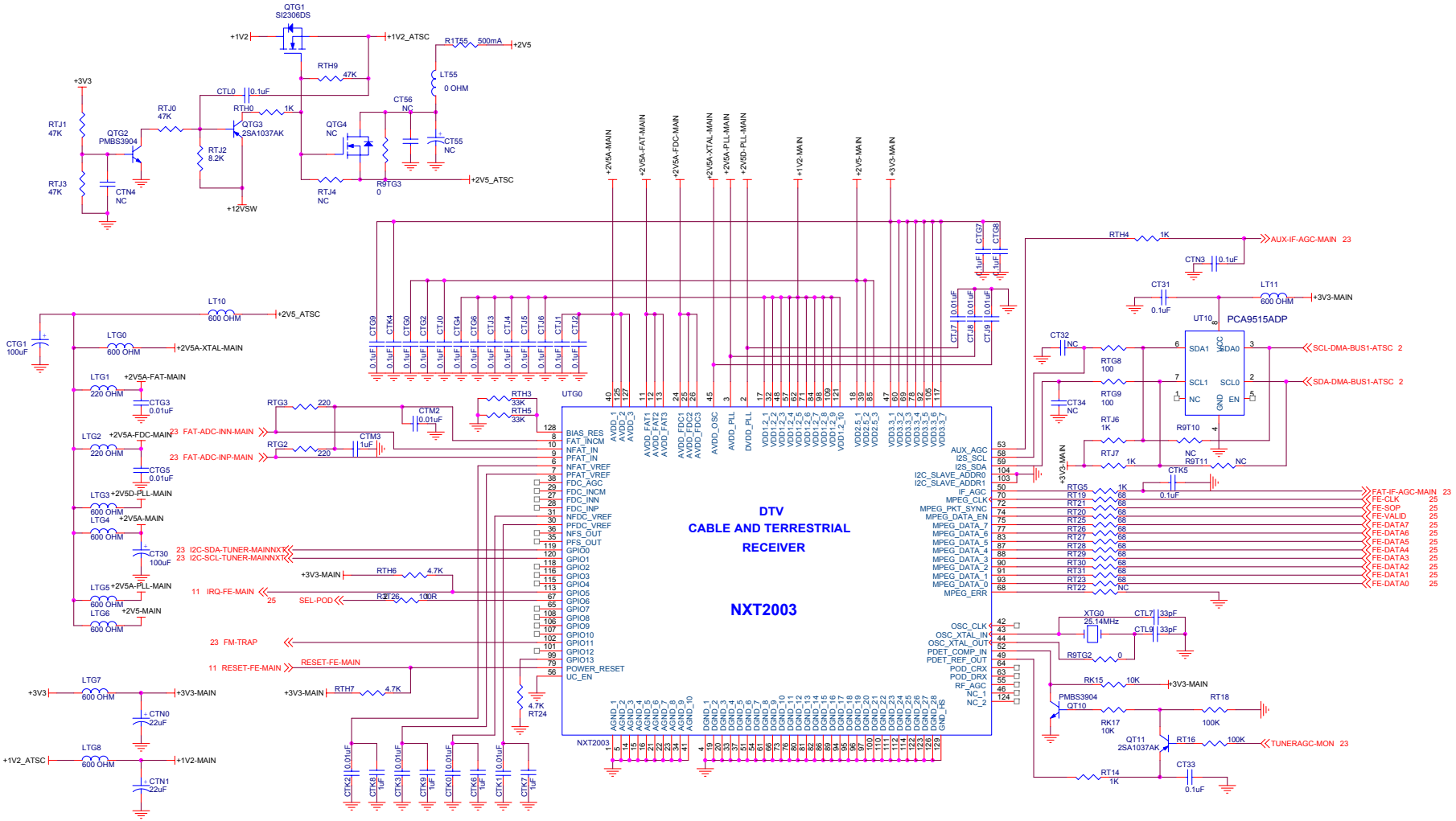

Title			
Size C	Document Number W2607C(DAO)	715T1796-D	Rev 0.4
Date: Thursday, March 09, 2006	Sheet 24 of 25		

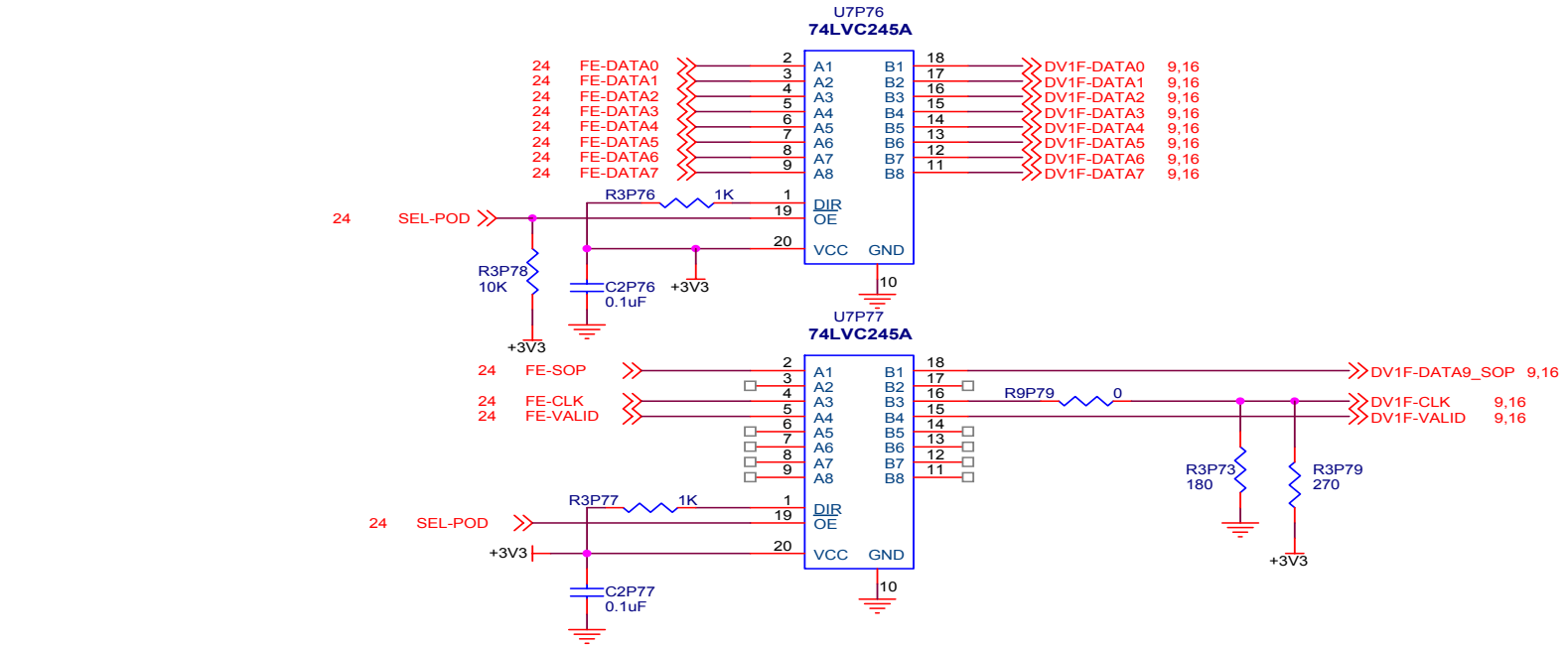

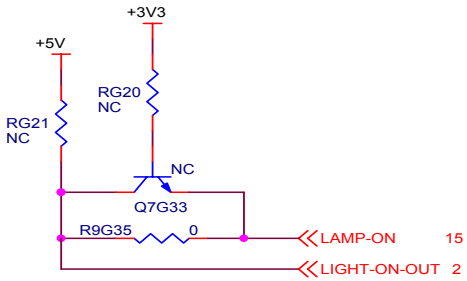

Title			
Size B	Document Number W2607C(DAO)	715T1796-D	Rev 0.4
Date: Thursday, March 09, 2006	Sheet 25 of 25		

12.2 Power Board

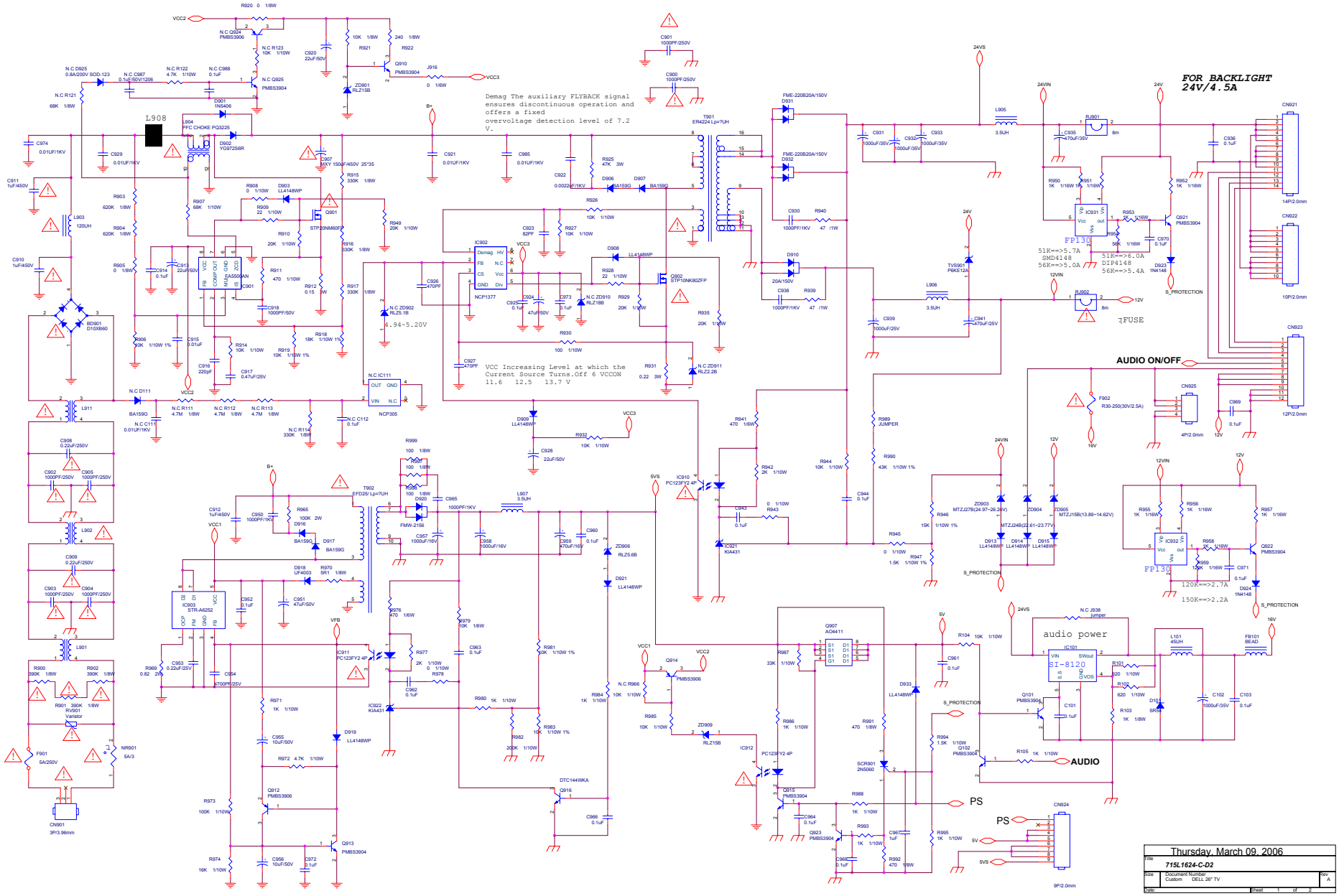

13.BOM List

EEF5GHNKDEDMJMP

Loccation	Part Number	Description
	011T 182 1	WIRE HOLDER
	011T 182 1	WIRE HOLDER
	015T8288 1	MAINFRAME
	023T3178700 4A	DELL LOGO
	026T 800700 7A	S/N LABEL BOX 20MM
	037T 544 1 TH	HINGE
	040T 581 26704	SHIPPING LABEL
	040T 581700 3A6813	CARTON LABEL
	044T2601 1	EPS
	044T2601 2	EPS
	044T3231 15	EVA WASHER
	044T6000 4 6B	SPACE PAPER
	044T6002834 9A	PAPER BOARD
	044T9003 96	CORNER PAPER
	044T9003120	CORNER PAPER
	045T 77 3	PE PACKING
	045T 99626DE2	PE BAG FOR MONITOR
	049T 51 1A	ERADICATOR
	050T 500 1	CABLE TIE
	050T 500 1	CABLE TIE
	052T 1186	SMALL TAPE
	052T 2191 A	TAPE
	052T6019 1	yellow tape
	078T 446 3 L	SPK 8OHM 15W NeoSonica
	078T 446 3 R	SPK 8OHM 15W NeoSonica
	085T 730 1	SHIELDING
	089T 173 56 41	RCA CABLE
	089T 173 56538	RF CABLE
	089T 173 56544	AUDIO CABLE
E08901	089T402A18N CX	POWER CORD
	092TB1JX1A31GM	PEONY A1KALINE LR03
	095T8014 5561	WIRE HARNESS
	095T8014 10523	WIRE HARNESS
	095T8014 12 45	HARNESS 12P_10P 300MM
	095T8014 13608	WIRE HARNESS
	095T8014 14653	WIRE HARNESS
	095T8014 14658	WIRE HARNESS
	095T8014 16679	WIRE HARNESS
	095T8014 20503	WIRE HARNESS
	095T8018 30719	LVDS CABLE
	098TR7BDJNEDLI	NO APP,REMOTE CONTROL
	0M1T 130 5120	SCREW
	0M1T 130 5120	SCREW
	0M1T 130 5120	SCREW
	0M1T 130 5120	SCREW
	0M1T 330 4120	SCREW
	0M1T1140 6120	SCREW 4*6MM
	0M1T1730 6120	SCREW 3*6MM
	0M1T1730 6120	SCREW 3*6MM
	0M1T1730 6120	SCREW 3*6MM
	0M1T1730 6120	SCREW 3*6MM
	705LEF5FB34010	26" LCD TV ASS'Y

	002T6022 1	SCREW NUTS
	015T8289 1 TH	BKT-PC-DAO
	088T 400 1 JC	NO APP,YAA41-0181N
	095T8014 3 22	NO APP HARNESS
	0M1T 130 6 47 GP	SCREW
	Q03T1122120	WASHER
	QQ1T 330 6 47 GP	SCREW
	705LEF5FB34011	BACK COVER ASS'Y
	015T6268 1	KEY HOLDER
	033T4904 H0 C	KEY PAD
	033T4910 ED C	IRLENS
	033TD601 H0 L	TRIM TOP
	033TD602 H0 L	TRIM SIDE
	034T1671ACW T	BEZEL
	034T1778ATH T	REAR COVER
	036T 700 6 TH	SPEAKER GRILL
	044T3121510512	SPONGE
	044T3121510514	SPONGE
	095T 900590	HARNESS
	0M1T1730 6120	SCREW 3*6MM
	0Q1T 330 5120	SCREW
	0Q1T 330 8120	SCREW 3X8mm
	KEPFEKA1P	KEY BOARD
	011T7005 1	SUPPORT BELT
U1	056T 627 14	NO APP KSM-2003LN2E BY KOD
CN1	033T803410C	WAFER 1.0MM SMT 10P
Q2	057T 417 4	CHIP PMBS3904 BY PHILIPS
Q1	057T 417 4	CHIP PMBS3904 BY PHILIPS
R8	061T0603000	CHIP 0OHM 1/16W
R5	061T0603100 1F	RST CHIPR 1 KOHM +-1% 1/10W
R10	061T0603101	CHIP 100OHM 1/16W
R14	061T0603103	CHIP 10KOHM 1/16W
R11	061T0603103	CHIP 10KOHM 1/16W
R4	061T0603120 0F	RST CHIPR 120 OHM +-1% 1/10W
R12	061T0603201	RST CHIPR 200 OHM +-5% 1/10W
R6	061T0603220 0F	RST CHIPR 220 OHM +-1% 1/10W
R7	061T0603220 1F	RST CHIPR 2.2 KOHM +-1% 1/10W
R15	061T0603301	RST CHIPR 300OHM +-5% 1/10W
R13	061T0603301	RST CHIPR 300OHM +-5% 1/10W
R2	061T0603330 1F	RST CHIPR 3.3 KOHM +-1% 1/10W
R1	061T0603390 0F	RST CHIPR 390 OHM +-1% 1/10W
R3	061T0603430 0F	RST CHIPR 430 OHM +-1% 1/10W
R9	061T0603431	RST CHIPR 430 OHM +-5% 1/10W
C7	065T0603101 32	CHIP 100PF 50V X7R
C1	065T0603104 32	CHIP 0.1UF 50V X7R
C10	065T0603104 32	CHIP 0.1UF 50V X7R
C11	065T0603104 32	CHIP 0.1UF 50V X7R
C2	065T0603104 32	CHIP 0.1UF 50V X7R
C6	065T0603104 32	CHIP 0.1UF 50V X7R
C9	065T0603104 32	CHIP 0.1UF 50V X7R
C8	065T0805475 A5	CHIP 4.7UF 10V X5R
FB1	071T 56G151 B	BEAD 0805 150 OHM
FB6	071T 59B601 EA	CHIP BEAD 600OHM 0603 TB1608
FB5	071T 59B601 EA	CHIP BEAD 600OHM 0603 TB1608
FB4	071T 59B601 EA	CHIP BEAD 600OHM 0603 TB1608
FB3	071T 59B601 EA	CHIP BEAD 600OHM 0603 TB1608
S7	077T 604 3 CJ	CHIP TACT SW TSUA-3SP-NP

S6	077T 604 3 CJ	CHIP TACT SW TSUA-3SP-NP
S5	077T 604 3 CJ	CHIP TACT SW TSUA-3SP-NP
S4	077T 604 3 CJ	CHIP TACT SW TSUA-3SP-NP
S3	077T 604 3 CJ	CHIP TACT SW TSUA-3SP-NP
S2	077T 604 3 CJ	CHIP TACT SW TSUA-3SP-NP
S1	077T 604 3 CJ	CHIP TACT SW TSUA-3SP-NP
D3	081T 14 12 KT	CHIP LED KTL-HKBB333B-TRB
D2	093T 6433P	BAV99
D1	093T 6433P	BAV99
ZD1	093T 39S 24 T	RLZ 5.6B LLDS
	715T1843 1	KEPC PCB
	PTPFDA4P	SIDE BOARD
CN1	033T380213H	WAFER 13P RIGHT ANGLE PITCH
CN4	088T 78 1319C	RCA JACK 1*3 R/W/Y
CN3	088T 100 9 CL	MINI DIN JACK 4P+SWITCH
CN2	088T 30231T CJ	PHONE JACK
R2	061T0603473	CHIP 47KOHM 1/16W
R1	061T0603473	CHIP 47KOHM 1/16W
C5	065T0603471 31	CHIP 470PF 50V NPO
C4	065T0603471 31	CHIP 470PF 50V NPO
C3	065T0603472 32	CHIP 4700PF 50V X7R
C2	065T0603472 32	CHIP 4700PF 50V X7R
C1	065T0603472 32	CHIP 4700PF 50V X7R
C7	065T0603680 31	CHIP 68PF 50V NPO
C6	065T0603680 31	CHIP 68PF 50V NPO
C9	065T0603680 31	CHIP 68PF 50V NPO
FB8	071T 56G151 A	CHIOP BEAD 150 OHM
FB9	071T 56G151 A	CHIOP BEAD 150 OHM
FB7	071T 56G151 A	CHIOP BEAD 150 OHM
FB5	071T 56Z601	CHIP BEAD 600 OHM
FB4	071T 56Z601	CHIP BEAD 600 OHM
FB1	071T 59B121 K	CHIP BEAD
FB3	071T 59B121 K	CHIP BEAD
FB6	071T 59B121 K	CHIP BEAD
	715T1635 2	SIDE BOARD PCB
	705T 780 87 20	AC SOCKET ASS'Y
	005T6025 1	RUBBER COVER
	087T 501 7 RF GP	AC SOCKET
	095T 900 79	WIRE HARNESS
	095T8021 3523	WIRE HARNESS
	096T 29 6	SHRINK TUBE UL/CSA
	750TVGG0X21	PANEL LC260WX2-SL01 KR LPL
	ADPC24180B2D1P	ADAPTER BOARD
CN925	033T3802 4	WAFER PH-4
CN922	033T3802 10	PLUG
CN921	033T3802 14	CONN
CN901	033T8029 3A	WAFER 2P 3.96MM
	040T 45762412B	CBPC LABEL
IC910	056T 139 3A	IC PC123Y22FZ0F
IC911	056T 139 3A	IC PC123Y22FZ0F
IC912	056T 139 3A	IC PC123Y22FZ0F
IC903	056T 379 49	STR-A6252
RV901	061T 46 10	CARISTOR 560V TVR10561KFW
NR901	061T 58030 W	RST NTCR 3 OHM 5A THINKING
R969	061T152M828 64	0.82OHM 2W
C908	063T 10722410S	0.22UF 275VAC X2
C909	063T 10722410S	0.22UF 275VAC X2

C910	063T213J105GFA	MPF CAP
C911	063T213J105GFA	MPF CAP
C985	065T 1K102 2E6921	1KV 1000PF Y5P
C974	065T 1K102 2E6921	1KV 1000PF Y5P
C929	065T 1K102 2E6921	1KV 1000PF Y5P
C921	065T 1K102 2E6921	1KV 1000PF Y5P
C902	065T306K3312BP	330PF K 250VAC
C903	065T306K3312BP	330PF K 250VAC
C904	065T306K3312BP	330PF K 250VAC
C905	065T306K3312BP	330PF K 250VAC
C900	065T306M1022BP	Y1.CAP.001UF 250VAC
C901	065T306M1022BP	Y1.CAP.001UF 250VAC
C907	067T 40A15115R	450MXY 150M EFC FN
C957	067T215L102 3R	LOW E.S.R 1000UF +-20% 16V
C958	067T215L102 3R	LOW E.S.R 1000UF +-20% 16V
C939	067T215L102 4N	KY25VB1000M-L 12.5*20
C931	067T215L102 6N	EC 1000UF 35V KY35VB1000M-L 12.5*25mm
C932	067T215L102 6N	EC 1000UF 35V KY35VB1000M-L 12.5*25mm
C933	067T215L102 6N	EC 1000UF 35V KY35VB1000M-L 12.5*25mm
C102	067T215L102 6N	EC 1000UF 35V KY35VB1000M-L 12.5*25mm
C959	067T215L471 3N	YF16VB470M-L 10*12.5
C941	067T215L471 4N	KY25VB470M-L10*16
C935	067T215L471 6N	KY35VB470M-L 10*20MM
FB101	071T 55 29	BEAD
L902	073L 174 49LSG	LINE FILTER
L904	073T 174 69 L	430UH @ 40KHZ PFC CHOKE ERL28
L903	073T 174 70 L	120UH
L911	073T 174 78 H	LINE FILTER
L901	073T 174 78 H	LINE FILTER
L905	073T 253150 L	CHOCK
L101	073T 253151 LA	CHOKE COIL
L907	073T 253155 L	CHOKE
L906	073T 253155 L	CHOKE
T901	080TL23T 3 LS	X'FMR
T902	080TL23T 4 LS	X'FMR
HS6	090T6119 3	HEAT SINK
TVS901	093T 3916452T	P6KE12A D0-204AC
RJ901	095T 90 27	WIRE HARNESS
CN924	095T8014 9 51	WIRE HARNESS
CN923	095T8014 12 47	WIRE HARNESS
	705G 20 61 03	R965 ASS'Y
R965	061T152M10458F	100K OHM 5%2W
	096T 29 6	SHRINK TUBE UL/CSA
	705G 20 61 08	R912 ASS'Y
R912	061T153M158 59	0.15OHM 3W
	096T 29 1	SHRINK TUBE UL/CSA
	705G 20 61 11	R931 ASS'Y
R931	061T153M228 59	0.22 OHM 3W
	096T 29 1	SHRINK TUBE UL/CSA
	705G 20 61 12	R925 ASS'Y
R925	061T153M47358F	47K OHM 5% 3W
	096T 29 8	TUBE
	705G 20 93 14	D920 ASS'Y
HS3	090T 426501	HEAT SINK
D920	093T1506 2	FMW-2156
	0M1T1730 8120	SCREW
	705G 20 93 18	BD901 ASS'Y

HS7	090T 425502	HEAT SINK
BD901	093T 50460 18	D10XB60
	0M1T1730 10120	SCREW
	705G 20 93 19	D910 ASS'Y
HS4	090T 425502	HEAT SINK
D910	093T 60217	FMB-29L
	0M1T1730 8120	SCREW
	705G 20 93 22	D918 ASS'Y
D918	093T1020 752T	UF4003PT
	096T 29 1	SHRINK TUBE UL/CSA
	705G 20 93 23	D916 ASS'Y
D916	093T1100 1052T	BA159GPT
	096T 29 1	SHRINK TUBE UL/CSA
	705G 20 93 24	D901 ASS'Y
D901	093T 5241T52T	1N5406
	096T 29 2	SHRINK TUBE UL/CSA
	705G 20 93 26	D906 ASS'Y
D906	093T1100 1052T	BA159GPT
	096T 29 1	SHRINK TUBE UL/CSA
	705G 20 93 27	D907 ASS'Y
D907	093T1100 1052T	BA159GPT
	096T 29 1	SHRINK TUBE UL/CSA
	705G 20 93 28	D917 ASS'Y
D917	093T1100 1052T	BA159GPT
	096T 29 1	SHRINK TUBE UL/CSA
	705G 26 57 15	Q902 ASS'Y
	005T 42 3 GP	CUSHION
Q902	057T 667 26	STP12NK80Z
	090T 425600 GP	HEAT SINK
	0M1T1730 8120	SCREW
	Q12T 372 8	SILICON
	705G 26 93 17	D932/D931 ASS'Y
IC101	056T 563 54	SI-8120S
HS5	090T 426500	HEAT SINK
D931	093T 60258	FME-220B TO-220 SANKEN
D932	093T 60258	FME-220B TO-220 SANKEN
	0M1T1730 8120	SCREW
	705TQ757002	D902/Q901 ASS'Y
Q901	057T 667 24	STP20NM60 FP
HS1	090T 425501	HEAT SINK
D902	093T 220 23	DIODE FMX-G26S TO-220 SANKEN
	0M1T1730 8120	SCREW
IC931	056T 192 16	FP130KR-LF
IC902	056T 379 57	NCP1377BDR2G S0IC-8
IC901	056T 538 6	FA5500AN
Q925	057T 417 4	CHIP PMBS3904 BY PHILIPS
Q102	057T 417 4	CHIP PMBS3904 BY PHILIPS
Q101	057T 417 4	CHIP PMBS3904 BY PHILIPS
Q923	057T 417 4	CHIP PMBS3904 BY PHILIPS
Q921	057T 417 4	CHIP PMBS3904 BY PHILIPS
Q915	057T 417 4	CHIP PMBS3904 BY PHILIPS
Q913	057T 417 4	CHIP PMBS3904 BY PHILIPS
Q910	057T 417 4	CHIP PMBS3904 BY PHILIPS
Q914	057T 417 6	PMBS3906/PHILIPS-SMT
Q924	057T 417 6	PMBS3906/PHILIPS-SMT
Q912	057T 417 6	PMBS3906/PHILIPS-SMT
Q916	057T 760 5	DTC144WKA BY FOHM SMT

Q907	057T 763 29	FET AM4835P-T1-PF ANALOG POWER
R953	061T0603102	CHIP 1K OHM 1/16W
R952	061T0603102	CHIP 1K OHM 1/16W
R951	061T0603102	CHIP 1K OHM 1/16W
R950	061T0603102	CHIP 1K OHM 1/16W
R954	061T0603243	RST CHIPR 24 KOHM +-5% 1/10W
R945	061T0805000	RST CHIPR 0 OHM +-5% 1/8W
R943	061T0805000	RST CHIPR 0 OHM +-5% 1/8W
R908	061T0805000	RST CHIPR 0 OHM +-5% 1/8W
R978	061T0805000	RST CHIPR 0 OHM +-5% 1/8W
R906	061T0805100 2F	RST CHIPR 10 KOHM +-1% 1/8W
R919	061T0805100 2F	RST CHIPR 10 KOHM +-1% 1/8W
R981	061T0805100 2F	RST CHIPR 10 KOHM +-1% 1/8W
R983	061T0805100 2F	RST CHIPR 10 KOHM +-1% 1/8W
R984	061T0805101	RST CHIPR 100 OHM +-5% 1/8W
R930	061T0805101	RST CHIPR 100 OHM +-5% 1/8W
R105	061T0805102	RST CHIPR 1KOHM +-5% 1/4W
R995	061T0805102	RST CHIPR 1KOHM +-5% 1/4W
R993	061T0805102	RST CHIPR 1KOHM +-5% 1/4W
R986	061T0805102	RST CHIPR 1KOHM +-5% 1/4W
R980	061T0805102	RST CHIPR 1KOHM +-5% 1/4W
R971	061T0805102	RST CHIPR 1KOHM +-5% 1/4W
R944	061T0805103	RST CHIPR 10 KOHM +-5% 1/8W
R932	061T0805103	RST CHIPR 10 KOHM +-5% 1/8W
R927	061T0805103	RST CHIPR 10 KOHM +-5% 1/8W
R914	061T0805103	RST CHIPR 10 KOHM +-5% 1/8W
R123	061T0805103	RST CHIPR 10 KOHM +-5% 1/8W
R926	061T0805103	RST CHIPR 10 KOHM +-5% 1/8W
R104	061T0805103	RST CHIPR 10 KOHM +-5% 1/8W
R985	061T0805103	RST CHIPR 10 KOHM +-5% 1/8W
R973	061T0805104	RST CHIPR 100 KOHM +-5% 1/8W
R982	061T0805104	RST CHIPR 100 KOHM +-5% 1/8W
R947	061T0805150 1F	RST CHIPR 1.5 KOHM +-1% 1/8W
R946	061T0805150 2F	RST CHIPR 15 KOHM +-1% 1/8W
R994	061T0805152	RST CHIPR 1.5 KOHM +-5% 1/8W
R974	061T0805163	RST CHIPR 16 KOHM +-5% 1/8W
R918	061T0805180 2F	RST CHIPR 18 KOHM +-1% 1/8W
R942	061T0805202	RST CHIPR 2 KOHM +-5% 1/8W
R977	061T0805202	RST CHIPR 2 KOHM +-5% 1/8W
R949	061T0805203	RST CHIPR 20 KOHM +-5% 1/8W
R935	061T0805203	RST CHIPR 20 KOHM +-5% 1/8W
R928	061T0805220	RST CHIPR 22 OHM +-5% 1/8W
R988	061T0805223	RST CHIPR 22 KOHM +-5% 1/8W
R987	061T0805333	RST CHIPR 33 KOHM +-5% 1/8W
R990	061T0805430 2F	RST CHIPR 43 KOHM +-1% 1/8W
R909	061T0805470	RST CHIPR 47 OHM +-5% 1/8W
R911	061T0805471	RST CHIPR 470 OHM +-5% 1/8W
R122	061T0805472	RST CHIPR 4.7 KOHM +-5% 1/8W
R972	061T0805472	RST CHIPR 4.7 KOHM +-5% 1/8W
R102	061T0805621	RST CHIPR 620 OHM +-5% 1/8W
R101	061T0805621	RST CHIPR 620 OHM +-5% 1/8W
R907	061T0805683	RST CHIPR 68 KOHM +-5% 1/8W
R905	061T1206000	RST CHIPR 0 OHM +-5% 1/4W
R999	061T1206101	RST CHIPR 100 OHM +-5% 1/4W
R998	061T1206101	RST CHIPR 100 OHM +-5% 1/4W
R997	061T1206101	RST CHIPR 100 OHM +-5% 1/4W
R103	061T1206102	RST CHIPR 1 KOHM +-5% 1/4W

R921	061T1206103	RST CHIPR 10 KOHM +-5% 1/4W
R922	061T1206241	RST CHIPR 240 OHM +-5% 1/4W
R915	061T1206334	RST CHIPR 330 KOHM +-5% 1/4W
R916	061T1206334	RST CHIPR 330 KOHM +-5% 1/4W
R917	061T1206334	RST CHIPR 330 KOHM +-5% 1/4W
R900	061T1206394	RST CHIPR 390 KOHM +-5% 1/4W
R901	061T1206394	RST CHIPR 390 KOHM +-5% 1/4W
R902	061T1206394	RST CHIPR 390 KOHM +-5% 1/4W
R991	061T1206471	RST CHIPR 470 OHM +-5% 1/4W
R992	061T1206471	RST CHIPR 470 OHM +-5% 1/4W
R970	061T1206519	RST CHIPR 5.1 OHM +-5% 1/4W
R903	061T1206624	RST CHIPR 620 KOHM +-5% 1/4W
R904	061T1206624	RST CHIPR 620 KOHM +-5% 1/4W
R121	061T1206683	RST CHIPR 68 KOHM +-5% 1/4W
C970	065T0603104 32	CHIP 0.1UF 50V X7R
C918	065T0805102 32	CHIP 1000PF 50V X7R 0805
C915	065T0805103 32	10NF/50V/0805/X7R
C944	065T0805104 32	CHIP 0.1UF 50V X7R
C943	065T0805104 32	CHIP 0.1UF 50V X7R
C936	065T0805104 32	CHIP 0.1UF 50V X7R
C975	065T0805104 32	CHIP 0.1UF 50V X7R
C973	065T0805104 32	CHIP 0.1UF 50V X7R
C972	065T0805104 32	CHIP 0.1UF 50V X7R
C969	065T0805104 32	CHIP 0.1UF 50V X7R
C968	065T0805104 32	CHIP 0.1UF 50V X7R
C966	065T0805104 32	CHIP 0.1UF 50V X7R
C963	065T0805104 32	CHIP 0.1UF 50V X7R
C962	065T0805104 32	CHIP 0.1UF 50V X7R
C961	065T0805104 32	CHIP 0.1UF 50V X7R
C960	065T0805104 32	CHIP 0.1UF 50V X7R
C952	065T0805104 32	CHIP 0.1UF 50V X7R
C981	065T0805104 32	CHIP 0.1UF 50V X7R
C982	065T0805104 32	CHIP 0.1UF 50V X7R
C983	065T0805104 32	CHIP 0.1UF 50V X7R
C984	065T0805104 32	CHIP 0.1UF 50V X7R
C101	065T0805104 32	CHIP 0.1UF 50V X7R
C976	065T0805104 32	CHIP 0.1UF 50V X7R
C977	065T0805104 32	CHIP 0.1UF 50V X7R
C978	065T0805104 32	CHIP 0.1UF 50V X7R
C979	065T0805104 32	CHIP 0.1UF 50V X7R
C980	065T0805104 32	CHIP 0.1UF 50V X7R
C925	065T0805104 32	CHIP 0.1UF 50V X7R
C914	065T0805104 32	CHIP 0.1UF 50V X7R
C104	065T0805104 32	CHIP 0.1UF 50V X7R
C103	065T0805104 32	CHIP 0.1UF 50V X7R
C964	065T0805105 22	CHIP 1UF 25V X7R 0805
C967	065T0805105 22	CHIP 1UF 25V X7R 0805
C916	065T0805221 31	220PF 50V NPO
C953	065T0805224 22	CAIP CAP 0.22 uF 25V X7R
C988	065T0805225 12	CHIP 2.2UF 16V X7R 0805
C927	065T0805471 31	CHIP 470PF 50V NPO
C926	065T0805471 31	CHIP 470PF 50V NPO
C954	065T0805472 21 GP	CHIP 0.0047UF 25V NPO 0805
C917	065T0805474 22	CHIP 0.47UF 25V X7R
C923	065T0805820 31	82PF
C987	065T120610432W	CAP 1206 0.1UF K 50V X7R
D903	093T 6432S	IN4148W

D908	093T 6432S	IN4148W
D909	093T 6432S	IN4148W
D913	093T 6432S	IN4148W
D915	093T 6432S	IN4148W
D919	093T 6432S	IN4148W
D921	093T 6432S	IN4148W
D933	093T 6432S	IN4148W
D914	093T 6432S	IN4148W
ZD901	093T 39S 15 T	RLZ15B
ZD909	093T 39S 15 T	RLZ15B
ZD906	093T 39S 24 T	RLZ 5.6B LLDS
D925	093T 52S 4 T	DIODE PSM13PT CHENMKO
D101	093T5004 1	SR54 T0-214AA
R979	061T 60210352T	CFR 10KOHM +-5% 1/6W
R941	061T 60247152T	470OHM +-5% 1/6W
R976	061T 60247152T	470OHM +-5% 1/6W
C955	067T 2151007NT	10UF 50V NCC 5*11MM
C956	067T 2151007NT	10UF 50V NCC 5*11MM
C913	067T 2152207NT	KY50VB22M-TP5 5*11
C920	067T 2152207NT	KY50VB22M-TP5 5*11
C924	067T 2154707NT	47UF 50V NCC 5*11MM
C951	067T 2154707NT	47UF 50V NCC 5*11MM
J923	071T 55 19 T	FERRITE BEAD D9X3. 5X0.8
J924	071T 55 19 T	FERRITE BEAD D9X3. 5X0.8
F902	084T 55 2	FUSE
F901	084T 55 4	FUSE 382-5A 250V WICKMANN
ZD905	093T 3916652T	MTZJ T-72 15B
ZD903	093T 3917052T	MTZJT-72 27B
D923	093T 64 1152T	1N4148
J915	095T 90 23	JUMP WIRE
J913	095T 90 23	JUMP WIRE
J912	095T 90 23	JUMP WIRE
J911	095T 90 23	JUMP WIRE
J916	095T 90 23	JUMP WIRE
J906	095T 90 23	JUMP WIRE
R989	095T 90 23	JUMP WIRE
J939	095T 90 23	JUMP WIRE
J935	095T 90 23	JUMP WIRE
J934	095T 90 23	JUMP WIRE
J933	095T 90 23	JUMP WIRE
J932	095T 90 23	JUMP WIRE
J931	095T 90 23	JUMP WIRE
J930	095T 90 23	JUMP WIRE
J929	095T 90 23	JUMP WIRE
J928	095T 90 23	JUMP WIRE
J927	095T 90 23	JUMP WIRE
J926	095T 90 23	JUMP WIRE
J925	095T 90 23	JUMP WIRE
J922	095T 90 23	JUMP WIRE
J921	095T 90 23	JUMP WIRE
J920	095T 90 23	JUMP WIRE
J919	095T 90 23	JUMP WIRE
J918	095T 90 23	JUMP WIRE
J917	095T 90 23	JUMP WIRE
J910	095T 90 23	JUMP WIRE
J909	095T 90 23	JUMP WIRE
J908	095T 90 23	JUMP WIRE

J907	095T 90 23	JUMP WIRE
J905	095T 90 23	JUMP WIRE
	715T1624 C D2	POWER BOARD PCB
J904	095T 90 23	JUMP WIRE
C911	006T 31502	1.5MM RIVET
C910	006T 31502	1.5MM RIVET
IC922	056T 158 10 T	IC AZ431AZ-AE1 TO-92 AAC
C950	065T 1K102 5T6921	1000PF/1KV
C965	065T 1K102 5T6921	1000PF/1KV
C928	067T 2152207NT	KY50VB22M-TP5 5*11
L908	071T 55 19 T	FERRITE BEAD D9X3. 5X0.8
J901	095T 90 23	JUMP WIRE
T901	006T 31500	EYELET
T902	006T 31500	EYELET
L903	006T 31500	EYELET
L901	006T 31502	1.5MM RIVET
NR901	006T 31502	1.5MM RIVET
R912	006T 31502	1.5MM RIVET
R931	006T 31502	1.5MM RIVET
L902	006T 31502	1.5MM RIVET
IC921	056T 158 10 T	IC AZ431AZ-AE1 TO-92 AAC
SCR901	057T 566 4	MCR100-6SCR
C922	065T 1K222 2T6921	0.0022UF 1KV +-10%
RJ902	084T 55 2	FUSE
ZD904	093T 3918252T	DIODE MTZJ T-72 18B DO-34 ROHM
J914	095T 90 23	JUMP WIRE
J942	095T 90 23	JUMP WIRE
J943	095T 90 23	JUMP WIRE
	AUPFEA1P	AUDIO BOARD
CN1	033T3802 5	AUDIO IN
C18	067T305V221 6	105℃ EC 220UF M 35V
C13	067T305V221 6	105℃ EC 220UF M 35V
L8	073T 253158 L	CHOKE COIL
L10	073T 253158 L	CHOKE COIL
L2	073T 253158 L	CHOKE COIL
L4	073T 253158 L	CHOKE COIL
MTG U1	090T6068 2	HEAT SINK
CN3	095T8014 4520	WIRE HARNESS
CN2	095T8014 6532	WIRE HARNESS
C28	064T176J104 0T	0.1UF +-5% 50/63V
C24	064T176J104 0T	0.1UF +-5% 50/63V
C5	064T176J104 0T	0.1UF +-5% 50/63V
C1	064T176J104 0T	0.1UF +-5% 50/63V
C26	064T176J474 0T	0.47UF +-5% 50/63V
C3	064T176J474 0T	0.47UF +-5% 50/63V
U1	056T 616 25	TPA3100D2RGZR QFN-48
Q1	057T 417 4	CHIP PMBS3904 BY PHILIPS
R11	061T0603000	CHIP 0OHM 1/16W
R12	061T0603000	CHIP 0OHM 1/16W
R7	061T0603000	CHIP 0OHM 1/16W
R1	061T0603101	CHIP 100OHM 1/16W
R2	061T0603101	CHIP 100OHM 1/16W
R3	061T0603103	CHIP 10KOHM 1/16W
R4	061T0603103	CHIP 10KOHM 1/16W
R5	061T0603103	CHIP 10KOHM 1/16W
R10	061T0603104	CHIP 100K OHM 1/16W
R8	061T0603104	CHIP 100K OHM 1/16W

R9	061T0603104	CHIP 100K OHM 1/16W
R6	061T0603333	RST CHIPR 33 KOHM +-5% 1/10W
C2	065T0603102 32	CHIP 1000PF 50V X7R
C25	065T0603102 32	CHIP 1000PF 50V X7R
C27	065T0603102 32	CHIP 1000PF 50V X7R
C4	065T0603102 32	CHIP 1000PF 50V X7R
C22	065T0603103 32	CHIP 0.01UF 50V X7R
C10	065T0603105 12	CHIP 1UF 16V X7R
C11	065T0603105 12	CHIP 1UF 16V X7R
C12	065T0603105 12	CHIP 1UF 16V X7R
C14	065T0603105 12	CHIP 1UF 16V X7R
C15	065T0603105 12	CHIP 1UF 16V X7R
C16	065T0603105 12	CHIP 1UF 16V X7R
C17	065T0603105 12	CHIP 1UF 16V X7R
C19	065T0603105 12	CHIP 1UF 16V X7R
C23	065T0603105 12	CHIP 1UF 16V X7R
C9	065T0603105 12	CHIP 1UF 16V X7R
C20	065T0603223 32	CHIP 0.022UF 50V X7R 0603
C21	065T0603223 32	CHIP 0.022UF 50V X7R 0603
C6	065T0603223 32	CHIP 0.022UF 50V X7R 0603
C8	065T0603223 32	CHIP 0.022UF 50V X7R 0603
C7	067T 4121003XT	EC 85℃ CHIP 10UF M 16V
L11	071T 56U601	BEAD 600 OHM
L1	071T 56U601	BEAD 600 OHM
L12	071T 56U601	BEAD 600 OHM
L13	071T 56U601	BEAD 600 OHM
L3	071T 56U601	BEAD 600 OHM
L5	071T 56U601	BEAD 600 OHM
L6	071T 56U601	BEAD 600 OHM
L7	071T 56U601	BEAD 600 OHM
L9	071T 56U601	BEAD 600 OHM
D1	093T 64 42 P	BAV70 SOT23
D2	093T 39S 10 T	RLZ6.8B LLDS
	715T1797 1	AUDIO BOARD PCB
	CBPFEF5KGHDLJP	MAIN BOARD
PA04	033T3802 3	WAFER EH-3
PU03	033T3802 4	WAFER PH-4
PU02	033T3802 4	WAFER PH-4
PA06	033T3802 6	WAFER EH-06
PM46	033T3802 9	WAFER PH-9
PM47	033T3802 12	WAFER PH-12
PC01	033T8009 2A	2 PIN JAMPER
PB01	033T800910A	PIN HEADER DUAL ROW 10P
PH07	033T800914A	PIN HEADER DUAL ROW 14P180
PA01	033T8027 10	WAFER 10P 2.0MM DIP
PA03	033T8027 14	DUAL 7X2 CONNECTOR
PA05	033T8027 16	WAFER 16PIN 2.0mm DIP
PA02	033T8027 20	WAFER 2*10P 2.0MM
PG50	033T8043 20 H	PIN HEADRER 20P 2.0MM
	044T3231508512	CHIELD D-SUB
RC51	061T 60222952T	2.2 OHM +-5% 1/6W
RL04	061T 60222952T	2.2 OHM +-5% 1/6W
CLT7	064T176J474 0T	0.47UF +-5% 50/63V
CH04	067T 305101 7	105℃ 100UF +-20% 50V
CT25	067T305V221 3	220UF/16V
CC75	067T305V221 3	220UF/16V
JB04	088T 78 1321C	RCA JACK 1*1 W/R

JB05	088T 30214K	PHONE JACK
JB02	088T 358 39HC1	D-SUB 15P F+DVI 24P
	089T 173 56 44	RF EXTEND CABLE
UV00	090T 372 2	HEAT SINK
UJ00	090T 372 2	HEAT SINK
UT04	094TNTAT T 1P	TUNER TD1336O/FGHP PHILIP
UC52	053T 44 6	SAW FILTER
UT41	053T 44 7	SAW FILTER
UA03	056T 133 23 R	BA17809FP-E2
UM05	056T 133 30AAC	IC AZ1117H-ADJ-E1
UB12	056T 133 30AAC	IC AZ1117H-ADJ-E1
UU17	056T 133 30AAC	IC AZ1117H-ADJ-E1
UU01	056T 133 30AAC	IC AZ1117H-ADJ-E1
UT00	056T 133 30AAC	IC AZ1117H-ADJ-E1
UM06	056T 133 30AAC	IC AZ1117H-ADJ-E1
UB38	056T 133 30AAC	IC AZ1117H-ADJ-E1
UA05	056T 212 8	IC LM324PT TSSOP-14 ST
UJ00	056T 562124	IC PNX2017E/M1F03 BGA-596
UU27	056T 563 73	TS2431AILT SOT23-3L
UU11	056T 563 73	TS2431AILT SOT23-3L
UU00	056T 564 3	NCP5422ADR2G S0-16 ON
UL50	056T 615 51	HY5DU281622ETP-4 TSOPII-66
UV01	056T 61550A	IC HY5DU561622ETP-4 TSOPII-66
UV02	056T 61550A	IC HY5DU561622ETP-4 TSOPII-66
UA04	056T 616 26	TS482IST
UC02	056T 620 1	74VHC4053M SOIC-16P
UC01	056T 620 1	74VHC4053M SOIC-16P
UV00	056T 623 12	PNX8550EH/M1/S1 HBGA-564BY PHI
UB11	056T 623 13	TDA9975AEL/11/C1 LBGA256BY PHI
UP15	056T 632 2	74HC4066PW TSSOP-14BY PHILIPS
UQ01	056T 635 3	LM3526MX-LNOPB SOP-8NY NS
U7T41	056T 639 2	UPC3218GV-E1-A SSOP-8 NEC
ULB0	056T 643 18	NCP303LSN10TIG TSOP-5
ULB1	056T 643 18	NCP303LSN10TIG TSOP-5
ULB2	056T 643 18	NCP303LSN10TIG TSOP-5
ULB3	056T 643 18	NCP303LSN10TIG TSOP-5
ULB4	056T 643 18	NCP303LSN10TIG TSOP-5
UM03	056T 643 18	NCP303LSN10TIG TSOP-5
UT10	056T 652 4	PCA9515ADP TSSOP
UJ08	056T 663 1	CY2305SXC-1HT S01C-8
UTG0	056T 664 2	IC NXT2003 218N03ZZA05G/100-CK2073 TI
UC00	056T1126 15	PNX3000HL/N3
ULA7	056T1133 68DT0	M25P05-AVMN6TP S0-8 ST
UP80	056T1133 82	IC TC58DVM82TGI0 TSOP-48 TOSHIBA
UP14	056T1133 83DT1	IC M24C64-WDW6TP ST
UB02	056T113334A	IC 24LC02B/SNG SOIC-8 MICROCHIP
UB03	056T113334A	IC 24LC02B/SNG SOIC-8 MICROCHIP
UB01	056T4LVC 14 P	74LVC14ADT
UP81	056T4LVC245 1P	74LVC245APW TSSOP-20BY PHILIPS
UZ11	056T4LVC245 1P	74LVC245APW TSSOP-20BY PHILIPS
UZ12	056T4LVC245 1P	74LVC245APW TSSOP-20BY PHILIPS
U7P76	056T4LVC245 1P	74LVC245APW TSSOP-20BY PHILIPS
U7P77	056T4LVC245 1P	74LVC245APW TSSOP-20BY PHILIPS
QJ13	057T 417 4	CHIP PMBS3904 BY PHILIPS
QJ11	057T 417 4	CHIP PMBS3904 BY PHILIPS
QJ07	057T 417 4	CHIP PMBS3904 BY PHILIPS
QA08	057T 417 4	CHIP PMBS3904 BY PHILIPS

QA10	057T 417 4	CHIP PMBS3904 BY PHILIPS
QA13	057T 417 4	CHIP PMBS3904 BY PHILIPS
QA16	057T 417 4	CHIP PMBS3904 BY PHILIPS
QA17	057T 417 4	CHIP PMBS3904 BY PHILIPS
QC29	057T 417 4	CHIP PMBS3904 BY PHILIPS
QC30	057T 417 4	CHIP PMBS3904 BY PHILIPS
QC31	057T 417 4	CHIP PMBS3904 BY PHILIPS
QC32	057T 417 4	CHIP PMBS3904 BY PHILIPS
QC56	057T 417 4	CHIP PMBS3904 BY PHILIPS
QJ01	057T 417 4	CHIP PMBS3904 BY PHILIPS
QJ02	057T 417 4	CHIP PMBS3904 BY PHILIPS
QLB5	057T 417 4	CHIP PMBS3904 BY PHILIPS
QM10	057T 417 4	CHIP PMBS3904 BY PHILIPS
QM11	057T 417 4	CHIP PMBS3904 BY PHILIPS
QT10	057T 417 4	CHIP PMBS3904 BY PHILIPS
QT12	057T 417 4	CHIP PMBS3904 BY PHILIPS
QTG2	057T 417 4	CHIP PMBS3904 BY PHILIPS
QU05	057T 417 4	CHIP PMBS3904 BY PHILIPS
QU06	057T 417 4	CHIP PMBS3904 BY PHILIPS
QU07	057T 417 4	CHIP PMBS3904 BY PHILIPS
QU12	057T 417 4	CHIP PMBS3904 BY PHILIPS
QU15	057T 417 4	CHIP PMBS3904 BY PHILIPS
QU17	057T 417 4	CHIP PMBS3904 BY PHILIPS
QA14	057T 417 4	CHIP PMBS3904 BY PHILIPS
QB30	057T 417 4	CHIP PMBS3904 BY PHILIPS
QA04	057T 419 5 T	TRANS_500MA_45VBC817-25_SOT-23
QA05	057T 419 5 T	TRANS_500MA_45VBC817-25_SOT-23
QB05	057T 600 54	FET BSN20 SOT-23 PHILIPS
QB04	057T 600 54	FET BSN20 SOT-23 PHILIPS
QB01	057T 600 54	FET BSN20 SOT-23 PHILIPS
QB00	057T 600 54	FET BSN20 SOT-23 PHILIPS
QP17	057T 7602PH	PDTC114EK SC-59 PHILIPS
QP16	057T 7602PH	PDTC114EK SC-59 PHILIPS
QM01	057T 7602PH	PDTC114EK SC-59 PHILIPS
QJ06	057T 763 3	AO4411L SO-8 BY AOS SMT
QTG1	057T 763 16	SI2306DS-E3 SOT-23
QU03	057T 763 18	SI4944DY-T1
QU01	057T 763 18	SI4944DY-T1
QU28	057T 763 20	PHD38N02LT SOT-428
QA09	057T 766 1	2SA1037AK BY ROHM
QA11	057T 766 1	2SA1037AK BY ROHM
QA12	057T 766 1	2SA1037AK BY ROHM
QA15	057T 766 1	2SA1037AK BY ROHM
QC33	057T 766 1	2SA1037AK BY ROHM
QJ03	057T 766 1	2SA1037AK BY ROHM
QJ08	057T 766 1	2SA1037AK BY ROHM
QJ09	057T 766 1	2SA1037AK BY ROHM
QJ10	057T 766 1	2SA1037AK BY ROHM
QJ12	057T 766 1	2SA1037AK BY ROHM
QL01	057T 766 1	2SA1037AK BY ROHM
QL02	057T 766 1	2SA1037AK BY ROHM
QL03	057T 766 1	2SA1037AK BY ROHM
QM12	057T 766 1	2SA1037AK BY ROHM
QP18	057T 766 1	2SA1037AK BY ROHM
QT11	057T 766 1	2SA1037AK BY ROHM
QTG3	057T 766 1	2SA1037AK BY ROHM
QU101	057T 766 1	2SA1037AK BY ROHM

QU102	057T 766 1	2SA1037AK BY ROHM
QU13	057T 766 1	2SA1037AK BY ROHM
QA07	057T 766 1	2SA1037AK BY ROHM
QA06	057T 766 1	2SA1037AK BY ROHM
QU29	057T 766 1	2SA1037AK BY ROHM
QU30	057T 766 1	2SA1037AK BY ROHM
QH01	057T 766 1	2SA1037AK BY ROHM
RBA9	061T 47 1	VARISTOR EZJZ1V80010
RBA8	061T 47 1	VARISTOR EZJZ1V80010
RBA7	061T 47 1	VARISTOR EZJZ1V80010
RBA6	061T 47 1	VARISTOR EZJZ1V80010
RBA5	061T 47 1	VARISTOR EZJZ1V80010
RBA4	061T 47 1	VARISTOR EZJZ1V80010
RBA3	061T 47 1	VARISTOR EZJZ1V80010
RBA2	061T 47 1	VARISTOR EZJZ1V80010
RPQ02	061T 125101 8	RST CHIP AR 8P4R 100 OHM +-5% 1/16W
RPQ05	061T 125101 8	RST CHIP AR 8P4R 100 OHM +-5% 1/16W
RPQ07	061T 125101 8	RST CHIP AR 8P4R 100 OHM +-5% 1/16W
RPQ08	061T 125101 8	RST CHIP AR 8P4R 100 OHM +-5% 1/16W
RPQ25	061T 125101 8	RST CHIP AR 8P4R 100 OHM +-5% 1/16W
RPQ28	061T 125101 8	RST CHIP AR 8P4R 100 OHM +-5% 1/16W
RPQ34	061T 125101 8	RST CHIP AR 8P4R 100 OHM +-5% 1/16W
RPQ44	061T 125101 8	RST CHIP AR 8P4R 100 OHM +-5% 1/16W
RLR3	061T 125330 8	RST CHIP AR 8P4R 33 OHM +-5% 1/16W
RLR4	061T 125330 8	RST CHIP AR 8P4R 33 OHM +-5% 1/16W
RLR5	061T 125330 8	RST CHIP AR 8P4R 33 OHM +-5% 1/16W
RLR6	061T 125330 8	RST CHIP AR 8P4R 33 OHM +-5% 1/16W
RLR7	061T 125330 8	RST CHIP AR 8P4R 33 OHM +-5% 1/16W
RLR8	061T 125330 8	RST CHIP AR 8P4R 33 OHM +-5% 1/16W
RLR9	061T 125330 8	RST CHIP AR 8P4R 33 OHM +-5% 1/16W
RLS0	061T 125330 8	RST CHIP AR 8P4R 33 OHM +-5% 1/16W
RLS1	061T 125330 8	RST CHIP AR 8P4R 33 OHM +-5% 1/16W
RB57	061T 125330 8	RST CHIP AR 8P4R 33 OHM +-5% 1/16W
RB58	061T 125330 8	RST CHIP AR 8P4R 33 OHM +-5% 1/16W
RB56	061T 125330 8	RST CHIP AR 8P4R 33 OHM +-5% 1/16W
RB59	061T 125330 8	RST CHIP AR 8P4R 33 OHM +-5% 1/16W
RB62	061T 125330 8	RST CHIP AR 8P4R 33 OHM +-5% 1/16W
RH80	061T 125472 8	RST CHIP AR 8P4R 4.7KOHM +-5% 1/16W
RH81	061T 125472 8	RST CHIP AR 8P4R 4.7KOHM +-5% 1/16W
R9P17	061T0603000	CHIP 0OHM 1/16W
R9P41	061T0603000	CHIP 0OHM 1/16W
R9P79	061T0603000	CHIP 0OHM 1/16W
R9Q14	061T0603000	CHIP 0OHM 1/16W
R9Q16	061T0603000	CHIP 0OHM 1/16W
R9T04	061T0603000	CHIP 0OHM 1/16W
R9TG2	061T0603000	CHIP 0OHM 1/16W
R9TG3	061T0603000	CHIP 0OHM 1/16W
R9U01	061T0603000	CHIP 0OHM 1/16W
R9U02	061T0603000	CHIP 0OHM 1/16W
R9U04	061T0603000	CHIP 0OHM 1/16W
R9U05	061T0603000	CHIP 0OHM 1/16W
R9U13	061T0603000	CHIP 0OHM 1/16W
R9H32	061T0603000	CHIP 0OHM 1/16W
R9H33	061T0603000	CHIP 0OHM 1/16W
R9H34	061T0603000	CHIP 0OHM 1/16W
R9J24	061T0603000	CHIP 0OHM 1/16W
R9LA0	061T0603000	CHIP 0OHM 1/16W

R9LA1	061T0603000	CHIP 0OHM 1/16W
R9LA7	061T0603000	CHIP 0OHM 1/16W
R9LA8	061T0603000	CHIP 0OHM 1/16W
R9LA9	061T0603000	CHIP 0OHM 1/16W
R9M01	061T0603000	CHIP 0OHM 1/16W
R9M02	061T0603000	CHIP 0OHM 1/16W
R9M04	061T0603000	CHIP 0OHM 1/16W
R9M05	061T0603000	CHIP 0OHM 1/16W
RB91	061T0603000	CHIP 0OHM 1/16W
R9B12	061T0603000	CHIP 0OHM 1/16W
RU25	061T0603000	CHIP 0OHM 1/16W
RU28	061T0603000	CHIP 0OHM 1/16W
CB43	061T0603000	CHIP 0OHM 1/16W
RB77	061T0603000	CHIP 0OHM 1/16W
RB78	061T0603000	CHIP 0OHM 1/16W
RA07	061T0603000	CHIP 0OHM 1/16W
RA08	061T0603000	CHIP 0OHM 1/16W
RA09	061T0603000	CHIP 0OHM 1/16W
RA12	061T0603000	CHIP 0OHM 1/16W
RA11	061T0603000	CHIP 0OHM 1/16W
RA10	061T0603000	CHIP 0OHM 1/16W
R9U14	061T0603000	CHIP 0OHM 1/16W
R9U15	061T0603000	CHIP 0OHM 1/16W
R9U16	061T0603000	CHIP 0OHM 1/16W
RJ07	061T0603000	CHIP 0OHM 1/16W
RJ08	061T0603000	CHIP 0OHM 1/16W
RJ11	061T0603000	CHIP 0OHM 1/16W
RP68	061T0603000	CHIP 0OHM 1/16W
RP70	061T0603000	CHIP 0OHM 1/16W
RP72	061T0603000	CHIP 0OHM 1/16W
RP74	061T0603000	CHIP 0OHM 1/16W
RP76	061T0603000	CHIP 0OHM 1/16W
RP78	061T0603000	CHIP 0OHM 1/16W
RQ75	061T0603000	CHIP 0OHM 1/16W
R9H03	061T0603000	CHIP 0OHM 1/16W
R9H02	061T0603000	CHIP 0OHM 1/16W
R9H01	061T0603000	CHIP 0OHM 1/16W
R9G35	061T0603000	CHIP 0OHM 1/16W
R9G30	061T0603000	CHIP 0OHM 1/16W
R9C61	061T0603000	CHIP 0OHM 1/16W
R9C60	061T0603000	CHIP 0OHM 1/16W
R9C59	061T0603000	CHIP 0OHM 1/16W
R9C57	061T0603000	CHIP 0OHM 1/16W
R9C53	061T0603000	CHIP 0OHM 1/16W
R9C50	061T0603000	CHIP 0OHM 1/16W
R9C49	061T0603000	CHIP 0OHM 1/16W
R9B19	061T0603000	CHIP 0OHM 1/16W
R9B16	061T0603000	CHIP 0OHM 1/16W
R9B13	061T0603000	CHIP 0OHM 1/16W
R9B11	061T0603000	CHIP 0OHM 1/16W
R9H05	061T0603000	CHIP 0OHM 1/16W
R9H30	061T0603000	CHIP 0OHM 1/16W
R9H29	061T0603000	CHIP 0OHM 1/16W
R9H27	061T0603000	CHIP 0OHM 1/16W
R9H26	061T0603000	CHIP 0OHM 1/16W
R9H19	061T0603000	CHIP 0OHM 1/16W
R9H18	061T0603000	CHIP 0OHM 1/16W

R9H16	061T0603000	CHIP 0OHM 1/16W
R9H15	061T0603000	CHIP 0OHM 1/16W
R9H06	061T0603000	CHIP 0OHM 1/16W
R9H07	061T0603000	CHIP 0OHM 1/16W
R9H08	061T0603000	CHIP 0OHM 1/16W
R9H09	061T0603000	CHIP 0OHM 1/16W
R9H10	061T0603000	CHIP 0OHM 1/16W
R9H11	061T0603000	CHIP 0OHM 1/16W
R9H12	061T0603000	CHIP 0OHM 1/16W
R9H13	061T0603000	CHIP 0OHM 1/16W
RC31	061T0603100	CHIP 10OHM 1/16W
RL05	061T0603100	CHIP 10OHM 1/16W
RU20	061T0603100	CHIP 10OHM 1/16W
RU21	061T0603100	CHIP 10OHM 1/16W
RU22	061T0603100	CHIP 10OHM 1/16W
RU24	061T0603100	CHIP 10OHM 1/16W
RU27	061T0603100	CHIP 10OHM 1/16W
RU42	061T0603100	CHIP 10OHM 1/16W
RU54	061T0603100	CHIP 10OHM 1/16W
RA01	061T0603100	CHIP 10OHM 1/16W
RA02	061T0603100	CHIP 10OHM 1/16W
RA03	061T0603100	CHIP 10OHM 1/16W
RA04	061T0603100	CHIP 10OHM 1/16W
RA05	061T0603100	CHIP 10OHM 1/16W
RA06	061T0603100	CHIP 10OHM 1/16W
RU17	061T0603100 1F	RST CHIPR 1 KOHM +-1% 1/10W
RB37	061T0603100 1F	RST CHIPR 1 KOHM +-1% 1/10W
RB38	061T0603100 1F	RST CHIPR 1 KOHM +-1% 1/10W
RLM4	061T0603101	CHIP 100OHM 1/16W
RLM5	061T0603101	CHIP 100OHM 1/16W
RLM7	061T0603101	CHIP 100OHM 1/16W
RLN0	061T0603101	CHIP 100OHM 1/16W
RLN1	061T0603101	CHIP 100OHM 1/16W
RLN2	061T0603101	CHIP 100OHM 1/16W
RLN3	061T0603101	CHIP 100OHM 1/16W
RLN4	061T0603101	CHIP 100OHM 1/16W
RLN5	061T0603101	CHIP 100OHM 1/16W
RLN6	061T0603101	CHIP 100OHM 1/16W
RLN7	061T0603101	CHIP 100OHM 1/16W
RLQ6	061T0603101	CHIP 100OHM 1/16W
RP83	061T0603101	CHIP 100OHM 1/16W
RP84	061T0603101	CHIP 100OHM 1/16W
RP85	061T0603101	CHIP 100OHM 1/16W
RLM3	061T0603101	CHIP 100OHM 1/16W
RLK0	061T0603101	CHIP 100OHM 1/16W
RLK1	061T0603101	CHIP 100OHM 1/16W
RLK2	061T0603101	CHIP 100OHM 1/16W
RLK3	061T0603101	CHIP 100OHM 1/16W
RLK4	061T0603101	CHIP 100OHM 1/16W
RLK5	061T0603101	CHIP 100OHM 1/16W
RLK6	061T0603101	CHIP 100OHM 1/16W
RLK7	061T0603101	CHIP 100OHM 1/16W
RLK8	061T0603101	CHIP 100OHM 1/16W
RLL2	061T0603101	CHIP 100OHM 1/16W
RLL3	061T0603101	CHIP 100OHM 1/16W
RLL4	061T0603101	CHIP 100OHM 1/16W
RLL5	061T0603101	CHIP 100OHM 1/16W

RLL6	061T0603101	CHIP 100OHM 1/16W
RLL7	061T0603101	CHIP 100OHM 1/16W
RLM0	061T0603101	CHIP 100OHM 1/16W
RLM1	061T0603101	CHIP 100OHM 1/16W
RLM2	061T0603101	CHIP 100OHM 1/16W
RP86	061T0603101	CHIP 100OHM 1/16W
RTG8	061T0603101	CHIP 100OHM 1/16W
RTG9	061T0603101	CHIP 100OHM 1/16W
RU79	061T0603101	CHIP 100OHM 1/16W
RU81	061T0603101	CHIP 100OHM 1/16W
RU88	061T0603101	CHIP 100OHM 1/16W
RU98	061T0603101	CHIP 100OHM 1/16W
RU99	061T0603101	CHIP 100OHM 1/16W
RV44	061T0603101	CHIP 100OHM 1/16W
RW79	061T0603101	CHIP 100OHM 1/16W
RW80	061T0603101	CHIP 100OHM 1/16W
RZ53	061T0603101	CHIP 100OHM 1/16W
RZ54	061T0603101	CHIP 100OHM 1/16W
RB04	061T0603101	CHIP 100OHM 1/16W
RB11	061T0603101	CHIP 100OHM 1/16W
R3T26	061T0603101	CHIP 100OHM 1/16W
RQ65	061T0603101	CHIP 100OHM 1/16W
RB16	061T0603101	CHIP 100OHM 1/16W
RQ10	061T0603101	CHIP 100OHM 1/16W
RQ11	061T0603101	CHIP 100OHM 1/16W
RQ12	061T0603101	CHIP 100OHM 1/16W
RQ13	061T0603101	CHIP 100OHM 1/16W
RQ14	061T0603101	CHIP 100OHM 1/16W
RQ15	061T0603101	CHIP 100OHM 1/16W
RQ25	061T0603101	CHIP 100OHM 1/16W
RQ26	061T0603101	CHIP 100OHM 1/16W
RQ48	061T0603101	CHIP 100OHM 1/16W
RQ50	061T0603101	CHIP 100OHM 1/16W
RQ52	061T0603101	CHIP 100OHM 1/16W
RQ74	061T0603101	CHIP 100OHM 1/16W
RQ76	061T0603101	CHIP 100OHM 1/16W
RQ79	061T0603101	CHIP 100OHM 1/16W
RQ97	061T0603101	CHIP 100OHM 1/16W
RQ98	061T0603101	CHIP 100OHM 1/16W
RQ99	061T0603101	CHIP 100OHM 1/16W
RLJ9	061T0603101	CHIP 100OHM 1/16W
RC06	061T0603101	CHIP 100OHM 1/16W
RC39	061T0603101	CHIP 100OHM 1/16W
RC40	061T0603101	CHIP 100OHM 1/16W
RC73	061T0603101	CHIP 100OHM 1/16W
RH15	061T0603101	CHIP 100OHM 1/16W
RH25	061T0603101	CHIP 100OHM 1/16W
RH26	061T0603101	CHIP 100OHM 1/16W
RH72	061T0603101	CHIP 100OHM 1/16W
RH75	061T0603101	CHIP 100OHM 1/16W
RH98	061T0603101	CHIP 100OHM 1/16W
RH99	061T0603101	CHIP 100OHM 1/16W
RL51	061T0603101	CHIP 100OHM 1/16W
RB61	061T0603101	CHIP 100OHM 1/16W
RA14	061T0603101	CHIP 100OHM 1/16W
RAA3	061T0603101	CHIP 100OHM 1/16W
RAA4	061T0603101	CHIP 100OHM 1/16W

RB02	061T0603101	CHIP 100OHM 1/16W
RB03	061T0603101	CHIP 100OHM 1/16W
RB07	061T0603101	CHIP 100OHM 1/16W
RB08	061T0603101	CHIP 100OHM 1/16W
RB14	061T0603101	CHIP 100OHM 1/16W
RB15	061T0603101	CHIP 100OHM 1/16W
RB19	061T0603101	CHIP 100OHM 1/16W
RB20	061T0603101	CHIP 100OHM 1/16W
RB60	061T0603101	CHIP 100OHM 1/16W
RLH2	061T0603101	CHIP 100OHM 1/16W
RLH3	061T0603101	CHIP 100OHM 1/16W
RLH4	061T0603101	CHIP 100OHM 1/16W
RLH7	061T0603101	CHIP 100OHM 1/16W
RLH8	061T0603101	CHIP 100OHM 1/16W
RLH9	061T0603101	CHIP 100OHM 1/16W
RLJ0	061T0603101	CHIP 100OHM 1/16W
RLJ1	061T0603101	CHIP 100OHM 1/16W
RLJ5	061T0603101	CHIP 100OHM 1/16W
RLJ6	061T0603101	CHIP 100OHM 1/16W
RLJ7	061T0603101	CHIP 100OHM 1/16W
RLJ8	061T0603101	CHIP 100OHM 1/16W
RLH1	061T0603101	CHIP 100OHM 1/16W
RLE1	061T0603101	CHIP 100OHM 1/16W
RLE2	061T0603101	CHIP 100OHM 1/16W
RLF0	061T0603101	CHIP 100OHM 1/16W
RLF1	061T0603101	CHIP 100OHM 1/16W
RLF2	061T0603101	CHIP 100OHM 1/16W
RLF8	061T0603101	CHIP 100OHM 1/16W
RLG3	061T0603101	CHIP 100OHM 1/16W
RLG6	061T0603101	CHIP 100OHM 1/16W
RLG7	061T0603101	CHIP 100OHM 1/16W
RLG8	061T0603101	CHIP 100OHM 1/16W
RLG9	061T0603101	CHIP 100OHM 1/16W
RLH0	061T0603101	CHIP 100OHM 1/16W
RK14	061T0603102	CHIP 1K OHM 1/16W
RL38	061T0603102	CHIP 1K OHM 1/16W
RL39	061T0603102	CHIP 1K OHM 1/16W
RL90	061T0603102	CHIP 1K OHM 1/16W
RM05	061T0603102	CHIP 1K OHM 1/16W
RT02	061T0603102	CHIP 1K OHM 1/16W
RT06	061T0603102	CHIP 1K OHM 1/16W
RT14	061T0603102	CHIP 1K OHM 1/16W
RTG5	061T0603102	CHIP 1K OHM 1/16W
RK13	061T0603102	CHIP 1K OHM 1/16W
RJ75	061T0603102	CHIP 1K OHM 1/16W
RJ66	061T0603102	CHIP 1K OHM 1/16W
RH51	061T0603102	CHIP 1K OHM 1/16W
RH50	061T0603102	CHIP 1K OHM 1/16W
RH19	061T0603102	CHIP 1K OHM 1/16W
RG32	061T0603102	CHIP 1K OHM 1/16W
RC35	061T0603102	CHIP 1K OHM 1/16W
RB70	061T0603102	CHIP 1K OHM 1/16W
RB09	061T0603102	CHIP 1K OHM 1/16W
RV27	061T0603102	CHIP 1K OHM 1/16W
RV26	061T0603102	CHIP 1K OHM 1/16W
RV25	061T0603102	CHIP 1K OHM 1/16W
RV24	061T0603102	CHIP 1K OHM 1/16W

RZ06	061T0603102	CHIP 1K OHM 1/16W
RZ03	061T0603102	CHIP 1K OHM 1/16W
RZ01	061T0603102	CHIP 1K OHM 1/16W
RV78	061T0603102	CHIP 1K OHM 1/16W
RUA7	061T0603102	CHIP 1K OHM 1/16W
RU56	061T0603102	CHIP 1K OHM 1/16W
RU29	061T0603102	CHIP 1K OHM 1/16W
RU15	061T0603102	CHIP 1K OHM 1/16W
RU12	061T0603102	CHIP 1K OHM 1/16W
RTJ7	061T0603102	CHIP 1K OHM 1/16W
RTJ6	061T0603102	CHIP 1K OHM 1/16W
RTH4	061T0603102	CHIP 1K OHM 1/16W
RTH0	061T0603102	CHIP 1K OHM 1/16W
R3P76	061T0603102	CHIP 1K OHM 1/16W
R3P77	061T0603102	CHIP 1K OHM 1/16W
R703	061T0603102	CHIP 1K OHM 1/16W
RA39	061T0603102	CHIP 1K OHM 1/16W
RA40	061T0603102	CHIP 1K OHM 1/16W
RA62	061T0603102	CHIP 1K OHM 1/16W
RA69	061T0603102	CHIP 1K OHM 1/16W
RA78	061T0603102	CHIP 1K OHM 1/16W
RA85	061T0603102	CHIP 1K OHM 1/16W
RB69	061T0603102	CHIP 1K OHM 1/16W
RB68	061T0603102	CHIP 1K OHM 1/16W
RB67	061T0603102	CHIP 1K OHM 1/16W
RB66	061T0603102	CHIP 1K OHM 1/16W
RB65	061T0603102	CHIP 1K OHM 1/16W
RB40	061T0603102	CHIP 1K OHM 1/16W
RA89	061T0603102	CHIP 1K OHM 1/16W
RA88	061T0603102	CHIP 1K OHM 1/16W
RLH6	061T0603103	CHIP 10KOHM 1/16W
RLH5	061T0603103	CHIP 10KOHM 1/16W
RLG2	061T0603103	CHIP 10KOHM 1/16W
RLF9	061T0603103	CHIP 10KOHM 1/16W
RLE9	061T0603103	CHIP 10KOHM 1/16W
RLE8	061T0603103	CHIP 10KOHM 1/16W
RLE7	061T0603103	CHIP 10KOHM 1/16W
RLE0	061T0603103	CHIP 10KOHM 1/16W
RLJ2	061T0603103	CHIP 10KOHM 1/16W
RLJ3	061T0603103	CHIP 10KOHM 1/16W
RLR2	061T0603103	CHIP 10KOHM 1/16W
RLT8	061T0603103	CHIP 10KOHM 1/16W
RLU3	061T0603103	CHIP 10KOHM 1/16W
RLU4	061T0603103	CHIP 10KOHM 1/16W
RLV3	061T0603103	CHIP 10KOHM 1/16W
RLV4	061T0603103	CHIP 10KOHM 1/16W
RLB7	061T0603103	CHIP 10KOHM 1/16W
RLB8	061T0603103	CHIP 10KOHM 1/16W
RLB9	061T0603103	CHIP 10KOHM 1/16W
RLC0	061T0603103	CHIP 10KOHM 1/16W
RLC3	061T0603103	CHIP 10KOHM 1/16W
RLC4	061T0603103	CHIP 10KOHM 1/16W
RLD0	061T0603103	CHIP 10KOHM 1/16W
RLD1	061T0603103	CHIP 10KOHM 1/16W
RLD2	061T0603103	CHIP 10KOHM 1/16W
RLD3	061T0603103	CHIP 10KOHM 1/16W
RLD4	061T0603103	CHIP 10KOHM 1/16W

RLD5	061T0603103	CHIP 10KOHM 1/16W
RLD6	061T0603103	CHIP 10KOHM 1/16W
RLD7	061T0603103	CHIP 10KOHM 1/16W
RLD8	061T0603103	CHIP 10KOHM 1/16W
RLD9	061T0603103	CHIP 10KOHM 1/16W
RM00	061T0603103	CHIP 10KOHM 1/16W
RU85	061T0603103	CHIP 10KOHM 1/16W
RU86	061T0603103	CHIP 10KOHM 1/16W
RU87	061T0603103	CHIP 10KOHM 1/16W
RU89	061T0603103	CHIP 10KOHM 1/16W
RU90	061T0603103	CHIP 10KOHM 1/16W
RU91	061T0603103	CHIP 10KOHM 1/16W
RU92	061T0603103	CHIP 10KOHM 1/16W
RU93	061T0603103	CHIP 10KOHM 1/16W
RL32	061T0603103	CHIP 10KOHM 1/16W
RA15	061T0603103	CHIP 10KOHM 1/16W
RH35	061T0603103	CHIP 10KOHM 1/16W
RA24	061T0603103	CHIP 10KOHM 1/16W
RA26	061T0603103	CHIP 10KOHM 1/16W
RLB0	061T0603103	CHIP 10KOHM 1/16W
RLB1	061T0603103	CHIP 10KOHM 1/16W
RB31	061T0603103	CHIP 10KOHM 1/16W
RM01	061T0603103	CHIP 10KOHM 1/16W
RM02	061T0603103	CHIP 10KOHM 1/16W
RM09	061T0603103	CHIP 10KOHM 1/16W
RM72	061T0603103	CHIP 10KOHM 1/16W
RP36	061T0603103	CHIP 10KOHM 1/16W
RP38	061T0603103	CHIP 10KOHM 1/16W
RP57	061T0603103	CHIP 10KOHM 1/16W
RP80	061T0603103	CHIP 10KOHM 1/16W
RP82	061T0603103	CHIP 10KOHM 1/16W
RP88	061T0603103	CHIP 10KOHM 1/16W
RQ24	061T0603103	CHIP 10KOHM 1/16W
RU03	061T0603103	CHIP 10KOHM 1/16W
RU32	061T0603103	CHIP 10KOHM 1/16W
RU33	061T0603103	CHIP 10KOHM 1/16W
RU55	061T0603103	CHIP 10KOHM 1/16W
RU80	061T0603103	CHIP 10KOHM 1/16W
RJ28	061T0603103	CHIP 10KOHM 1/16W
RC41	061T0603103	CHIP 10KOHM 1/16W
RC38	061T0603103	CHIP 10KOHM 1/16W
RC07	061T0603103	CHIP 10KOHM 1/16W
RB45	061T0603103	CHIP 10KOHM 1/16W
RB43	061T0603103	CHIP 10KOHM 1/16W
RB13	061T0603103	CHIP 10KOHM 1/16W
RB12	061T0603103	CHIP 10KOHM 1/16W
RB01	061T0603103	CHIP 10KOHM 1/16W
RB00	061T0603103	CHIP 10KOHM 1/16W
RA91	061T0603103	CHIP 10KOHM 1/16W
RA87	061T0603103	CHIP 10KOHM 1/16W
RA84	061T0603103	CHIP 10KOHM 1/16W
RA82	061T0603103	CHIP 10KOHM 1/16W
RA81	061T0603103	CHIP 10KOHM 1/16W
RA77	061T0603103	CHIP 10KOHM 1/16W
RA75	061T0603103	CHIP 10KOHM 1/16W
RA74	061T0603103	CHIP 10KOHM 1/16W
RA64	061T0603103	CHIP 10KOHM 1/16W

RA63	061T0603103	CHIP 10KOHM 1/16W
RA54	061T0603103	CHIP 10KOHM 1/16W
RA53	061T0603103	CHIP 10KOHM 1/16W
R3P78	061T0603103	CHIP 10KOHM 1/16W
RLB5	061T0603103	CHIP 10KOHM 1/16W
RLB4	061T0603103	CHIP 10KOHM 1/16W
RLA9	061T0603103	CHIP 10KOHM 1/16W
RLA7	061T0603103	CHIP 10KOHM 1/16W
RLA5	061T0603103	CHIP 10KOHM 1/16W
RLA4	061T0603103	CHIP 10KOHM 1/16W
RLA3	061T0603103	CHIP 10KOHM 1/16W
RLA2	061T0603103	CHIP 10KOHM 1/16W
RLA1	061T0603103	CHIP 10KOHM 1/16W
RLA0	061T0603103	CHIP 10KOHM 1/16W
RL37	061T0603103	CHIP 10KOHM 1/16W
RL36	061T0603103	CHIP 10KOHM 1/16W
RJ62	061T0603103	CHIP 10KOHM 1/16W
RJ63	061T0603103	CHIP 10KOHM 1/16W
RJ67	061T0603103	CHIP 10KOHM 1/16W
RJ71	061T0603103	CHIP 10KOHM 1/16W
RJ72	061T0603103	CHIP 10KOHM 1/16W
RJ76	061T0603103	CHIP 10KOHM 1/16W
RJ94	061T0603103	CHIP 10KOHM 1/16W
RK15	061T0603103	CHIP 10KOHM 1/16W
RK17	061T0603103	CHIP 10KOHM 1/16W
RL02	061T0603103	CHIP 10KOHM 1/16W
RL35	061T0603103	CHIP 10KOHM 1/16W
RP37	061T0603104	CHIP 100K OHM 1/16W
RLU0	061T0603104	CHIP 100K OHM 1/16W
RLT7	061T0603104	CHIP 100K OHM 1/16W
RLC5	061T0603104	CHIP 100K OHM 1/16W
RL01	061T0603104	CHIP 100K OHM 1/16W
RL00	061T0603104	CHIP 100K OHM 1/16W
RK04	061T0603104	CHIP 100K OHM 1/16W
RK03	061T0603104	CHIP 100K OHM 1/16W
RJ77	061T0603104	CHIP 100K OHM 1/16W
RJ69	061T0603104	CHIP 100K OHM 1/16W
RJ68	061T0603104	CHIP 100K OHM 1/16W
RJ60	061T0603104	CHIP 100K OHM 1/16W
RT13	061T0603104	CHIP 100K OHM 1/16W
RB89	061T0603104	CHIP 100K OHM 1/16W
RK12	061T0603104	CHIP 100K OHM 1/16W
RK11	061T0603104	CHIP 100K OHM 1/16W
RK10	061T0603104	CHIP 100K OHM 1/16W
RK09	061T0603104	CHIP 100K OHM 1/16W
RK08	061T0603104	CHIP 100K OHM 1/16W
RK07	061T0603104	CHIP 100K OHM 1/16W
RK06	061T0603104	CHIP 100K OHM 1/16W
RK05	061T0603104	CHIP 100K OHM 1/16W
RUA2	061T0603104	CHIP 100K OHM 1/16W
RT18	061T0603104	CHIP 100K OHM 1/16W
RT16	061T0603104	CHIP 100K OHM 1/16W
RA66	061T0603104	CHIP 100K OHM 1/16W
RA55	061T0603104	CHIP 100K OHM 1/16W
RA52	061T0603104	CHIP 100K OHM 1/16W
RA35	061T0603104	CHIP 100K OHM 1/16W
RA34	061T0603104	CHIP 100K OHM 1/16W

RA32	061T0603104	CHIP 100K OHM 1/16W
RA31	061T0603104	CHIP 100K OHM 1/16W
RH82	061T0603105	CHIP 1MOHM 1/16W
RLB6	061T0603105	CHIP 1MOHM 1/16W
RU45	061T0603105	CHIP 1MOHM 1/16W
RU46	061T0603120 2F	RST CHIPR 12 KOHM +-1% 1/10W
RJ01	061T0603121	RST CHIPR 120 OHM +-5% 1/10W
RJ12	061T0603121	RST CHIPR 120 OHM +-5% 1/10W
RJ13	061T0603121	RST CHIPR 120 OHM +-5% 1/10W
RJA2	061T0603121	RST CHIPR 120 OHM +-5% 1/10W
RC32	061T0603122	RST CHIPR 1.2 KOHM +-5% 1/10W
RC34	061T0603122	RST CHIPR 1.2 KOHM +-5% 1/10W
RM71	061T0603122	RST CHIPR 1.2 KOHM +-5% 1/10W
RC44	061T0603122	RST CHIPR 1.2 KOHM +-5% 1/10W
RB36	061T0603123	RST CHIPR 12 KOHM +-5% 1/10W
RA57	061T0603151	RST CHIPR 150 OHM +-5% 1/10W
RA71	061T0603151	RST CHIPR 150 OHM +-5% 1/10W
RT04	061T0603152	CHIP 1.5KOHM 1/16W
RA20	061T0603153	RST CHIPR 15 KOHM +-5% 1/10W
RA22	061T0603153	RST CHIPR 15 KOHM +-5% 1/10W
RG35	061T0603153	RST CHIPR 15 KOHM +-5% 1/10W
RQ16	061T0603153	RST CHIPR 15 KOHM +-5% 1/10W
RQ17	061T0603153	RST CHIPR 15 KOHM +-5% 1/10W
RQ18	061T0603153	RST CHIPR 15 KOHM +-5% 1/10W
RQ23	061T0603153	RST CHIPR 15 KOHM +-5% 1/10W
RA86	061T0603180	RST CHIPR 18 OHM +-5% 1/10W
RC74	061T0603181	RST CHIPR 180 OHM +-5% 1/10W
RC75	061T0603181	RST CHIPR 180 OHM +-5% 1/10W
R3P73	061T0603181	RST CHIPR 180 OHM +-5% 1/10W
CLB4	061T0603182	CHIP 1.8K OHM 1/16W
RH05	061T0603182	CHIP 1.8K OHM 1/16W
RH04	061T0603182	CHIP 1.8K OHM 1/16W
RC43	061T0603182	CHIP 1.8K OHM 1/16W
RM04	061T0603183	RST CHIPR 18 KOHM +-5% 1/10W
RA90	061T0603183	RST CHIPR 18 KOHM +-5% 1/10W
RA80	061T0603183	RST CHIPR 18 KOHM +-5% 1/10W
RLU7	061T0603184	RST CHIPR 180 KOHM +-5% 1/10W
RLT5	061T0603184	RST CHIPR 180 KOHM +-5% 1/10W
RV17	061T0603220	CHIP 22OHM 1/16W
RV16	061T0603220	CHIP 22OHM 1/16W
RV15	061T0603220	CHIP 22OHM 1/16W
RV14	061T0603220	CHIP 22OHM 1/16W
RV13	061T0603220	CHIP 22OHM 1/16W
RV12	061T0603220	CHIP 22OHM 1/16W
RV11	061T0603220	CHIP 22OHM 1/16W
RV10	061T0603220	CHIP 22OHM 1/16W
RV09	061T0603220	CHIP 22OHM 1/16W
RV08	061T0603220	CHIP 22OHM 1/16W
RV07	061T0603220	CHIP 22OHM 1/16W
RV06	061T0603220	CHIP 22OHM 1/16W
RV05	061T0603220	CHIP 22OHM 1/16W
RV04	061T0603220	CHIP 22OHM 1/16W
RV03	061T0603220	CHIP 22OHM 1/16W
RV02	061T0603220	CHIP 22OHM 1/16W
RV01	061T0603220	CHIP 22OHM 1/16W
RV00	061T0603220	CHIP 22OHM 1/16W
RQ21	061T0603220	CHIP 22OHM 1/16W

RQ20	061T0603220	CHIP 22OHM 1/16W
RL99	061T0603220	CHIP 22OHM 1/16W
RV18	061T0603220	CHIP 22OHM 1/16W
RV40	061T0603220	CHIP 22OHM 1/16W
RV41	061T0603220	CHIP 22OHM 1/16W
RV42	061T0603220	CHIP 22OHM 1/16W
RV43	061T0603220	CHIP 22OHM 1/16W
RZ02	061T0603220	CHIP 22OHM 1/16W
RZ04	061T0603220	CHIP 22OHM 1/16W
RZ05	061T0603220	CHIP 22OHM 1/16W
RB90	061T0603220	CHIP 22OHM 1/16W
RV39	061T0603220	CHIP 22OHM 1/16W
RV38	061T0603220	CHIP 22OHM 1/16W
RV37	061T0603220	CHIP 22OHM 1/16W
RV36	061T0603220	CHIP 22OHM 1/16W
RV35	061T0603220	CHIP 22OHM 1/16W
RV34	061T0603220	CHIP 22OHM 1/16W
RV33	061T0603220	CHIP 22OHM 1/16W
RV32	061T0603220	CHIP 22OHM 1/16W
RV23	061T0603220	CHIP 22OHM 1/16W
RV22	061T0603220	CHIP 22OHM 1/16W
RV21	061T0603220	CHIP 22OHM 1/16W
RV20	061T0603220	CHIP 22OHM 1/16W
RV19	061T0603220	CHIP 22OHM 1/16W
RL89	061T0603220	CHIP 22OHM 1/16W
RL59	061T0603220	CHIP 22OHM 1/16W
RL58	061T0603220	CHIP 22OHM 1/16W
RL57	061T0603220	CHIP 22OHM 1/16W
RL56	061T0603220	CHIP 22OHM 1/16W
RL52	061T0603220	CHIP 22OHM 1/16W
RL50	061T0603220	CHIP 22OHM 1/16W
RJ06	061T0603220	CHIP 22OHM 1/16W
RH79	061T0603220	CHIP 22OHM 1/16W
RH73	061T0603220	CHIP 22OHM 1/16W
RH12	061T0603220	CHIP 22OHM 1/16W
RH07	061T0603220	CHIP 22OHM 1/16W
RH06	061T0603220	CHIP 22OHM 1/16W
RL71	061T0603220	CHIP 22OHM 1/16W
RL70	061T0603220	CHIP 22OHM 1/16W
RL69	061T0603220	CHIP 22OHM 1/16W
RL68	061T0603220	CHIP 22OHM 1/16W
RL67	061T0603220	CHIP 22OHM 1/16W
RL66	061T0603220	CHIP 22OHM 1/16W
RL65	061T0603220	CHIP 22OHM 1/16W
RL64	061T0603220	CHIP 22OHM 1/16W
RL63	061T0603220	CHIP 22OHM 1/16W
RL62	061T0603220	CHIP 22OHM 1/16W
RL61	061T0603220	CHIP 22OHM 1/16W
RL60	061T0603220	CHIP 22OHM 1/16W
RB49	061T0603220 0F	RST CHIPR 220 OHM +-1% 1/10W
RK02	061T0603221	CHIP 220OHM 1/16W
RK01	061T0603221	CHIP 220OHM 1/16W
RJ74	061T0603221	CHIP 220OHM 1/16W
RJ65	061T0603221	CHIP 220OHM 1/16W
RAA2	061T0603221	CHIP 220OHM 1/16W
RAA1	061T0603221	CHIP 220OHM 1/16W
RA73	061T0603221	CHIP 220OHM 1/16W

RA56	061T0603221	CHIP 220OHM 1/16W
RL34	061T0603221	CHIP 220OHM 1/16W
RLL9	061T0603221	CHIP 220OHM 1/16W
RTG2	061T0603221	CHIP 220OHM 1/16W
RTG3	061T0603221	CHIP 220OHM 1/16W
RU02	061T0603221	CHIP 220OHM 1/16W
RU05	061T0603221	CHIP 220OHM 1/16W
RU11	061T0603221	CHIP 220OHM 1/16W
RU18	061T0603221	CHIP 220OHM 1/16W
RW04	061T0603221	CHIP 220OHM 1/16W
RW05	061T0603221	CHIP 220OHM 1/16W
RM70	061T0603222	CHIP 2.2K OHM 1/16W
RP81	061T0603222	CHIP 2.2K OHM 1/16W
RU30	061T0603222	CHIP 2.2K OHM 1/16W
RU95	061T0603222	CHIP 2.2K OHM 1/16W
RUA1	061T0603222	CHIP 2.2K OHM 1/16W
RUA3	061T0603222	CHIP 2.2K OHM 1/16W
RLU2	061T0603223	CHIP 22KOHM 1/16W
RLU5	061T0603223	CHIP 22KOHM 1/16W
RLV2	061T0603223	CHIP 22KOHM 1/16W
RLV5	061T0603223	CHIP 22KOHM 1/16W
RU04	061T0603223	CHIP 22KOHM 1/16W
RU19	061T0603223	CHIP 22KOHM 1/16W
RH34	061T0603224	RST CHIPR 220 KOHM +-5% 1/10W
RA92	061T0603224	RST CHIPR 220 KOHM +-5% 1/10W
RA76	061T0603224	RST CHIPR 220 KOHM +-5% 1/10W
RA72	061T0603224	RST CHIPR 220 KOHM +-5% 1/10W
RA65	061T0603224	RST CHIPR 220 KOHM +-5% 1/10W
RA58	061T0603224	RST CHIPR 220 KOHM +-5% 1/10W
RA38	061T0603224	RST CHIPR 220 KOHM +-5% 1/10W
RA37	061T0603224	RST CHIPR 220 KOHM +-5% 1/10W
R3P79	061T0603271	RST CHIPR 270 OHM +-5% 1/10W
RU59	061T0603273	RST CHIPR 27 KOHM +-5% 1/10W
RA23	061T0603273	RST CHIPR 27 KOHM +-5% 1/10W
RA21	061T0603273	RST CHIPR 27 KOHM +-5% 1/10W
RA33	061T0603274	RST CHIPR 270 KOHM +-5% 1/10W
RA36	061T0603274	RST CHIPR 270 KOHM +-5% 1/10W
RA60	061T0603330	CHIP 33OHM 1/16W
RA61	061T0603330	CHIP 33OHM 1/16W
RA67	061T0603330	CHIP 33OHM 1/16W
RA68	061T0603330	CHIP 33OHM 1/16W
RB27	061T0603330	CHIP 33OHM 1/16W
RB29	061T0603330	CHIP 33OHM 1/16W
RC46	061T0603330	CHIP 33OHM 1/16W
RL40	061T0603330	CHIP 33OHM 1/16W
RL41	061T0603330	CHIP 33OHM 1/16W
RL42	061T0603330	CHIP 33OHM 1/16W
RL43	061T0603330	CHIP 33OHM 1/16W
RL44	061T0603330	CHIP 33OHM 1/16W
RL45	061T0603330	CHIP 33OHM 1/16W
RL46	061T0603330	CHIP 33OHM 1/16W
RL47	061T0603330	CHIP 33OHM 1/16W
RL48	061T0603330	CHIP 33OHM 1/16W
RLR1	061T0603330	CHIP 33OHM 1/16W
RL91	061T0603330	CHIP 33OHM 1/16W
RL49	061T0603330	CHIP 33OHM 1/16W
RB28	061T0603330	CHIP 33OHM 1/16W

RL92	061T0603330	CHIP 33OHM 1/16W
RL93	061T0603330	CHIP 33OHM 1/16W
RL94	061T0603330	CHIP 33OHM 1/16W
RL95	061T0603330	CHIP 33OHM 1/16W
RL96	061T0603330	CHIP 33OHM 1/16W
RB41	061T0603330	CHIP 33OHM 1/16W
RL97	061T0603330	CHIP 33OHM 1/16W
RL98	061T0603330	CHIP 33OHM 1/16W
RLR0	061T0603330	CHIP 33OHM 1/16W
RU41	061T0603330 2F	RST CHIPR 33 KOHM +-1% 1/10W
RLL8	061T0603331	RST CHIPR 330 OHM +-5% 1/10W
RH95	061T0603331	RST CHIPR 330 OHM +-5% 1/10W
RC55	061T0603331	RST CHIPR 330 OHM +-5% 1/10W
RC42	061T0603331	RST CHIPR 330 OHM +-5% 1/10W
RC37	061T0603331	RST CHIPR 330 OHM +-5% 1/10W
RU94	061T0603332	RST CHIPR 3.3 KOHM +-5% 1/10W
RU10	061T0603332	RST CHIPR 3.3 KOHM +-5% 1/10W
RU08	061T0603332	RST CHIPR 3.3 KOHM +-5% 1/10W
RU01	061T0603333	RST CHIPR 33 KOHM +-5% 1/10W
RU00	061T0603333	RST CHIPR 33 KOHM +-5% 1/10W
RTH5	061T0603333	RST CHIPR 33 KOHM +-5% 1/10W
RTH3	061T0603333	RST CHIPR 33 KOHM +-5% 1/10W
RM03	061T0603333	RST CHIPR 33 KOHM +-5% 1/10W
RLV0	061T0603334	RST CHIPR 330 KOHM +-5% 1/10W
RB51	061T0603361	RST CHIPR 360 OHM +-5% 1/10W
RB30	061T0603390	RST CHIPR 39 OHM +-5% 1/10W
RB32	061T0603390	RST CHIPR 39 OHM +-5% 1/10W
RB34	061T0603390	RST CHIPR 39 OHM +-5% 1/10W
RH20	061T0603390	RST CHIPR 39 OHM +-5% 1/10W
RH21	061T0603390	RST CHIPR 39 OHM +-5% 1/10W
RQ06	061T0603390	RST CHIPR 39 OHM +-5% 1/10W
RC53	061T0603391	RST CHIPR 390 OHM +-5% 1/10W
RU06	061T0603393	RST CHIPR 39 KOHM +-5% 1/10W
RQ39	061T0603470	RST CHIPR 47 OHM +-5% 1/10W
RQ37	061T0603470	RST CHIPR 47 OHM +-5% 1/10W
RQ35	061T0603470	RST CHIPR 47 OHM +-5% 1/10W
RQ33	061T0603470	RST CHIPR 47 OHM +-5% 1/10W
RQ00	061T0603470	RST CHIPR 47 OHM +-5% 1/10W
RL33	061T0603470	RST CHIPR 47 OHM +-5% 1/10W
RL31	061T0603470	RST CHIPR 47 OHM +-5% 1/10W
RL29	061T0603470	RST CHIPR 47 OHM +-5% 1/10W
RL27	061T0603470	RST CHIPR 47 OHM +-5% 1/10W
RL25	061T0603470	RST CHIPR 47 OHM +-5% 1/10W
RL23	061T0603470	RST CHIPR 47 OHM +-5% 1/10W
RQ57	061T0603470	RST CHIPR 47 OHM +-5% 1/10W
RQ55	061T0603470	RST CHIPR 47 OHM +-5% 1/10W
RQ53	061T0603470	RST CHIPR 47 OHM +-5% 1/10W
RQ51	061T0603470	RST CHIPR 47 OHM +-5% 1/10W
RQ49	061T0603470	RST CHIPR 47 OHM +-5% 1/10W
RQ47	061T0603470	RST CHIPR 47 OHM +-5% 1/10W
RQ45	061T0603470	RST CHIPR 47 OHM +-5% 1/10W
RQ43	061T0603470	RST CHIPR 47 OHM +-5% 1/10W
RQ41	061T0603470	RST CHIPR 47 OHM +-5% 1/10W
RQ63	061T0603470	RST CHIPR 47 OHM +-5% 1/10W
RQ66	061T0603470	RST CHIPR 47 OHM +-5% 1/10W
RQ67	061T0603470	RST CHIPR 47 OHM +-5% 1/10W
RQ68	061T0603470	RST CHIPR 47 OHM +-5% 1/10W

RUA5	061T0603470	RST CHIPR 47 OHM +-5% 1/10W
RL08	061T0603470	RST CHIPR 47 OHM +-5% 1/10W
RH02	061T0603470	RST CHIPR 47 OHM +-5% 1/10W
RL09	061T0603470	RST CHIPR 47 OHM +-5% 1/10W
RQ61	061T0603470	RST CHIPR 47 OHM +-5% 1/10W
RQ59	061T0603470	RST CHIPR 47 OHM +-5% 1/10W
RL10	061T0603470	RST CHIPR 47 OHM +-5% 1/10W
RL11	061T0603470	RST CHIPR 47 OHM +-5% 1/10W
RL12	061T0603470	RST CHIPR 47 OHM +-5% 1/10W
RL13	061T0603470	RST CHIPR 47 OHM +-5% 1/10W
RL14	061T0603470	RST CHIPR 47 OHM +-5% 1/10W
RL15	061T0603470	RST CHIPR 47 OHM +-5% 1/10W
RL16	061T0603470	RST CHIPR 47 OHM +-5% 1/10W
RL17	061T0603470	RST CHIPR 47 OHM +-5% 1/10W
RL18	061T0603470	RST CHIPR 47 OHM +-5% 1/10W
RL19	061T0603470	RST CHIPR 47 OHM +-5% 1/10W
RL21	061T0603470	RST CHIPR 47 OHM +-5% 1/10W
RB50	061T0603470 0F	RST CHIPR 470 OHM +-1% 1/10W
RU37	061T0603470 0F	RST CHIPR 470 OHM +-1% 1/10W
RB99	061T0603471	RST CHIPR 470OHM +-5% 1/10W
RB98	061T0603471	RST CHIPR 470OHM +-5% 1/10W
RB97	061T0603471	RST CHIPR 470OHM +-5% 1/10W
RB96	061T0603471	RST CHIPR 470OHM +-5% 1/10W
RB95	061T0603471	RST CHIPR 470OHM +-5% 1/10W
RB75	061T0603471	RST CHIPR 470OHM +-5% 1/10W
RB76	061T0603471	RST CHIPR 470OHM +-5% 1/10W
RB94	061T0603471	RST CHIPR 470OHM +-5% 1/10W
RLE3	061T0603472	CHIP 4.7KOHM 1/16W
RLC7	061T0603472	CHIP 4.7KOHM 1/16W
RH71	061T0603472	CHIP 4.7KOHM 1/16W
RH83	061T0603472	CHIP 4.7KOHM 1/16W
RH84	061T0603472	CHIP 4.7KOHM 1/16W
RH85	061T0603472	CHIP 4.7KOHM 1/16W
RH86	061T0603472	CHIP 4.7KOHM 1/16W
RH87	061T0603472	CHIP 4.7KOHM 1/16W
RH88	061T0603472	CHIP 4.7KOHM 1/16W
RH90	061T0603472	CHIP 4.7KOHM 1/16W
RH93	061T0603472	CHIP 4.7KOHM 1/16W
RH94	061T0603472	CHIP 4.7KOHM 1/16W
RH97	061T0603472	CHIP 4.7KOHM 1/16W
RLC6	061T0603472	CHIP 4.7KOHM 1/16W
RA27	061T0603472	CHIP 4.7KOHM 1/16W
RA25	061T0603472	CHIP 4.7KOHM 1/16W
RA16	061T0603472	CHIP 4.7KOHM 1/16W
RW88	061T0603472	CHIP 4.7KOHM 1/16W
RW87	061T0603472	CHIP 4.7KOHM 1/16W
RU38	061T0603472	CHIP 4.7KOHM 1/16W
RU16	061T0603472	CHIP 4.7KOHM 1/16W
RTH7	061T0603472	CHIP 4.7KOHM 1/16W
RTH6	061T0603472	CHIP 4.7KOHM 1/16W
RT24	061T0603472	CHIP 4.7KOHM 1/16W
RT12	061T0603472	CHIP 4.7KOHM 1/16W
RT11	061T0603472	CHIP 4.7KOHM 1/16W
RT10	061T0603472	CHIP 4.7KOHM 1/16W
RT09	061T0603472	CHIP 4.7KOHM 1/16W
RQ27	061T0603472	CHIP 4.7KOHM 1/16W
RQ04	061T0603472	CHIP 4.7KOHM 1/16W

RQ03	061T0603472	CHIP 4.7KOHM 1/16W
RLT4	061T0603472	CHIP 4.7KOHM 1/16W
RLE4	061T0603472	CHIP 4.7KOHM 1/16W
RH70	061T0603472	CHIP 4.7KOHM 1/16W
R3H01	061T0603472	CHIP 4.7KOHM 1/16W
R3H02	061T0603472	CHIP 4.7KOHM 1/16W
RH03	061T0603472	CHIP 4.7KOHM 1/16W
RH08	061T0603472	CHIP 4.7KOHM 1/16W
RH10	061T0603472	CHIP 4.7KOHM 1/16W
RH13	061T0603472	CHIP 4.7KOHM 1/16W
RH16	061T0603472	CHIP 4.7KOHM 1/16W
RH18	061T0603472	CHIP 4.7KOHM 1/16W
RH22	061T0603472	CHIP 4.7KOHM 1/16W
RH23	061T0603472	CHIP 4.7KOHM 1/16W
RH28	061T0603472	CHIP 4.7KOHM 1/16W
RH29	061T0603472	CHIP 4.7KOHM 1/16W
RH31	061T0603472	CHIP 4.7KOHM 1/16W
RH32	061T0603472	CHIP 4.7KOHM 1/16W
RTJ1	061T0603473	CHIP 47KOHM 1/16W
RTJ0	061T0603473	CHIP 47KOHM 1/16W
RTH9	061T0603473	CHIP 47KOHM 1/16W
RLU9	061T0603473	CHIP 47KOHM 1/16W
RJ92	061T0603473	CHIP 47KOHM 1/16W
RJ25	061T0603473	CHIP 47KOHM 1/16W
RC47	061T0603473	CHIP 47KOHM 1/16W
RC45	061T0603473	CHIP 47KOHM 1/16W
RB93	061T0603473	CHIP 47KOHM 1/16W
RTJ3	061T0603473	CHIP 47KOHM 1/16W
RH33	061T0603473	CHIP 47KOHM 1/16W
RB72	061T0603473	CHIP 47KOHM 1/16W
RB74	061T0603473	CHIP 47KOHM 1/16W
RA28	061T0603473	CHIP 47KOHM 1/16W
RB05	061T0603473	CHIP 47KOHM 1/16W
RB06	061T0603473	CHIP 47KOHM 1/16W
RB17	061T0603473	CHIP 47KOHM 1/16W
RB18	061T0603473	CHIP 47KOHM 1/16W
RB92	061T0603473	CHIP 47KOHM 1/16W
RA29	061T0603474	RST CHIPR 470 KOHM +-5% 1/10W
RA30	061T0603474	RST CHIPR 470 KOHM +-5% 1/10W
RJ33	061T0603474	RST CHIPR 470 KOHM +-5% 1/10W
RC08	061T0603511	RST CHIPR 510 OHM +-5% 1/10W
RT03	061T0603511	RST CHIPR 510 OHM +-5% 1/10W
RM78	061T0603511	RST CHIPR 510 OHM +-5% 1/10W
RB52	061T0603561	RST CHIPR 560 OHM +-5% 1/10W
RU71	061T0603561	RST CHIPR 560 OHM +-5% 1/10W
RU36	061T0603561	RST CHIPR 560 OHM +-5% 1/10W
RC30	061T0603561	RST CHIPR 560 OHM +-5% 1/10W
RUA4	061T0603562	RST CHIPR 5.6 KOHM +-5% 1/10W
RU58	061T0603562	RST CHIPR 5.6 KOHM +-5% 1/10W
RLV7	061T0603564	RST CHIPR 560 KOHM +-5% 1/10W
RA79	061T0603680	RST CHIPR 68 OHM +-5% 1/10W
RA83	061T0603680	RST CHIPR 68 OHM +-5% 1/10W
RC09	061T0603680	RST CHIPR 68 OHM +-5% 1/10W
RH48	061T0603680	RST CHIPR 68 OHM +-5% 1/10W
RH49	061T0603680	RST CHIPR 68 OHM +-5% 1/10W
RH74	061T0603680	RST CHIPR 68 OHM +-5% 1/10W
RQ64	061T0603680	RST CHIPR 68 OHM +-5% 1/10W

RT19	061T0603680	RST CHIPR 68 OHM +-5% 1/10W
RT20	061T0603680	RST CHIPR 68 OHM +-5% 1/10W
RT21	061T0603680	RST CHIPR 68 OHM +-5% 1/10W
RT22	061T0603680	RST CHIPR 68 OHM +-5% 1/10W
RT23	061T0603680	RST CHIPR 68 OHM +-5% 1/10W
RT25	061T0603680	RST CHIPR 68 OHM +-5% 1/10W
RT26	061T0603680	RST CHIPR 68 OHM +-5% 1/10W
RT27	061T0603680	RST CHIPR 68 OHM +-5% 1/10W
RT28	061T0603680	RST CHIPR 68 OHM +-5% 1/10W
RT29	061T0603680	RST CHIPR 68 OHM +-5% 1/10W
RT30	061T0603680	RST CHIPR 68 OHM +-5% 1/10W
RT31	061T0603680	RST CHIPR 68 OHM +-5% 1/10W
RUA8	061T0603680	RST CHIPR 68 OHM +-5% 1/10W
RUA9	061T0603680	RST CHIPR 68 OHM +-5% 1/10W
RLS2	061T0603681	RST CHIPR 680 OHM +-5% 1/10W
RJ70	061T0603681	RST CHIPR 680 OHM +-5% 1/10W
RJ61	061T0603681	RST CHIPR 680 OHM +-5% 1/10W
RU07	061T0603682	RST CHIPR 6.8KOHM +-5% 1/10W
RU09	061T0603682	RST CHIPR 6.8KOHM +-5% 1/10W
RU13	061T0603682	RST CHIPR 6.8KOHM +-5% 1/10W
RU14	061T0603682	RST CHIPR 6.8KOHM +-5% 1/10W
RU82	061T0603682	RST CHIPR 6.8KOHM +-5% 1/10W
RU83	061T0603682	RST CHIPR 6.8KOHM +-5% 1/10W
RU96	061T0603682	RST CHIPR 6.8KOHM +-5% 1/10W
RU97	061T0603682	RST CHIPR 6.8KOHM +-5% 1/10W
RLT6	061T0603683	RST CHIPR 68 KOHM +-5% 1/10W
RLU1	061T0603683	RST CHIPR 68 KOHM +-5% 1/10W
RLU6	061T0603683	RST CHIPR 68 KOHM +-5% 1/10W
RLV1	061T0603683	RST CHIPR 68 KOHM +-5% 1/10W
RLV6	061T0603683	RST CHIPR 68 KOHM +-5% 1/10W
RJ73	061T0603684	RST CHIPR 680 KOHM +-5% 1/10W
RJ64	061T0603684	RST CHIPR 680 KOHM +-5% 1/10W
RA51	061T0603684	RST CHIPR 680 KOHM +-5% 1/10W
RA46	061T0603750	75OHM
RA45	061T0603750	75OHM
RA44	061T0603750	75OHM
RA43	061T0603750	75OHM
RA42	061T0603750	75OHM
RA41	061T0603750	75OHM
RAA6	061T0603750	75OHM
RAA5	061T0603750	75OHM
RW52	061T0603750	75OHM
RW51	061T0603750	75OHM
RW50	061T0603750	75OHM
RH92	061T0603750	75OHM
RC33	061T0603821	RST CHIPR 820 OHM +-5% 1/10W
RU57	061T0603821	RST CHIPR 820 OHM +-5% 1/10W
RM77	061T0603821	RST CHIPR 820 OHM +-5% 1/10W
RTJ2	061T0603822	RST CHIPR 8.2 KOHM +-5% 1/10W
RC36	061T0603823	RST CHIPR 82 KOHM +-5% 1/10W
R1C33	061T0805000	RST CHIPR 0 OHM +-5% 1/8W
R1T55	061T0805000	RST CHIPR 0 OHM +-5% 1/8W
LT55	061T0805000	RST CHIPR 0 OHM +-5% 1/8W
LZ01	061T0805000	RST CHIPR 0 OHM +-5% 1/8W
LZ02	061T0805000	RST CHIPR 0 OHM +-5% 1/8W
LZ03	061T0805000	RST CHIPR 0 OHM +-5% 1/8W
R9U12	061T1206000	RST CHIPR 0 OHM +-5% 1/4W

RU23	061T1206479	RST CHIPR 4.7 OHM +-5% 1/4W
RU26	061T1206479	RST CHIPR 4.7 OHM +-5% 1/4W
CJ40	065T0603100 31	CHIP 10PF 50V NPO
CB37	065T0603100 31	CHIP 10PF 50V NPO
CB36	065T0603100 31	CHIP 10PF 50V NPO
CZ08	065T0603100 31	CHIP 10PF 50V NPO
CJ41	065T0603100 31	CHIP 10PF 50V NPO
CJ42	065T0603100 31	CHIP 10PF 50V NPO
CJ43	065T0603100 31	CHIP 10PF 50V NPO
CJ44	065T0603100 31	CHIP 10PF 50V NPO
CJ45	065T0603100 31	CHIP 10PF 50V NPO
CJ46	065T0603100 31	CHIP 10PF 50V NPO
CJ47	065T0603100 31	CHIP 10PF 50V NPO
CJ48	065T0603100 31	CHIP 10PF 50V NPO
CJ49	065T0603100 31	CHIP 10PF 50V NPO
CLA2	065T0603100 31	CHIP 10PF 50V NPO
CBA4	065T0603100 31	CHIP 10PF 50V NPO
CBA5	065T0603100 31	CHIP 10PF 50V NPO
CBA6	065T0603100 31	CHIP 10PF 50V NPO
CBA7	065T0603100 31	CHIP 10PF 50V NPO
CBA8	065T0603100 31	CHIP 10PF 50V NPO
CBA9	065T0603100 31	CHIP 10PF 50V NPO
CZ01	065T0603100 31	CHIP 10PF 50V NPO
CZ06	065T0603100 31	CHIP 10PF 50V NPO
CB35	065T0603100 31	CHIP 10PF 50V NPO
CB34	065T0603100 31	CHIP 10PF 50V NPO
CB33	065T0603100 31	CHIP 10PF 50V NPO
CB32	065T0603100 31	CHIP 10PF 50V NPO
CV27	065T0603101 32	CHIP 100PF 50V X7R
CV28	065T0603101 32	CHIP 100PF 50V X7R
CV29	065T0603101 32	CHIP 100PF 50V X7R
CV30	065T0603101 32	CHIP 100PF 50V X7R
CV31	065T0603101 32	CHIP 100PF 50V X7R
CL50	065T0603101 32	CHIP 100PF 50V X7R
CU02	065T0603101 32	CHIP 100PF 50V X7R
CQ79	065T0603101 32	CHIP 100PF 50V X7R
CQ75	065T0603101 32	CHIP 100PF 50V X7R
CQ73	065T0603101 32	CHIP 100PF 50V X7R
CQ29	065T0603101 32	CHIP 100PF 50V X7R
CL88	065T0603101 32	CHIP 100PF 50V X7R
CL63	065T0603101 32	CHIP 100PF 50V X7R
CU03	065T0603101 32	CHIP 100PF 50V X7R
CU06	065T0603101 32	CHIP 100PF 50V X7R
CU09	065T0603101 32	CHIP 100PF 50V X7R
CU23	065T0603101 32	CHIP 100PF 50V X7R
CU33	065T0603101 32	CHIP 100PF 50V X7R
CU39	065T0603101 32	CHIP 100PF 50V X7R
CV05	065T0603101 32	CHIP 100PF 50V X7R
CV21	065T0603101 32	CHIP 100PF 50V X7R
CV22	065T0603101 32	CHIP 100PF 50V X7R
CV23	065T0603101 32	CHIP 100PF 50V X7R
CV24	065T0603101 32	CHIP 100PF 50V X7R
CV25	065T0603101 32	CHIP 100PF 50V X7R
CV26	065T0603101 32	CHIP 100PF 50V X7R
CL54	065T0603101 32	CHIP 100PF 50V X7R
CL53	065T0603101 32	CHIP 100PF 50V X7R
CL52	065T0603101 32	CHIP 100PF 50V X7R

CL51	065T0603101 32	CHIP 100PF 50V X7R
CA07	065T0603101 32	CHIP 100PF 50V X7R
CA06	065T0603101 32	CHIP 100PF 50V X7R
CA05	065T0603101 32	CHIP 100PF 50V X7R
CL91	065T0603102 32	CHIP 1000PF 50V X7R
CL90	065T0603102 32	CHIP 1000PF 50V X7R
CL89	065T0603102 32	CHIP 1000PF 50V X7R
CL61	065T0603102 32	CHIP 1000PF 50V X7R
CH07	065T0603102 32	CHIP 1000PF 50V X7R
CH06	065T0603102 32	CHIP 1000PF 50V X7R
CAB5	065T0603102 32	CHIP 1000PF 50V X7R
CA12	065T0603102 32	CHIP 1000PF 50V X7R
CA10	065T0603102 32	CHIP 1000PF 50V X7R
CL92	065T0603102 32	CHIP 1000PF 50V X7R
CLB3	065T0603102 32	CHIP 1000PF 50V X7R
CQ61	065T0603102 32	CHIP 1000PF 50V X7R
CU27	065T0603102 32	CHIP 1000PF 50V X7R
CU28	065T0603102 32	CHIP 1000PF 50V X7R
CU29	065T0603102 32	CHIP 1000PF 50V X7R
CU30	065T0603102 32	CHIP 1000PF 50V X7R
CU47	065T0603102 32	CHIP 1000PF 50V X7R
CU73	065T0603102 32	CHIP 1000PF 50V X7R
CV04	065T0603102 32	CHIP 1000PF 50V X7R
CTJ9	065T0603103 32	CHIP 0.01UF 50V X7R
CTJ8	065T0603103 32	CHIP 0.01UF 50V X7R
CTJ7	065T0603103 32	CHIP 0.01UF 50V X7R
CTG5	065T0603103 32	CHIP 0.01UF 50V X7R
CTG3	065T0603103 32	CHIP 0.01UF 50V X7R
CT98	065T0603103 32	CHIP 0.01UF 50V X7R
CT53	065T0603103 32	CHIP 0.01UF 50V X7R
CT51	065T0603103 32	CHIP 0.01UF 50V X7R
CT48	065T0603103 32	CHIP 0.01UF 50V X7R
CT45	065T0603103 32	CHIP 0.01UF 50V X7R
CT20	065T0603103 32	CHIP 0.01UF 50V X7R
CT13	065T0603103 32	CHIP 0.01UF 50V X7R
CT11	065T0603103 32	CHIP 0.01UF 50V X7R
CT09	065T0603103 32	CHIP 0.01UF 50V X7R
CC85	065T0603103 32	CHIP 0.01UF 50V X7R
CBA0	065T0603103 32	CHIP 0.01UF 50V X7R
CZ07	065T0603103 32	CHIP 0.01UF 50V X7R
CZ04	065T0603103 32	CHIP 0.01UF 50V X7R
CZ02	065T0603103 32	CHIP 0.01UF 50V X7R
CB31	065T0603103 32	CHIP 0.01UF 50V X7R
CB27	065T0603103 32	CHIP 0.01UF 50V X7R
CB29	065T0603103 32	CHIP 0.01UF 50V X7R
CB30	065T0603103 32	CHIP 0.01UF 50V X7R
CB26	065T0603103 32	CHIP 0.01UF 50V X7R
CB24	065T0603103 32	CHIP 0.01UF 50V X7R
CTM2	065T0603103 32	CHIP 0.01UF 50V X7R
CTK3	065T0603103 32	CHIP 0.01UF 50V X7R
CTK2	065T0603103 32	CHIP 0.01UF 50V X7R
CTK1	065T0603103 32	CHIP 0.01UF 50V X7R
CTK0	065T0603103 32	CHIP 0.01UF 50V X7R
CB21	065T0603103 32	CHIP 0.01UF 50V X7R
CB22	065T0603103 32	CHIP 0.01UF 50V X7R
CB23	065T0603103 32	CHIP 0.01UF 50V X7R
CB25	065T0603103 32	CHIP 0.01UF 50V X7R

CB28	065T0603103 32	CHIP 0.01UF 50V X7R
CC50	065T0603103 32	CHIP 0.01UF 50V X7R
CC53	065T0603103 32	CHIP 0.01UF 50V X7R
CC57	065T0603103 32	CHIP 0.01UF 50V X7R
CC60	065T0603103 32	CHIP 0.01UF 50V X7R
CC65	065T0603103 32	CHIP 0.01UF 50V X7R
CC70	065T0603103 32	CHIP 0.01UF 50V X7R
CQ54	065T0603104 32	CHIP 0.1UF 50V X7R
CQ55	065T0603104 32	CHIP 0.1UF 50V X7R
CQ56	065T0603104 32	CHIP 0.1UF 50V X7R
CQ57	065T0603104 32	CHIP 0.1UF 50V X7R
CQ58	065T0603104 32	CHIP 0.1UF 50V X7R
CQ59	065T0603104 32	CHIP 0.1UF 50V X7R
CQ60	065T0603104 32	CHIP 0.1UF 50V X7R
CQ53	065T0603104 32	CHIP 0.1UF 50V X7R
CQ52	065T0603104 32	CHIP 0.1UF 50V X7R
CQ51	065T0603104 32	CHIP 0.1UF 50V X7R
CQ50	065T0603104 32	CHIP 0.1UF 50V X7R
CQ49	065T0603104 32	CHIP 0.1UF 50V X7R
CQ48	065T0603104 32	CHIP 0.1UF 50V X7R
CQ47	065T0603104 32	CHIP 0.1UF 50V X7R
CQ46	065T0603104 32	CHIP 0.1UF 50V X7R
CQ62	065T0603104 32	CHIP 0.1UF 50V X7R
CTG0	065T0603104 32	CHIP 0.1UF 50V X7R
CT58	065T0603104 32	CHIP 0.1UF 50V X7R
CT35	065T0603104 32	CHIP 0.1UF 50V X7R
CT33	065T0603104 32	CHIP 0.1UF 50V X7R
CT31	065T0603104 32	CHIP 0.1UF 50V X7R
CT24	065T0603104 32	CHIP 0.1UF 50V X7R
CT18	065T0603104 32	CHIP 0.1UF 50V X7R
CT17	065T0603104 32	CHIP 0.1UF 50V X7R
CT02	065T0603104 32	CHIP 0.1UF 50V X7R
CT01	065T0603104 32	CHIP 0.1UF 50V X7R
CQ67	065T0603104 32	CHIP 0.1UF 50V X7R
CQ66	065T0603104 32	CHIP 0.1UF 50V X7R
CQ65	065T0603104 32	CHIP 0.1UF 50V X7R
CQ64	065T0603104 32	CHIP 0.1UF 50V X7R
CQ63	065T0603104 32	CHIP 0.1UF 50V X7R
CQ45	065T0603104 32	CHIP 0.1UF 50V X7R
CQ06	065T0603104 32	CHIP 0.1UF 50V X7R
CQ07	065T0603104 32	CHIP 0.1UF 50V X7R
CQ08	065T0603104 32	CHIP 0.1UF 50V X7R
CQ09	065T0603104 32	CHIP 0.1UF 50V X7R
CQ10	065T0603104 32	CHIP 0.1UF 50V X7R
CQ11	065T0603104 32	CHIP 0.1UF 50V X7R
CQ12	065T0603104 32	CHIP 0.1UF 50V X7R
CQ13	065T0603104 32	CHIP 0.1UF 50V X7R
CQ14	065T0603104 32	CHIP 0.1UF 50V X7R
CQ15	065T0603104 32	CHIP 0.1UF 50V X7R
CQ16	065T0603104 32	CHIP 0.1UF 50V X7R
CQ17	065T0603104 32	CHIP 0.1UF 50V X7R
CQ18	065T0603104 32	CHIP 0.1UF 50V X7R
CQ19	065T0603104 32	CHIP 0.1UF 50V X7R
CQ24	065T0603104 32	CHIP 0.1UF 50V X7R
CQ05	065T0603104 32	CHIP 0.1UF 50V X7R
CQ44	065T0603104 32	CHIP 0.1UF 50V X7R
CQ39	065T0603104 32	CHIP 0.1UF 50V X7R

CQ38	065T0603104 32	CHIP 0.1UF 50V X7R
CQ37	065T0603104 32	CHIP 0.1UF 50V X7R
CQ35	065T0603104 32	CHIP 0.1UF 50V X7R
CQ34	065T0603104 32	CHIP 0.1UF 50V X7R
CQ33	065T0603104 32	CHIP 0.1UF 50V X7R
CQ32	065T0603104 32	CHIP 0.1UF 50V X7R
CQ30	065T0603104 32	CHIP 0.1UF 50V X7R
CQ28	065T0603104 32	CHIP 0.1UF 50V X7R
CQ27	065T0603104 32	CHIP 0.1UF 50V X7R
CQ26	065T0603104 32	CHIP 0.1UF 50V X7R
CP81	065T0603104 32	CHIP 0.1UF 50V X7R
CP82	065T0603104 32	CHIP 0.1UF 50V X7R
CQ04	065T0603104 32	CHIP 0.1UF 50V X7R
CTG2	065T0603104 32	CHIP 0.1UF 50V X7R
CH10	065T0603104 32	CHIP 0.1UF 50V X7R
CC63	065T0603104 32	CHIP 0.1UF 50V X7R
CA03	065T0603104 32	CHIP 0.1UF 50V X7R
CV17	065T0603104 32	CHIP 0.1UF 50V X7R
CV16	065T0603104 32	CHIP 0.1UF 50V X7R
CV11	065T0603104 32	CHIP 0.1UF 50V X7R
CV10	065T0603104 32	CHIP 0.1UF 50V X7R
CV09	065T0603104 32	CHIP 0.1UF 50V X7R
CV08	065T0603104 32	CHIP 0.1UF 50V X7R
CV07	065T0603104 32	CHIP 0.1UF 50V X7R
CV06	065T0603104 32	CHIP 0.1UF 50V X7R
CV03	065T0603104 32	CHIP 0.1UF 50V X7R
CV02	065T0603104 32	CHIP 0.1UF 50V X7R
CV01	065T0603104 32	CHIP 0.1UF 50V X7R
CV00	065T0603104 32	CHIP 0.1UF 50V X7R
CB45	065T0603104 32	CHIP 0.1UF 50V X7R
CV18	065T0603104 32	CHIP 0.1UF 50V X7R
CV19	065T0603104 32	CHIP 0.1UF 50V X7R
CV20	065T0603104 32	CHIP 0.1UF 50V X7R
CW04	065T0603104 32	CHIP 0.1UF 50V X7R
CW05	065T0603104 32	CHIP 0.1UF 50V X7R
CW06	065T0603104 32	CHIP 0.1UF 50V X7R
CZ51	065T0603104 32	CHIP 0.1UF 50V X7R
CZ52	065T0603104 32	CHIP 0.1UF 50V X7R
CB03	065T0603104 32	CHIP 0.1UF 50V X7R
CA14	065T0603104 32	CHIP 0.1UF 50V X7R
CA15	065T0603104 32	CHIP 0.1UF 50V X7R
CA16	065T0603104 32	CHIP 0.1UF 50V X7R
CB65	065T0603104 32	CHIP 0.1UF 50V X7R
CB66	065T0603104 32	CHIP 0.1UF 50V X7R
CB44	065T0603104 32	CHIP 0.1UF 50V X7R
CU84	065T0603104 32	CHIP 0.1UF 50V X7R
CTL0	065T0603104 32	CHIP 0.1UF 50V X7R
CTK5	065T0603104 32	CHIP 0.1UF 50V X7R
CTK4	065T0603104 32	CHIP 0.1UF 50V X7R
CTJ6	065T0603104 32	CHIP 0.1UF 50V X7R
CTJ5	065T0603104 32	CHIP 0.1UF 50V X7R
CTJ4	065T0603104 32	CHIP 0.1UF 50V X7R
CTJ3	065T0603104 32	CHIP 0.1UF 50V X7R
CTJ2	065T0603104 32	CHIP 0.1UF 50V X7R
CTJ1	065T0603104 32	CHIP 0.1UF 50V X7R
CTJ0	065T0603104 32	CHIP 0.1UF 50V X7R
CTG9	065T0603104 32	CHIP 0.1UF 50V X7R

CTG8	065T0603104 32	CHIP 0.1UF 50V X7R
CTG7	065T0603104 32	CHIP 0.1UF 50V X7R
CTG6	065T0603104 32	CHIP 0.1UF 50V X7R
CTG4	065T0603104 32	CHIP 0.1UF 50V X7R
CTN3	065T0603104 32	CHIP 0.1UF 50V X7R
CU72	065T0603104 32	CHIP 0.1UF 50V X7R
CU55	065T0603104 32	CHIP 0.1UF 50V X7R
CU38	065T0603104 32	CHIP 0.1UF 50V X7R
CU26	065T0603104 32	CHIP 0.1UF 50V X7R
CU20	065T0603104 32	CHIP 0.1UF 50V X7R
CU19	065T0603104 32	CHIP 0.1UF 50V X7R
CU18	065T0603104 32	CHIP 0.1UF 50V X7R
CU15	065T0603104 32	CHIP 0.1UF 50V X7R
CU14	065T0603104 32	CHIP 0.1UF 50V X7R
CU13	065T0603104 32	CHIP 0.1UF 50V X7R
CU12	065T0603104 32	CHIP 0.1UF 50V X7R
CU10	065T0603104 32	CHIP 0.1UF 50V X7R
CU07	065T0603104 32	CHIP 0.1UF 50V X7R
CU05	065T0603104 32	CHIP 0.1UF 50V X7R
CU04	065T0603104 32	CHIP 0.1UF 50V X7R
CG35	065T0603104 32	CHIP 0.1UF 50V X7R
CC55	065T0603104 32	CHIP 0.1UF 50V X7R
CC44	065T0603104 32	CHIP 0.1UF 50V X7R
CC40	065T0603104 32	CHIP 0.1UF 50V X7R
CC39	065T0603104 32	CHIP 0.1UF 50V X7R
CC35	065T0603104 32	CHIP 0.1UF 50V X7R
CC33	065T0603104 32	CHIP 0.1UF 50V X7R
CC31	065T0603104 32	CHIP 0.1UF 50V X7R
CC28	065T0603104 32	CHIP 0.1UF 50V X7R
CC27	065T0603104 32	CHIP 0.1UF 50V X7R
CB92	065T0603104 32	CHIP 0.1UF 50V X7R
CB81	065T0603104 32	CHIP 0.1UF 50V X7R
CB80	065T0603104 32	CHIP 0.1UF 50V X7R
CG46	065T0603104 32	CHIP 0.1UF 50V X7R
CJ20	065T0603104 32	CHIP 0.1UF 50V X7R
CJ18	065T0603104 32	CHIP 0.1UF 50V X7R
CJ16	065T0603104 32	CHIP 0.1UF 50V X7R
CJ13	065T0603104 32	CHIP 0.1UF 50V X7R
CJ10	065T0603104 32	CHIP 0.1UF 50V X7R
CJ08	065T0603104 32	CHIP 0.1UF 50V X7R
CJ06	065T0603104 32	CHIP 0.1UF 50V X7R
CJ03	065T0603104 32	CHIP 0.1UF 50V X7R
CJ01	065T0603104 32	CHIP 0.1UF 50V X7R
CH03	065T0603104 32	CHIP 0.1UF 50V X7R
CH02	065T0603104 32	CHIP 0.1UF 50V X7R
CH01	065T0603104 32	CHIP 0.1UF 50V X7R
CH00	065T0603104 32	CHIP 0.1UF 50V X7R
CB04	065T0603104 32	CHIP 0.1UF 50V X7R
CB02	065T0603104 32	CHIP 0.1UF 50V X7R
CB01	065T0603104 32	CHIP 0.1UF 50V X7R
CB00	065T0603104 32	CHIP 0.1UF 50V X7R
CA96	065T0603104 32	CHIP 0.1UF 50V X7R
CA93	065T0603104 32	CHIP 0.1UF 50V X7R
CA88	065T0603104 32	CHIP 0.1UF 50V X7R
CA85	065T0603104 32	CHIP 0.1UF 50V X7R
CA08	065T0603104 32	CHIP 0.1UF 50V X7R
CA04	065T0603104 32	CHIP 0.1UF 50V X7R

CA02	065T0603104 32	CHIP 0.1UF 50V X7R
C2P77	065T0603104 32	CHIP 0.1UF 50V X7R
C2P76	065T0603104 32	CHIP 0.1UF 50V X7R
CB05	065T0603104 32	CHIP 0.1UF 50V X7R
CB79	065T0603104 32	CHIP 0.1UF 50V X7R
CB77	065T0603104 32	CHIP 0.1UF 50V X7R
CB69	065T0603104 32	CHIP 0.1UF 50V X7R
CB64	065T0603104 32	CHIP 0.1UF 50V X7R
CB62	065T0603104 32	CHIP 0.1UF 50V X7R
CB53	065T0603104 32	CHIP 0.1UF 50V X7R
CB52	065T0603104 32	CHIP 0.1UF 50V X7R
CB51	065T0603104 32	CHIP 0.1UF 50V X7R
CB49	065T0603104 32	CHIP 0.1UF 50V X7R
CB42	065T0603104 32	CHIP 0.1UF 50V X7R
CB41	065T0603104 32	CHIP 0.1UF 50V X7R
CB40	065T0603104 32	CHIP 0.1UF 50V X7R
CB20	065T0603104 32	CHIP 0.1UF 50V X7R
CLR5	065T0603104 32	CHIP 0.1UF 50V X7R
CLR4	065T0603104 32	CHIP 0.1UF 50V X7R
CLR2	065T0603104 32	CHIP 0.1UF 50V X7R
CLP9	065T0603104 32	CHIP 0.1UF 50V X7R
CLP8	065T0603104 32	CHIP 0.1UF 50V X7R
CLP4	065T0603104 32	CHIP 0.1UF 50V X7R
CLP3	065T0603104 32	CHIP 0.1UF 50V X7R
CLP2	065T0603104 32	CHIP 0.1UF 50V X7R
CLP10	065T0603104 32	CHIP 0.1UF 50V X7R
CLN8	065T0603104 32	CHIP 0.1UF 50V X7R
CLN7	065T0603104 32	CHIP 0.1UF 50V X7R
CLN6	065T0603104 32	CHIP 0.1UF 50V X7R
CLN5	065T0603104 32	CHIP 0.1UF 50V X7R
CLR6	065T0603104 32	CHIP 0.1UF 50V X7R
CP80	065T0603104 32	CHIP 0.1UF 50V X7R
CP35	065T0603104 32	CHIP 0.1UF 50V X7R
CP34	065T0603104 32	CHIP 0.1UF 50V X7R
CM90	065T0603104 32	CHIP 0.1UF 50V X7R
CLT6	065T0603104 32	CHIP 0.1UF 50V X7R
CLT5	065T0603104 32	CHIP 0.1UF 50V X7R
CLT4	065T0603104 32	CHIP 0.1UF 50V X7R
CLT3	065T0603104 32	CHIP 0.1UF 50V X7R
CLT2	065T0603104 32	CHIP 0.1UF 50V X7R
CLT1	065T0603104 32	CHIP 0.1UF 50V X7R
CLS5	065T0603104 32	CHIP 0.1UF 50V X7R
CLR9	065T0603104 32	CHIP 0.1UF 50V X7R
CLR8	065T0603104 32	CHIP 0.1UF 50V X7R
CL55	065T0603104 32	CHIP 0.1UF 50V X7R
CL08	065T0603104 32	CHIP 0.1UF 50V X7R
CL07	065T0603104 32	CHIP 0.1UF 50V X7R
CL06	065T0603104 32	CHIP 0.1UF 50V X7R
CL01	065T0603104 32	CHIP 0.1UF 50V X7R
CK45	065T0603104 32	CHIP 0.1UF 50V X7R
CK43	065T0603104 32	CHIP 0.1UF 50V X7R
CK41	065T0603104 32	CHIP 0.1UF 50V X7R
CK40	065T0603104 32	CHIP 0.1UF 50V X7R
CJ71	065T0603104 32	CHIP 0.1UF 50V X7R
CJ57	065T0603104 32	CHIP 0.1UF 50V X7R
CJ33	065T0603104 32	CHIP 0.1UF 50V X7R
CJ30	065T0603104 32	CHIP 0.1UF 50V X7R

CL58	065T0603104 32	CHIP 0.1UF 50V X7R
CLN4	065T0603104 32	CHIP 0.1UF 50V X7R
CLN3	065T0603104 32	CHIP 0.1UF 50V X7R
CLB1	065T0603104 32	CHIP 0.1UF 50V X7R
CLB0	065T0603104 32	CHIP 0.1UF 50V X7R
CLA4	065T0603104 32	CHIP 0.1UF 50V X7R
CL87	065T0603104 32	CHIP 0.1UF 50V X7R
CL86	065T0603104 32	CHIP 0.1UF 50V X7R
CL85	065T0603104 32	CHIP 0.1UF 50V X7R
CL84	065T0603104 32	CHIP 0.1UF 50V X7R
CL64	065T0603104 32	CHIP 0.1UF 50V X7R
CL62	065T0603104 32	CHIP 0.1UF 50V X7R
CL60	065T0603104 32	CHIP 0.1UF 50V X7R
CL59	065T0603104 32	CHIP 0.1UF 50V X7R
CK64	065T0603105 12	CHIP 1UF 16V X7R
CK65	065T0603105 12	CHIP 1UF 16V X7R
CK67	065T0603105 12	CHIP 1UF 16V X7R
CK68	065T0603105 12	CHIP 1UF 16V X7R
CK69	065T0603105 12	CHIP 1UF 16V X7R
CK70	065T0603105 12	CHIP 1UF 16V X7R
CK71	065T0603105 12	CHIP 1UF 16V X7R
CK72	065T0603105 12	CHIP 1UF 16V X7R
CK73	065T0603105 12	CHIP 1UF 16V X7R
CK63	065T0603105 12	CHIP 1UF 16V X7R
CK61	065T0603105 12	CHIP 1UF 16V X7R
CK60	065T0603105 12	CHIP 1UF 16V X7R
CK58	065T0603105 12	CHIP 1UF 16V X7R
CK50	065T0603105 12	CHIP 1UF 16V X7R
CK49	065T0603105 12	CHIP 1UF 16V X7R
CK48	065T0603105 12	CHIP 1UF 16V X7R
CK47	065T0603105 12	CHIP 1UF 16V X7R
CK46	065T0603105 12	CHIP 1UF 16V X7R
CK44	065T0603105 12	CHIP 1UF 16V X7R
CU58	065T0603105 12	CHIP 1UF 16V X7R
CU50	065T0603105 12	CHIP 1UF 16V X7R
CU46	065T0603105 12	CHIP 1UF 16V X7R
CU41	065T0603105 12	CHIP 1UF 16V X7R
CU40	065T0603105 12	CHIP 1UF 16V X7R
CU35	065T0603105 12	CHIP 1UF 16V X7R
CU16	065T0603105 12	CHIP 1UF 16V X7R
CU11	065T0603105 12	CHIP 1UF 16V X7R
CTM3	065T0603105 12	CHIP 1UF 16V X7R
CTK9	065T0603105 12	CHIP 1UF 16V X7R
CTK8	065T0603105 12	CHIP 1UF 16V X7R
CTK7	065T0603105 12	CHIP 1UF 16V X7R
CTK6	065T0603105 12	CHIP 1UF 16V X7R
CT43	065T0603105 12	CHIP 1UF 16V X7R
CLT0	065T0603105 12	CHIP 1UF 16V X7R
CK77	065T0603105 12	CHIP 1UF 16V X7R
CK76	065T0603105 12	CHIP 1UF 16V X7R
CK75	065T0603105 12	CHIP 1UF 16V X7R
CK74	065T0603105 12	CHIP 1UF 16V X7R
CK42	065T0603105 12	CHIP 1UF 16V X7R
CA11	065T0603105 12	CHIP 1UF 16V X7R
CA13	065T0603105 12	CHIP 1UF 16V X7R
CA83	065T0603105 12	CHIP 1UF 16V X7R
CA84	065T0603105 12	CHIP 1UF 16V X7R

CA86	065T0603105 12	CHIP 1UF 16V X7R
CA87	065T0603105 12	CHIP 1UF 16V X7R
CA91	065T0603105 12	CHIP 1UF 16V X7R
CC34	065T0603105 12	CHIP 1UF 16V X7R
CC36	065T0603105 12	CHIP 1UF 16V X7R
CC37	065T0603105 12	CHIP 1UF 16V X7R
CJ35	065T0603105 12	CHIP 1UF 16V X7R
CJ34	065T0603105 12	CHIP 1UF 16V X7R
CJ32	065T0603105 12	CHIP 1UF 16V X7R
CJ31	065T0603105 12	CHIP 1UF 16V X7R
CC78	065T0603105 12	CHIP 1UF 16V X7R
CC76	065T0603105 12	CHIP 1UF 16V X7R
CC69	065T0603105 12	CHIP 1UF 16V X7R
CC68	065T0603105 12	CHIP 1UF 16V X7R
CC46	065T0603105 12	CHIP 1UF 16V X7R
CQ25	065T0603120 31	CHIP 12pF 50V NPO
CB18	065T0603121 32	CHIP 120PF 50V X7R
CB19	065T0603121 32	CHIP 120PF 50V X7R
CB16	065T0603151 32	CHIP 150PF 50V X7R
CB17	065T0603151 32	CHIP 150PF 50V X7R
CH09	065T0603180 31	CHIP 18PF 50V NPO
CH08	065T0603180 31	CHIP 18PF 50V NPO
CLA1	065T0603220 31	CHIP 22PF 50V NPO
CLA0	065T0603220 31	CHIP 22PF 50V NPO
CC42	065T0603220 31	CHIP 22PF 50V NPO
CC08	065T0603223 32	CHIP 0.022UF 50V X7R 0603
CC01	065T0603223 32	CHIP 0.022UF 50V X7R 0603
CC02	065T0603223 32	CHIP 0.022UF 50V X7R 0603
CC04	065T0603223 32	CHIP 0.022UF 50V X7R 0603
CC05	065T0603223 32	CHIP 0.022UF 50V X7R 0603
CC06	065T0603223 32	CHIP 0.022UF 50V X7R 0603
CC07	065T0603223 32	CHIP 0.022UF 50V X7R 0603
CC23	065T0603223 32	CHIP 0.022UF 50V X7R 0603
CC22	065T0603223 32	CHIP 0.022UF 50V X7R 0603
CC20	065T0603223 32	CHIP 0.022UF 50V X7R 0603
CC19	065T0603223 32	CHIP 0.022UF 50V X7R 0603
CC18	065T0603223 32	CHIP 0.022UF 50V X7R 0603
CC17	065T0603223 32	CHIP 0.022UF 50V X7R 0603
CC09	065T0603223 32	CHIP 0.022UF 50V X7R 0603
CC11	065T0603223 32	CHIP 0.022UF 50V X7R 0603
CC14	065T0603223 32	CHIP 0.022UF 50V X7R 0603
CC15	065T0603223 32	CHIP 0.022UF 50V X7R 0603
CC16	065T0603223 32	CHIP 0.022UF 50V X7R 0603
CT04	065T0603229 31	CHIP 2.2PF 50V NPO
CTL9	065T0603330 31	CHIP 33PF 50V NPO
CA89	065T0603330 31	CHIP 33PF 50V NPO
CA90	065T0603330 31	CHIP 33PF 50V NPO
CA98	065T0603330 31	CHIP 33PF 50V NPO
CA99	065T0603330 31	CHIP 33PF 50V NPO
CTL7	065T0603330 31	CHIP 33PF 50V NPO
CAB8	065T0603331 32	CHIP 330PF 50V X7R
CB06	065T0603331 32	CHIP 330PF 50V X7R
CB07	065T0603331 32	CHIP 330PF 50V X7R
CB08	065T0603331 32	CHIP 330PF 50V X7R
CB09	065T0603331 32	CHIP 330PF 50V X7R
CU85	065T0603332 32	CHIP 3300PF 50V X7R
CU32	065T0603332 32	CHIP 3300PF 50V X7R

CU31	065T0603332 32	CHIP 3300PF 50V X7R
CU21	065T0603332 32	CHIP 3300PF 50V X7R
CLA9	065T0603332 32	CHIP 3300PF 50V X7R
CLA8	065T0603332 32	CHIP 3300PF 50V X7R
CLA7	065T0603332 32	CHIP 3300PF 50V X7R
CLA6	065T0603332 32	CHIP 3300PF 50V X7R
CLA5	065T0603332 32	CHIP 3300PF 50V X7R
CJ25	065T0603332 32	CHIP 3300PF 50V X7R
CJ24	065T0603332 32	CHIP 3300PF 50V X7R
CJ23	065T0603332 32	CHIP 3300PF 50V X7R
CJ22	065T0603332 32	CHIP 3300PF 50V X7R
CW03	065T0603470 32	CHIP 47PF 50V X7R
CW02	065T0603470 32	CHIP 47PF 50V X7R
CB11	065T0603471 32	CHIP 470PF 50V NPO
CB10	065T0603471 32	CHIP 470PF 50V NPO
CBA1	065T0603472 32	CHIP 4700PF 50V X7R
CU37	065T0603474 17	CHIP 0.47UF 16V Y5V
CQ31	065T0603561 31	CHIP 560PF 50V NPO
CL80	065T0805225 12	CHIP 2.2UF 16V X7R 0805
CL81	065T0805225 12	CHIP 2.2UF 16V X7R 0805
CL82	065T0805225 12	CHIP 2.2UF 16V X7R 0805
CL83	065T0805225 12	CHIP 2.2UF 16V X7R 0805
CL56	065T0805475 A5	CHIP 4.7UF 10V X5R
CL57	065T0805475 A5	CHIP 4.7UF 10V X5R
CQ01	065T0805475 A5	CHIP 4.7UF 10V X5R
CQ03	065T0805475 A5	CHIP 4.7UF 10V X5R
CQ21	065T0805475 A5	CHIP 4.7UF 10V X5R
CQ23	065T0805475 A5	CHIP 4.7UF 10V X5R
CM85	065T1206106 05	CHIP 10UF 6.3V X5R
CU22	065T1812226 15	CHIP 22UF 16V X5R
CU24	065T1812226 15	CHIP 22UF 16V X5R
CU01	067T 4121003XT	EC 85℃ CHIP 10UF M 16V
CU34	067T 4121003XT	EC 85℃ CHIP 10UF M 16V
CU08	067T 4121003XT	EC 85℃ CHIP 10UF M 16V
CU00	067T 4121003XT	EC 85℃ CHIP 10UF M 16V
CT08	067T 4121003XT	EC 85℃ CHIP 10UF M 16V
CQ43	067T 4121003XT	EC 85℃ CHIP 10UF M 16V
CM84	067T 4121003XT	EC 85℃ CHIP 10UF M 16V
CK39	067T 4121003XT	EC 85℃ CHIP 10UF M 16V
CK38	067T 4121003XT	EC 85℃ CHIP 10UF M 16V
CC52	067T 4121003XT	EC 85℃ CHIP 10UF M 16V
CC32	067T 4121003XT	EC 85℃ CHIP 10UF M 16V
CA20	067T 4121013XT	EC 85℃ SMD CAP 100UF M 16V
CA21	067T 4121013XT	EC 85℃ SMD CAP 100UF M 16V
CAA0	067T 4121013XT	EC 85℃ SMD CAP 100UF M 16V
CAA2	067T 4121013XT	EC 85℃ SMD CAP 100UF M 16V
CC43	067T 4121013XT	EC 85℃ SMD CAP 100UF M 16V
CLP0	067T 4121013XT	EC 85℃ SMD CAP 100UF M 16V
CLP7	067T 4121013XT	EC 85℃ SMD CAP 100UF M 16V
CT30	067T 4121013XT	EC 85℃ SMD CAP 100UF M 16V
CTG1	067T 4121013XT	EC 85℃ SMD CAP 100UF M 16V
CTN1	067T 4122203XT	CAP 85℃ 22UF M 16V XINDECO
CTN0	067T 4122203XT	CAP 85℃ 22UF M 16V XINDECO
CC45	067T 4122203XT	CAP 85℃ 22UF M 16V XINDECO
CQ42	067T 4124703XT	EC 85℃ SMD CAP 47UF M 16V
CQ40	067T 4124703XT	EC 85℃ SMD CAP 47UF M 16V
CQ22	067T 4124703XT	EC 85℃ SMD CAP 47UF M 16V

CQ20	067T 4124703XT	EC 85℃ SMD CAP 47UF M 16V
CQ02	067T 4124703XT	EC 85℃ SMD CAP 47UF M 16V
CQ00	067T 4124703XT	EC 85℃ SMD CAP 47UF M 16V
CLN2	067T 4124703XT	EC 85℃ SMD CAP 47UF M 16V
CG45	067T 4124703XT	EC 85℃ SMD CAP 47UF M 16V
CB90	067T 4124703XT	EC 85℃ SMD CAP 47UF M 16V
CB67	067T 4124703XT	EC 85℃ SMD CAP 47UF M 16V
CAA1	067T 4124703XT	EC 85℃ SMD CAP 47UF M 16V
CA32	067T 4124703XT	EC 85℃ SMD CAP 47UF M 16V
CA09	067T 4124703XT	EC 85℃ SMD CAP 47UF M 16V
CQ69	067T 4124703XT	EC 85℃ SMD CAP 47UF M 16V
CQ70	067T 4124703XT	EC 85℃ SMD CAP 47UF M 16V
CV35	067T 4124703XT	EC 85℃ SMD CAP 47UF M 16V
CB38	067T 4124703XT	EC 85℃ SMD CAP 47UF M 16V
CU45	067T411F2203XT	CAP S105℃ 22UF M 16V XINDECO
CU25	067T411F2203XT	CAP S105℃ 22UF M 16V XINDECO
CU17	067T411F2203XT	CAP S105℃ 22UF M 16V XINDECO
LJ16	071T 56B121 EA	CHIP BEAD
LJ15	071T 56B121 EA	CHIP BEAD
LJ13	071T 56B121 EA	CHIP BEAD
LJ07	071T 56B121 EA	CHIP BEAD
LJ06	071T 56B121 EA	CHIP BEAD
LJ05	071T 56B121 EA	CHIP BEAD
LJ04	071T 56B121 EA	CHIP BEAD
LJ03	071T 56B121 EA	CHIP BEAD
LJ02	071T 56B121 EA	CHIP BEAD
LJ01	071T 56B121 EA	CHIP BEAD
LJ00	071T 56B121 EA	CHIP BEAD
LC37	071T 56B121 EA	CHIP BEAD
LC53	071T 56B221	CHIP BEAD 220 OHM
LC52	071T 56B221	CHIP BEAD 220 OHM
LC36	071T 56B221	CHIP BEAD 220 OHM
LC35	071T 56B221	CHIP BEAD 220 OHM
LC34	071T 56B221	CHIP BEAD 220 OHM
LC33	071T 56B221	CHIP BEAD 220 OHM
LB10	071T 56B221	CHIP BEAD 220 OHM
LB11	071T 56B221	CHIP BEAD 220 OHM
LB12	071T 56B221	CHIP BEAD 220 OHM
LB17	071T 56B221	CHIP BEAD 220 OHM
LC01	071T 56B221	CHIP BEAD 220 OHM
LC03	071T 56B221	CHIP BEAD 220 OHM
LC54	071T 56B221	CHIP BEAD 220 OHM
LJ11	071T 56B221	CHIP BEAD 220 OHM
LJ12	071T 56B221	CHIP BEAD 220 OHM
LL51	071T 56B221	CHIP BEAD 220 OHM
LL52	071T 56B221	CHIP BEAD 220 OHM
LQ05	071T 56B221	CHIP BEAD 220 OHM
LTG1	071T 56B221	CHIP BEAD 220 OHM
LTG2	071T 56B221	CHIP BEAD 220 OHM
LB18	071T 56B221	CHIP BEAD 220 OHM
LJ10	071T 56B221	CHIP BEAD 220 OHM
LH04	071T 56B221	CHIP BEAD 220 OHM
LH03	071T 56B221	CHIP BEAD 220 OHM
LH05	071T 56F102 K	CHIP BEAD 1000OHM
LQ07	071T 56F260 K	CHIP BEAD 26 OHM 0805
LZ50	071T 56F260 K	CHIP BEAD 26 OHM 0805
LV01	071T 56F260 K	CHIP BEAD 26 OHM 0805

LQ04	071T 56F260 K	CHIP BEAD 26 OHM 0805
LQ03	071T 56F260 K	CHIP BEAD 26 OHM 0805
LQ02	071T 56F260 K	CHIP BEAD 26 OHM 0805
LQ01	071T 56F260 K	CHIP BEAD 26 OHM 0805
LLA3	071T 56F260 K	CHIP BEAD 26 OHM 0805
LLA1	071T 56F260 K	CHIP BEAD 26 OHM 0805
LL50	071T 56F260 K	CHIP BEAD 26 OHM 0805
LTG0	071T 56U601	BEAD 600 OHM
LT50	071T 56U601	BEAD 600 OHM
LT49	071T 56U601	BEAD 600 OHM
LT45	071T 56U601	BEAD 600 OHM
LT11	071T 56U601	BEAD 600 OHM
LT10	071T 56U601	BEAD 600 OHM
LLN4	071T 56U601	BEAD 600 OHM
LLN3	071T 56U601	BEAD 600 OHM
LLN2	071T 56U601	BEAD 600 OHM
LLN1	071T 56U601	BEAD 600 OHM
LLN0	071T 56U601	BEAD 600 OHM
LLA2	071T 56U601	BEAD 600 OHM
LTG3	071T 56U601	BEAD 600 OHM
LU12	071T 56U601	BEAD 600 OHM
LU10	071T 56U601	BEAD 600 OHM
LU07	071T 56U601	BEAD 600 OHM
LU06	071T 56U601	BEAD 600 OHM
LU05	071T 56U601	BEAD 600 OHM
LU04	071T 56U601	BEAD 600 OHM
LU01	071T 56U601	BEAD 600 OHM
LTG8	071T 56U601	BEAD 600 OHM
LTG7	071T 56U601	BEAD 600 OHM
LTG6	071T 56U601	BEAD 600 OHM
LTG5	071T 56U601	BEAD 600 OHM
LTG4	071T 56U601	BEAD 600 OHM
LL01	071T 56U601	BEAD 600 OHM
LA06	071T 56U601	BEAD 600 OHM
LA07	071T 56U601	BEAD 600 OHM
LB02	071T 56U601	BEAD 600 OHM
LB03	071T 56U601	BEAD 600 OHM
LB04	071T 56U601	BEAD 600 OHM
LJ17	071T 56U601	BEAD 600 OHM
RB71	071T 59G301	CHIP BEAD 300OHM
RB73	071T 59G301	CHIP BEAD 300OHM
LC57	073T 6347810K	CHIP INDUCTOR 0.47UH 10%FLMA-1
LB31	073T 8510910M	chip inductor 0805 1.0uH +-10%
LB24	073T 8510910M	chip inductor 0805 1.0uH +-10%
LB23	073T 8510910M	chip inductor 0805 1.0uH +-10%
LB22	073T 8510910M	chip inductor 0805 1.0uH +-10%
LB21	073T 8510910M	chip inductor 0805 1.0uH +-10%
LB20	073T 8510910M	chip inductor 0805 1.0uH +-10%
LJ58	073T253S 1 B	SMD CHOKE
LJ56	073T253S 1 B	SMD CHOKE
LJ54	073T253S 1 B	SMD CHOKE
LJ52	073T253S 1 B	SMD CHOKE
LJ50	073T253S 1 B	SMD CHOKE
LH02	073T253S 1 B	SMD CHOKE
LB37	073T253S 1 B	SMD CHOKE
LB36	073T253S 1 B	SMD CHOKE
LB35	073T253S 1 B	SMD CHOKE

LB34	073T253S 1 B	SMD CHOKE
LU02	073T253S 8 B	SMD INDUCTOR 10UH SCRB7045-100
LU00	073T253S 9 B	CHOKE COIL
LU03	073T253S 9 B	CHOKE COIL
DH00	081T 14 1	CHIP LED GREEN 1206
R1U01	084T 52 16	CHIP FUSE SET003 3A 125V
R1U04	084T 52 16	CHIP FUSE SET003 3A 125V
JM64	088T 341 1 TN	NO APP
ZDU17	093T 39144	ZENER MLL5226B BY FULL POWER
DW02	093T 64 42 P	BAV70 SOT23
DW03	093T 64 42 P	BAV70 SOT23
DA02	093T 6432V	LL4148-GSO8 SMD BY VISHA
DC59	093T 6432V	LL4148-GSO8 SMD BY VISHA
DH01	093T 6432V	LL4148-GSO8 SMD BY VISHA
DH03	093T 6432V	LL4148-GSO8 SMD BY VISHA
DH09	093T 6432V	LL4148-GSO8 SMD BY VISHA
DH05	093T 6432V	LL4148-GSO8 SMD BY VISHA
DH04	093T 6432V	LL4148-GSO8 SMD BY VISHA
DU22	093T 6432V	LL4148-GSO8 SMD BY VISHA
DU23	093T 6432V	LL4148-GSO8 SMD BY VISHA
DM11	093T 6432V	LL4148-GSO8 SMD BY VISHA
DM10	093T 6432V	LL4148-GSO8 SMD BY VISHA
DL03	093T 6432V	LL4148-GSO8 SMD BY VISHA
DL02	093T 6432V	LL4148-GSO8 SMD BY VISHA
DL01	093T 6432V	LL4148-GSO8 SMD BY VISHA
DL00	093T 6432V	LL4148-GSO8 SMD BY VISHA
DJ08	093T 6432V	LL4148-GSO8 SMD BY VISHA
DJ07	093T 6432V	LL4148-GSO8 SMD BY VISHA
DW12	093T 6433P	BAV99
DW11	093T 6433P	BAV99
DW10	093T 6433P	BAV99
DH10	093T 6433P	BAV99
DH07	093T 6433P	BAV99
DA07	093T 6433P	BAV99
DA06	093T 6433P	BAV99
DA05	093T 6433P	BAV99
DA04	093T 6433P	BAV99
XH00	093T 22S64B H	HSX840GA 27.0000MHZ
XTG0	093T 22S82B H	HSX840GA 25.14 MHZ
YLA0	093T 22S83B H	HSX840GA 16.00MHZ
DA01	093T 39S 10 T	RLZ6.8B LLDS
DW04	093T 39S 10 T	RLZ6.8B LLDS
DW05	093T 39S 10 T	RLZ6.8B LLDS
DW06	093T 39S 10 T	RLZ6.8B LLDS
DW08	093T 39S 10 T	RLZ6.8B LLDS
DW13	093T 39S 10 T	RLZ6.8B LLDS
DW14	093T 39S 10 T	RLZ6.8B LLDS
DW15	093T 39S 10 T	RLZ6.8B LLDS
DW16	093T 39S 10 T	RLZ6.8B LLDS
DW17	093T 39S 10 T	RLZ6.8B LLDS
DW18	093T 39S 10 T	RLZ6.8B LLDS
DW19	093T 39S 10 T	RLZ6.8B LLDS
DW20	093T 39S 10 T	RLZ6.8B LLDS
DB01	093T 39S 10 T	RLZ6.8B LLDS
DH08	093T 39S 10 T	RLZ6.8B LLDS
DJ01	093T 39S 24 T	RLZ 5.6B LLDS
ZU21	093T 39S 44 T	RLZ18B

ZDA01	093T 60S 9 T	BAT43W S0D-123 PANJIT
ZDA00	093T 60S 9 T	BAT43W S0D-123 PANJIT
ZDU07	093T2004 2	SR24/PANJIT-SMT
ZDU05	093T2004 2	SR24/PANJIT-SMT
	715T1796 D	MAIN BOARD PCB
	IOPFEA2P	IO BOARD
CN2	033T3802 13	WAFER PH-13
CN4	033T8027 14	DUAL 7X2 CONNECTOR
CN3	033T8027 16	WAFER 16PIN 2.0mm DIP
CN1	033T8027 20	WAFER 2*10P 2.0MM
J3	088T 78 13 9C	RCA JACK
J2	088T 78 13 9C	RCA JACK
J5	088T 78 1320C	RCA JACK
J4	088T 78 1323C	RCA JACK 1+2 W+R/Y
J1	088T 78 137CL	AV-S-01-Y
L3	073T 54229 5T	PEAKING COIL 2.2UH 5% 1/4W
L2	073T 54229 5T	PEAKING COIL 2.2UH 5% 1/4W
L1	073T 54229 5T	PEAKING COIL 2.2UH 5% 1/4W
L7	073T 54229 5T	PEAKING COIL 2.2UH 5% 1/4W
L8	073T 54229 5T	PEAKING COIL 2.2UH 5% 1/4W
L11	073T 54229 5T	PEAKING COIL 2.2UH 5% 1/4W
L13	073T 54229 5T	PEAKING COIL 2.2UH 5% 1/4W
L5	073T 54229 5T	PEAKING COIL 2.2UH 5% 1/4W
L6	073T 54229 5T	PEAKING COIL 2.2UH 5% 1/4W
L4	073T 54229 5T	PEAKING COIL 2.2UH 5% 1/4W
Q8	057T 417 4	CHIP PMBS3904 BY PHILIPS
R3A01	061T0603000	CHIP 0OHM 1/16W
R3A02	061T0603000	CHIP 0OHM 1/16W
R3A03	061T0603000	CHIP 0OHM 1/16W
R3A04	061T0603000	CHIP 0OHM 1/16W
R46	061T0603223	CHIP 22KOHM 1/16W
R3A05	061T0603471	RST CHIPR 470OHM +-5% 1/10W
R3A06	061T0603471	RST CHIPR 470OHM +-5% 1/10W
R10	061T0603473	CHIP 47KOHM 1/16W
R11	061T0603473	CHIP 47KOHM 1/16W
R15	061T0603473	CHIP 47KOHM 1/16W
R16	061T0603473	CHIP 47KOHM 1/16W
R2	061T0603473	CHIP 47KOHM 1/16W
R3	061T0603473	CHIP 47KOHM 1/16W
R4	061T0603473	CHIP 47KOHM 1/16W
R5	061T0603473	CHIP 47KOHM 1/16W
R8	061T0603473	CHIP 47KOHM 1/16W
R9	061T0603473	CHIP 47KOHM 1/16W
R47	061T0603561	RST CHIPR 560 OHM +-5% 1/10W
R22	061T0603750	75OHM
R21	061T0603750	75OHM
R45	061T0603750	75OHM
R43	061T0603750	75OHM
R20	061T0603750	75OHM
R1	061T0603750	75OHM
C7	065T0603101 32	CHIP 100PF 50V X7R
C6	065T0603101 32	CHIP 100PF 50V X7R
C1	065T0603101 32	CHIP 100PF 50V X7R
C22	065T0603104 32	CHIP 0.1UF 50V X7R
C23	065T0603104 32	CHIP 0.1UF 50V X7R
C15	065T0603271 31	CHIP 270PF 50V NPO
C10	065T0603471 32	CHIP 470PF 50V NPO

C11	065T0603471 32	CHIP 470PF 50V NPO
C16	065T0603471 32	CHIP 470PF 50V NPO
C17	065T0603471 32	CHIP 470PF 50V NPO
C2	065T0603471 32	CHIP 470PF 50V NPO
C3	065T0603471 32	CHIP 470PF 50V NPO
C4	065T0603471 32	CHIP 470PF 50V NPO
C5	065T0603471 32	CHIP 470PF 50V NPO
C8	065T0603471 32	CHIP 470PF 50V NPO
C9	065T0603471 32	CHIP 470PF 50V NPO
C21	067T 4121013XT	EC 85℃ SMD CAP 100UF M 16V
L20	071T 56U601	BEAD 600 OHM
L10	071T 56Z121	BEAD 120 OHM
L12	071T 56Z121	BEAD 120 OHM
L14	071T 56Z121	BEAD 120 OHM
L15	071T 56Z121	BEAD 120 OHM
L16	071T 56Z121	BEAD 120 OHM
L17	071T 56Z121	BEAD 120 OHM
L18	071T 56Z121	BEAD 120 OHM
FB1	071T 59B121 K	CHIP BEAD
FB2	071T 59B121 K	CHIP BEAD
FB5	071T 59B121 K	CHIP BEAD
	715T1790 1	I/O BOARD PCB
	Q07T 1 5D28	wooden pallet
	Q40T 260700 5A	Rating label
	Q40T 58170017A	I/O LABEL
	Q41T780070045A	2607 QSG
	Q41T780070053B	VGA manual adjustment for W2607C
	Q44T2601700 3A	CARTON
	Q44T3231 21 20	CR WASHER
	QM1T 130 5125	SCREW
	QM1T2040 4225 GP	SCREW
	QM1T2040 10 47 GP	SCREW
	QM1T2040 12 47 GP	SCREW
	QM1T2330 8120	SCREW
	QQ1T 330 6 47 GP	SCREW
	QQ1T2330 8120	SCREW
	QQ1T2330 8120	SCREW
	041T780070013A	23" PIG FOR DAO
	045T 76 28DE3	PE BAG FOR MANUAL
	Q41T780070046A	2607 MANUAL

14. Different Parts List

Diversity Of E265GHNKDEDFNP Compared With EEF5GHNKDEDMJMP		
Location	**Part No.**	**Description**
	007T 7 T 6	COMPOUND PALLET
	089T402A18N IS	POWER CORD
	095T8014 13613	WIRE HARNESS
	705LEF5FB34012	BACK COVER ASS'Y
	PTPFDA5P	SIDE BOARD
CN1	095T8014 13614	WIRE HARNESS
	ADPC24180B3D1P	ADAPTER BOARD
R988	061T0805472	RST CHIPR 4.7 KOHM +-5% 1/8W
C964	065T0805475 15	CHIP 4.7UF 16V X5R
	CBPFEF5KGHDBJP	MAIN BOARD
ULA7	056T1133 68DT3	M25P05-AVMN6TP S0-8 ST
UP14	056T1133 83	IC M24C64-WDW6TP ST
UP80	056T11336131ST	IC NAND256W3A2BN6E ST
RP69	061T0603000	CHIP 0OHM 1/16W
RP71	061T0603000	CHIP 0OHM 1/16W
RP73	061T0603000	CHIP 0OHM 1/16W
RP75	061T0603000	CHIP 0OHM 1/16W
RP77	061T0603000	CHIP 0OHM 1/16W
RP79	061T0603000	CHIP 0OHM 1/16W
RQ79	061T0805151	RST CHIPR 150 OHM +-5% 1/8W
CLT7	065T0805225 12	CHIP 2.2UF 16V X7R 0805
	715T1796 E	MAIN BOARD PCB
	Q07T 1 5D28 X	WOODEN PALLET

Diversity Of E265GHNKDEDLNP Compared With EEF5GHNKDEDMJMP		
Location	**Part No.**	**Description**
	007T 7 T 6	COMPOUND PALLET
	089T402A18N IS	POWER CORD
	ADPC24180B3D1P	ADAPTER BOARD
R988	061T0805472	RST CHIPR 4.7 KOHM +-5% 1/8W
C964	065T0805475 15	CHIP 4.7UF 16V X5R
	CBPFEF5KGHDAJP	MAIN BOARD
ULA7	056T1133 68DT3	M25P05-AVMN6TP S0-8 ST
UP14	056T1133 83	IC M24C64-WDW6TP ST
UP80	056T11336131ST	IC NAND256W3A2BN6E ST
RP69	061T0603000	CHIP 0OHM 1/16W
RP71	061T0603000	CHIP 0OHM 1/16W
RP73	061T0603000	CHIP 0OHM 1/16W
RP79	061T0603000	CHIP 0OHM 1/16W
RP77	061T0603000	CHIP 0OHM 1/16W
RP75	061T0603000	CHIP 0OHM 1/16W
RQ79	061T0805151	RST CHIPR 150 OHM +-5% 1/8W

Diversity Of E265GHNKDEDMNP Compared With EEF5GHNKDEDMJMP		
Location	**Part No.**	**Description**
	007T 7 T 6	COMPOUND PALLET
	089T402A18N IS	POWER CORD
	095T8014 13613	WIRE HARNESS
	705LEF5FB34012	BACK COVER ASS'Y
	PTPFDA5P	SIDE BOARD
CN1	095T8014 13614	WIRE HARNESS
	750TVGG0X2121N	PANEL LC260WX2-SLB2 KR LPL
	AD24180B4D1P	ADAPTER BOARD
R988	061T0805472	RST CHIPR 4.7 KOHM +-5% 1/8W
C964	065T0805475 15	CHIP 4.7UF 16V X5R
	715T1624 B D3	POWER BOARD PCB
TVS901	006T 31502	1.5MM RIVET
C909	006T 31502	1.5MM RIVET
C908	006T 31502	1.5MM RIVET
	CBPFEF5KGHDBJP	MAIN BOARD
ULA7	056T1133 68DT3	M25P05-AVMN6TP S0-8 ST
UP14	056T1133 83	IC M24C64-WDW6TP ST
UP80	056T11336131ST	IC NAND256W3A2BN6E ST
RP69	061T0603000	CHIP 0OHM 1/16W
RP71	061T0603000	CHIP 0OHM 1/16W
RP73	061T0603000	CHIP 0OHM 1/16W
RP75	061T0603000	CHIP 0OHM 1/16W
RP77	061T0603000	CHIP 0OHM 1/16W
RP79	061T0603000	CHIP 0OHM 1/16W
RQ79	061T0805151	RST CHIPR 150 OHM +-5% 1/8W
CLT7	065T0805225 12	CHIP 2.2UF 16V X7R 0805
	715T1796 E	MAIN BOARD PCB
	Q07T 1 5D28 X	WOODEN PALLET