EL1.1U AA

EL1.1UAA

Model-Chassis relation

Related Model-Chassis Number(s)

The following models have been found for chassis: EL1.1UAA
Please select one of the listed chassis to fetch its related documents.

1.	26HF5334D/27	7.	32PF7321D/37	13.	42PF5421D/37
2.	26HF5334D/27B	8.	32PF7321D/37B	14.	42PF5421D/37B
3.	26PF5321D/37	9.	32PF7421D/37	15.	42PF7421D/37
4.	26PF5321D/37B	10.	32PF7421D/37B	16.	42PF7421D/37B
5.	32PF5321D/37	11.	37PF7321D/37	17.	42PF7421D/37E
6.	32PF5321D/37B	12.	37PF7321D/37B		

Color Television **Chassis**

EL1.1U

AA

Service
Service
Service

F_15400_000.eps
200505

Service Manual

Contents **Page**

1. Technical Specifications, Connections, and Chassis Overview 2
2. Safety Instructions, Warnings, and Notes 6
3. Directions for Use 8
4. Mechanical Instructions 9
5. Service Modes, Error Codes, and Fault Finding 15
6. *Block Diagrams, Test Point Overviews, and Waveforms*
   - Wiring Diagram 26” LCD 33
   - Wiring Diagram 32” LCD 34
   - Wiring Diagram 37” LCD 35
   - Wiring Diagram 42” LCD 36
   - Block Diagram Supply 32” 37
   - Block Diagram Supply 37” 38
   - Block Diagram Supply 42” 39
   - Block Diagram Video 40
   - Block Diagram Audio 41
   - I2C IC’s Overview 43
   - Supply Lines Overview 44
7. *Circuit Diagrams and PWB Layouts* *Diagram* *PWB*
   - LCD Supply (32”): Mains Filter + Standby (A1) 45 47-50
   - LCD Supply (32”): Supply (A2) 46 47-50
   - LCD Supply (37”): Mains Filter + Standby (A1) 51 53-58
   - LCD Supply (37”): Supply (A2) 52 53-58
   - LCD Supply (42”): MF + Standby Part A (A1) 59 63-68
   - LCD Supply (42”): Supply Part A (A2) 60 63-68
   - LCD Supply (42”): MF + Standby Part B (A3) 61 63-68
   - LCD Supply (42”): Supply Part B (A4) 62 63-68
   - Small Signal Board .3 Version (B1-B8) 69-97 100-105
   - SSB: SRP List Part 1 (For both .3 & .4 version) 98
   - SSB: SRP List Part 2 (For both .3 & .4 version) 99
   - Small Signal Board .4 Version (B1-B8) 106-134 135-140
   - Side I/O Panel: (26” & 32”) (D) 141 142
   - Side I/O Panel: (37” & 42”) (D) 143 144

Contents **Page**

   - Control Panel (26” & 32”) (E) 145 146
   - Control Panel (37” & 42”) (E) 145 147
   - Front IR / LED Panel (26”) (J) 148 148
   - Front IR / LED Panel (32”, 37”, & 42”) (J) 149 149
   - Standby/Audio Panel: Connections (SA1) 150 153-155
   - Standby/Audio Panel: Standby (32”& Up) (SA2) 151 153-155
   - Standby/Audio Panel: Audio (32”& Up) (SA3) 152 153-155
8. Alignments 157
9. Circuit Descriptions, Abbreviation List, and IC Data Sheets 163
   - Abbreviation List 165
   - IC Data Sheets 168
10. Spare Parts List 178
11. Revision List 189

©Copyright 2006 Philips Consumer Electronics B.V. Eindhoven, The Netherlands.
All rights reserved. No part of this publication may be reproduced, stored in a retrieval system or transmitted, in any form or by any means, electronic, mechanical, photocopying, or otherwise without the prior permission of Philips.

Published by WS 0665 BG CD Customer Service Printed in the Netherlands Subject to modification EN 3122 785 16291

PHILIPS

1. Technical Specifications, Connections, and Chassis Overview

Index of this chapter:

1.1 Technical Specifications
1.2 Connection Overview
1.3 Chassis Overview

Notes:

- Some models in this chassis range have a different mechanical construction. The information given here is therefore model specific.
- Figures below can deviate slightly from the actual situation, due to the different set executions.
- Specifications are indicative (subject to change).

1.1 Technical Specifications

1.1.1 Vision

Display type	:	LCD
Screen size	:	26” (67 cm), 16:9
	:	32” (82 cm), 16:9
	:	37” (94 cm), 16:9
	:	42” (107 cm), 16:9
Resolution (HxV pixels)	:	1366(*3)x768p
Min. contrast ratio	:	600:1
Min. light output (cd/m^2)	:	500
Max. response time (ms)	:	12
Viewing angle (HxV degrees)	:	176x176
Tuning system	:	PLL
TV Color systems	:	ATSC, NTSC
Video playback	:	NTSC
Cable	:	Unscrambled digital cable - QAM
Tuner bands	:	VHF, UHF, S, Hyper
Supported video formats	:	640x480i-1fH
	:	640x480p-2fH
	:	1280x720p-3fH
	:	1920x1080i-2fH
Supported computer formats	:	640x480 @ 60Hz
	:	800x600 @ 60Hz
	:	1024x768 @ 60Hz
	:	1366x768 @ 60Hz

1.1.2 Sound

Sound systems	:	AV Stereo
	:	BTSC
	:	Dolby Digital (AC3)
Maximum power (W_{RMS})	:	2 x 15
	:	2 x 8 (26” only)

1.1.3 Multimedia

Supported file formats	:	JPEG
	:	MP3
	:	Slideshow (.alb)
USB input	:	USB1.1

1.1.4 Miscellaneous

Power supply:		
- Mains voltage (V_{AC})	:	100 - 240 (26”)
	:	110 - 120 (32”, 37”, 42”)
- Mains frequency (Hz)	:	50/60 (26”)
	:	60 (32”, 37”, 42”)
Ambient conditions:		
- Temperature range (°C)	:	+5 to +40
- Maximum humidity	:	90% R.H.

Power consumption (values are indicative)

- Normal operation (W)	:	≈ 130 (26”)
	:	≈ 140 (32”)
	:	≈ 190 (37”)
	:	≈ 270 (42”)
- Stand-by (W)	:	< 1

Dimensions (WxHxD in inch)	:	27.5x19.5x3.9 (26”)
	:	36.8x20.3.0x4.7 (32”)
	:	44x24.3x4.1 (37”)
	:	49.2x27.1x4.4 (42”)
Weight, stand included (kg/lbs)	:	13/28.6 (26”)
	:	19/42.2 (32”)
	:	26/57 (37”)
	:	32/70.4 (42”)

1.2 Connection Overview

Note: The following connector color abbreviations are used (acc. to DIN/IEC 757): Bk= Black, Bu= Blue, Gn= Green, Gy= Grey, Rd= Red, Wh= White, and Ye= Yellow.

1.2.1 Side Connections

G_16290_067.eps
300106

Figure 1-1 Side I/O connections

Mini Jack: Audio Headphone - Out

Bk	- Headphone	32 - 600 ohm / 10 mW

Cinch: Video CVBS - In, Audio - In

Ye	- Video CVBS	1 V_{PP} / 75 ohm
Wh	- Audio L	0.5 V_{RMS} / 10 kohm
Rd	- Audio R	0.5 V_{RMS} / 10 kohm

S-Video (Hosiden): Video Y/C - In

1	- Ground Y	Gnd
2	- Ground C	Gnd
3	- Video Y	1 V_{PP} / 75 ohm
4	- Video C	0.3 V_{PP}P / 75 ohm

USB1.1

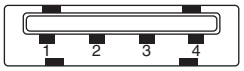

E_06532_022.eps
300904

Figure 1-2 USB (type A)

1	- +5V		
2	- Data (-)		
3	- Data (+)		
4	- Ground	Gnd	

1.2.2 Rear Connections

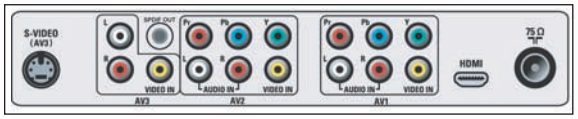

G_16290_068.eps
300106

Figure 1-3 Rear connections

AV3 S-Video (Hosiden): Video Y/C - In

1	- Ground Y	Gnd	
2	- Ground C	Gnd	
3	- Video Y	1 V_{PP} / 75 ohm	
4	- Video C	0.3 V_{PP}P / 75 ohm	

AV3 Cinch: Video CVBS - In

Ye	- Video CVBS	1 V_{PP} / 75 ohm	

AV3 Cinch: Audio - In

Wh	- Audio L	0.5 V_{RMS} / 10 kohm	
Rd	- Audio R	0.5 V_{RMS} / 10 kohm	

Cinch: S/PDIF - Out

Bk	- Coaxial	0.4 - 0.6V_{PP} / 75 ohm	

AV2 Cinch: Video YPbPr - In

Gn	- Video Y	1 V_{PP} / 75 ohm	
Bu	- Video Pb	0.7 V_{PP} / 75 ohm	
Rd	- Video Pr	0.7 V_{PP} / 75 ohm	

AV2 Cinch: Video CVBS - In

Ye	- Video CVBS	1 V_{PP} / 75 ohm	

AV2 Cinch: Audio - In

Wh	- Audio L	0.5 V_{RMS} / 10 kohm	
Rd	- Audio R	0.5 V_{RMS} / 10 kohm	

AV1 Cinch: Video YPbPr - In

Gn	- Video Y	1 V_{PP} / 75 ohm	
Bu	- Video Pb	0.7 V_{PP} / 75 ohm	
Rd	- Video Pr	0.7 V_{PP} / 75 ohm	

AV1 Cinch: Video CVBS - In

Ye	- Video CVBS	1 V_{PP} / 75 ohm	

AV1 Cinch: Audio - In

Wh	- Audio L	0.5 V_{RMS} / 10 kohm	
Rd	- Audio R	0.5 V_{RMS} / 10 kohm	

HDMI 1: Digital Video, Digital Audio - In

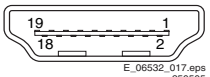

E_06532_017.eps
250505

Figure 1-4 HDMI (type A) connector

1	- D2+	Data channel	
2	- Shield	Gnd	
3	- D2-	Data channel	
4	- D1+	Data channel	
5	- Shield	Gnd	
6	- D1-	Data channel	
7	- D0+	Data channel	
8	- Shield	Gnd	
9	- D0-	Data channel	
10	- CLK+	Data channel	
11	- Shield	Gnd	
12	- CLK-	Data channel	
13	- n.c.		
14	- n.c.		
15	- DDC_SCL	DDC clock	
16	- DDC_SDA	DDC data	
17	- Ground	Gnd	
18	- +5V		
19	- HPD	Hot Plug Detect	
20	- Ground	Gnd	

Aerial - In

-	- F-type (US)	Coax, 75 ohm	

1.3 Chassis Overview

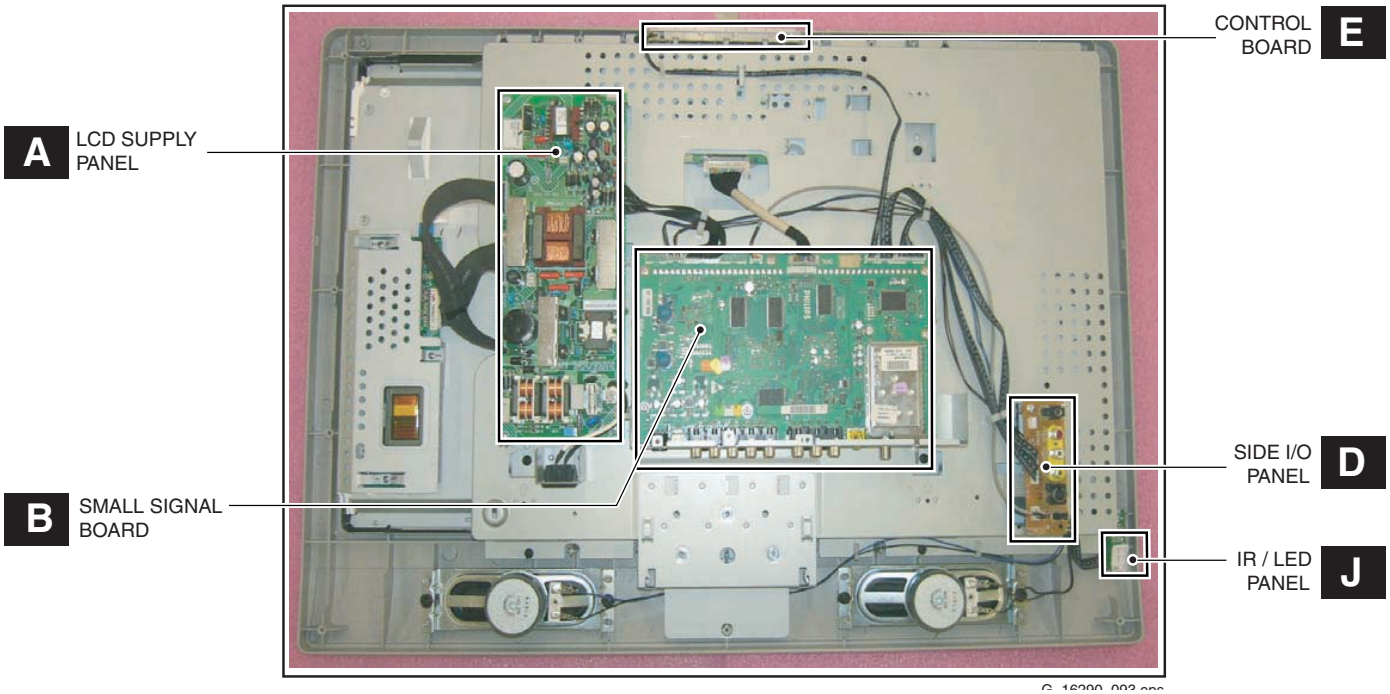

Figure 1-5 PWB/CBA locations (26-inch model)

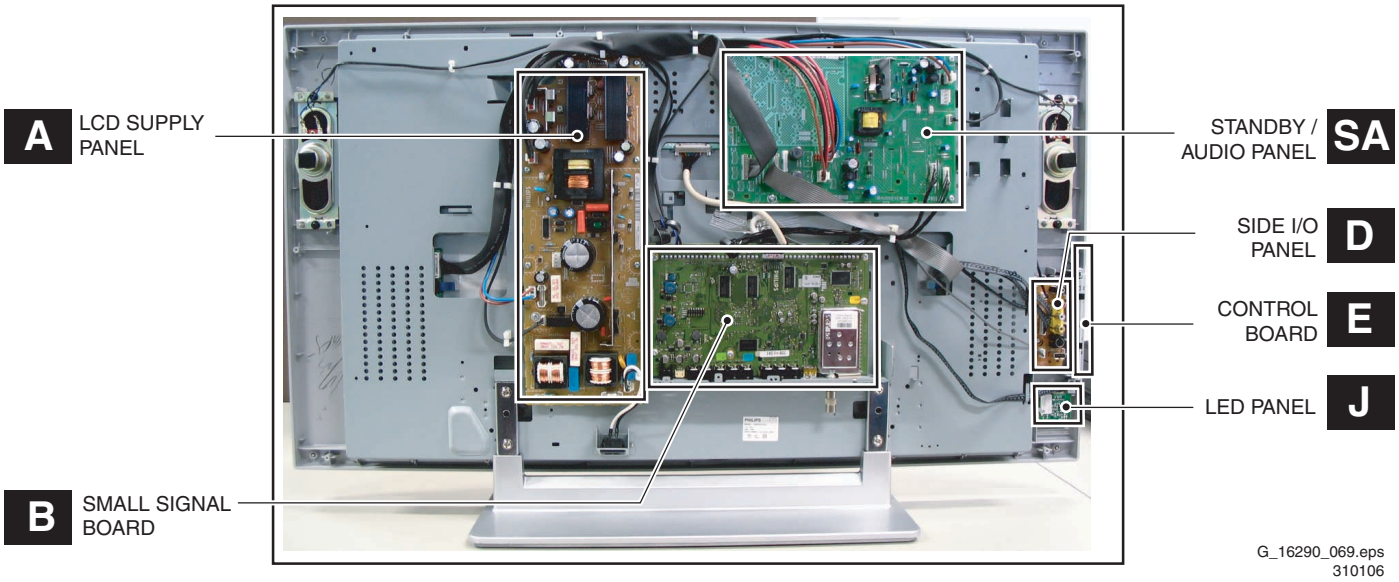

Figure 1-6 PWB/CBA locations (32-inch model)

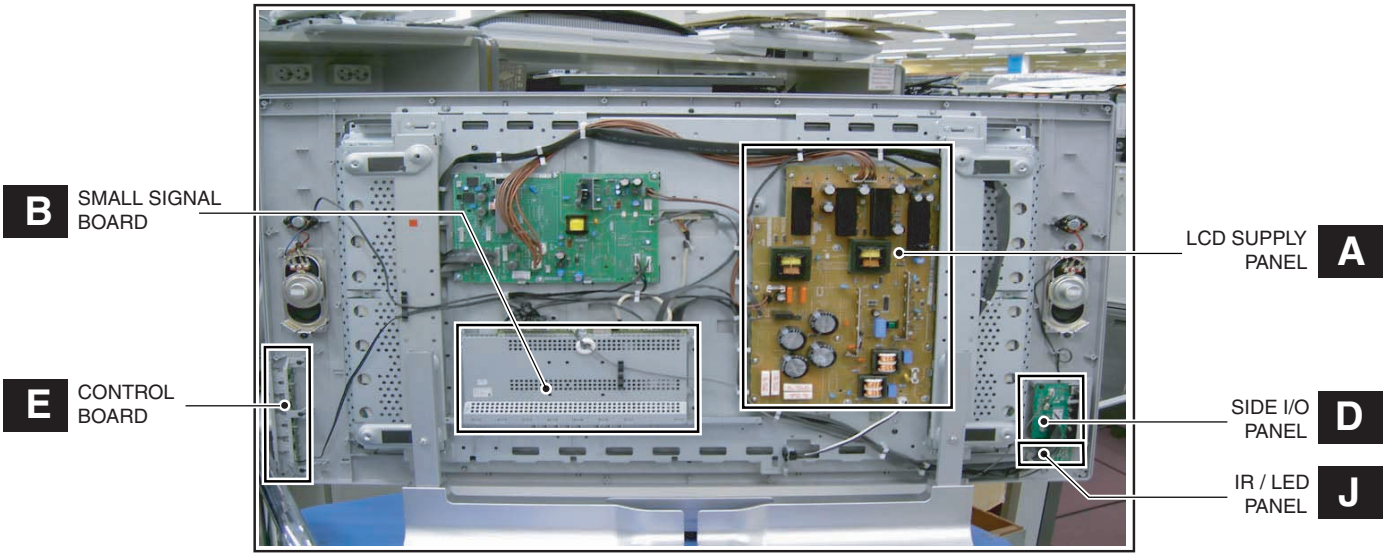

Figure 1-7 PWB/CBA locations (37-inch model)

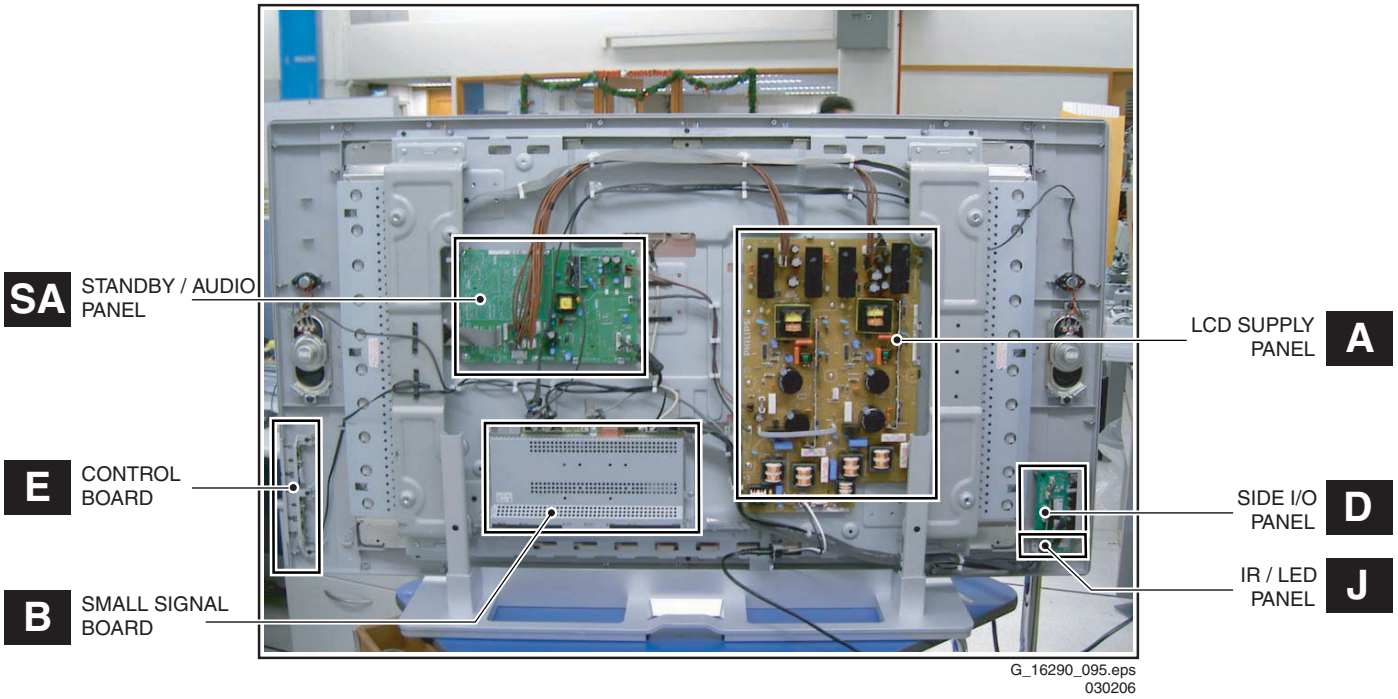

Figure 1-8 PWB/CBA locations (42-inch model)

2. Safety Instructions, Warnings, and Notes

Index of this chapter:

2.1 Safety Instructions
2.2 Warnings
2.3 Notes

2.1 Safety Instructions

Safety regulations require that **during** a repair:

- Connect the set to the Mains/AC Power via an isolation transformer (> 800 VA).
- Replace safety components, indicated by the symbol ⚠, only by components identical to the original ones. Any other component substitution (other than original type) may increase risk of fire or electrical shock hazard.

Safety regulations require that **after** a repair, the set must be returned in its original condition. Pay in particular attention to the following points:

- Route the wire trees correctly and fix them with the mounted cable clamps.
- Check the insulation of the Mains/AC Power lead for external damage.
- Check the strain relief of the Mains/AC Power cord for proper function.
- Check the electrical DC resistance between the Mains/AC Power plug and the secondary side (only for sets which have a Mains/AC Power isolated power supply):
  1. Unplug the Mains/AC Power cord and connect a wire between the two pins of the Mains/AC Power plug.
  2. Set the Mains/AC Power switch to the "on" position (keep the Mains/AC Power cord unplugged!).
  3. Measure the resistance value between the pins of the Mains/AC Power plug and the metal shielding of the tuner or the aerial connection on the set. The reading should be between 4.5 Mohm and 12 Mohm.
  4. Switch "off" the set, and remove the wire between the two pins of the Mains/AC Power plug.
- Check the cabinet for defects, to avoid touching of any inner parts by the customer.

2.2 Warnings

- All ICs and many other semiconductors are susceptible to electrostatic discharges (ESD ⚠). Careless handling during repair can reduce life drastically. Make sure that, during repair, you are connected with the same potential as the mass of the set by a wristband with resistance. Keep components and tools also at this same potential. Available ESD protection equipment:
  – Complete kit ESD3 (small tablemat, wristband, connection box, extension cable and earth cable) 4822 310 10671.
  – Wristband tester 4822 344 13999.
- Be careful during measurements in the high voltage section.
- Never replace modules or other components while the unit is switched "on".
- When you align the set, use plastic rather than metal tools. This will prevent any short circuits and the danger of a circuit becoming unstable.

2.3 Notes

2.3.1 General

- Measure the voltages and waveforms with regard to the chassis (= tuner) ground (⏚), or hot ground (⏚), depending on the tested area of circuitry. The voltages and waveforms shown in the diagrams are indicative. Measure them in the Service Default Mode (see chapter 5) with a color bar signal and stereo sound (L: 3 kHz, R: 1 kHz unless stated otherwise) and picture carrier at 475.25 MHz for PAL, or 61.25 MHz for NTSC (channel 3).
- Where necessary, measure the waveforms and voltages with (⊓⊓) and without (⊼⊼) aerial signal. Measure the voltages in the power supply section both in normal operation (⏻) and in stand-by (⏻). These values are indicated by means of the appropriate symbols.
- The semiconductors indicated in the circuit diagram and in the parts lists, are interchangeable per position with the semiconductors in the unit, irrespective of the type indication on these semiconductors.
- Manufactured under license from Dolby Laboratories. “Dolby”, “Pro Logic” and the “double-D symbol”, are trademarks of Dolby Laboratories.

2.3.2 Schematic Notes

- All resistor values are in ohms and the value multiplier is often used to indicate the decimal point location (e.g. 2K2 indicates 2.2 kohm).
- Resistor values with no multiplier may be indicated with either an "E" or an "R" (e.g. 220E or 220R indicates 220 ohm).
- All capacitor values are given in micro-farads (μ= x10^{-6}), nano-farads (n= x10^{-9}), or pico-farads (p= x10^{-12}).
- Capacitor values may also use the value multiplier as the decimal point indication (e.g. 2p2 indicates 2.2 pF).
- An "asterisk" (*) indicates component usage varies. Refer to the diversity tables for the correct values.
- The correct component values are listed in the Spare Parts List. Therefore, always check this list when there is any doubt.

2.3.3 Rework on BGA (Ball Grid Array) ICs

General

Although (LF)BGA assembly yields are very high, there may still be a requirement for component rework. By rework, we mean the process of removing the component from the PWB and replacing it with a new component. If an (LF)BGA is removed from a PWB, the solder balls of the component are deformed drastically so the removed (LF)BGA has to be discarded.

Device Removal

As is the case with any component that, it is essential when removing an (LF)BGA, the board, tracks, solder lands, or surrounding components are not damaged. To remove an (LF)BGA, the board must be uniformly heated to a temperature close to the reflow soldering temperature. A uniform temperature reduces the chance of warping the PWB.
To do this, we recommend that the board is heated until it is certain that all the joints are molten. Then carefully pull the component off the board with a vacuum nozzle. For the appropriate temperature profiles, see the IC data sheet.

Area Preparation

When the component has been removed, the vacant IC area must be cleaned before replacing the (LF)BGA.
Removing an IC often leaves varying amounts of solder on the mounting lands. This excessive solder can be removed with either a solder sucker or solder wick. The remaining flux can be removed with a brush and cleaning agent.
After the board is properly cleaned and inspected, apply flux on the solder lands and on the connection balls of the (LF)BGA.
Note: Do not apply solder paste, as this has shown to result in problems during re-soldering.

Device Replacement
The last step in the repair process is to solder the new component on the board. Ideally, the (LF)BGA should be aligned under a microscope or magnifying glass. If this is not possible, try to align the (LF)BGA with any board markers. So as not to damage neighboring components, it may be necessary to reduce some temperatures and times.

More Information
For more information on how to handle BGA devices, visit this URL: *www.atyourservice.ce.philips.com* (needs subscription, not available for all regions). After login, select “Magazine”, then go to “Repair Downloads”. Here you will find Information on how to deal with BGA-ICs.

2.3.4 Lead Free Solder

Philips CE is producing lead-free sets (PBF) from 1.1.2005 onwards.

Identification: The bottom line of a type plate gives a 14-digit serial number. Digits 5 and 6 refer to the production year, digits 7 and 8 refer to production week (in example below it is 1991 week 18).

E_06532_024.eps
230205

Figure 2-1 Serial number example

Regardless of the special lead-free logo (which is not always indicated), one must treat all sets from this date onwards according to the rules as described below.

Figure 2-2 Lead-free logo

Due to lead-free technology some rules have to be respected by the workshop during a repair:
- Use only lead-free soldering tin Philips SAC305 with order code 0622 149 00106. If lead-free solder paste is required, please contact the manufacturer of your soldering equipment. In general, use of solder paste within workshops should be avoided because paste is not easy to store and to handle.
- Use only adequate solder tools applicable for lead-free soldering tin. The solder tool must be able
  - To reach at least a solder-tip temperature of 400°C.
  - To stabilize the adjusted temperature at the solder-tip.
  - To exchange solder-tips for different applications.
- Adjust your solder tool so that a temperature around 360°C - 380°C is reached and stabilized at the solder joint. Heating time of the solder-joint should not exceed ~ 4 sec. Avoid temperatures above 400°C, otherwise wear-out of tips will rise drastically and flux-fluid will be destroyed. To avoid wear-out of tips, switch “off” unused equipment or reduce heat.
- Mix of lead-free soldering tin/parts with leaded soldering tin/parts is possible but PHILIPS recommends strongly **to avoid** mixed regimes. If not to avoid, clean carefully the solder-joint from old tin and re-solder with new tin.
- Use only original spare-parts listed in the Service-Manuals. Not listed standard material (commodities) has to be purchased at external companies.
- Special information for lead-free BGA ICs: these ICs will be delivered in so-called "dry-packaging" to protect the IC against moisture. This packaging may only be opened short before it is used (soldered). Otherwise the body of the IC gets "wet" inside and during the heating time the structure of the IC will be destroyed due to high (steam-)pressure inside the body. If the packaging was opened before usage, the IC has to be heated up for some hours (around 90°C) for drying (think of ESD-protection!).
  Do not re-use BGAs at all!
- For sets produced before 1.1.2005, containing leaded soldering tin and components, all needed spare parts will be available till the end of the service period. For the repair of such sets nothing changes.

In case of doubt whether the board is lead-free or not (or with mixed technologies), you can use the following method:
- Always use the highest temperature to solder, when using SAC305 (see also instructions below).
- De-solder thoroughly (clean solder joints to avoid mix of two alloys).

Caution: For BGA-ICs, you **must** use the correct temperature-profile, which is coupled to the 12NC. For an overview of these profiles, visit the website *www.atyourservice.ce.philips.com* (needs subscription, but is not available for all regions)
You will find this and more technical information within the "Magazine", chapter "Repair Downloads".
For additional questions please contact your local repair help desk.

2.3.5 Practical Service Precautions

- **It makes sense to avoid exposure to electrical shock.** While some sources are expected to have a possible dangerous impact, others of quite high potential are of limited current and are sometimes held in less regard.
- **Always respect voltages**. While some may not be dangerous in themselves, they can cause unexpected reactions that are best avoided. Before reaching into a powered TV set, it is best to test the high voltage insulation. It is easy to do, and is a good service precaution.

3. Directions for Use

You can download this information from the following websites:
http://www.philips.com/support
http://www.p4c.philips.com

3.1 Hotel Mode

3.1.1 Introduction

As the 26" version of the EL1.1U AA chassis is equipped with Hotel Mode, here is a brief explanation on how to activate and configure it.

3.1.2 The Benefits of Hotel Mode

This TV is specially designed to operate in Hotel Mode. Hotel Mode offers the following benefits:

- Access to the user menu can be blocked. This prevents users (e.g. guests) from deleting or changing channel settings and/or modifying picture and sound settings. Picture and sound can only be controlled via pre-programmed Smart Settings and buttons on the remote control. This ensures that TVs are always set up correctly.
- A switch-on volume and channel can be selected. After switching on, the TV will always start on the specified channel and volume level.
- The maximum volume can be limited in order to prevent disturbance.
- Channels can be blanked.
- The television keys VOLUME +/-, CHANNEL +/- and MENU can be blocked.
- Screen information can be suppressed.

3.1.3 Activating the Hotel Mode Setup Menu

1. Switch on the television and select a TV channel.
2. On the remote control, press keys: [3, 1, 9, 7, 5, 3, MUTE]
3. The HOTEL MODE SETUP MENU becomes visible.
4. Use the cursor keys to select and change any of the functions.
5. Select "STORE" and press [CURSOR RIGHT] to save the settings and exit Hotel Mode setup. Press [MENU] to exit without saving.

3.1.4 Hotel Mode Functions

This section describes the functionality of the menu items in the Hotel Mode Setup menu.

HOTEL MODE

Selection	Description
YES	Hotel Mode is ON: - The user menu is blocked. - The volume level is limited (to the volume level when Hotel Mode Setup was entered). - All settings of the Hotel Mode Setup menu are in effect.
NO	Hotel Mode is OFF: - The TV operates as a normal consumer TV.
INSTALL	Allows the TV Set to auto-install without PSIP activated (if PSIP is set to NO)

ON CHANNEL

Selection	Description
0 .. 99, EXT1,2,3	When the user switches the TV ON, it will tune to the specified channel or External AV.

CHANNEL BLANK

Selection	Description
YES	The current channel is blanked.
NO	The current channel is not blanked (normal visible; DEFAULT value)

CHANNEL BLANK can be set for every channel. Use [CH+ / CH-] to visit all the channels and set the desired status per channel. The channel number is visible in the top left corner.

KEYBOARD LOCK

Selection	Description
YES	The television keys VOLUME +/-, CHANNEL +/- and MENU are blocked.
NO	The television keys VOLUME +/-, CHANNEL +/- and MENU function normally.

MAX VOLUME

Selection	Description
0 .. 99	The TV Volume will not exceed the selected volume level.

ON VOLUME

Selection	Description
0 .. 99	When the user switches the TV ON, it will play at the specified volume level. **Note:** "ON VOLUME" cannot exceed the MAXIMUM VOLUME level.

OSD DISPLAY

Selection	Description
YES	Normal screen information is displayed (example: channel information).
NO	On Screen Display can be suppressed (except for some VGA input, if present).

MONITOR OUT

Selection	Description
YES	Enables Audio & Video output from the TV.
NO	Disables Audio & Video output from TV

POWER ON

Selection	Description
FORCED	Sets the TV immediately to ON after the mains power is connected.
STANDBY	Sets the TV to standby mode after the mains power is connected.

PSIP

Selection	Description
YES	Enables recognition of PSIP settings (during installation).
NO	Disables recognition of PSIP settings (during installation).

4. Mechanical Instructions

Index of this chapter:

4.1 Cable Dressing
4.2 Service Positions
4.3 Assy/Panel Removal
4.4 Set Re-assembly

Notes:

- Several models in this chassis range have a different mechanical construction, the instructions given in this chapter are therefore very model specific.
- Figures below can deviate slightly from the actual situation, due to the different set executions.
- Follow the disassemble instructions in described order.

4.1 Cable Dressing

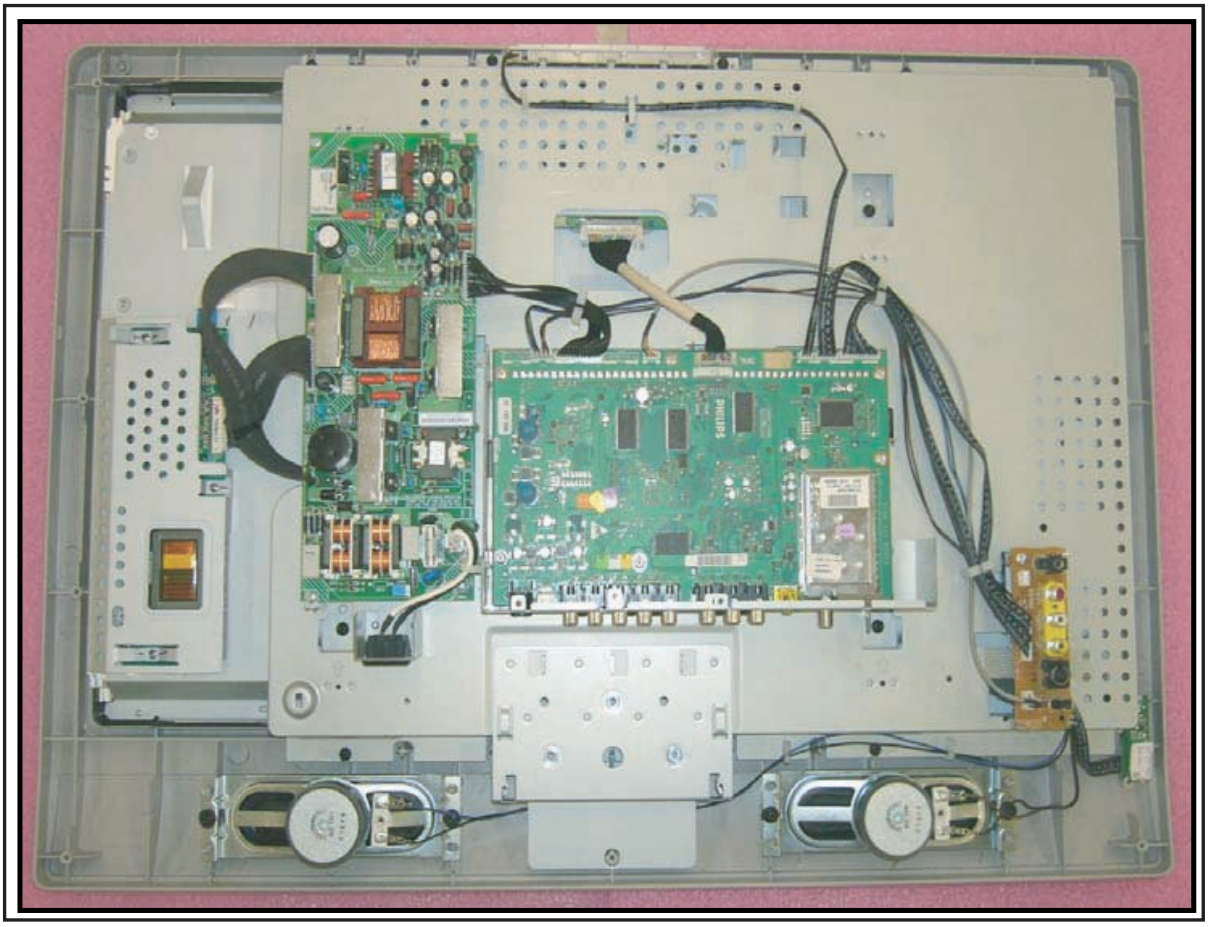

G_16290_089.eps
030206

Figure 4-1 Cable dressing (26-inch model)

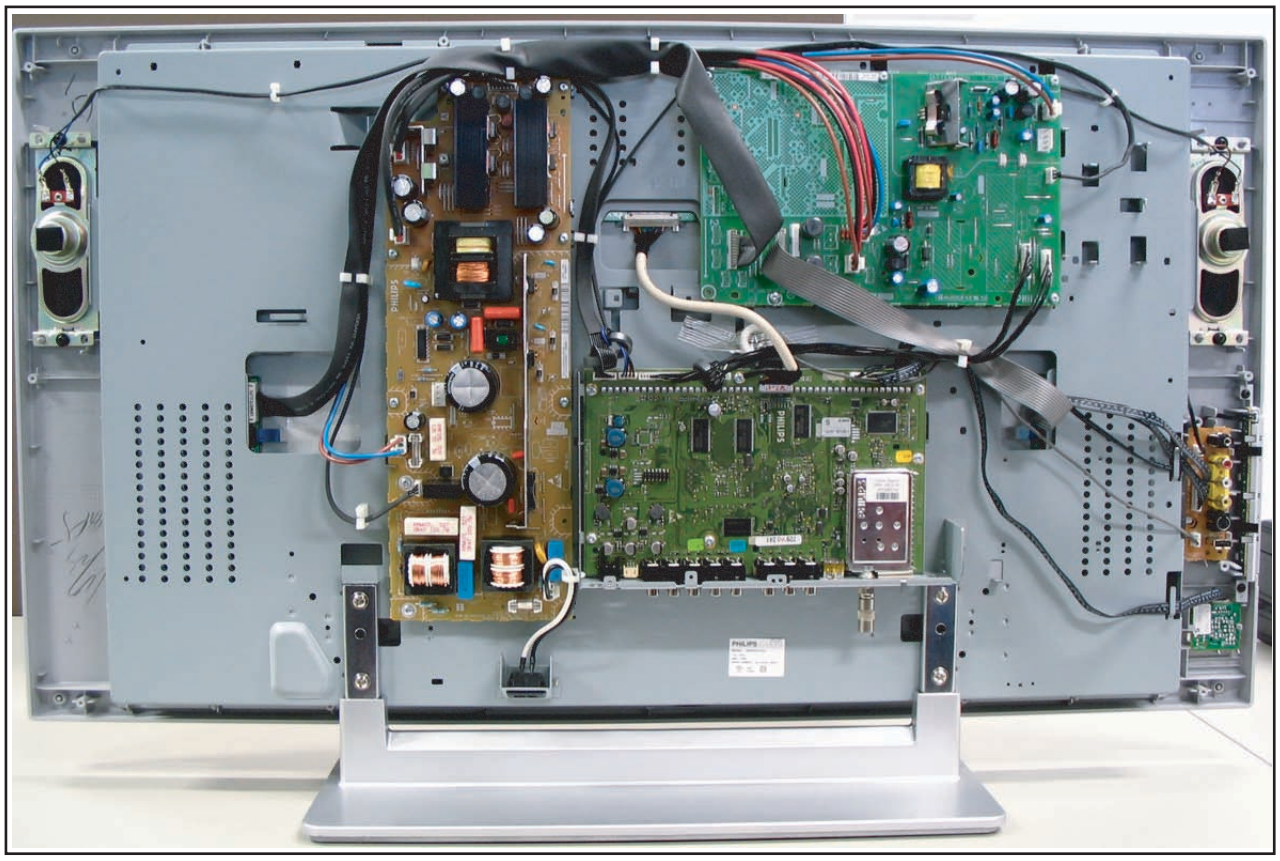

G_16290_070.eps
310106

Figure 4-2 Cable dressing (32-inch model)

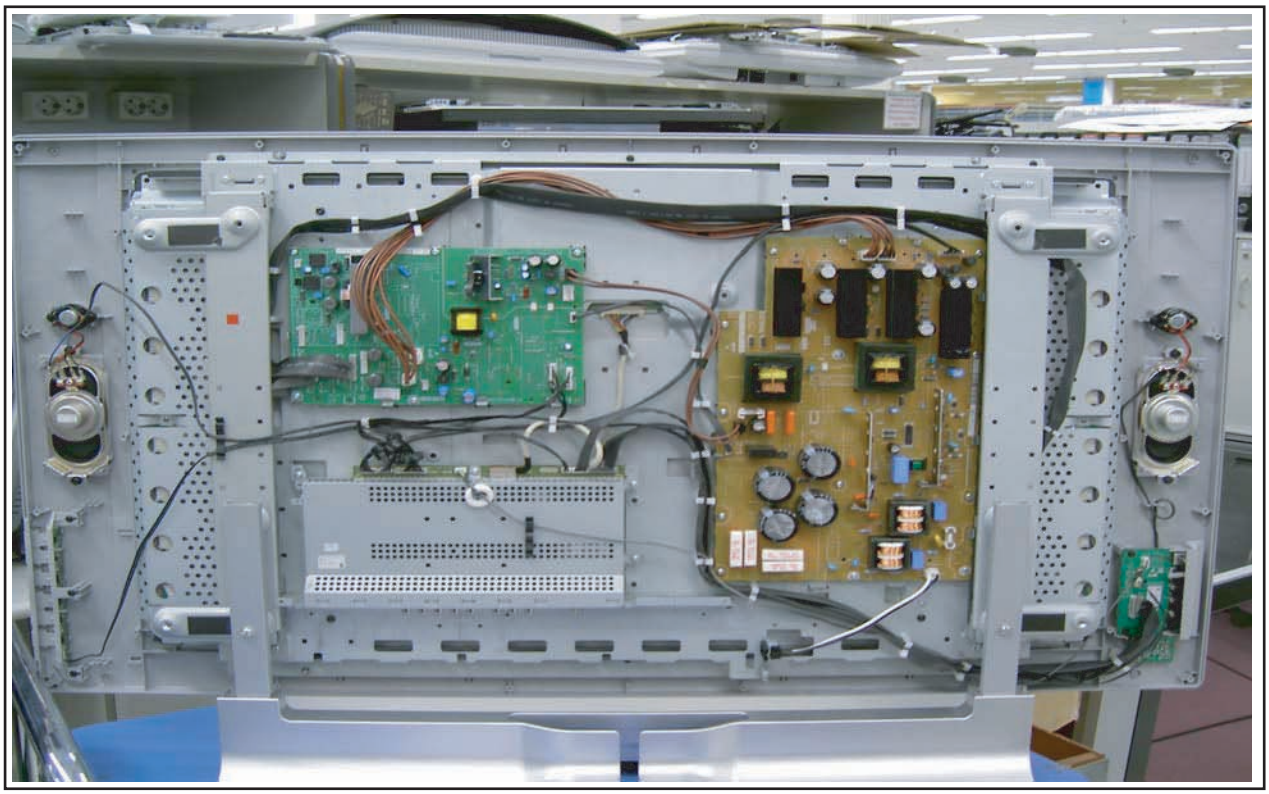

G_16290_091.eps
030206

Figure 4-3 Cable dressing (37-inch model)

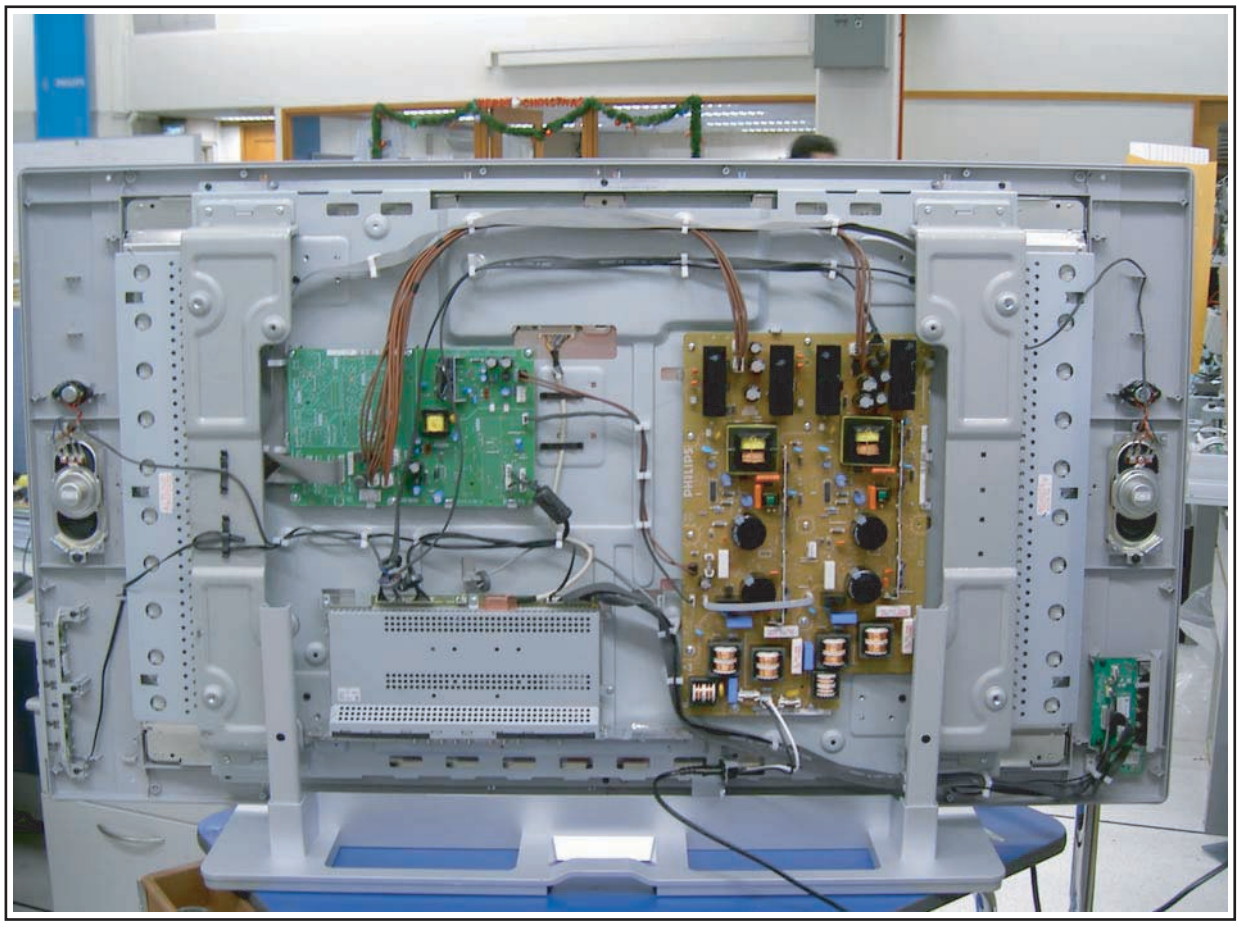

G_16290_092.eps
030206

Figure 4-4 Cable dressing (42-inch model)

4.2 Service Positions

For easy servicing of this set, there are a few possibilities created:

- Foam bars (created for Service).
- Aluminium service stands (created for Service).

4.2.1 Foam Bars

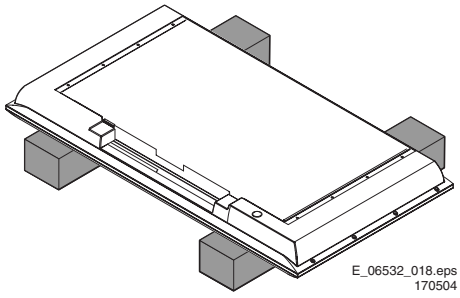

E_06532_018.eps
170504

Figure 4-5 Foam bars

The foam bars (order code 3122 785 90580 for two pieces) can be used for all types and sizes of Flat TVs. By laying the TV face down on the (ESD protective) foam bars, a stable situation is created to perform measurements and alignments.
By placing a mirror under the TV, you can monitor the screen.

4.2.2 Aluminium Stands

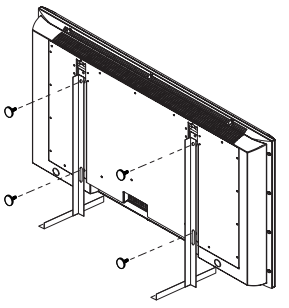

E_06532_019.eps
170504

Figure 4-6 Aluminium stands (drawing of MkI)

The new MkII aluminium stands (not on drawing) with order code 3122 785 90690, can also be used to do measurements, alignments, and duration tests. The stands can be (dis)mounted quick and easy by means of sliding them in/out the "mushrooms". The new stands are backwards compatible with the earlier models.
Important: For (older) FTV sets without these "mushrooms", it is obligatory to use the provided screws, otherwise it is possible to damage the monitor inside!.

4.3 Assy/Panel Removal

4.3.1 Rear Cover

Warning: Disconnect the mains power cord before you remove the rear cover.

1. Place the TV set upside down on a table top, using the foam bars (see part "Foam Bars").
   Caution: do **not** put pressure on the display, but let the monitor lean on the speakers or the Front cover.
2. Remove all screws that secure the rear cover.
3. Lift the rear cover from the cabinet cautiously. Make sure that wires and other internal components are not damaged during cover removal.

4.3.2 Keyboard Control Panel

1. Remove the screws [1] that secure the panel.
2. Disconnect the cable [2] from the panel.
3. Remove the panel.

When defective, replace the whole unit.

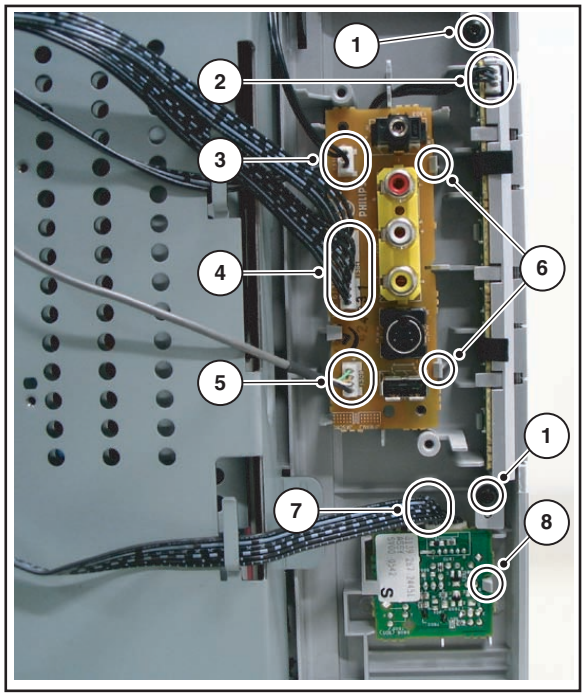

G_16290_071.eps
310106

Figure 4-7 Keyboard Control panel, Side I/O panel and LED panel.

4.3.3 Side I/O Panel

1. Disconnect the cables [3][4][5] from the panel.
2. Remove the panel from its brackets [6].

When defective, replace the whole unit.

4.3.4 LED Panel

1. Disconnect the cable [7] from the panel.
2. Remove the panel from its bracket [8].

When defective, replace the whole unit.

4.3.5 Speakers

After removal of the rear cover, you can access the speakers.

4.3.6 Stand-by Power Supply/Audio Amplifier Panel (if present)

1. Disconnect all cables [1] from the panel.
2. Remove the fixation screws [2] from the panel. The positioning might differ from the locations as indicated in Figure “Stand-by/Audio panel”.
3. Take the panel out of its brackets (it hinges at the bottom side).

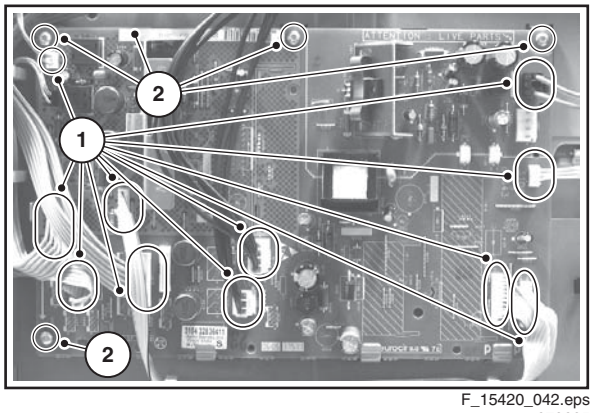

F_15420_042.eps
070605

Figure 4-8 Stand-by/Audio panel

4.3.7 LCD Supply Panel

1. Disconnect all cables [1] from the panel.
2. Remove the fixation screws [2] from the panel.
3. Take the panel out of its brackets (it hinges on the right side).

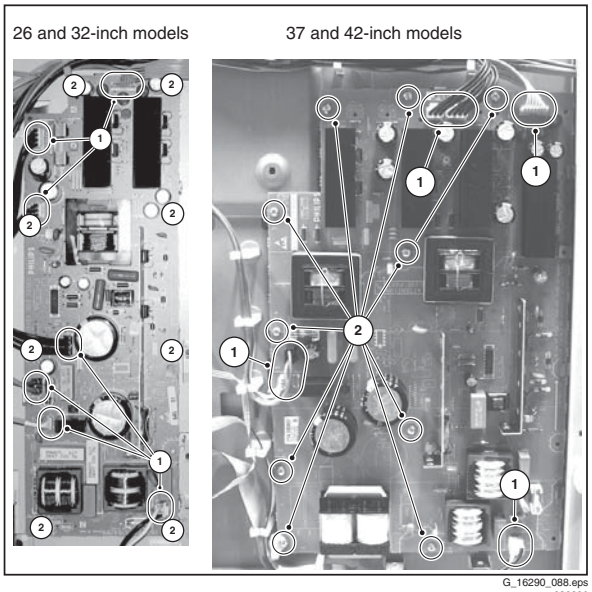

G_16290_088.eps
030206

Figure 4-9 LCD supply panel(s)

4.3.8 Small Signal Board (SSB)

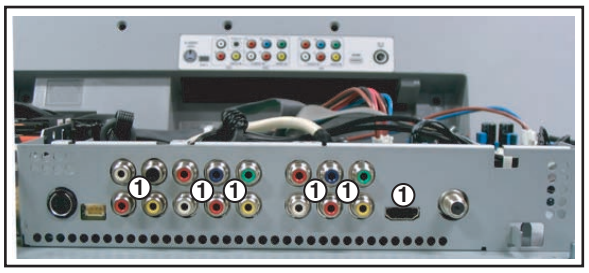

G_16290_072.eps
310106

Figure 4-10 SSB bottom shielding

1. Remove the connector fixation screws [1] at the connector plate (bottom side, see Figure “SSB bottom shielding”).
2. Unplug the LVDS connector [1] on the SSB (SSB top side, see Figure “SSB top view”). Be careful as it is very fragile.
3. Unplug all other cables on the SSB.
4. Remove the mounting screws [2] that hold the SSB, and lift the panel from the set.

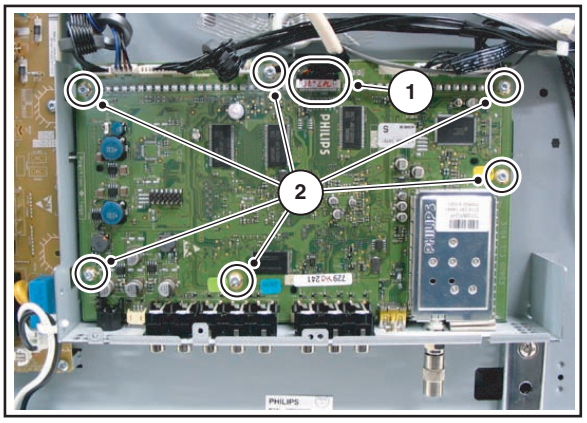

G_16290_073.eps
310106

Figure 4-11 SSB top view

4.3.9 LCD Panel

To remove the LCD-panel, carry out the following steps:

1. Disconnect the cables from the “L” and the “R” loudspeakers.
2. **Important:** Unplug the LVDS connector [1] on the LCD panel (see Figure “LVDS connector”). Be careful, as this is a very fragile connector!
3. Take the Side I/O panel and the LED panel out of its brackets (see Figure “Keyboard Control panel, Side I/O panel and LED panel” at the beginning of this chapter).
4. Unplug the cable from the Keyboard Control panel and remove this cable from its cable clamp (see Figure “Keyboard Control panel, Side I/O panel and LED panel” at the beginning of this chapter).
5. Unplug the LCD backlight connectors [2] of the LCD panel (see Figure “Fixation screws and LCD backlight connectors”).
6. Remove the Stand-by Power Supply/Audio Amplifier Panel as described previously in this chapter, because of a hidden screw.
7. Remove the panel fixation screws and at the same time disconnect the remaining cable connected to the Side I/O panel (see Figure “Fixation screws and LCD backlight connectors”).
8. Remove the LCD panel fixation screws [1]. See Figure “Location of LCD panel fixation screws”.
9. Lift the metal frame (together with all PWBs) from the LCD panel.

Take care not to damage the fragile LVDS cable. Ensure that the conducting tape [1] at both sides of the panel is secured for re-assembly (see Figure “Conducting tape”).

10. After removal of the metal frame, you can lift the LCD panel from the front cabinet.

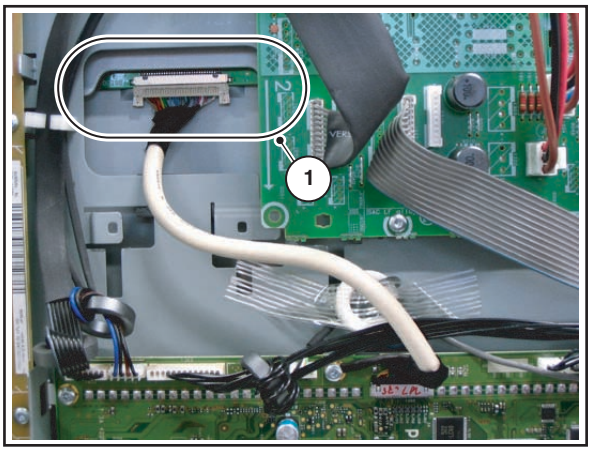

G_16290_074.eps
310106

Figure 4-12 LVDS connector

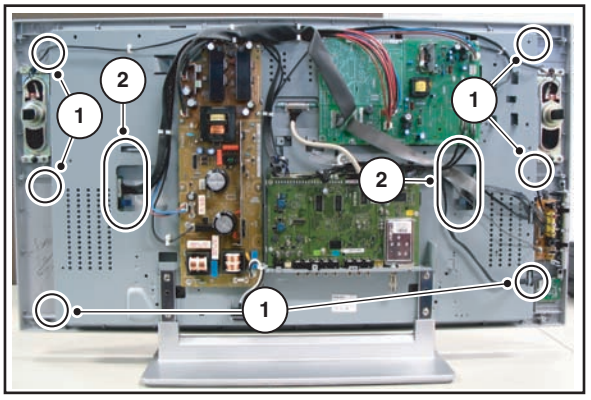

G_16290_075.eps
310106

Figure 4-13 Fixation screws and LCD backlight connectors

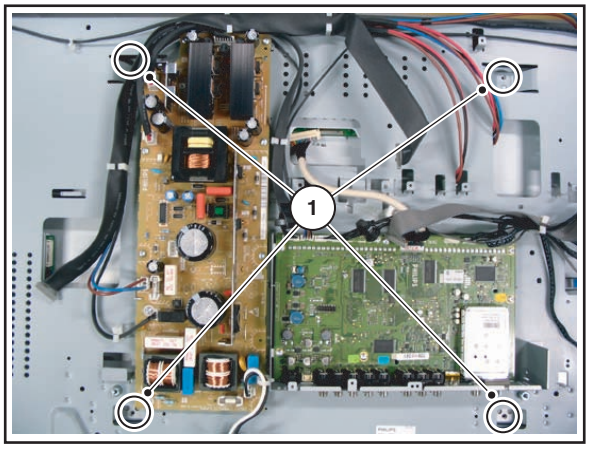

G_16290_076.eps
310106

Figure 4-14 Location of LCD panel fixation screws

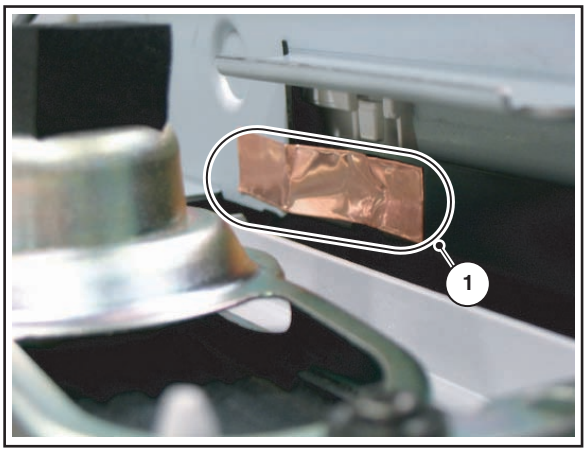

G_16290_077.eps
310106

Figure 4-15 Conductive tape

4.4 Set Re-assembly

To re-assemble the whole set, execute all processes in reverse order.

Notes:

- While re-assembling, make sure that all cables are placed and connected in their original position. See Figure "Cable dressing".
- Ensure that the conducting tape [1] at both sides of the LCD panel is placed in its original position. See Figure “Conductive tape”.

5. Service Modes, Error Codes, and Fault Finding

Index of this chapter:

5.1 Test Points
5.2 Service Modes
5.3 Stepwise Start-up
5.4 Service Tools
5.5 Error Codes
5.6 The Blinking LED Procedure
5.7 Protections
5.8 Fault Finding and Repair Tips
5.9 Software Upgrading

5.1 Test Points

As most signals are digital, it will be almost impossible to measure waveforms with a standard oscilloscope. Therefore, waveforms are not given in this manual. Several key ICs are capable of generating test patterns, which can be controlled via ComPair. In this way it is possible to determine which part is defective.

Perform measurements under the following conditions:
- Service Default Mode.
- Video: Color bar signal.
- Audio: 3 kHz left, 1 kHz right.

5.2 Service Modes

Service Default Mode (SDM) and Service Alignment Mode (SAM) offer several features for the service technician, while the Customer Service Mode (CSM) is used for communication between a Customer Helpdesk and a customer.

There is also the option of using ComPair, a hardware interface between a computer (see requirements below) and the TV chassis. It offers the ability of structured troubleshooting, test pattern generation, error code reading, software version readout, and software upgrading.

Minimum requirements for ComPair: a Pentium processor, Windows 95/98, and a CD-ROM drive (see also paragraph “ComPair”).

Remark: as the Hotel Mode is a User Mode, rather than a Service Mode, we have put the description in Chapter 3, Directions for Use.

5.2.1 Service Default Mode (SDM)

Purpose
- To create a pre-defined setting, to get the same measurement results as given in this manual.
- To override SW protections (only applicable for protections detected by stand-by processor) and make the TV start up to the step just before protection (a sort of automatic stepwise start up). See paragraph “Stepwise Start Up”.
- To start the blinking LED procedure (not valid in protection mode).

Specifications

Table 5-1 SDM default settings

Region	Freq. (MHz)	Default system
Europe, AP-PAL/Multi	475.25	PAL B/G
NAFTA, AP-NTSC, LATAM	61.25 (ch. 3)	NTSC M

- Tuning frequency 61.25 MHz for NTSC: The TV shall tune to physical channel 3 only if channel 3 is an analog channel or if there is no channel 3 installed in the channel map. If there is a digital channel installed in channel 3, then the frequency to which the set will tune, would be as specified in the channel map and could be different from the one corresponding to the physical channel 3.
- All picture settings at 50% (brightness, color, contrast).
- All sound settings at 50%, except volume at 25%.
- All service-unfriendly modes (if present) are disabled, like:
  - (Sleep) timer.
  - Child/parental lock.
  - Picture mute (blue mute or black mute).
  - Automatic volume levelling (AVL).
  - Auto switch "off" (when no video signal was received for 10 minutes).
  - Skip/blank of non-favorite pre-sets.
  - Smart modes.
  - Auto store of personal presets.
  - Auto user menu time-out.

How to Activate SDM

Use one of the following methods:
- Use the standard RC-transmitter and key in the code “062596”, directly followed by the “MENU” button.
  Note: It is possible that, together with the SDM, the main menu will appear. To switch it "off", push the “MENU” button again.
- Short for a moment the two solder pads [1] on the SSB, with the indication “SDM”. They are located on top of the SSB. Activation can be performed in all modes, except when the set has a problem with the Stand-by Processor. See figure “SDM and SPI service pads”.

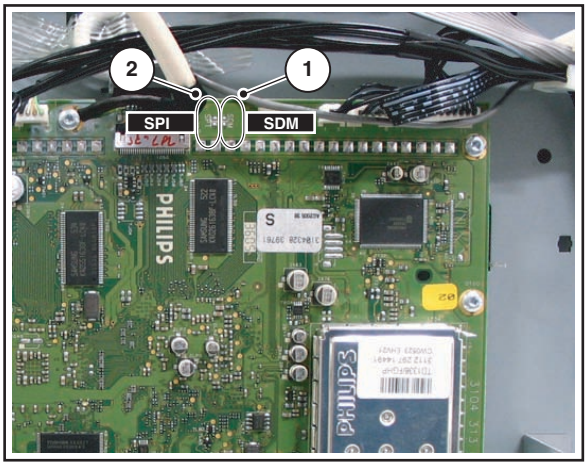

G_16300_001.eps
020206

Figure 5-1 SDM and SPI service pads

After activating this mode, “SDM” will appear in the upper right corner of the screen (if you have picture).

How to Navigate

When you press the “MENU” button on the RC transmitter, the set will toggle between the SDM and the normal user menu (with the SDM mode still active in the background).

How to Exit SDM

Use one of the following methods:
- Switch the set to STAND-BY via the RC-transmitter.
- Via a standard customer RC-transmitter: key in “00”-sequence.

5.2.2 Service Alignment Mode (SAM)

Purpose

- To perform (software) alignments.
- To change option settings.
- To easily identify the used software version.
- To view operation hours.
- To display (or clear) the error code buffer.

How to Activate SAM

Via a standard RC transmitter: key in the code "062596" directly followed by the "INFO" button. After activating SAM with this method a service warning will appear on the screen, you can continue by pressing the red button on the RC.

Contents of SAM:

- **Hardware Info.**
  - **A. VIPER SW Version.** Displays the software version of the VIPER software (main software) (**example:** EL23U-1.2.3.4_12345 = AAAAB_X.Y.W.Z_NNNNN).
    - **AAAA**= the chassis name.
    - **B**= the region: A= AP, E= EU, L= Latam, U = US.
    - **X.Y.W.Z**= the software version, where X is the main version number (different numbers are not compatible with one another) and Y is the sub version number (a higher number is always compatible with a lower number). The last two digits are used for development reasons only, so they will always be zero in official releases.
    - **NNNNN**= last five digits of 12nc code of the software.
  - **B. SBY PROC Version.** Displays the software version of the stand-by processor.
  - **C. Production Code**. Displays the production code of the TV, this is the serial number as printed on the back of the TV set. Note that if an NVM is replaced or is initialized after corruption, this production code has to be re-written to NVM. ComPair will foresee in a possibility to do this.
- **Operation Hours.** Displays the accumulated total of operation hours (not the stand-by hours). Every time the TV is switched "on/off", 0.5 hours is added to this number.
- **Errors.** (Followed by maximal 10 errors). The most recent error is displayed at the upper left (for an error explanation see paragraph "Error Codes").
- **Defective Module.** Here the module that generates the error is displayed. If there are multiple errors in the buffer, which are not all generated by a single module, there is probably another defect. It will then display the message "UNKNOWN" here.
- **Reset Error Buffer.** When you press "cursor right" and then the "OK" button, the error buffer is reset.
- **Alignments.** This will activate the "ALIGNMENTS" sub-menu.
- **Dealer Options.** Extra features for the dealers.
- **Options.** Extra features for Service.
- **Initialize NVM.** When an NVM was corrupted (or replaced) in the former EMG based chassis, the microprocessor replaces the content with default data (to assure that the set can operate). However, all preferences and alignment values are gone now, and option numbers are not correct. Therefore, this was a very drastic way. In this chassis, the procedure is implemented in another way: The moment the processor recognizes a corrupted NVM, the "initialize NVM" line will be highlighted. Now, you can do two things (dependent of the service instructions at that moment):
  - Save the content of the NVM via ComPair for development analysis, **before** initializing. This will give the Service department an extra possibility for diagnosis (e.g. when Development asks for this).
  - Initialize the NVM (same as in the past, however now it happens conscious).

Note: When you have a corrupted NVM, or you have replaced the NVM, there is a high possibility that you will not have picture any more because your display option is not correct. So, before you can initialize your NVM via the SAM, you need to have a picture and therefore you need the correct display option. To adapt this option, use ComPair. The correct HEX values for the options can be found in the table below.

Table 5-2 Display option code overview (all FTV chassis)

Display Option (Dec.)	Technology	Display Make & Type	Size	Vertical Resolution	Horizontal Resolution	Code number	12NC
000	PDP	SDI V3	42”	768p	1024	S42AX-YD01(PP42AX-007A)	9322 225 38682
001	PDP	SDI V3	50”	768p	1366	S50HW-XD03	9322 215 26682
002	PDP	FHP A1	42”	1024i	1024	FPF42C128128UC-52 (A1)	9322 212 78682
003	LCD	LPL A3	30”	768p	1280	LC300W01-A3P7	9322 198 00682
004	LCD	LPL A6	37”	768p	1366	LC370W01-A6	9322 220 87682
005	LCD	LPL A6	42”	768p	1366	LC420W02-A6	9322 226 39682
006	LCD	Sharp	32”	768p	1366	LQ315T3LZ13 (ASV1)	9322 209 35682
						LQ315T3LZ23 (ASV2.2)(5Vtcon)	9322 226 58682
						LQ315T3LZ23 (ASV2.2)(12Vtcon)	9322 226 16682
007	PDP	SDI V3	42”	480p	852	S42SD-YD05 (V3)	9322 215 27682
008	PDP	FHP A1	37”	1024i	1024	FPF37C128128UB-72	9322 217 56682
009	LCOS XION	-	-	720p	1280	n.a.	n.a.
010	LCD	AUO	30”	768p	1280	T296XW01	9322 206 49682
						T296XW01V2	9322 219 45682
						T296XW01V3	9322 213 33682
011	LCD	LPL A6	32”	768p	1366	LC320W01-A6K1	9322 217 44682
012	LCD	AUO V0.1	32”	768p	1366	T315XW01V5	9322 231 69682
013	LCD	Sharp	37”	768p	1366	LQ370T3LZ21 (ASV2)	
						LQ370T3LZ44 (ASV2.2)	?
014	LCD	LPL SL01	42”	1080p	1920	LC420WU1-SL01	9322 228 99682
015	PDP	SDI	37”	480p	852	S37SD-YD02	9322 217 39682
016	PDP	FHP	37”	1080i	1024	not used	not used
017	PDP	FHP	42”	1080i	1024	FPF42C128135UA-52	9322 235 43682
018	PDP	FHP	55”	768p	1366	not used	not used
019	LCOS VENUS	-	-	720p	1280	n.a.	n.a.
020	LCOS VENUS	-	-	1080p	1920	n.a.	n.a.
021	LCD	LPL SL01	26”	768p	1366	LC260WX2-SL01	9322 221 01682
022	LCD	LPL SL01	32”	768p	1366	LC320WX2-SL01	9322 241 46682
023	PDP	LGE	42”	480p	852	not used	not used
024	PDP	SDI V4	42”	480p	852	S42SD-YD07(PP42SD-015A) (V4)	9322 226 37682
						S42SD-YD07(PP42SD-015B) (V4)	9322 226 96682
						S42SD-YD07(PP42SD-015F) (V4)	9322 233 81682
025	PDP	SDI V5	42”	768p	1024	S42AX-YD01(PP42AX-007A) (V4)	9322 225 38682
						S42AX-YD01(PP42AX-008A) (V4)	9322 226 95682
						S42AX-YD01(PP42AX-008B) (V4)	9322 233 80682
						S42AX-YD02(PP42AX-009A) (W1)	9322 240 08682
026	PDP	FHP A2	42”	1024i	1024	FPF42C128128UD-51 (A2)	not used
027	PDP	SDI V5	50”	768p	1366	S50HW-XD04(PP50HW-005A) (V4)	9322 226 54682
						S50HW-XD04(PP50HW-005B) (V4)	9322 226 97682
						S50HW-XD04(PP50HW-005E) (V4)	9322 233 79682
						S50HW-YD01(PP50HW-010A) (W1)	9322 240 25682
028	LCD	Sharp	37”	1080p	1920	LQ370D3LZ13 (ASV2.2)	9322 228 48682
029	LCD	AUO V0.1	32”	768p	1366	T315XW01-V3	see partslist for 12NC
030	LCD	Sharp	37”	1080p	1920	LW370D3LZ1x (ASV 3 first samples)	not used
031	LCD	Sharp	37”	1080p	1920	LK370D3LZ33 (ASV 3)	9322 242 22682
032	LCD	LPL SL0.1	20”	768p	1366	LC200WX1-SL01	9322 222 90682
033	LCD	QDI	23”	768p	1366	QD23HL02 REV01	9322 223 91682
						QD23HL02 REV01(03)	9322 232 69682
034	ECO PTV	-	51”	1080i	1366	ASSY OPTICAL 51W 2K5	3139 177 92811
						ASSY OPTICAL 51W 2K6	3139 177 95871
035	ECO PTV	-	55”	1080i	1366	not used	not used
036	ECO PTV	-	61”	1080i	1366	not used	not used
037	PDP	FHP A3	42”	1024i	1024	FPF42C128135UA-52 (A3)	9322 235 43682
038	DLP	-	50”	720p	1280	not used	not used
039	DLP	-	60”	720p	1280	ASSY OPTICAL 60W 2K5	3139 177 93521
						ASSY OPTICAL 60W 2K6	3139 177 96911
040	LCD	Sharp 2.3	32”	768p	1366	LK315T3LZ43 (ASV 2.3)	9322 235 32682
041	LCD	LPL SLA1	42”	768p	1366	LC420WX2-SLA1	9322 240 80682
042	PDP	SDI V4	63”	768p	1366	S63HW-XD04	see partslist for 12NC
043	LCD	Sharp 3.0	37”	768p	1366	LK370T3LZ63 (ASV 3)	see partslist for 12NC
044	LCD	Sharp 2.3	37”	768p	1366	LK370T3LZ53 (ASV 2.3)	9322 235 83682
045	LCD	LPL SLB2	26”	768p	1366	LC260WX2-SLB2	9322 234 13682
046	LCD	LPL SL06	32”	768p	1366	LC320W01-SL06	9322 230 03682
047	LCD	LPL SLB1	42”	768p	1366	LC420W02-SLB1	9322 234 12682
048	LCD	QDI	26”	768p	1366	QD26HL02-REV01	9322 227 29682
						QD26HL02-REV02	9322 235 05682
049	LCD	AUO	26”	768p	1366	T260XW02V4	9322 231 90682
050	LCD	AUO V9	32”	768p	1366	T315XW01V9	9322 231 89682
051	LCD	AUO	37”	768p	1366	T370XW01V1	9322 233 78682
052	LCD	AUO V5	32”	768p	1366	T315XW02V5	see partslist for 12NC
053	LCD	LPL SL04	37”	768p	1366	LC370WX1-SL04	9322 233 19682
054	PDP	LGE	42”	768p	1024	PDP42X3	see partslist for 12NC

- **Store.** All options and alignments are stored when pressing “cursor right” and then the “OK”-button
- **SW Maintenance.**
  - **SW Events.** Not useful for service purposes. In case of specific software problems, the development department can ask for this info.

– **HW Events.** Not functional at the moment this manual is released, description will be published in an update manual if the function becomes available.

How to Navigate

- In SAM, you can select the menu items with the “CURSOR UP/DOWN” key on the RC-transmitter. The selected item will be highlighted. When not all menu items fit on the screen, move the “CURSOR UP/DOWN” key to display the next/previous menu items.
- With the “CURSOR LEFT/RIGHT” keys, it is possible to:
  – (De) activate the selected menu item.
  – (De) activate the selected submenu.

How to Exit SAM

Use one of the following methods:

- Press the “MENU” button on the RC-transmitter.
- Switch the set to STAND-BY via the RC-transmitter.

Note: As long as SAM is activated, it is not possible to change a channel. This could hamper the White Point alignments because you cannot choose your channel/frequency any more. Workaround: after you have sent the RC code “062596 INFO” you will see the service-warning screen, and in this stage it is still possible to change the channel (so before pressing the “OK” button).

5.2.3 Customer Service Mode (CSM)

Purpose

When a customer is having problems with his TV-set, he can call his dealer or the Customer Helpdesk. The service technician can then ask the customer to activate the CSM, in order to identify the status of the set. Now, the service technician can judge the severity of the complaint. In many cases, he can advise the customer how to solve the problem, or he can decide if it is necessary to visit the customer.
The CSM is a read only mode; therefore, modifications in this mode are not possible.

How to Activate CSM

Key in the code “123654” via the standard RC transmitter.

Note: Activation of the CSM is only possible if there is no (user) menu on the screen!

How to Navigate

By means of the “CURSOR-DOWN/UP” knob on the RC-transmitter, you can navigate through the menus.

Contents of CSM

- **SW Version (example:** EL23U-1.2.3.4_12345**).** Displays the built-in main software version. In case of field problems related to software, software can be upgraded. As this software is consumer upgradable, it will also be published on the Internet.
- **SBY Processor Version.** Displays the built-in stand-by processor software version. Upgrading this software will be possible via a PC and a ComPair interface (see chapter Software upgrade).
- **Set Type.** This information is very helpful for a helpdesk/ workshop as reference for further diagnosis. In this way, it is not necessary for the customer to look at the rear of the TV-set. Note that if an NVM is replaced or is initialized after corruption, this set type has to be re-written to NVM. ComPair will foresee a possibility to do this.
- **Production Code.** Displays the production code (the serial number) of the TV. Note that if an NVM is replaced or is initialized after corruption, this production code has to be re-written to NVM. ComPair will foresee a possibility to do this.
- **Code 1.** Gives the latest five errors of the error buffer. As soon as the built-in diagnose software has detected an error the buffer is adapted. The last occurred error is displayed on the leftmost position. Each error code is displayed as a 2-digit number. When less than 10 errors occur, the rest of the buffer is empty (00). See also paragraph Error Codes for a description.
- **Code 2.** Gives the first five errors of the error buffer. See also paragraph Error Codes for a description.
- **Headphone Volume.** Gives the last status of the headphone volume, as set by the customer. The value can vary from 0 (volume is minimum) to 100 (volume is maximum). Change via ”MENU”, “TV”, “SOUND”, “HEADPHONE VOLUME”.
- **Dolby.** Indicates whether the received transmitter transmits Dolby sound (“ON”) or not (“OFF”). Attention: The presence of Dolby can only be tested by the software on the Dolby Signaling bit. If a Dolby transmission is received without a Dolby Signaling bit, this indicator will show “OFF” even though a Dolby transmission is received.
- **Sound Mode.** Indicates the by the customer selected sound mode (or automatically chosen mode). Possible values are “STEREO” and “VIRTUAL DOLBY SURROUND”. Change via “MENU”, “TV”, “SOUND”, “SOUND MODE”. It can also have been selected automatically by signaling bits (internal software).
- **Tuner Frequency.** Not applicable for US sets.
- **Digital Processing.** Indicates the selected digital mode. Possible values are “STANDARD” and “PIXEL PLUS”. Change via “MENU”, “TV”, “PICTURE”, “DIGITAL PROCESSING”.
- **TV System.** Gives information about the video system of the selected transmitter.
  – M: NTSC M signal received
  – ATSC: ATSC signal received
- **Center Mode.** Not applicable.
- **DNR.** Gives the selected DNR setting (Dynamic Noise Reduction), “OFF”, “MINIMUM”, “MEDIUM”, or “MAXIMUM”. Change via “MENU”, “TV”, “PICTURE”, “DNR”
- **Noise Figure.** Gives the noise ratio for the selected transmitter. This value can vary from 0 (good signal) to 127 (average signal) and to 255 (bad signal). For some software versions, the noise figure will only be valid when “Active Control” is set to “medium” or “maximum” before activating CSM.
- **Source.** Indicates which source is used and the video/ audio signal quality of the selected source. (Example: Tuner, Video/NICAM) Source: “TUNER”, “AV1”, “AV2”, “AV3”, “HDMI 1”, “SIDE”. Video signal quality: “VIDEO”, “S-VIDEO”, “RGB 1FH”, “YPBPR 1FH 480P”, “YPBPR 1FH 576P”, “YPBPR 1FH 1080I”, “YPBPR 2FH 480P”, “YPBPR 2FH 576P”, “YPBPR 2FH 1080I”, “RGB 2FH 480P”, “RGB 2FH 576P” or “RGB 2FH 1080I”. Audio signal quality: “STEREO”, “SPDIF 1”, “SPDIF 2”, or “SPDIF”.
- **Audio System.** Gives information about the audible audio system. Possible values are “Stereo”, ”Mono”, “Mono selected”, “Analog In: No Dig. Audio”, “Dolby Digital 1+1”, “Dolby Digital 1/0”, “Dolby Digital 2/0”, “Dolby Digital 2/1”, “Dolby Digital 2/2”, “Dolby Digital 3/0”, “Dolby Digital 3/1”, “Dolby Digital 3/2”, “Dolby Digital Dual I”, “Dolby Digital Dual II”, “MPEG 1+1”, “MPEG 1/0”, “MPEG 2/0”. This is the same info as you will see when pressing the “INFO” button in normal user mode (item “signal”). In case of ATSC receiving there will be no info displayed.
- **Tuned Bit.** Indicates if the selected preset is automatically tuned (via “Automatic Installation” in the setup menu) or via the automatic tuning system of the TV. In this case “Tuned bit” will show “YES”. If the TV was not able to auto-tune to the correct frequency, this item will show “NO”. So if “NO” is displayed, it could indicate that the customer has manually tuned to a frequency which was too far from a correct frequency, that the TV was not able to auto-tune any more.
- **Preset Lock.** Indicates if the selected preset has a child lock: “LOCKED” or “UNLOCKED”. Change via “MENU”, “TV”, “CHANNELS”, “CHANNEL LOCK”.

- **Lock After.** Indicates at what time the channel lock is set: “OFF” or e.g. “18:45” (lock time). Change “MENU”, “TV”, “CHANNELS”, “LOCK AFTER”.
- **TV Ratings Lock.** Indicates the “TV ratings lock” as set by the customer. Change via “MENU”, “TV”, “CHANNELS”, “TV RATINGS LOCK”. Possible values are: “ALL”, “NONE”, “TV-Y”, “TV-Y7”, “TV-G”, “TV-PG”, “TV-14” and “TV-MA”.
- **Movie Ratings Lock.** Indicates the “Movie ratings lock” as set by the customer. Change via “MENU”, “TV”, “CHANNELS”, “MOVIE RATINGS LOCK”. Possible values are: “ALL”, “NR”, “G”, “PG”, “PG-13”, “R”, “NC-17” and “X”.
- **V-Chip Tv Status.** Indicates the setting of the V-chip as applied by the selected TV channel. Same values can be shown as for “TV RATINGS LOCK”.
- **V-Chip Movie Status.** Indicates the setting of the V-chip as applied by the selected TV channel. Same values can be shown as for “MOVIE RATINGS LOCK”.
- **Options 1.** Gives the option codes of option group 1 as set in SAM (Service Alignment Mode).
- **Options 2.** Gives the option codes of option group 2 as set in SAM (Service Alignment Mode).
- **AVL.** Indicates the last status of AVL (Automatic Volume Level): “ON” or “OFF”. Change via “MENU”, “TV”, “SOUND”, “AVL”. AVL can not be set in case of digital audio reception (e.g. Dolby Digital or AC3)
- **Delta Volume.** Indicates the last status of the delta volume for the selected preset as set by the customer: from “-12” to “+12”. Change via “MENU”, “TV”, “SOUND”, “DELTA VOLUME”.
- **HDMI key validity.** Indicates the key’s validity.
- **IEEE key validity.** Indicates the key’s validity (n.a.).
- **POD key validity.** Indicates the key’s validity (n.a.).
- **Digital Signal Quality.** Indicates quality of the received digital signal (0= low).

How to Exit CSM

Press any key on the RC-transmitter (with exception of the “CHANNEL +/-”, “VOLUME”, “MUTE” and digit (0-9) keys).

5.3 Stepwise Start-up

The stepwise start-up method, as known from FTL/FTP sets is not valid any more. The situation for this chassis is as follows: when the TV is in a protection state detected via the Stand-by Processor (and thus blinking an error) **and** SDM is activated via shortcutting the pins on the SSB, the TV starts up until it reaches the situation just before protection. So, this is a kind of automatic stepwise start-up. In combination with the start-up diagrams below, you can see which supplies are present at a certain moment.
Important to know here is, that if e.g. the 3V3 detection fails (and thus error 11 is blinking) **and** the TV is restarted via SDM, the Stand-by Processor will enable the 3V3, but will not go to protection now. The TV will stay in this situation until it is reset (Mains/AC Power supply interrupted).

The abbreviations “SP” and “MP” in the figures stand for:
- SP: protection or error detected by the **S**tand-by **P**rocessor.
- MP: protection or error detected by the VIPER **M**ain **P**rocessor.

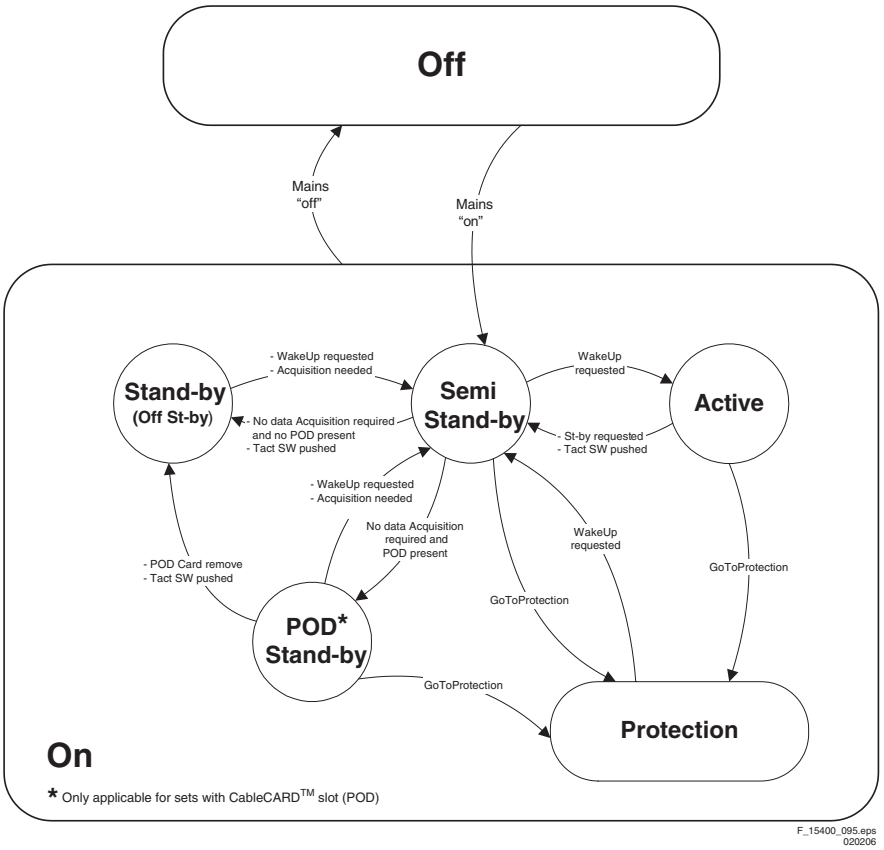

Figure 5-2 Transition diagram

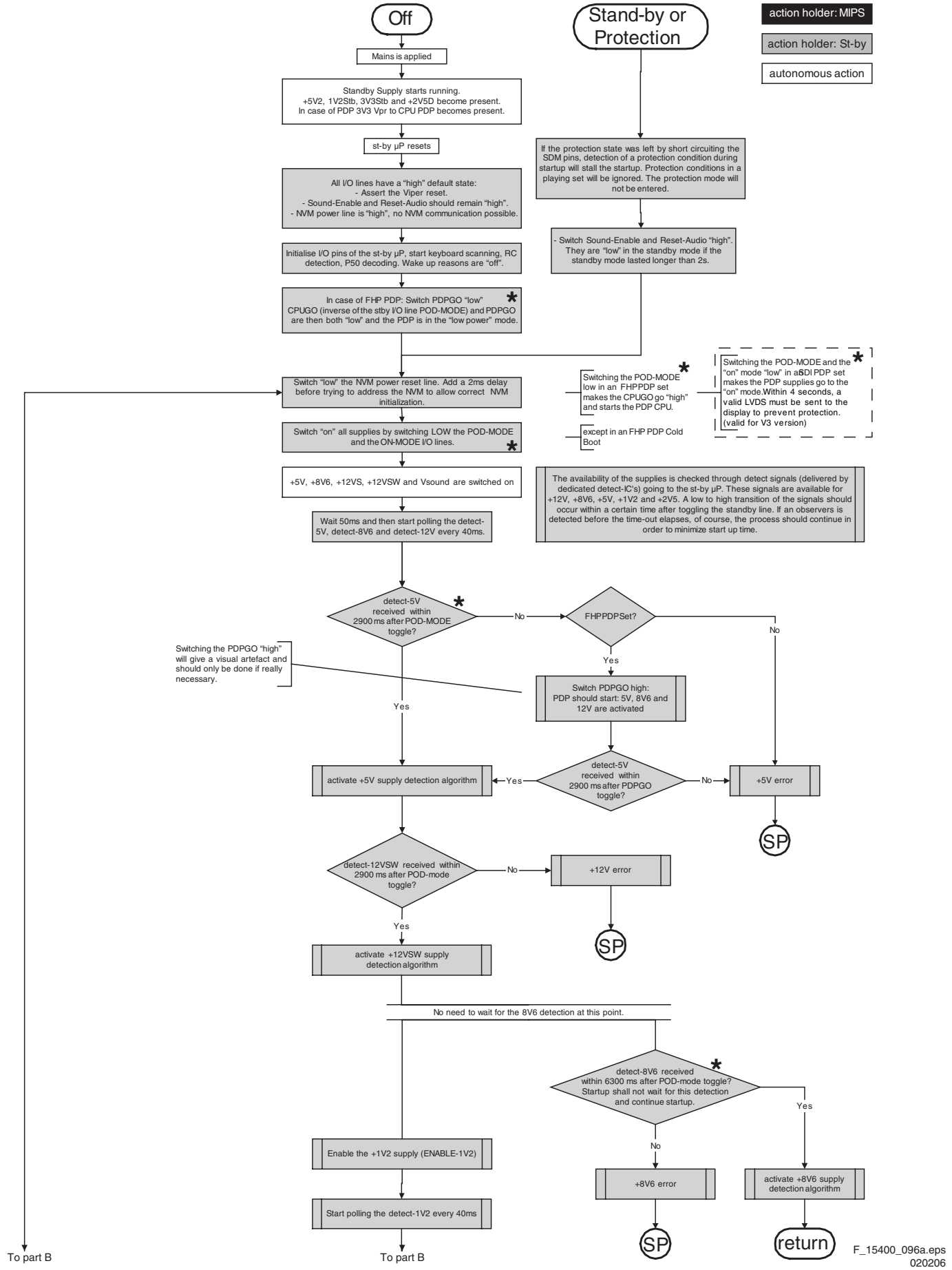

* Only applicable for sets with CableCARD™ slot (POD)

Figure 5-3 "Off" to "Semi Stand-by" flowchart (part 1)

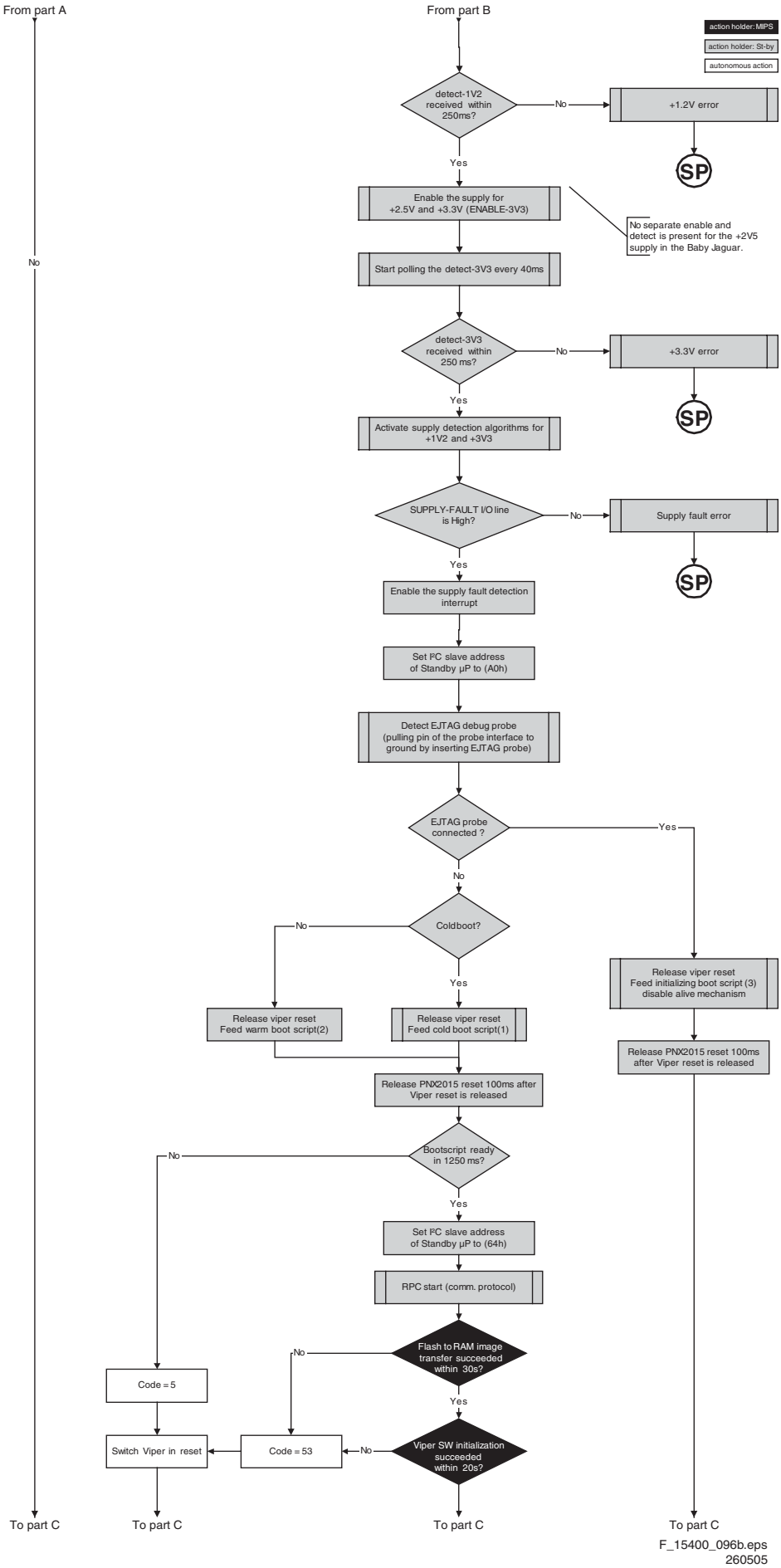

Figure 5-4 “Off” to “Semi Stand-by” flowchart (part 2)

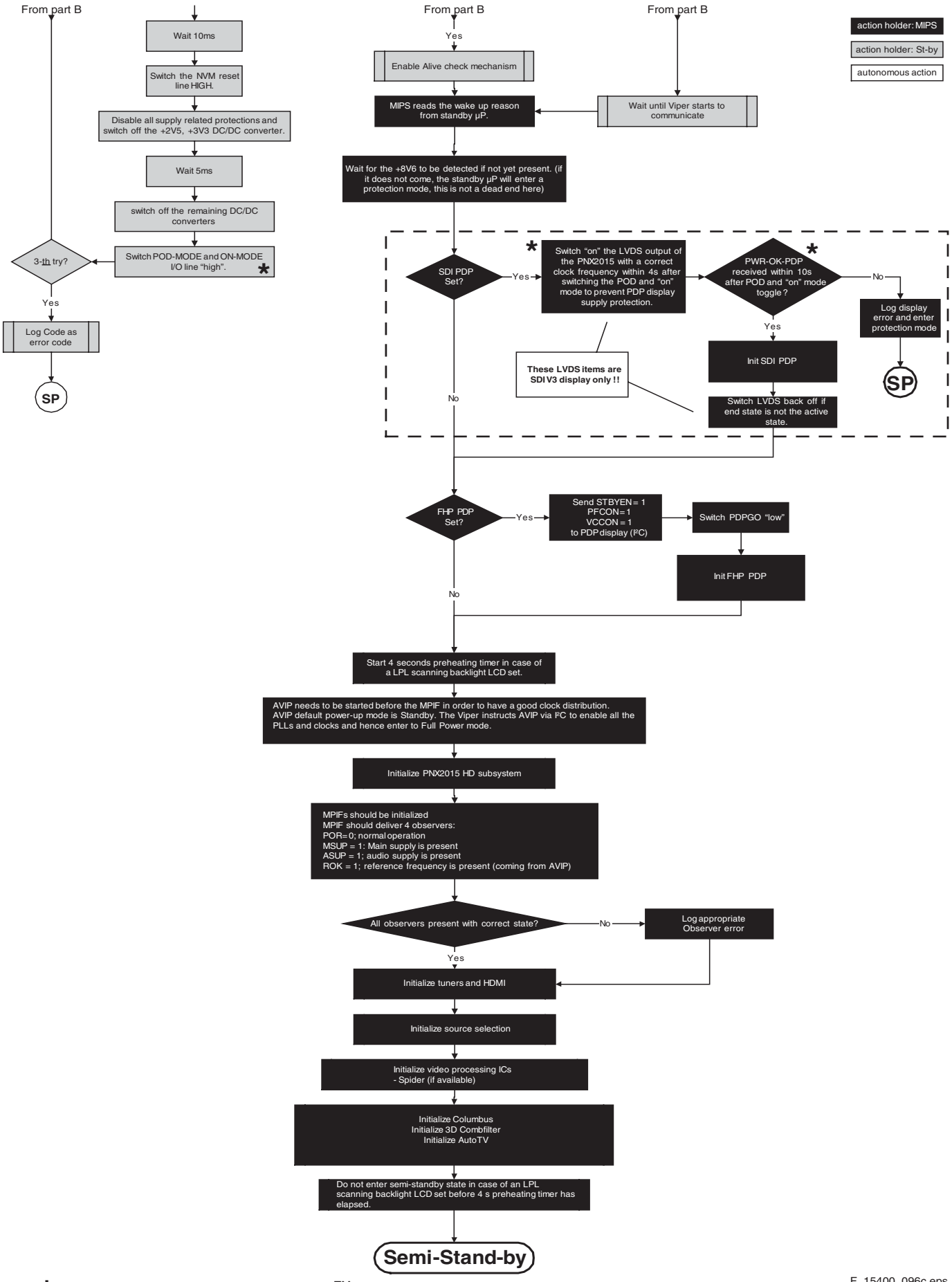

* Only applicable for sets with CableCARD™ slot (POD)

F_15400_096c.eps
020206

Figure 5-5 "Off" to "Semi Stand-by" flowchart (part 3)

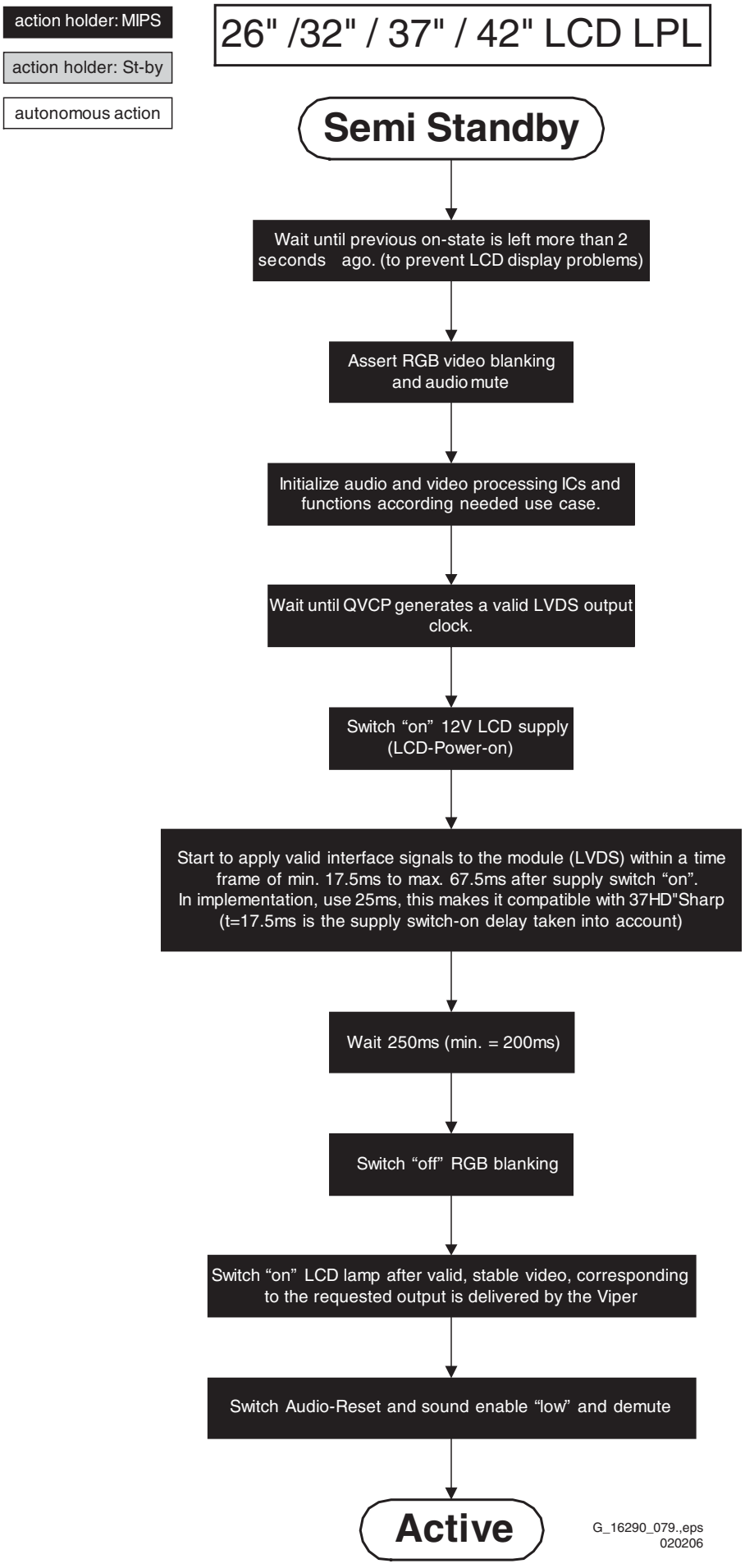

Figure 5-6 “Semi Stand-by” to “Active” flowchart

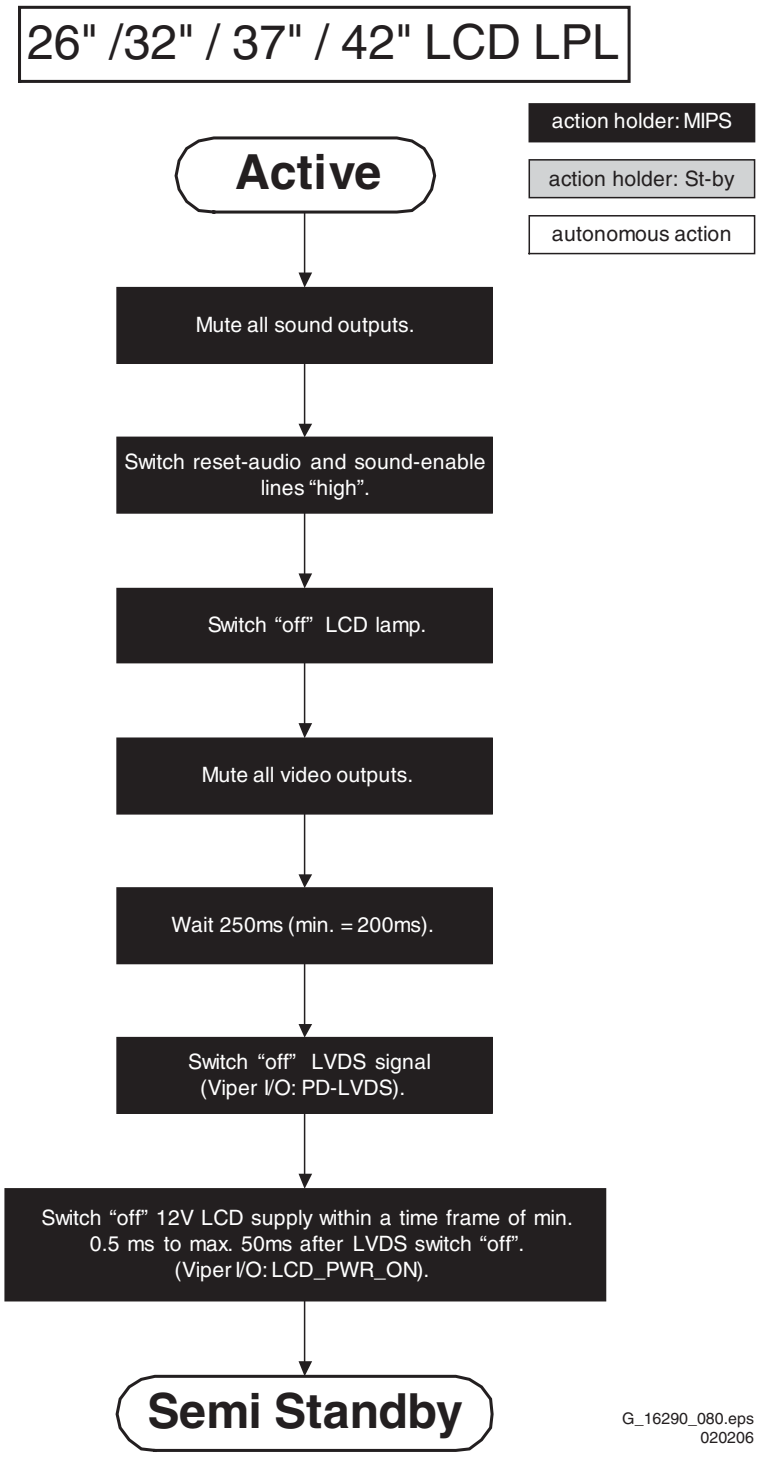

Figure 5-7 "Active" to "Semi Stand-by" flowchart

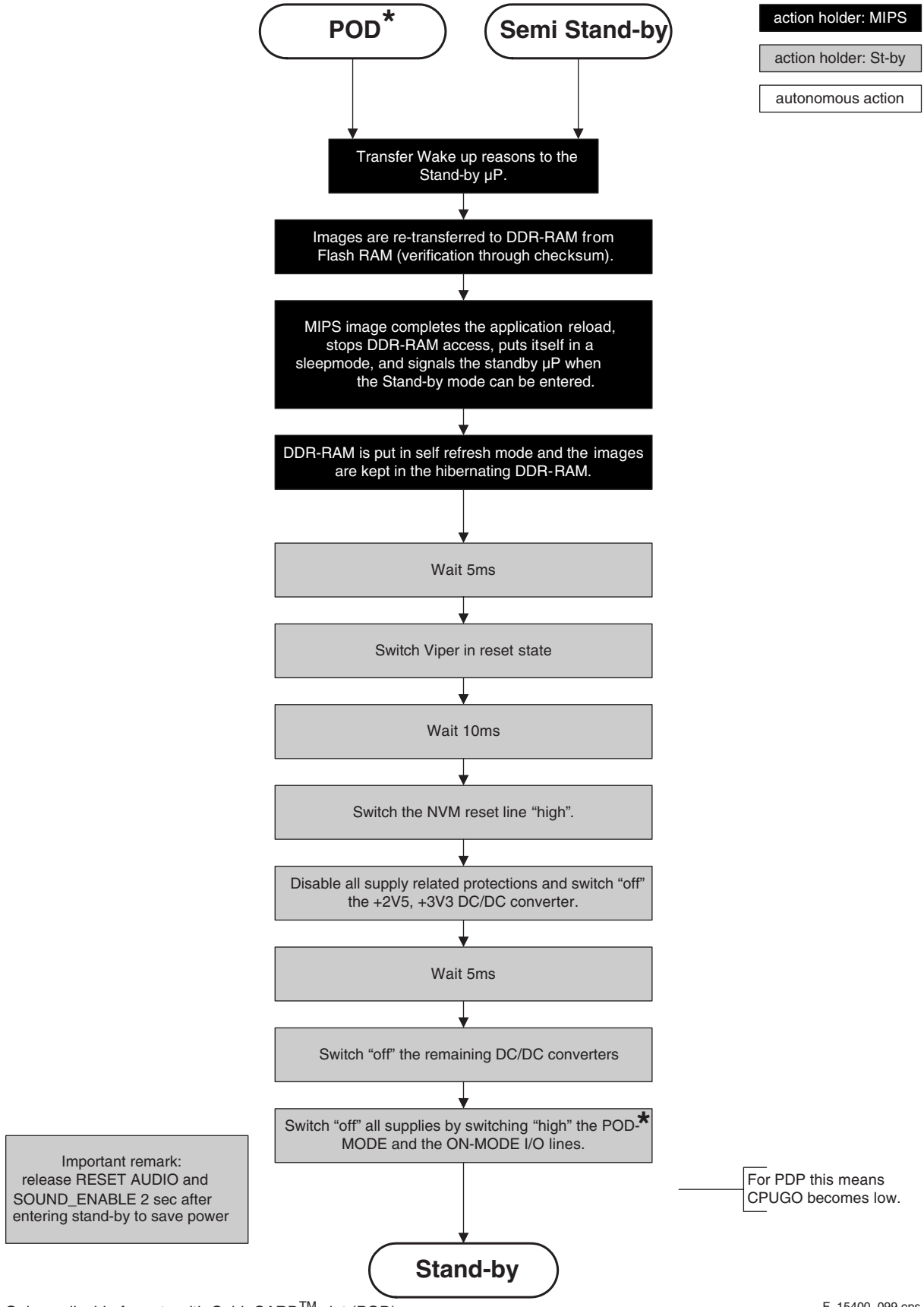

Figure 5-8 "Semi Stand-by" to "Stand-by" flowchart

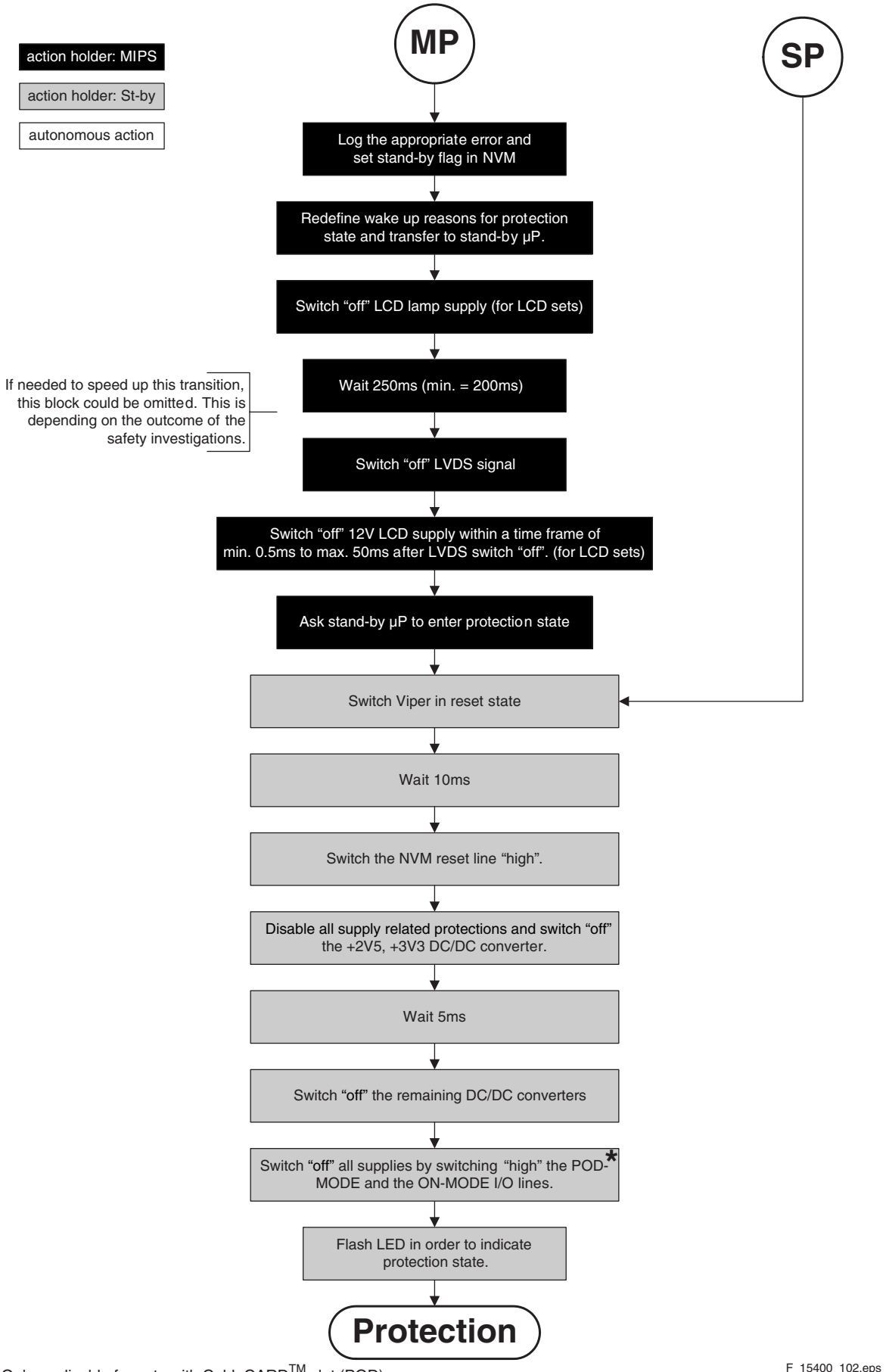

Figure 5-9 "Protection" flowchart

5.4 Service Tools

5.4.1 ComPair

Introduction
ComPair (Computer Aided Repair) is a service tool for Philips Consumer Electronics products. ComPair is a further development on the European DST (service remote control), which allows faster and more accurate diagnostics. ComPair has three big advantages:

1. ComPair helps you to quickly get an understanding on how to repair the chassis in a short time by guiding you systematically through the repair procedures.
2. ComPair allows very detailed diagnostics (on I^2C level) and is therefore capable of accurately indicating problem areas. You do not have to know anything about I^2C commands yourself because ComPair takes care of this.
3. ComPair speeds up the repair time since it can automatically communicate with the chassis (when the microprocessor is working) and all repair information is directly available. When ComPair is installed together with the Force/SearchMan electronic manual of the defective chassis, schematics and PWBs are only a mouse click away.

Specifications
ComPair consists of a Windows based fault finding program and an interface box between PC and the (defective) product. The ComPair interface box is connected to the PC via a serial (or RS-232) cable.
For this chassis, the ComPair interface box and the TV communicate via a bi-directional service cable via the service connector(s).

The ComPair fault finding program is able to determine the problem of the defective television. ComPair can gather diagnostic information in two ways:

- Automatically (by communicating with the television): ComPair can automatically read out the contents of the entire error buffer. Diagnosis is done on I^2C/UART level. ComPair can access the I^2C/UART bus of the television. ComPair can send and receive I^2C/UART commands to the microcontroller of the television. In this way, it is possible for ComPair to communicate (read and write) to devices on the I^2C/UART buses of the TV-set.
- Manually (by asking questions to you): Automatic diagnosis is only possible if the microcontroller of the television is working correctly and only to a certain extent. When this is not the case, ComPair will guide you through the fault finding tree by asking you questions *(e.g. Does the screen give a picture? Click on the correct answer: YES / NO)* and showing you examples *(e.g. Measure test-point I7 and click on the correct oscillogram you see on the oscilloscope).* You can answer by clicking on a link *(e.g. text or a waveform picture)* that will bring you to the next step in the fault finding process.

By a combination of automatic diagnostics and an interactive question / answer procedure, ComPair will enable you to find most problems in a fast and effective way.

How to Connect
This is described in the chassis fault finding database in ComPair.

Caution: It is compulsory to connect the TV to the PC as shown in the picture below (with the ComPair interface in between), as the ComPair interface acts as a level shifter. If one connects the TV directly to the PC (via UART), ICs will be blown!

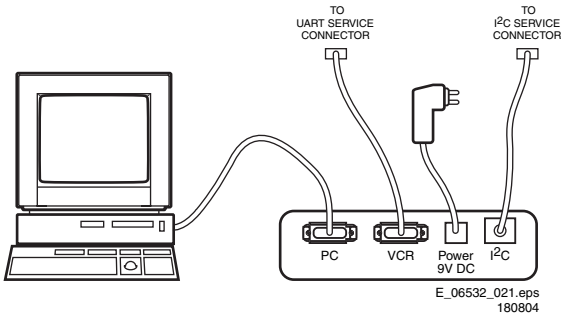

Figure 5-10 ComPair interface connection

How to Order
ComPair order codes:

- ComPair Software: ST4191.
- ComPair Interface Box: 4822 727 21631.
- AC Adapter: T405-ND.
- ComPair Quick Start Guide: ST4190.
- ComPair interface extension cable: 3139 131 03791.
- ComPair UART interface cable: 3122 785 90630.

Note: If you encounter any problems, contact your local support desk.

5.4.2 LVDS Tool

Introduction
This service tool (also called “ComPair Assistant 1“) may help you to identify, in case the TV does not show any picture, whether the Small Signal Board (SSB) **or** the display of a Flat TV is defective.
Furthermore it is possible to program EPLDs with this tool (Byte blaster). Read the user manual for an explanation of this feature.

Since 2004, the LVDS output connectors in our Flat TV models are standardized (with some exceptions). With the two delivered LVDS interface cables (31p and 20p) you can cover most chassis (in special cases, an extra cable will be offered).

When operating, the tool will show a small (scaled) picture on a VGA monitor. Due to a limited memory capacity, it is not possible to increase the size when processing high-resolution LVDS signals (> 1280x960). Below this resolution, or when a DVI monitor is used, the displayed picture will be full size.

Generally this tool is intended to determine if the SSB is working or not. Thus to determine if LVDS, RGB, and sync signals are okay.

How to Connect
Connections are explained in the user manual, which is packed with the tool.

Note: To use the LVDS tool, you must have ComPair release 2004-1 (or later) on your PC (engine version >= 2.2.05).
For every TV type number and screen size, one must choose the proper settings via ComPair. The ComPair file will be updated regularly with new introduced chassis information.

How to Order

- LVDS tool (incl. two LVDS cables: 31p and 20p): 3122 785 90671.
- LVDS tool Service Manual: 3122 785 00810.

5.5 Error Codes

5.5.1 Introduction

The error code buffer contains all detected errors since the last time the buffer was erased. The buffer is written from left to right, new errors are logged at the left side, and all other errors shift one position to the right.
When an error has occurred, the error is added to the list of errors, provided the list is not full or the error is a protection error.
When an error occurs and the error buffer is full, then the new error is not added, and the error buffer stays intact (history is maintained), except when the error is a protection error.
To prevent that an occasional error stays in the list forever, the error is removed from the list after 50+ operation hours.
When multiple errors occur (errors occurred within a short time span), there is a high probability that there is some relation between them.

Basically there are three kinds of errors:
- **Errors detected by the Stand-by Processor.** These errors will always lead to protection and an automatic start of the blinking LED for the concerned error (see paragraph "The Blinking LED Procedure"). In these cases SDM can be used to start up (see chapter "Stepwise Start-up").
- **Errors detected by VIPER that lead to protection.** In this case the TV will go to protection and the front LED will blink at 3 Hz. Further diagnosis via service modes is not possible here (see also paragraph "Error Codes" -> "Error Buffer" -> "Extra Info").
- **Errors detected by VIPER that do not lead to protection.** In this case the error can be read out via ComPair, via blinking LED method, or in case you have picture, via SAM.

5.5.2 How to Read the Error Buffer

Use one of the following methods:
- On screen via the SAM (only if you have a picture). E.g.:
  - **00 00 00 00 00**: No errors detected
  - **06 00 00 00 00**: Error code 6 is the last and only detected error
  - **09 06 00 00 00**: Error code 6 was first detected and error code 9 is the last detected error
- Via the blinking LED procedure (when you have no picture). See next paragraph.
- Via ComPair.

5.5.3 How to Clear the Error Buffer

Use one of the following methods:
- By activation of the "RESET ERROR BUFFER" command in the SAM menu.
- With a normal RC, key in sequence "MUTE" followed by "062599" and "OK".
- If the content of the error buffer has not changed for 50+ hours, it resets automatically.

5.5.4 Error Buffer

In case of non-intermittent faults, clear the error buffer before you begin the repair (**before** clearing the buffer, write down the content, as this history can give you significant information). This to ensure that old error codes are no longer present.
If possible, check the entire contents of the error buffer. In some situations, an error code is only the result of another error code and not the actual cause (e.g., a fault in the protection detection circuitry can also lead to a protection).
There are several mechanisms of error detection:
- Via error bits in the status registers of ICs.
- Via polling on I/O pins going to the stand-by processor.
- Via sensing of analogue values on the stand-by processor.
- Via a "not acknowledge" of an I^2C communication

Take notice that some errors need more than 90 seconds before they start blinking. So in case of problems wait 2 minutes from start-up onwards, and then check if the front LED is blinking.

Table 5-3 Error code overview

Error	Description	Error/Prot	Detected by	Device	Defective module	Result
1	I^2C1	P	VIPER	n.a.	I^2C1_blocked	Protection + 3 Hz blinking
2	I^2C2	P	VIPER	n.a.	I^2C2_blocked	Protection + 3 Hz blinking
3	I^2C3	P	Stby µP	n.a.	I^2C3_blocked	Protection + 3 Hz blinking
4	I^2C4	P	VIPER	n.a.	I^2C4_blocked	Protection + 3 Hz blinking
5	VIPER does not boot (hardware failure)	P	Stby µP	PNX8550		Protection + Error blinking
6	5V supply	P	Stby µP	n.a.		Protection + Error blinking
8	1.2V DC/DC	P	Stby µP	n.a.		Protection + Error blinking
11	3.3V DC/DC	P	Stby µP	n.a.		Protection + Error blinking
12	12V supply	P	Stby µP	n.a.		Protection + Error blinking
14	Supply Class D amplifiers	P	Stby µP			Protection + Error blinking
17	MPIF1 Audio Supply (ASUP)	E	VIPER	PNX3000	IF I/O	Error logged
18	MPIF1 ref freq	E	VIPER	PNX3000	IF I/O	Error logged
25	Supply fault	P	Stby µP			Protection + Error blinking
27	Phoenix	E	VIPER	PNX2015B	HD subsystem	Error logged
29	AVIP1	E	VIPER	PNX2015	AV input processor 1	Error logged
32	MPIF1	E	VIPER	KN10241C	Analog Front End 1	Error logged
34	Tuner1	E	VIPER		Tuner 1	Error logged
37	Channel decoder	E	VIPER	NXT2003		Error logged
43	Hi Rate Front End	E	VIPER	TDA8751	HDMI	Error logged
45	Columbus 1	E	VIPER	PNX2015	Comb filter	Error logged
53	VIPER does not boot (software failure)	P	Stby µP	PNX8550		Protection + Error blinking
63	PDP Display	P	VIPER		Display	Protection + 3 Hz blinking

Extra Info
- **Error 1 (I^2C bus 1 blocked).** When this error occurs, the TV will go to protection and the front LED will blink at 3 Hz. Now you can partially restart the TV via the SDM shortcut pins on the SSB. Depending on the software version it is possible that no further diagnose (error code read-out) is possible. With the knowledge that only errors 1, 2, 4, and 63 result in a 3 Hz blinking LED, the range of possible defects is limited.
- **Error 2 (I^2C bus 2 blocked).** When this error occurs, the TV will go to protection and the front LED will blink at 3 Hz. Now you can partially restart the TV via the SDM shortcut

pins on the SSB. Due to hardware restriction (I^2C bus 2 is the fast I^2C bus) it will be impossible to start up the VIPER and therefore it is also impossible to read out the error codes via ComPair or via the blinking LED method. With the knowledge that only errors 1, 2, 4, and 63 result in a 3 Hz blinking LED, the range of possible defects is limited. When you have restarted the TV via the SDM shortcut pins, and then pressed "CH+" on your remote control, the TV will go to protection again, and the front LED blink at 3 Hz again. This could be an indication that the problem is related to error 2.

- **Error 3 (I^2C bus 3 blocked).** There are only three devices on I^2C bus 3: VIPER, Stand-by Processor, and NVM. The Stand-by Processor is the detection device of this error, so this error will only occur if the VIPER or the NVM is blocking the bus. This error will also be logged when the NVM gives no acknowledge on the I^2C bus (see error 44). Note that if the 12 V supply is missing (connector 1M46 on the SSB), the DC/DC supply on the SSB will not work. Therefore the VIPER will not get supplies and could block I^2C bus 3. So, a missing 12 V can also lead to an error 3.
- **Error 4 (I^2C bus 4 blocked).** Same remark as with error 1.
- **Error 5 (I^2C bus 5 blocked).** This error will point to a severe hardware problem around the VIPER (supplies not OK, VIPER completely dead, I^2C link between VIPER and Stand-by Processor broken, etc. ...).
- **Error 7 (8.6 V error).** Except a physical problem with the 8.6 V itself, it is also possible that there is something wrong with the Audio DC Protection: see paragraph "Hardware Protections" for this.
- **Error 12 (12 V error).** Except a physical problem with the 12 V itself, it is also possible that there is something wrong with the Audio DC Protection: see paragraph "Hardware Protections" for this.
- **Error 14 (Audio supply).** This error is triggered in case of too low voltage of the audio supplies and therefore a drop of the audio supply voltage of below approx. 9 V per supply rail (or lower than 18 V rail to rail). Also a DC voltage of higher than 1 V DC on the speakers will lead to protection and error 14 blinking. For LCD sets this circuit can be found on schematic SA3, for PDP sets this can be found on schematic C. It should be noted that for 26-inch models there is only a supply link between the amplifiers and the stand-by μC whereas in all other models this link is implemented by Audio-Prot line pin 7 on 1 M02.
- **Error 29 (AVIP1).** This error will probably generate extra errors. You will probably also see errors 32 (MPIF) and error 31 (AVIP 2). Error 29 and 31 will always be logged together due to the fact that both AVIPs are inside the PNX2015 and are on the same I^2C bus. In this case start looking for the cause around AVIP (part of PNX2015).
- **Error 31 (AVIP2).** See info on error 29.
- **Error 34 (Tuner 1).** When this error is logged, it is not sure that there is something wrong with the tuner itself. It is also possible that there is something wrong with the communication between channel decoder and tuner. See schematic B2B.
- **Error 37 (Channel decoder).** This error will always log error 34 (tuner) extra. This is due to the fact that the tuner I^2C bus is coming from the channel decoder.
- **Error 44 (NVM).** This error will never occur because it is masked by error 3 (I^2C bus 3). The detection mechanism for error 3 checks on an I^2C acknowledge of the NVM. If NVM gives no acknowledge, the stand-by software assumes that the bus is blocked, the TV goes to protection and error 3 will be blinking.
- **Error 53.** This error will indicate that the VIPER has started to function (by reading his boot script, if this would have failed, error 5 would blink) but initialization was never completed because of hardware peripheral problems (NAND flash, ...) or software initialization problems. Possible cause could be that there is no valid software loaded (try to upgrade to the latest main software version).

5.6 The Blinking LED Procedure

5.6.1 Introduction

The blinking LED procedure can be split up into two situations:

- Blinking LED procedure in case of a protection detected by the stand-by processor. In this case the error is automatically blinked. This will be only one error, namely the one that is causing the protection. Therefore, you do not have to do anything special, just read out the blinks. A long blink indicates the decimal digit, a short blink indicates the units.
- Blinking LED procedure in the “on” state. Via this procedure, you can make the contents of the error buffer visible via the front LED. This is especially useful for fault finding, when there is no picture.

When the blinking LED procedure is activated in the “on” state, the front LED will show (blink) the contents of the error-buffer. Error-codes > 10 are shown as follows:

1. “n” long blinks (where “n” = 1 - 9) indicating decimal digit,
2. A pause of 1.5 s,
3. “n” short blinks (where “n”= 1 - 9),
4. A pause of approx. 3 s.
5. When all the error-codes are displayed, the sequence finishes with a LED blink of 3 s,
6. The sequence starts again.

Example: Error 12 9 6 0 0.
After activation of the SDM, the front LED will show:

1. 1 long blink of 750 ms (which is an indication of the decimal digit) followed by a pause of 1.5 s,
2. 2 short blinks of 250 ms followed by a pause of 3 s,
3. 9 short blinks followed by a pause of 3 s,
4. 6 short blinks followed by a pause of 3 s,
5. 1 long blink of 3 s to finish the sequence,
6. The sequence starts again.

5.6.2 How to Activate

Use one of the following methods:

- **Activate the SDM.** The blinking front LED will show the entire contents of the error buffer (this works in “normal operation” mode).
- **Transmit the commands “MUTE” - “062500” - “OK” with a normal RC.** The complete error buffer is shown. Take notice that it takes some seconds before the blinking LED starts.
- T**ransmit the commands “MUTE” - “06250x” - “OK” with a normal RC** (where “x” is a number between 1 and 5). When x= 1 the last detected error is shown, x= 2 the second last error, etc.... Take notice that it takes some seconds before the blinking LED starts.

5.7 Protections

5.7.1 Software Protections

Most of the protections and errors use either the stand-by microprocessor or the VIPER controller as detection device. Since in these cases, checking of observers, polling of ADCs, filtering of input values are all heavily software based, these protections are referred to as software protections.
There are several types of software related protections, solving a variety of fault conditions:

- **Protections related to supplies:** check of the 12V, +5V, +8V6, +1.2V, +2.5V and +3.3V.
- **Protections related to breakdown of the safety check mechanism.** E.g. since a lot of protection detections are done by means of the VIPER, failing of the VIPER communication will have to initiate a protection mode since safety cannot be guaranteed anymore.

Remark on the Supply Errors
The detection of a supply dip or supply loss during the normal playing of the set does not lead to a protection, but to a cold reboot of the set.

Protections during Start-up
During TV start-up, some voltages and IC observers are actively monitored to be able to optimize the start-up speed, and to assure good operation of all components. If these monitors do not respond in a defined way, this indicates a malfunction of the system and leads to a protection. As the observers are only used during start-up, they are described in the start-up flow in detail (see paragraph “Stepwise Start-up").

5.7.2 Hardware Protections

There is one hardware protection in this chassis: “Audio DC Protection”. This protection occurs when there is a DC voltage on the speakers. In that case the main supply is switched "off", but the stand-by supply is still working.
For the Samsung V4 PDP displays, the 8V6 supply is switched "off" and the LED on the display’s Main Supply blinks eleven times, which means there is an overvoltage protection. The front LED of the TV will blink error 7 (8V6 error).
In case of LCD supplies, the 12V supply will drop. This will be detected by the stand-by processor, which will start blinking the 12 V error (error 12).

Repair Tip

- It is also possible that you have an audio DC protection because of an interruption in one or both speakers (the DC voltage that is still on the circuit cannot disappear through the speakers).

5.8 Fault Finding and Repair Tips

Read also paragraph "Error Codes" - "Extra Info".

5.8.1 Exit “Factory Mode”

When an "F" is displayed in the screen's right corner, this means that the set is in "Factory" mode, and it normally happens after a new SSB has been mounted.
To exit this mode, push the "VOLUME minus" button on the TV's keyboard control for 5 seconds and restart the set

5.8.2 MPIF

Important things to make the MPIF work:

- Supply.
- Clock signal from the AVIP.
- I^2C from the VIPER.

5.8.3 AVIP

Important things to make the AVIP work:

- Supplies.
- Clock signal from the VIPER.
- I^2C from the VIPER (error 29 and 31).

5.8.4 DC/DC Converter

Introduction

- The best way to find a failure in the DC/DC converters is to check their starting-up sequence at power "on" via the Mains/AC Power cord, presuming that the Stand-by Processor is operational.
- If the input voltage of the DC/DC converters is around 12 V (measured on the decoupling capacitors 2U17/2U25/ 2U45) and the ENABLE signals are "low" (active), then the output voltages should have their normal values.
- First, the Stand-by Processor activates the +1V2 supply (via ENABLE-1V2).
- Then, after this voltage becomes present and is detected OK (about 100 ms), the other two voltages (+2V5 and +3V3) will be activated (via ENABLE-3V3).
- The current consumption of controller IC 7U00 is around 20 mA (that means around 200 mV drop voltage across resistor 3U22).
- The current capability of DC/DC converters is quite high (short-circuit current is 7 to 10 A), therefore if there is a linear integrated stabilizer that, for example delivers 1.8V from +3V3 with its output overloaded, the +3V3 stays usually at its normal value even though the consumption from +3V3 increases significantly.
- The +2V5 supply voltage is obtained via a linear stabilizer made with discrete components that can deliver a lot of current. Therefore, in case +2V5 (or +2V5D) is short-circuited to GND, the +3V3 will not have the normal value but much less.
- The supply voltage +12VSW is protected for over-currents by fuse 1U04.

Fault Finding

- **Symptom:** +1V2, +2V5, and +3V3 not present (even for a short while ~10ms).
  1. Check 12V availability (fuse 1U01, resistor 3U22, power MOS-FETs) and enable signal ENABLE-1V2 (active low).
  2. Check the voltage on pin 9 (1.5 V).
  3. Check for +1V2 output voltage short-circuit to GND that can generate pulsed over-currents 7-10 A through coil 5U03.
  4. Check the over-current detection circuit (2U12 or 3U97 interrupted).

- **Symptom:** +1V2 present for about 100 ms. Supplies +2V5 and +3V3 not rising.
  1. Check the ENABLE-3V3 signal (active "low").
  2. Check the voltage on pin 8 (1.5 V).
  3. Check the under-voltage detection circuit (the voltage on collector of transistor 7U10-1 should be less than 0.8 V).
  4. Check for output voltages short-circuits to GND (+3V3, +2V5 and +2V5D) that generate pulsed over-currents of 7-10 A through coil 5U00.
  5. Check the over-current detection circuit (2U18 or 3U83 interrupted).

- **Symptom:** +1V2 OK, but +2V5 and +3V3 present for about 100 ms. **Cause:** The SUPPLY-FAULT line stays "low" even though the +3V3 and +1V2 is available. The Stand-by Processor is detecting that and switches all supply voltages "off".
  1. Check the drop voltage across resistor 3U22 (this could be too high)
  2. Check if the +1V2 or +3V3 are higher than their normal values. This can be due to defective DC feedback of the respective DC/DC converter (3U18 or 3UA7).

- **Symptom:** +1V2, +2V5, and +3V3 look okay, except the ripple voltage is increased (audible noise can come from the filtering coils 5U00 or 5U03).
  Cause: Instability of the frequency and/or duty cycle of one or both DC/DC converters.
  – Check resistor 3U06, the decoupling capacitors, the AC feedback circuits (2U20 + 2U21 + 3U14 + 3U15 for +1V2 or 2U19 + 2U85 + 3U12 + 3U13 for +3V3), the compensation capacitors 2U09, 2U10, 2U23 and 2U73, and IC 7U00.

Note 1: If fuse 1U01 is broken, this usually means a pair of defective power MOSFETs (7U01 or 7U03). Item 7U00 should be replaced as well in this case.

5.9 Software Upgrading

5.9.1 Introduction

The set software and security keys are stored in a NAND-Flash (item 7P80), which is connected to the VIPER via the PCI bus.

It is possible **for the user** to upgrade the **main** software via the USB port. This allows replacement of a software image in a standalone set, without the need of an E-JTAG debugger. A description on how to upgrade the main software can be found in the "Directions For Use".

Important: When the NAND-Flash must be replaced, a new SSB must be ordered, due to the presence of the security keys!!! See table “SSB service kits” for the order codes.
Perform the following actions after SSB replacement:
1. Set the correct option codes (see sticker inside the TV).
2. Update the TV software (see chapter 3 for instructions).
3. Perform the alignments as described in chapter 8.
4. Check in CSM menu 5 if the HDMI and POD keys are valid.

Table 5-4 SSB service kits (for EL and EP chassis)

Model Number	New SSB order code
26HF5334D/27	3139 267 27681
26PF5321D/37	3139 267 27681
32PF5321D/37	3139 267 27711
32PF7321D/37	3139 267 27711
32PF7421D/37	3139 267 27711
37PF7321D/37	3139 267 27691
42PF5321D/37	3139 267 27671
42PF7321D/37	3139 267 27671
42PF7421D/37	3139 267 27691
50MF231D/37	3139 267 27671
50PF7321D/37	3139 267 27671

Note: After replacing the SSB, execute the alignments according to the instructions in this manual.

5.9.2 Main Software Upgrade

The software image resides in the NAND-Flash, and is formatted in the following way:

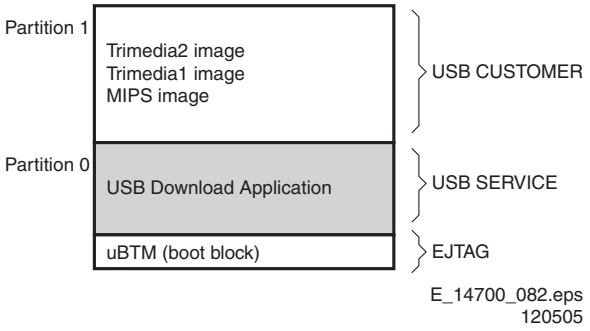

Figure 5-11 NAND-Flash format

Executables are stored as files in a file system. The boot loader (uBTM) will load the USB Download Application in partition 0 (USB drivers, bootscript, etc.). This application makes it then possible to upgrade the main software via USB.

Installing "Partition 0" software is possible via an external EJTAG tool, but also in a special way with the USB stick (see description in paragraph “Partition 0“).

Partition 1 (Customer)
To do a main software upgrade (partition 1) via USB, the set must be operational, and the "Partition 0" files for the VIPER **must** be installed in the NAND-Flash!

The new software can be uploaded to the TV by using a portable memory device or USB storage compliant devices (e.g. USB memory stick). You can download the new software from the Philips website to your PC.

Partition 0 (Service)
If the "Partition 0" software is corrupted, the software needs to be re-installed.
To upgrade this “USB download application” (partition 0 except the bootblock), insert an USB stick with the correct software, but press the “red” button on the remote control (in ”TV” mode) when it is asked via the on screen text.

Caution:
- The USB download application will now erase **both** partitions (except the boot block), so you need to reload the main SW after upgrading the USB download application. As long as this is not done, the USB download application will start when the set is switched “on”.
- When something goes wrong during the progress of this method (e.g. voltage dip or corrupted software file), the set

will not start up, and can only be recovered via the EJTAG tool!

5.9.3 Manual Start of the Main Software Upgrade Application

Normally, the software upgrading procedure will start automatically, when a memory device with the correct software is inserted, but in case this does not work, it is possible to force the TV into the software upgrade application. To do so:

- Disconnect the TV from the Mains/AC Power.
- Press the “OK” button on a Philips DVD RC-6 remote control (it is also possible to use the TV remote in "DVD" mode).
- Keep the “OK” button pressed while connecting the TV to the Mains/AC Power.
- The software upgrade application will start.
- When a memory device with upgrade software is connected, the upgrade process will start.

5.9.4 Stand-by Software Upgrade

It will be possible to upgrade the Stand-by software via a PC and the ComPair interface. Check paragraph "ComPair" on how to connect the interface. To upgrade the Stand-by software, use the following steps:

1. Disconnect the TV from the Mains/AC Power.
2. Short circuit the SPI pins [2] on the SSB. They are located outside the shielding (see figure “SDM and SPI service pads” earlier in this chapter).
3. Keep the SPI pins shorted while connecting the TV to the Mains/AC Power.
4. Release the short circuit after approx. two seconds.
5. Start up HyperTerminal (can be found in every Windows application via Programs -> Accessories -> Communications -> HyperTerminal. Use the following settings:
   - COM1
   - Bits per second = 38400
   - Data bits = 8
   - Parity = none
   - Stop bits = 1
   - Flow control = Xon / Xoff.
6. Press “Shift U” on your PC keyboard. You should now see the following info:
   - PNX2015 Loader V1.0
   - 19-09-2003
   - DEVID=0x05
   - Erasing
   - MCSUM=0x0000
   - =
7. If you do not see the above info, restart the above procedure, and check your HyperTerminal settings and the connections between PC and TV.
8. Via “Transfer” -> “Send text file ...”, you can send the proper upgrade file to the TV. This file will be distributed via the Service Organization.
9. After successful programming, you must see the following info:
   - DCSUM=0xECB3
   - :Ok
   - MCSUM=0xECB3
   - Programming
   - PCSUM=0xECB3
   - Finished
10. If you do not see this info, restart the complete procedure.
11. Close HyperTerminal.
12. Disconnect and connect Mains/AC Power again.

6. Block Diagrams, Test Point Overviews, and Waveforms

Wiring Diagram 26” LCD

WIRING 26” LCD

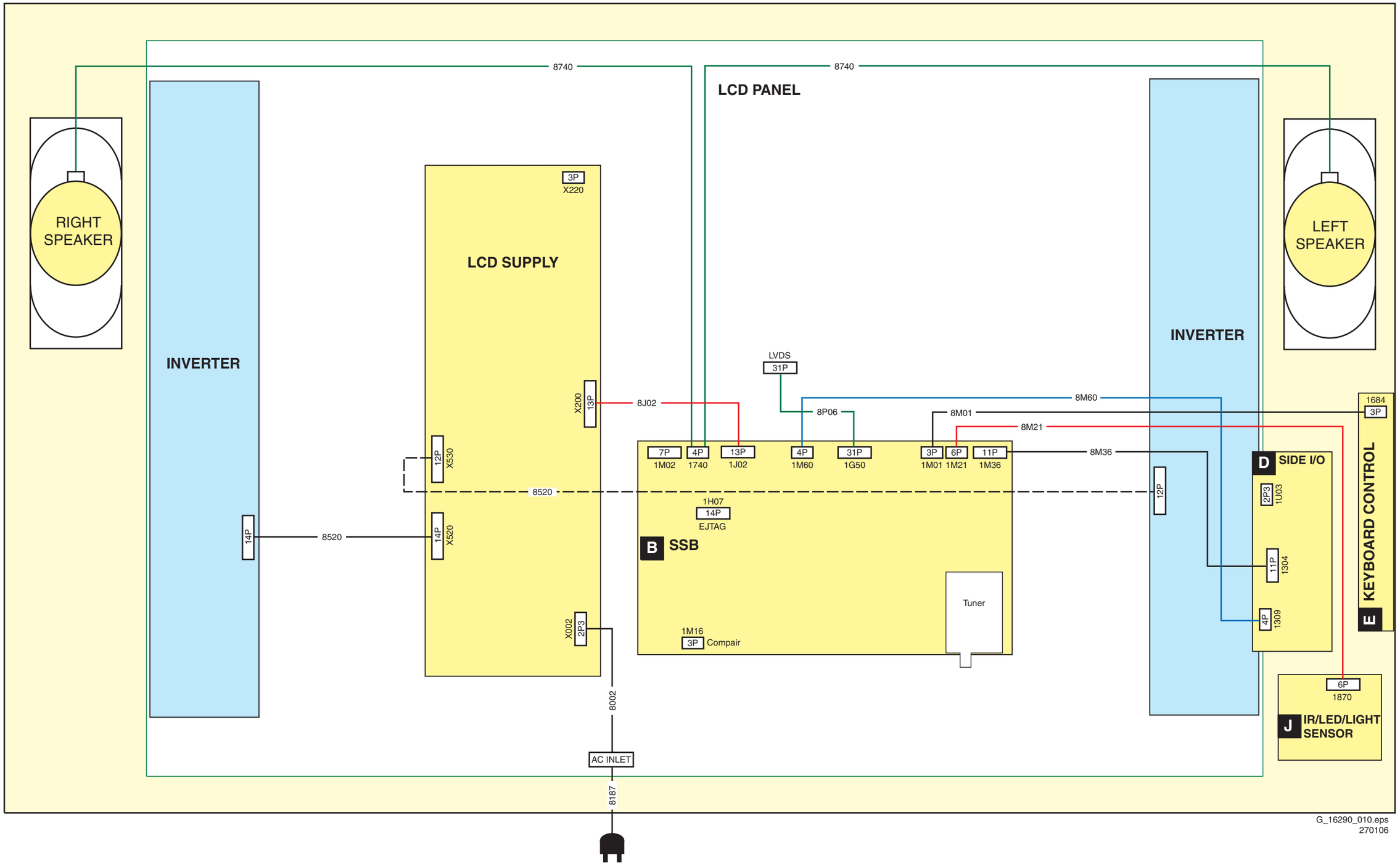

G_16290_010.eps
270106

Wiring Diagram 32” LCD

WIRING 32” LCD

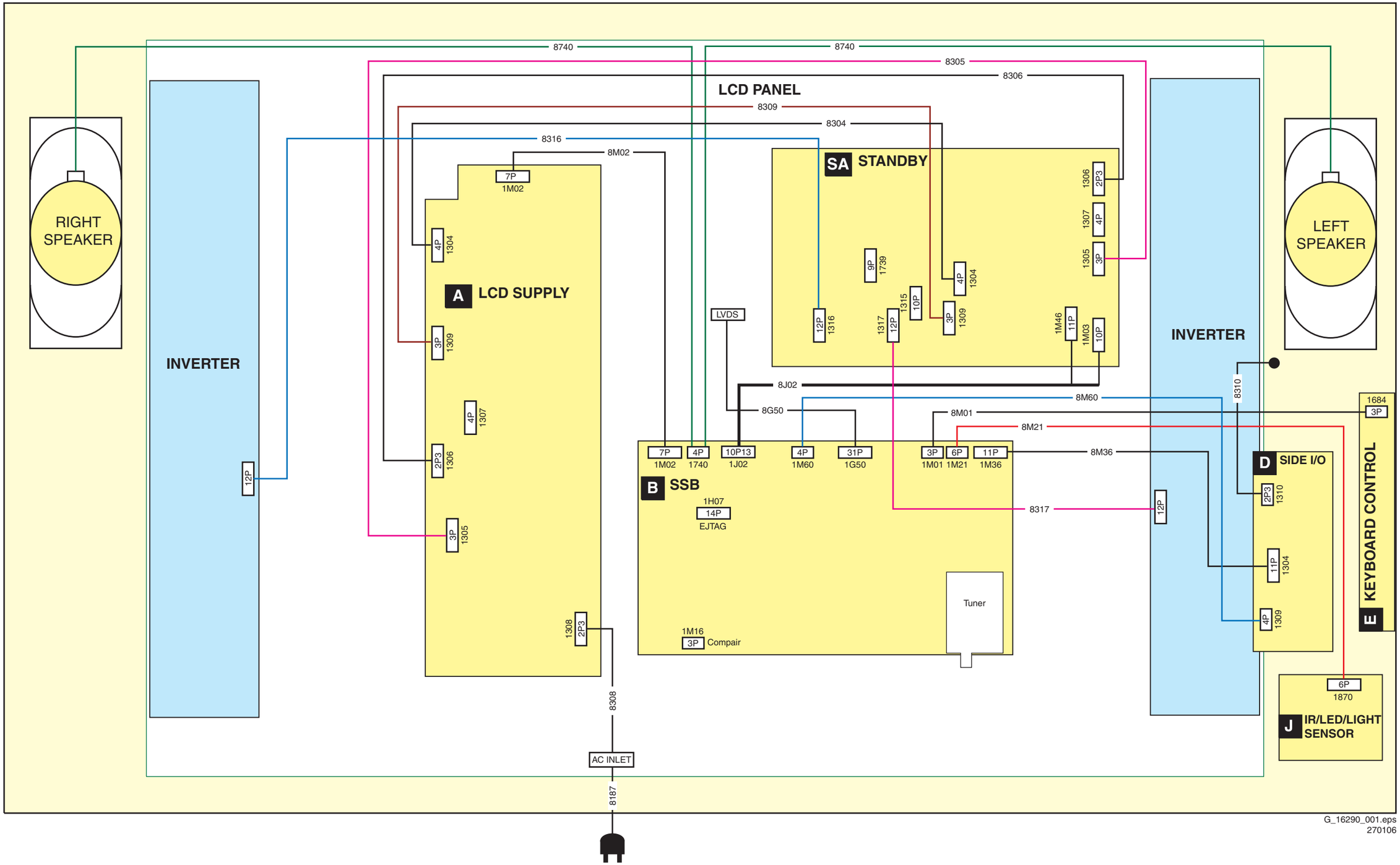

G_16290_001.eps
270106

Wiring Diagram 37” LCD

WIRING 37” LCD

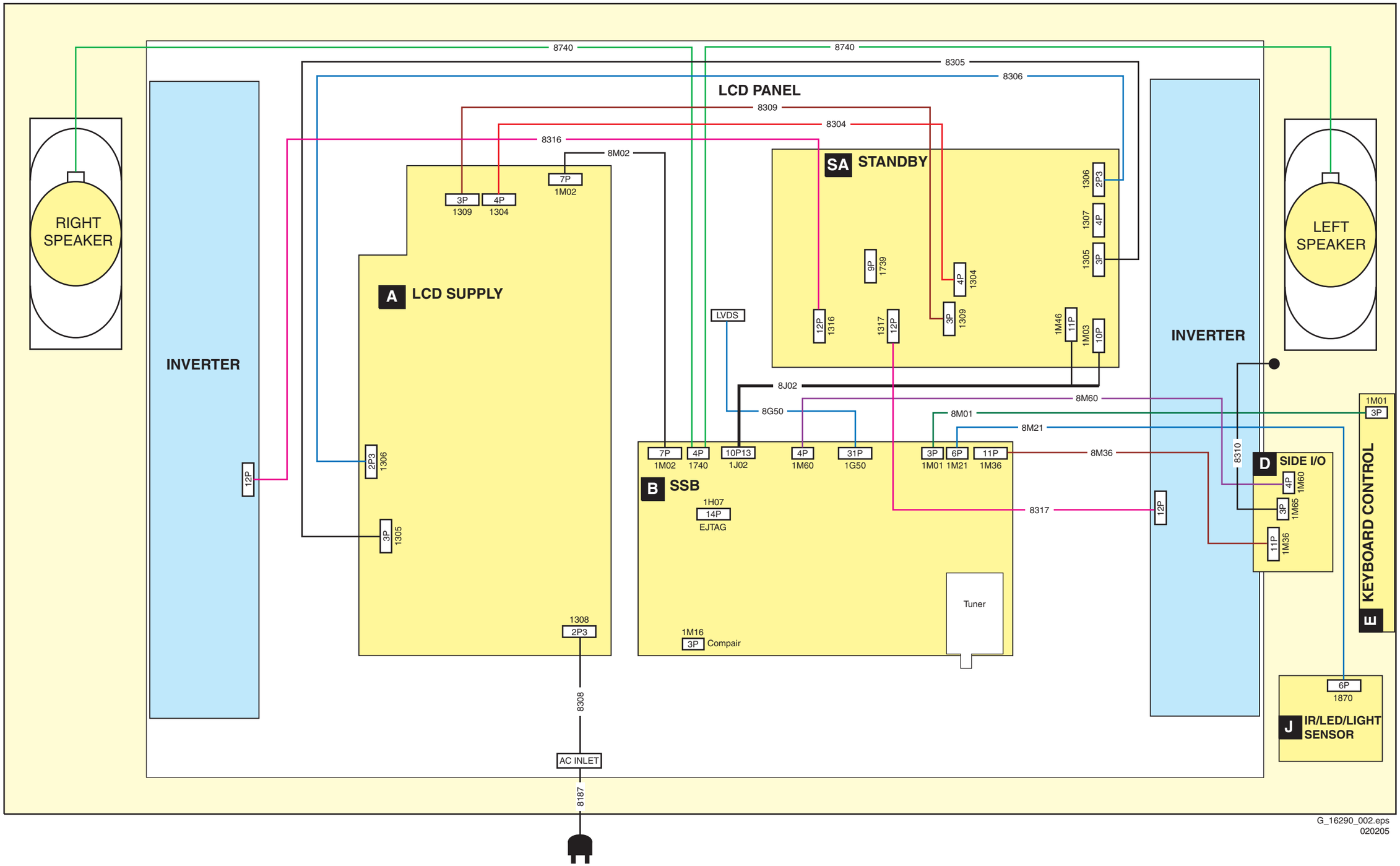

G_16290_002.eps
020205

Wiring Diagram 42” LCD

WIRING 42” LCD

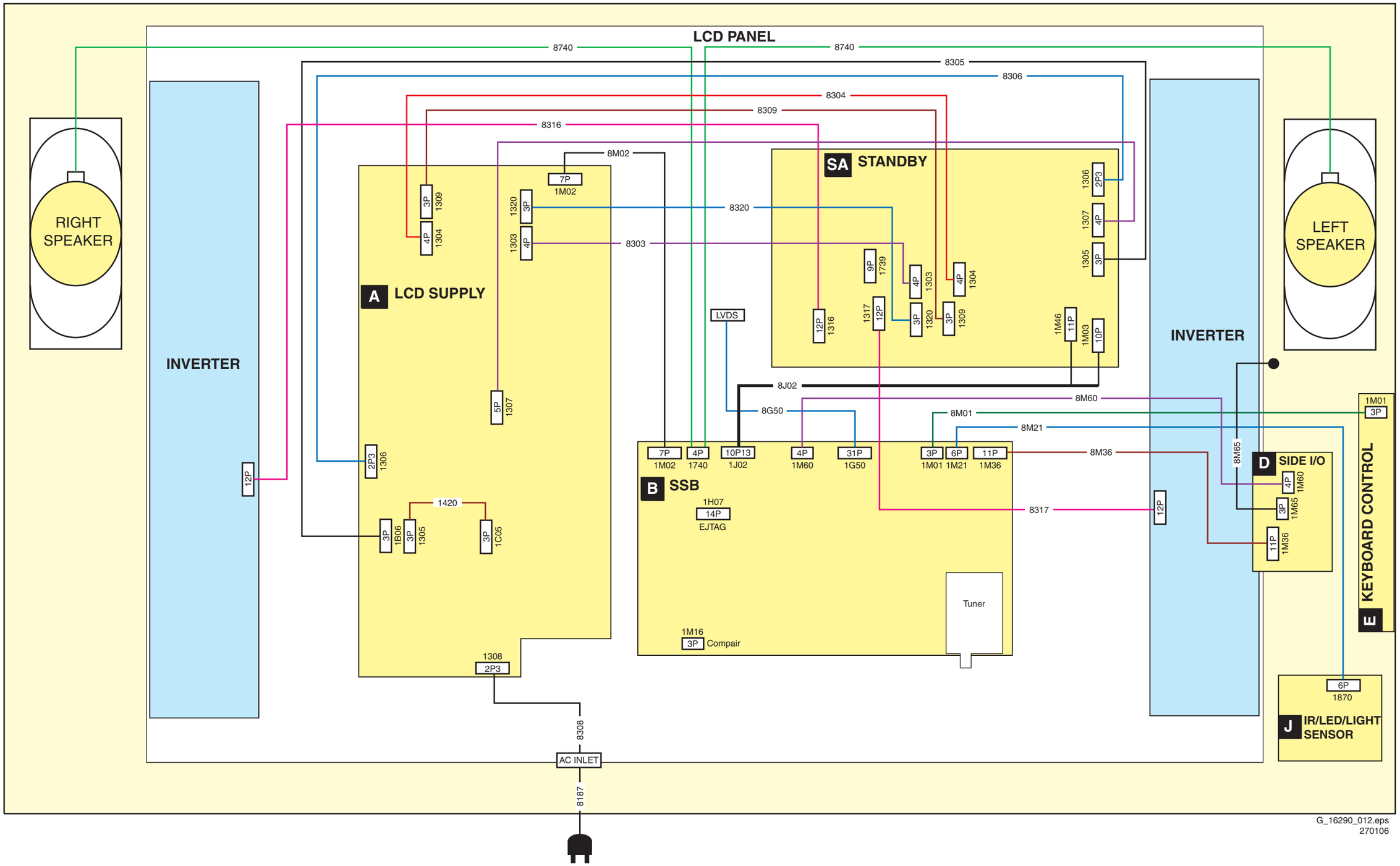

G_16290_012.eps
270106

Block Diagram Supply 32”

SUPPLY 32"

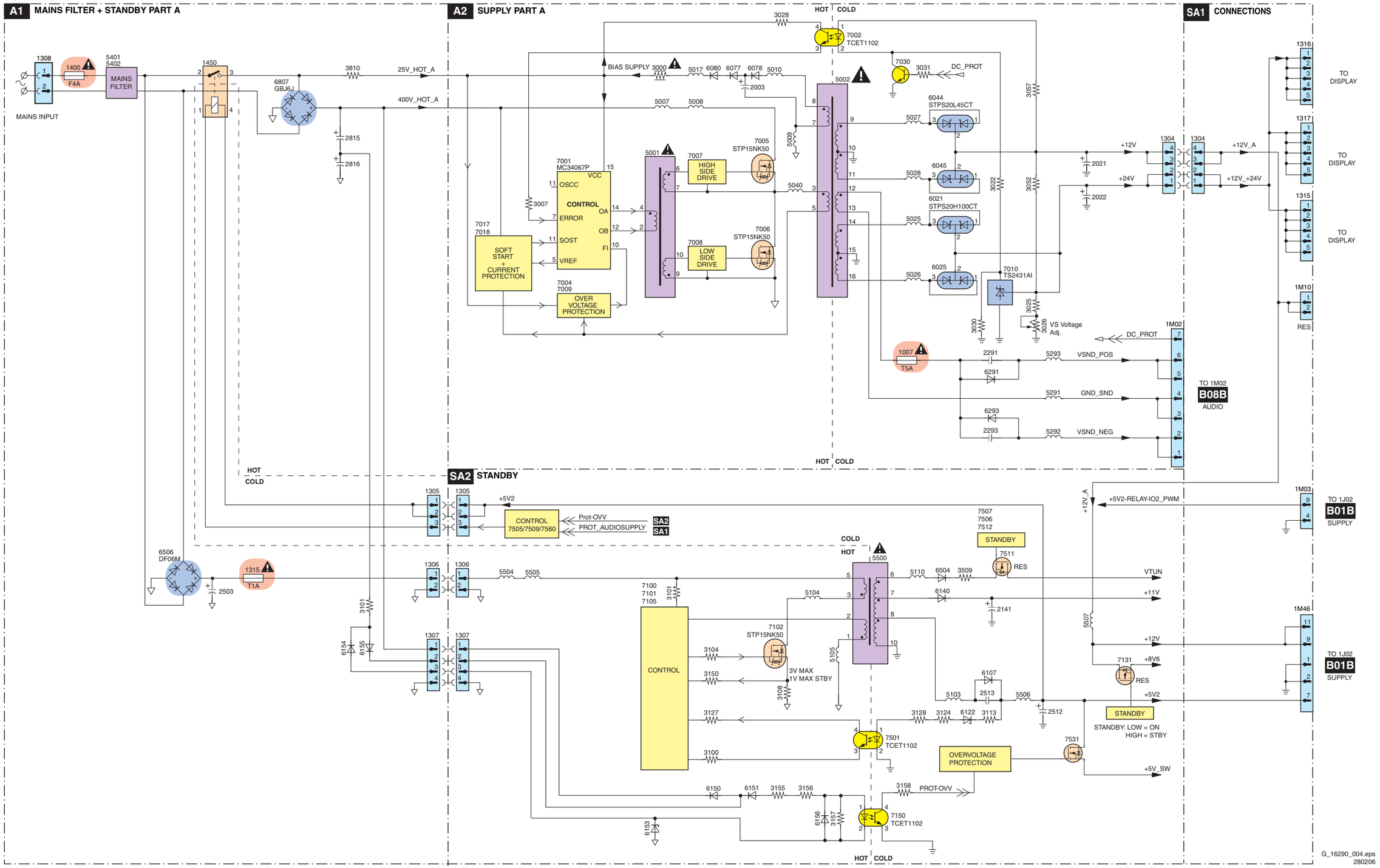

Block Diagram Supply 37”

SUPPLY 37"

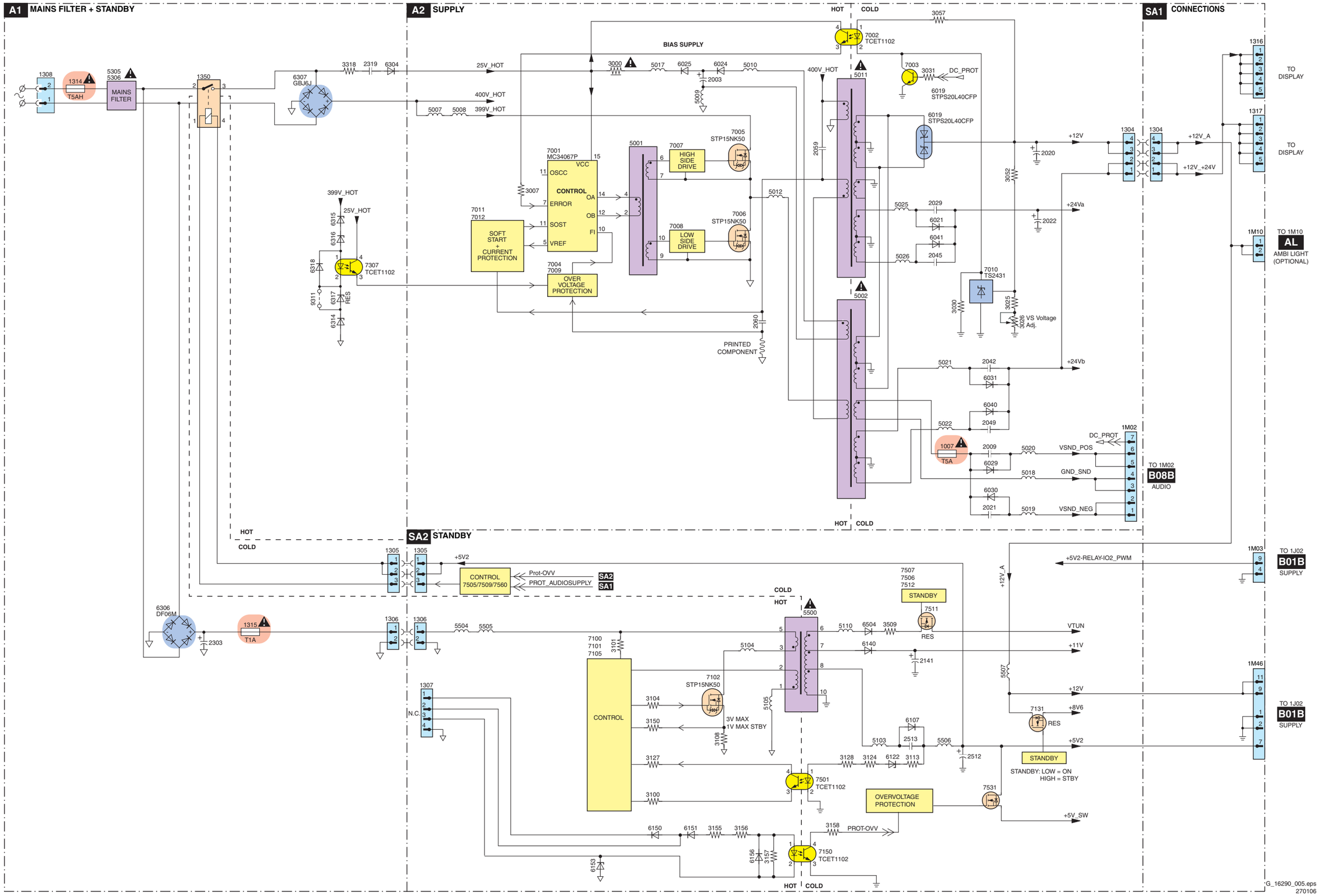

Block Diagram Supply 42”

SUPPLY 42"

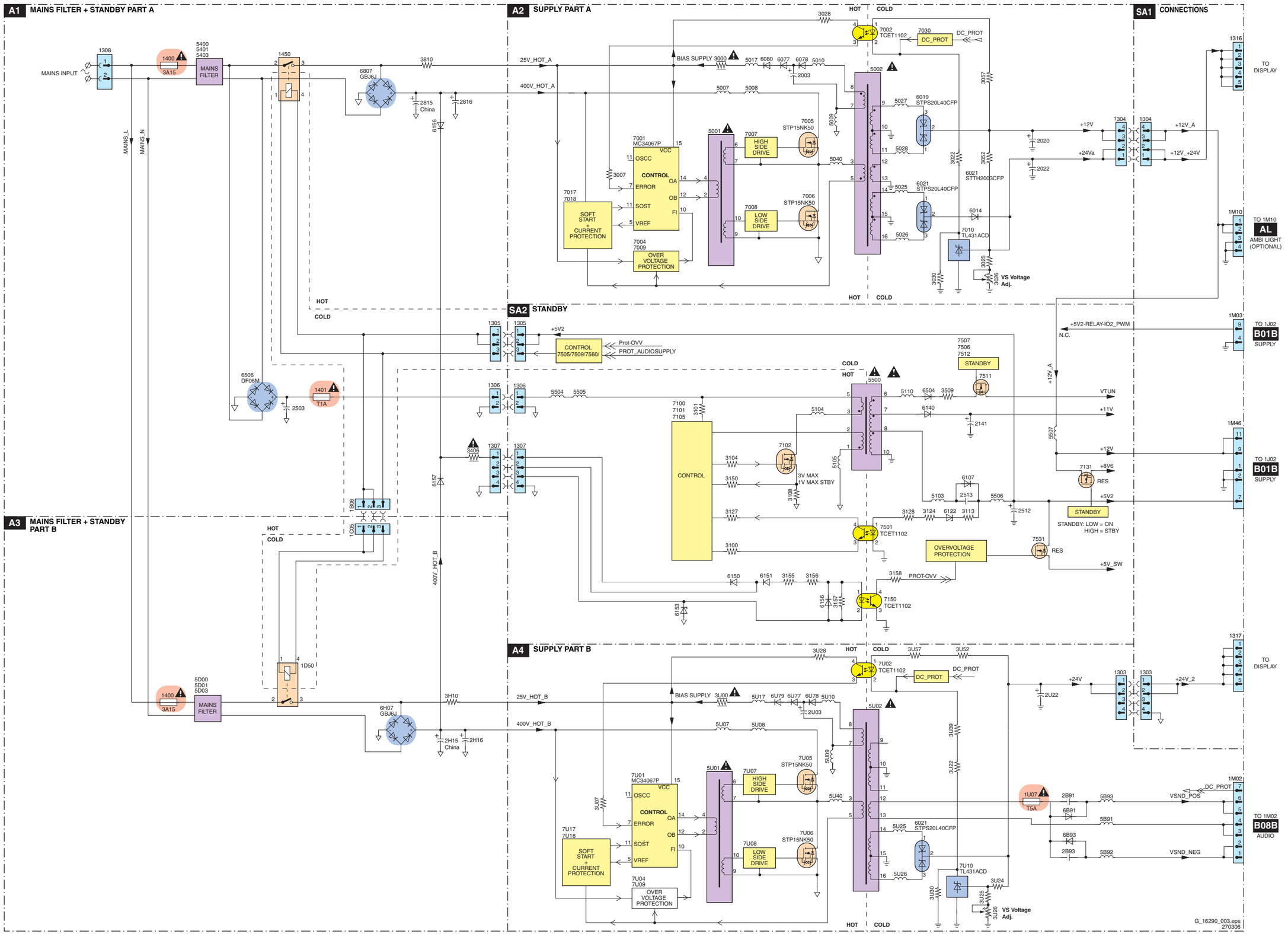

Block Diagram Video

VIDEO

B02B MAIN TUNER

1T04 TD1336/FGHP
MAIN HYBRID TUNER
IF-OUT, IF-1, IF-2, FM-T, IF-AGC
IF-ANA
1T01 SAW 44MHz
7T13 LA7795T-E (in, out, AGC CONTROL)
7T12

B02A CHANNNEL DECODER

7T22 NXT2004
DTV CABLE AND TERRESTRIAL RECEIVER
QAM 8VSB Demodulator, ADC, FEC, Micro-Controller, GPIO, QPSK Demodulator, ADC, MPEG_DATA
FAT-IF-AGC-MAIN, AUX-IF-AGC, FAT-ADC-INN, FAT-ADC-INP, FM-TRAP, IRQ-FE-MAIN
1T11 25M14
DV1F-DATA(0-7) TO B05C VIPER

D SIDE I/O

1002 (1302) VIDEO
1001 (1301) S VIDEO
FRONT_Y-CVBS_IN, FRONT_C_IN
1M36 (1304)
1M36 FRONT_Y-CVBS, FRONT_C

( ) 26" - 32"

B07C ANALOG I/O

AV1: 1I04 PR, PB, Y, VIDEO IN — PR1, PB1, Y1, AV7_Y-CVBS
AV2: 1I03 PR, PB, Y, VIDEO IN — PR, PB, Y, AV1_CVBS
AV3: 1I02 (1100) VIDEO, 1I01 S VIDEO — AV2_Y-CVBS, AV2_C
N.C., B07a, B07b

B03 MPIF MAIN:

7A00 PNX3000HL

B03C IF

IF-ANA, 1A10
VIFINP, VIFINN, SIFINP, SIFINN, CVBSOUTIF
SOUND TRAP, GROUP DELAY, LPF, BPF, QSS, QSSOUT, TO AM INTERNAL AUDIO SWITCH
7A11 EF, 3A17

B03B SUPPLY

SUPPLY, DIGITAL BLOCK
+5V, SCL-DMA, SDA-DMA
CVBS-OUTA, CVBS-OUTB, N.C.

B03A SOURCE SELECTION

CVBSOUTIF-MAIN, AV1_CVBS, AV2_Y-CVBS, AV2_C, AV7_Y-CVBS
CVBS-IF, CVBS1, CVBS2, CVBS_DTV, CVBSIY3, C3, CVBSIY4, C4, Y_COMB, C_COMB
CVBS/Y RIM, CLAMP, LPF, C-PRIM, A/D, Yuv 2FH, 2nd SIF A/D, CVBS SEC
RIPRIV_1, GIYIY_1, BIPBIU_1, RIPRIV_2, GIYIY_2, BIPBIU_2
YUV RGB, CLAMP, LEVEL ADAPT INV. PAL, Yuv 2FH, U, V, MONO SEC.
CLP PRIM, CLP SEC, CLP yuv, TIMING CIRCUIT

MPIF

DATA LINK 1: STROBE1N, STROBE1P, DATA1N, DATA1P → STROBE1N-MAIN, STROBE1P-MAIN, DATA1N-MAIN, DATA1P-MAIN
DATA LINK 3: STROBE3N, STROBE3P, DATA3N, DATA3P → STROBE3N-MAIN, STROBE3P-MAIN, DATA3N-MAIN, DATA3P-MAIN
DATA LINK 2: STROBE2N, STROBE2P, DATA2N, DATA2P → STROBE2N-MAIN, STROBE2P-MAIN, DATA2N-MAIN, DATA2P-MAIN
HV-PRM-MAIN, CLK-MPIF, AV2_FBL, AV6_VSYNC

B07A HDMI +SUPPLY

B07B HDMI: I/O + CONTROL

7B50 TDA9975HS
1I06 HDMI CONNECTOR
ARX2+, ARX2-, ARX1+, ARX1-, ARX0+, ARX0-, ARXC+, ARXC-, ARX-DCC-SCL, ARX-DCC-SDA, ARX-HOTPLUG
7B20 HPD-HIRATE B05A

HDMI
RX2+A, RX2-A, RX1+A, RX1-A, RX0+A, RX0-A, RXC+A, RXC-1 — Termination resistance control
RX2+B, RX2-B, RX1+B, RX2-B, RX0+B, RX0-B, RXC+B, RXC-B — Termination resistance control
HSCL B, HSDA B
Upsample, Derepeater, HDMI receiver, HDCP
Video output formatter, VHREF timing generator, I2C slave interface
DV4-DATA(0-7), DV5-DATA(0-7), DV4-CLK AK8
DV-HREF AH9, DV-VREF AJ9, DV-FREF AK9
SDA-MM-BUS1, SCL-MM-BUS1
Line time measuremebt, Activity detection & sync selec., Sync seperator, Slicers, Clocks generator, ADC
HSYNC, VSYNC, G/Y, R/PR, G/Y, B/PB
H-SYNC-VGA, V-SYNC-VGA, Y, Y1, PR, PR1, Y, Y1, PB, PB1

B04 PNX 2015:

7J00 PNX2015E

B04C TUNNELBUS

PNX2015
North tunnel, South tunnel

B04A AUDIO/VIDEO

Memory based scaler, VO-2, MUX, VO-1
AVP1_DLK1SN, AVP1_DLK1SP, AVP1_DLK1DN, AVP1_DLK1DP — DATA LINK 1 → AVIP-1
AVP1_DLK3SN, AVP1_DLK3SP, AVP1_DLK3DN, AVP1_DLK3DP — DATA LINK 3 → COLUMBUS 3D Comb filter and noice reduction
AVP1_DLK2SN, AVP1_DLK2SP, AVP1_DLK2DN, AVP1_DLK2DP — DATA LINK 2 → AVIP-2
AVP1_HVINFO1, MPIF_CLK, AVP2_HSYNCFBL2, AVP2_VSYNC2
Video MPEG decoder
DV1_DATA(0-9), DV2_DATA(0-9), DV3_DATA(0-9)

B04B DV I/O INTERFACE

DV4_DATA_0 TO 9, DV5_DATA_0 TO 9 → VIP
RGB_HSYNC, RGB_VSYNC, RGB_CLK_IN, RGB_UD, RGB_DE
RIN (0-9), GIN (0-9), BIN (0-9)
LVDS_TX
LVDS_AN, LVDS_AP, LVDS_BN, LVDS_BP, LVDS_CN, LVDS_CP, LVDS_CLKN, LVDS_CLKP, LVDS_DN, LVDS_DP, LVDS_EN, LVDS_EP

B04E PNX 2015: STANDBY & CONTROL

7LA7 M25P05 512K FLASH
5_SPI-SDO AK10, 6_SPI-CLK AH10, 1_SPI-CSB AG10, 3_SPI-WP AJ27
B04E STANDBY: STANDBY PROCESSOR, See Block digram Control
1LA0 16M: AJ12, AH12

B04D DDR INTERFACE

Memory controller
PMX-MA(0-12), PNX-MDATA (0-15)
PMX-MA, PNX-MDATA
A17 PNX-MCLK-P 45, A16 PNX-MCLK-N 46
7L50 K4D261638F DDR SDRAM 128Mx16

B05 VIPER:

7V00 PNX8550

B05C TUNNELBUS

TUN-VIPER-RX-DATA, TUN-VIPER-TX-DATA, TUN-VIPER-RX-DATA, TUN-VIPER-RX-DATA, TUN-VIPER-TX-CLKN, TUN-VIPER-TX-CLKP
Tunnel

B05B MAIN MEMORY

VIPER
Memory controller, DVD CSS, 2D DE

B05C AUDIO/VIDEO

2-Layer secondary video out
Dual SD single HD MPE2 decoder
250Mhz MIPS32 CPU
Scaler and de-interlacer
Temporal noise redux
Video TS router
1SD+1HD YUV Video in
Dual con acces
5 Layer primary video out HD/VGA/656
AF30 DV2A-CLK, AK28 DV3F-CLK
From B02A CHANNEL DECODER
DV1F-DATA(0-7), DV3F-DATA (0-7)
C4 1H00 27M, A2
DV-OUT-HS, DV-OUT-VS, DV-CLKIN, DV-OUT-FFIELD, DV-OUT-DE
MP-OUT-HS, MP-OUT-VS, MP-CLKOUT, MP-OUT-FFIELD, MP-OUT-DE
DV-OUT-VS, DV-CLK-IN, DV-OUT-DE
MP-ROUT(0-9), DV-ROUT
MP-GOUT(0-9), DV-GOUT
MP-BOUT(0-9), DV-BOUT

B05B VIPER: MAIN MEMORY

7V01 K4D551638F DDR SDRAM 1 8Mx16
7V02 K4D551638F DDR SDRAM 2 8Mx16
MM_DATA, MM_A(0-12)

B06 VIDEO-DAC

7G40 ADV7123KSTZ140
VIDEO DAC
DV-ROUT, DV-GOUT, DV-BOUT
1D50 ANALOG OUTPUT (Reserved for PTV)
AV-ROUT 34, AV-GOUT 32, AV-BOUT 28
(Reserved for PTV)

B04G VIPER/PNX 2015: DISPLAY INTERFACE

1G50 — 1P06 (26" LCD)
VDISP
B26 TXPNXA-, C26 TXPNXA+
A25 TXPNXB-, B25 TXPNXB+
D25 TXPNXC-, E25 TXPNXC+
C23 TXPNXCLK-, D23 TXPNXCLK+
B24 TXPNXD-, C24 TXPNXD+
E24 TXPNXE-, F24 TXPNXE+
5J50, 5J52, 5J54, 5J56, 5J58, 5J60
CTRL-DISP1, CTRL-DISP2, CTRL-DISP3, CTRL-DISP4, SCL-I2C4, SDA-I2C4
ONLY FHP SETS
LVDS CONNECTOR TO SCREEN

G_16290_006.eps
020206

Block Diagram Audio

AUDIO

B02B MAIN TUNER

1T04 TD1336/FGHP
MAIN HYBRID TUNER
12 IF-ANA

B02A
7T22 NXT2004
DTV CABLE AND TERRESTRIAL RECEIVER
FOR MORE MORE DETAILS SEE ALSO BLOCK DIAGRAM VIDEO AND CONTROL
DV1F-DATA(0-7)

D SIDE I/O

1002 (1302)
AUDIO IN L+R
L
R
1M36 (1304) 6 8
( ) 26" - 32"

B07C ANALOG I/O

1I04 AV1 AUDIO IN L+R
AUDIO-IN4-R
AUDIO-IN4-L
1I03 AV2 AUDIO IN L+R
AUDIO-IN1-R
AUDIO-IN1-L
1I00 AV3 AUDIO IN L+R
AUDIO-IN2-R
AUDIO-IN2-L
B03d
1I02 (1I00) AV3 DIGITAL AUDIO OUT
SPDIF-OUT1

B03 MPIF MAIN:

7A00 PNX3000HL
B03C IF
1A10
7 107 VIFINP
8 108 VIFINN
SEE ALSO BLOCKDIAGRAM VIDEO
99 SIFINP
100 SIFINN
B03D AUDIO SOURCE SELECTIOM
MPIF
AUDIO SWITCH
LPF
A/D
DLINK1
DLINK2
AM SOUND
AUDIO AMPS
AUDIO SWITCH (DIGITAL OUT)
AUDIO SWITCH (ANALOG OUT)
DATA LINK
DSND
AUDIO-IN5-L 128 L5
AUDIO-IN5-R 127 R5
AUDIO-IN1-R 85 R1
AUDIO-IN1-L 86 L1
AUDIO-IN2-R 83 R2
AUDIO-IN2-L 84 L2
AUDIO-IN4-L 80 L4
AUDIO-IN4-R 79 R4
LINE / SCART L/R
AUDIO-OUT1-R 70
AUDIO-OUT1-L 69
B3f

DATA LINK 1
DATA LINK 2
DATA LINK 3
72 DSNDR2
73 DSNDL2
74 DSNDR1
75 DSNDL1
40 CLK-MPIF

B4 PNX2015

7J00 PNX2015E
PNX2015
I2D
DEM DEC
AUDIO PROCESSING
ADAC1
ADAC2
AVIP
AH1
AG1
AC3 ADCAC12
AD3 ADCAC11
AE3 ADCAC10
AF3 ADCAC19
M4
ADAC7
ADAC8
AB1
AA1

B08A AUDIO: AMPLIFIER

+12_20V
7D2O÷7D21
7D18
-12_20V
7D10-02
7D10-3
CONTROL
LEFT-SPEAKER
RIGHT-SPEAKER
FEEDBACK-LR
FEEDBACK
FEEDBACK-RL
7D10-01
7D11
PROT-AUDIOSUPPLY
B04E
INV-MUTE
7D14÷7D16
7D23
MUTE
SOUND-ENABLE B05A
7D26
7D25
U-VOLT-DETECT
( ) For 26" LCD

B08B AUDIO: CONNECTORS

1740
Speaker L 15W/8Ω
Speaker R 15W/8Ω
5M02
5M03
1M02
From 1M02 A SUPPLY OR From CN1M02 PDP SUPPLY
(-12-16V-NF)
(+12-16V-NF)
-12_20V
5M10
5M11
5M12
5M09

B03E MPIF MAIN: AUDIO AMPLIFIER

7A04-1
7A04-2
ADAC7
ADAC8
AUDIO-HDPH-L-AP
AUDIO-HDPH-R-AP
A-PLOP
CONTROL

B03A MPIF MAIN: VIDEO SOURS SELECTION

1M36 (1304) 10 11 7 N.C.

D SIDE I/O

1010 (1303)
SOUND L-HEADPHONE-OUT
SOUND R-HEADPHONE-OUT
DETECT
Headphone Out 3.5mm
( ) 26" - 32"

B05 VIPER:

7V00 PNX8552EH
B5C
VIPER
I2S_IN1_WS T29 I2S-WS-MAIN V3
I2S_IN1_SCK T30 I2S-BCLK-MAIN V2
I2S_OUT2_SD0 T28 I2S-MCH-LR U2
I2S_OUT2_SD1 T27 I2S-MCH-CSW U3
I2S_OUT2_SD2 R30 I2S-MCH-SLR U4
I2S_OUT1_SD0 U27 I2S-SUB-D V5
I2S_OUT2_SD3 R29 I2S-MAIN-D V4
I2S OUT
I2S IN
SPDIF-OUT1 AB29

B05B VIPER: MAIN MEMORY

7V02
7V01
K4D551638F 2X DDR SDRAM 8Mx16
MM_DATA
MM_A(0-12)
B05B MAIN MEMORY
DDR INTERFACE
AA27 SPDIF-HDMI

B07A HDMI +SUPPLY

1I06
HDMI CONNECTOR
PARX2+
AUDIO MULTIPLEXED WITH VIDEO SEE ALSO BLOCKDIAGRAM VIDEO

B07B HDMI: I/O + CONTROL

7B50 TDA9970HS
RX2+ RX2-
RX1+ RX1-
RX0+ RX0-
RXC+ RXC-
Termination Resistance Control
HDMI receiver
HDCP
Audio PLL
Audio FIFO
Audio Formatter
Packet extraction
183 SPDIF-HDMI
DV4-DATA
DV5-DATA
DV INPUT

G_16290_007.eps
020206

Block Diagram Control & Clock Signals

CONTROL + CLOCK SIGNALS

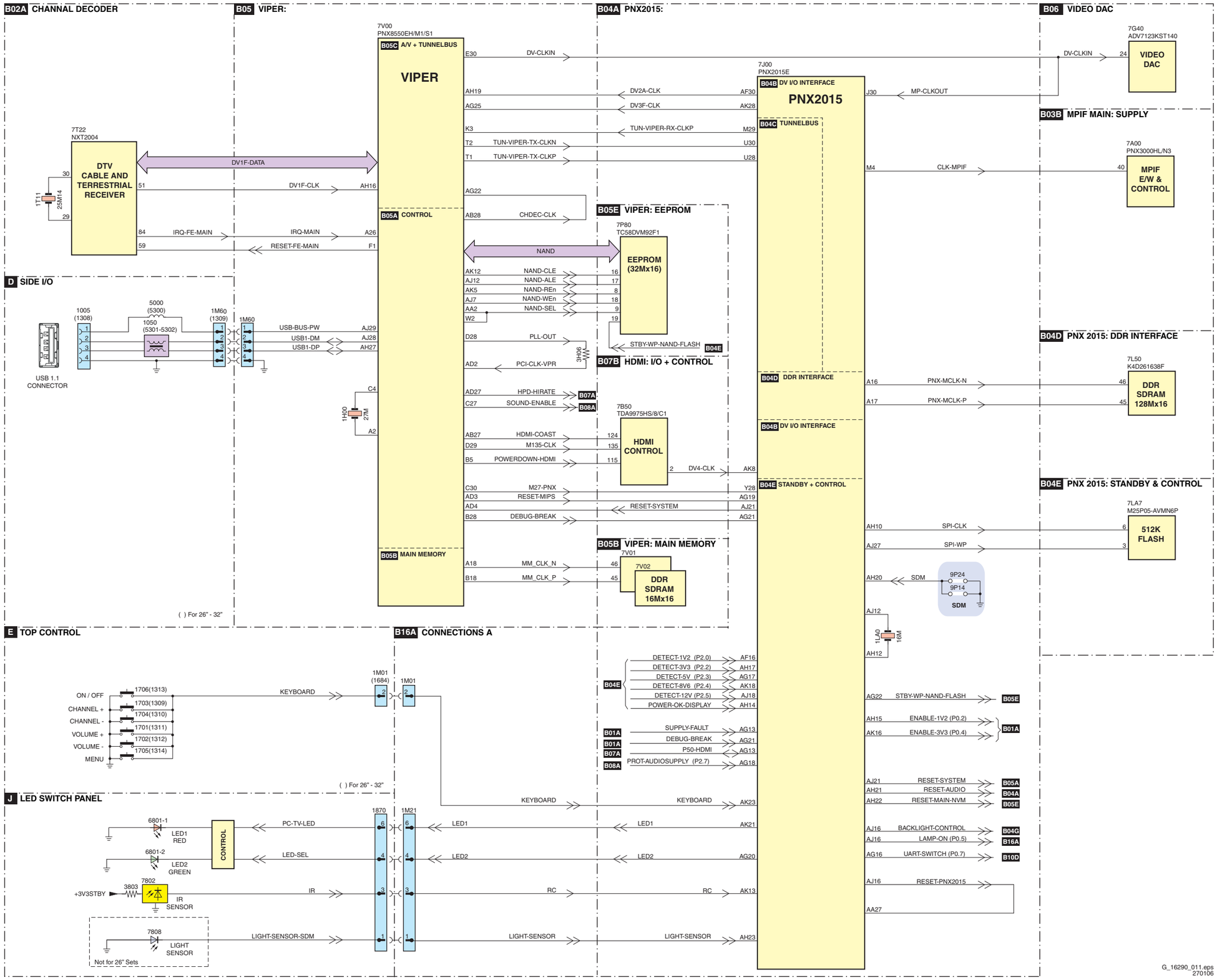

I2C IC's Overview

I²C

B05A VIPER: CONTROL

+3V3
3H22 3H23
I2C1-SDA A25 3Q11 SDA-MM
I2C1-SCL C25 3Q10 SCL-MM
PROT 01
7V00-5
SM PNX8552EH
VIPER
F26 TXD-VIPER
E27 RXD-VIPER
B27 EJTAG-TDI
D25 EJTAG-TDO
A29 EJTAG-TMS
A28 EJTAG-TCK
C2 JTAG-TRST
AD4 RESET-SYSTEM
PROT 05
PROT 53
B01B

B07A HDMI + SUPPLY

SDA-MM
SCL-MM
1I06
16 ARX-DDC-SDA 3Q11
15 ARX-DDC-SCL 3Q10
3B08 3B07
5 6
7B02
M24C02
EEPROM
2x HDMI
CONNECTOR

B07B HDMI: I/O + CONTROL

3B61 3B60
142 143
PARX-DDC-SDA 145
PARX-DDC-SCL 146
7B50-1
TDA9970HS
HDMI
CONTROL
ERR 43
JTAG-TRST 107

B01B SUPPLY + RS232

1H07
JTAG-TRST 1
EJTAG-DETECT 2
EJTAG-TDI 3
EJTAG-TDO 5
EJTAG-TMS 7
EJTAG-TCK 9
RESET-SYSTEM 11
EJTAG CONNECTOR (FACTORY USE ONLY)
9U07
RES
B5A

B03B MPIF MAIN: SUPPLY

+3V3
3H04 3H05
I2C2-SDA AF29 3Q13 SDA-DMA
I2C2-SCL AD26 3Q12 SCL-DMA
PROT 02
3A15 3A14
43 44
7A00-3
PNX3000HL
MPIF
ERR 32
ERR 18

B04E PNX 2015: STANDBY & CONTROL

SDA-DMA
SCL-DMA
3LG9 3LF8 3LH4 3LH3 3LH1 3LH0
AG9 AF9 G5 G4 B27 C27
7J00-6
PNX2015E
CONTROL
COLUMBUS AVIP HD
ERR 45 ERR 29 ERR 31 ERR 27
AF11 JTAG-TRST
AF21 EJTAG-DETECT
AJ21 RESET-SYSTEM
7L50
K4D261638F
DDR
SDRAM
16Mx16

B02A CHANNEL DECODER

+3V3
7T23
PCA9515ADP
3T53 3T54
2 6
3 7
RES
3T52 43
3T51 42
7T22
NXT2004
DTV
RECEIVER
ERR 41
9T11 9T10
9T12 9T13
90 91

B02B MAIN TUNER

+5VTUN
3T25 3T28
I2C-SDA-TUNER
I2C-SCL-TUNER
3T22 3T23
9 8
1T04
TD1336/FGHP
MAIN
DIG TUNER
ERR 34

B05B VIPER: MAIN MEMORY

7V01
K4D551638F
DDR
SDRAM 1
7V02
K4D551638F
DDR
SDRAM 2

B05E VIPER: EEPROM

+3V3-STANDBY
3LE4 3LE3
I2C3-SDA AE27 3Q15 SDA-UP-VIP
I2C3-SCL AG29 3Q14 SCL-UP-VIP
PROT 03
3LF0 3LE2
AG26 AH26
5 6
7P80
TC58DVM92F1TGI0
EEPROM
32Mx16
RESET-MAIN-NVM
7P18
8
7P14
M24C64
EEPROM
MAIN
NVM
ERR 44
TXD-UP 3LJ1 AJ19
RXD-UP 3LJ0 AK19
B05E
7LA7
M25P05-AVMN6P
DDR
SDRAM
16Mx16
7J00-5
PNX2015E
PNX2015
STANDBY
ERR 26
AG16 3LM7 UART-SWITCH
+3V3-STANDBY
AF14 3LH8 SCL-UP-SW 3LC7
AG14 3LH9 SCL-UP-SW 3LC6

B05E VIPER: EEPROM

7P15
74HC4066PW
B5A TXD-VIPER 10
B4E TXD-UP 9
B4E RXD-UP 2
B5A RXD-VIPER 3
8 11 1 4
7P16
UART-SWITCHn 5 12
7P17
6 13

B07D UART

1M16
TXD 3I10 1
RXD 3I11 3
2
COMPAIR SERVICE CONNECTOR (UART)

B04G VIPER/PNX 2015: DISPLAY INTERFACE

+3V3
3Q04 3Q03
I2C4-SDA A3 3H99 SDA-I2C4
I2C4-SCL B4 3H98 SCL-I2C4
PROT 04
SDA-I2C4 3J31
SCL-I2C4 3J30
1G50
31
30
TO DISPLAY
ERR 64
(OPTIONAL ONLY PDP SETS)

G_16290_008.eps
300106

Supply Lines Overview

SUPPLY LINES OVERVIEW

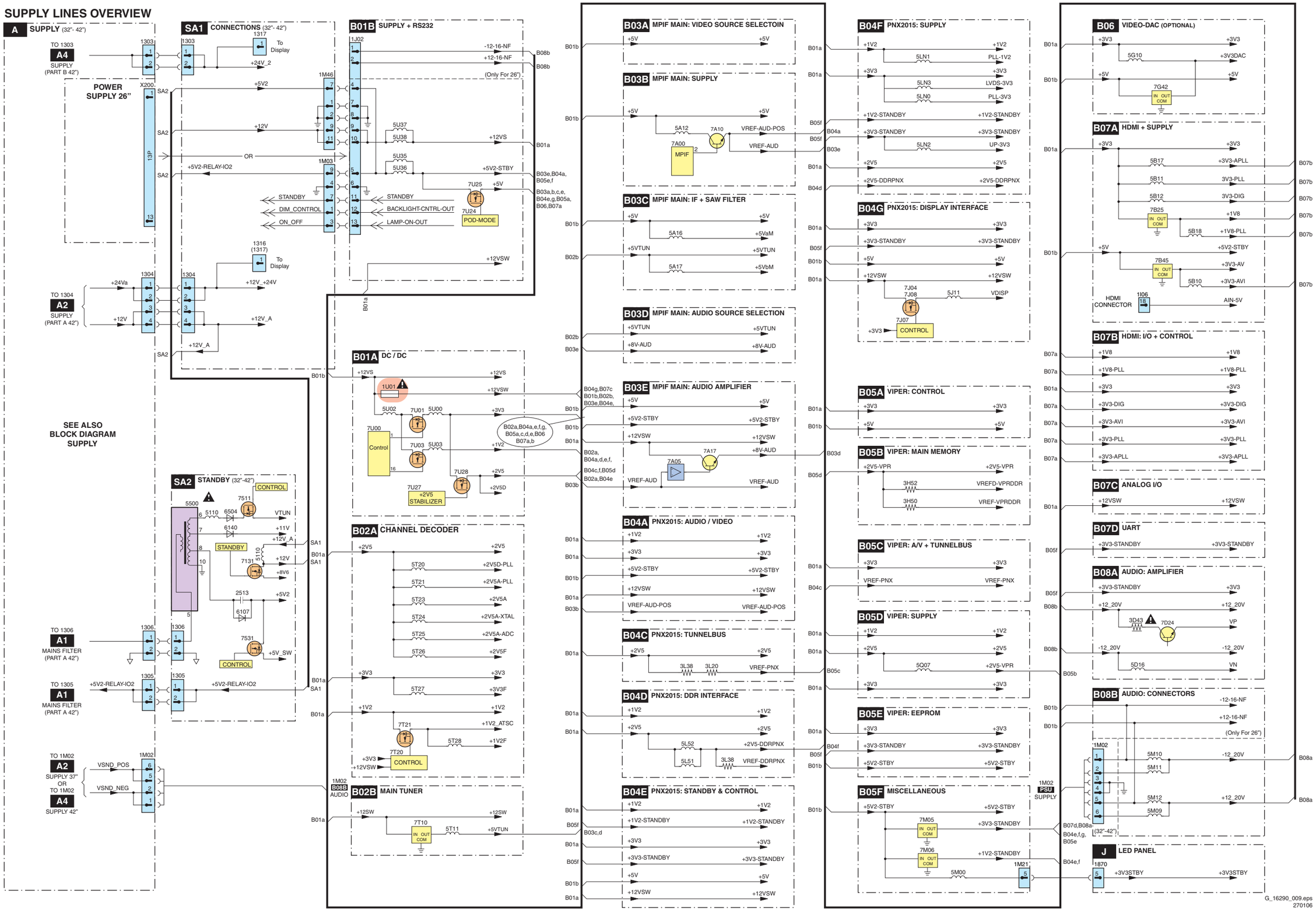

7. Circuit Diagrams and PWB Layouts

LCD Supply (32”): Mains Filter + Standby

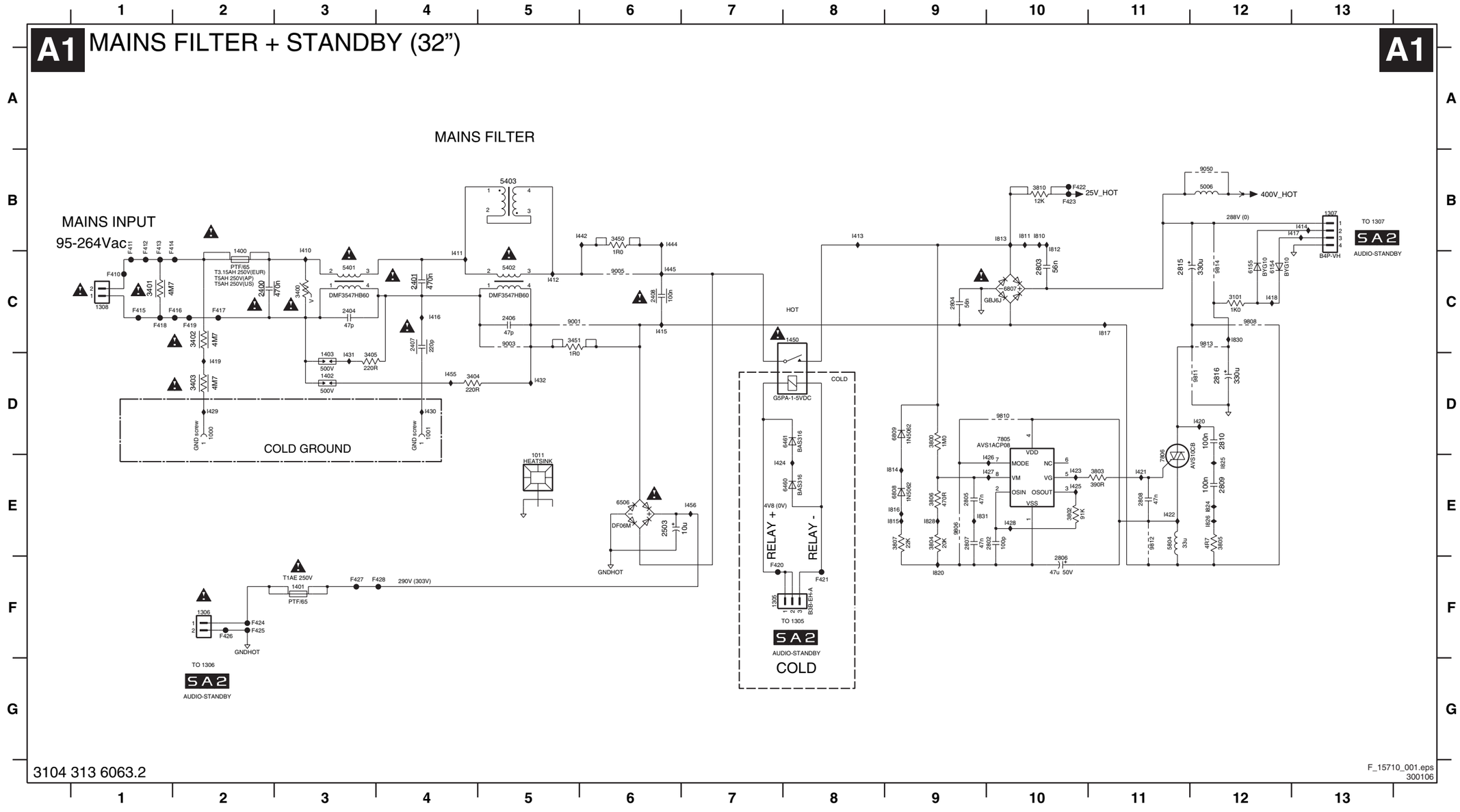

1000 D2
1001 D4
1011 E5
1305 F7
1306 F2
1307 B13
1308 C1
1400 C2
1401 F3
1402 D3
1403 D3
1450 C8
2400 C2
2401 C4
2404 C3
2406 C5
2407 C4
2408 C6
2503 E6
2802 E10
2803 C10
2804 C9
2805 E9
2806 F10
2807 E9
2808 E11
2809 E12
2810 D12
2815 C11
2816 D12
3101 C12
3400 C3
3401 C1
3402 C2
3403 D2
3404 D4
3405 D3
3450 B6
3451 C5
3800 D9
3802 E10
3803 E11
3804 E9
3805 E12
3806 E9
3807 E9
3810 B10
5006 B12
5401 C3
5402 C5
5403 B5
5804 E11
6154 C12
6155 C12
6460 E8
6461 D8
6506 E6
6807 C10
6808 E9
6809 D9
7805 D10
7806 E11
9001 C5
9003 C5
9005 C6
9050 B12
9806 E9
9808 C12
9810 D10
9811 D12
9812 E11
9813 C12
9814 C12
F410 C1
F411 B1
F412 B1
F413 B1
F414 B1
F415 C1
F416 C2
F417 C2
F418 C1
F419 C2
F420 F7
F421 F8
F422 B10
F423 B10
F424 F2
F425 F2
F426 F2
F427 F3
F428 F4
I410 B3
I411 C4
I412 C5
I413 B8
I414 B13
I415 C6
I416 C4
I417 B13
I418 C12
I419 D2
I420 D12
I421 E11
I422 E11
I423 E10
I424 E7
I425 E10
I426 E10
I427 E10
I428 E10
I429 D2
I430 D4
I431 D3
I432 D5
I442 B6
I444 B6
I445 C6
I455 D4
I456 E7
I810 B10
I811 B10
I812 B10
I813 B10
I814 E9
I815 E9
I816 E9
I817 C11
I820 F9
I824 E12
I825 E12
I826 E12
I828 E9
I830 C12
I831 E9

LCD Supply (32”): Supply

A2 SUPPLY (32”)

BIAS SUPPLY

CONTROL

VS-CONTROLLER

HIGH SIDE DRIVE

LOW SIDE DRIVE

SOFTSTART CONTROL

CURRENT PROTECTION

HOT GROUND

COLD GROUND

ONLY FOR 32" SHARP

TO 1M02 SA3 AUDIO - STBY

TO 1304 SA1 AUDIO - STBY

TO 1309 SA1 AUDIO - STBY

3104 313 6063.2

F_15710_002.eps 300106

1007 G10	3044 A13	F010 H12	I138 H6	
1009 H10	3045 F6	F012 D11	I139 G6	
1010 H11	3046 F6	F014 F12	I140 G6	
1012 H11	3047 H5	F016 B11	I141 H3	
1304 H13	3048 D2	F017 D11	I142 H3	
1309 I13	3049 A12	F018 B7	I143 H3	
1M02 G13	3050 E3	F021 A11	I145 E7	
2000 E9	3051 B12	F022 A12	I146 A3	
2002 A2	3052 C12	F023 F9	I147 A4	
2003 A5	3053 E3	F024 D11	I148 A5	
2004 C2	3054 C12	F025 D11	I149 A9	
2005 D2	3055 I7	F027 C11	I150 B13	
2006 C2	3056 I6	F028 C11	I290 G11	
2007 E2	3057 A12	F029 D8	I291 G11	
2008 F4	3058 E2	F290 G12	I292 H10	
2009 D1	3059 A13	F292 G12	I293 H11	
2010 H3	3061 E4	F293 G12	I294 C8	
2011 E9	3064 F3	F294 H12	I295 H7	
2012 E8	3065 E4	F295 H12	I296 G7	
2013 C8	3066 F2	F296 G13	c001 F8	
2014 F9	3067 H2	F297 G12	c002 F8	
2015 F5	3068 G5	F298 H12		
2016 E4	3069 A10	F299 B7		
2017 D9	3070 H5	F300 F9		
2018 F6	3071 H6	I001 B8		
2019 H4	3075 G6	I002 B9		
2020 C11	3089 H7	I003 B6		
2021 B11	3100 A9	I004 D7		
2022 E11	3292 G10	I005 A10		
2023 A12	3999 A11	I006 B2		
2024 E12	5001 C6	I007 C2		
2025 E13	5002 C9	I008 C2		
2026 G3	5004 C8	I009 C2		
2027 E3	5005 C9	I010 D2		
2028 B10	5007 B8	I011 H7		
2029 D11	5008 B8	I012 D4		
2030 F12	5009 B5	I013 A13		
2031 B12	5010 A6	I014 A13		
2032 E13	5013 D8	I015 A13		
2033 E13	5015 C5	I016 A12		
2034 C1	5016 D5	I017 B13		
2035 C2	5017 A3	I018 E3		
2036 A13	5025 D10	I020 E3		
2037 B13	5026 E10	I021 E2		
2038 D11	5027 B10	I022 F3		
2039 B10	5028 C10	I023 F3		
2040 C1	5040 D9	I024 F4		
2041 D13	5041 E8	I025 F2		
2042 D13	5291 G11	I027 C3		
2043 D13	5292 H11	I028 G3		
2044 C10	5293 G11	I029 G4		
2045 E11	6001 D2	I033 F5		
2046 I6	6002 D7	I034 F8		
2047 I7	6003 C6	I036 F6		
2048 I6	6004 C5	I037 C7		
2050 E3	6005 D5	I038 B8		
2051 D13	6006 I6	I039 D6		
2052 D13	6007 C7	I042 B7		
2053 D13	6008 D6	I045 C6		
2060 C6	6009 H3	I046 C7		
2061 B7	6010 F4	I051 E7		
2062 D6	6011 F4	I052 D6		
2063 C5	6012 E7	I055 F8		
2064 D5	6013 C8	I057 E7		
2065 D7	6014 H7	I059 E7		
2071 E7	6015 G7	I062 A10		
2072 C7	6017 I7	I063 A10		
2077 H6	6020 H3	I064 B6		
2290 G10	6021 D11	I070 B10		
2291 G11	6022 H4	I072 C10		
2292 G11	6023 E13	I073 D10		
2293 H11	6025 E11	I074 D10		
2294 H11	6027 C7	I076 E10		
3000 A2	6028 E7	I077 D10		
3001 G5	6030 A12	I080 F10		
3002 C1	6044 B10	I081 F9		
3003 C1	6045 C10	I084 F9		
3004 D1	6051 H5	I085 E12		
3005 C3	6054 A13	I088 E13		
3006 D2	6077 A5	I089 E12		
3007 E2	6078 A6	I092 F13		
3008 E2	6079 A4	I093 F13		
3009 E2	6080 A4	I094 F12		
3010 H4	6081 A2	I095 A4		
3011 H4	6082 A3	I096 A3		
3012 F3	6291 G11	I097 A3		
3013 F4	6293 G11	I098 A5		
3014 B7	7001 C3	I099 A6		
3015 C7	7002 A9	I100 A6		
3016 C7	7004 H6	I101 A6		
3017 D7	7005 C8	I103 C1		
3018 E7	7006 D7	I104 D2		
3019 F6	7007 C7	I105 E3		
3020 E6	7008 F7	I106 G5		
3021 F6	7009 G6	I107 C5		
3022 C11	7010 E12	I108 D5		
3023 E12	7017 F3	I109 C7		
3024 E13	7018 F3	I110 D8		
3025 F13	7030 A10	I111 C8		
3026 G13	7031 B13	I112 E8		
3027 G3	9002 G13	I113 E8		
3028 E6	9004 B5	I114 D9		
3029 C7	9008 A4	I116 C10		
3030 F11	9009 A3	I117 C10		
3031 A11	9010 C11	I119 C12		
3032 B10	9015 H3	I120 C12		
3033 A5	9024 C8	I121 E13		
3034 F13	9025 E7	I122 E13		
3035 C7	F001 H12	I123 F10		
3036 A13	F002 C8	I124 G10		
3037 C12	F003 C4	I131 I8		
3038 E13	F004 D4	I132 I7		
3039 A13	F005 D8	I133 I6		
3040 E13	F006 I12	I134 I5		
3041 F13	F007 F3	I135 G5		
3042 B13	F008 D5	I136 H5		
3043 D1	F009 D5	I137 G5		

Layout LCD Supply (32”) (Top Side)

1000 A1	1304 A10	1401 A4	2003 A6	2014 A7	2294 C10	2503 A4	2816 A6	3033 A6	3403 A1	3807 B4	5007 B6	5017 A5	5291 B10	6021 B9	6807 C3	7805 B4	9007 A8	9017 A5	9024 C6	9033 A9	9040 B9	9047 C10	9090 A10	9812 C4
1001 A3	1305 A3	1402 A2	2004 A6	2017 B6	2400 C2	2803 B3	3000 A5	3050 A5	3404 A2	3810 A4	5008 C5	5025 B9	5292 C10	6025 B10	6808 A4	7806 C4	9010 A10	9018 A6	9025 B7	9034 A10	9041 B9	9050 A5	9091 A9	9813 B5
1007 B10	1306 A4	1403 B1	2005 A6	2020 C8	2401 B1	2804 B4	3014 B6	3053 A5	3405 B1	5001 B6	5009 B7	5026 A9	5293 B10	6044 C10	6809 A4	9001 A3	9011 A8	9019 A6	9026 C8	9035 B8	9042 B10	9080 A7	9092 A7	9814 A5
1009 B9	1307 A5	1450 A3	2010 A7	2021 C8	2404 B1	2806 B4	3015 C5	3058 A5	3450 A2	5002 A7	5010 B6	5027 C9	5401 B2	6045 C10	7001 A6	9003 A3	9012 C8	9020 B7	9027 B9	9036 B9	9043 B10	9081 C2	9093 A7	
1010 C9	1308 C1	1M02 B10	2011 B7	2022 A8	2406 A3	2809 C4	3017 C7	3400 C2	3451 A2	5004 C6	5013 C7	5028 C9	5402 A1	6291 A9	7002 A7	9004 A7	9013 B8	9021 A6	9028 B9	9037 B8	9044 C9	9086 B10	9098 B3	
1011 C3	1309 A8	2000 A7	2012 C7	2038 A9	2407 A3	2810 C4	3018 C7	3401 C2	3800 A4	5005 C6	5015 A6	5040 B6	5403 A2	6293 A10	7005 C6	9005 B3	9014 B1	9022 C3	9031 A9	9038 A9	9045 C9	9087 B9	9808 B5	
1012 A9	1400 C1	2002 A7	2013 C6	2292 A10	2408 B3	2815 A3	3026 A9	3402 A1	3805 C4	5006 A4	5016 A6	5041 C7	5804 B4	6506 A4	7006 C7	9006 C10	9016 A7	9023 C3	9032 A9	9039 A9	9046 C9	9088 A10	9811 B5	

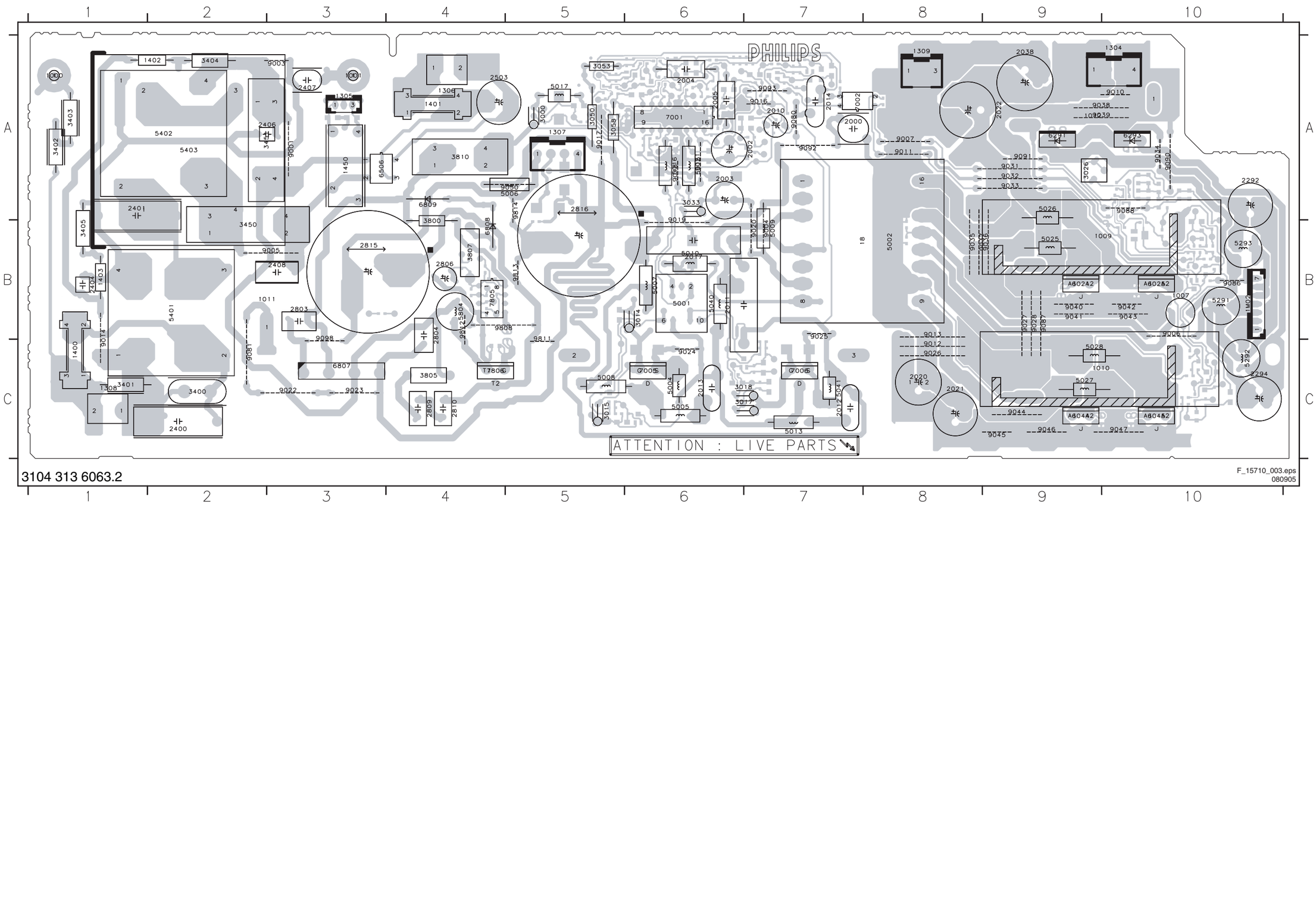

Layout LCD Supply (32”) (Overview Bottom Side)

2006 A5	2019 A5	2029 B2	2036 C1	2044 C1	2052 A1	2065 C4	2802 B7	3004 A5	3011 A5	3022 B1	3030 B1	3038 B1	3045 A5	3054 C1	3065 A6	3075 A4	3804 B7	6005 A5	6012 B4	6023 A1	6078 B5	6460 A8	7017 A5	9015 A4
2007 A6	2023 B1	2030 B1	2037 C1	2045 B1	2053 A1	2071 C4	2805 B7	3005 A5	3012 A5	3023 B1	3031 B1	3039 C1	3046 A4	3055 A4	3066 A5	3089 A4	3806 B7	6006 A5	6013 C5	6027 C6	6079 A5	6461 A8	7018 A5	9030 A1
2008 A5	2024 B1	2031 A1	2039 B1	2046 A4	2060 C6	2072 C5	2807 B7	3006 A5	3013 A5	3024 A1	3032 B1	3040 B1	3047 A4	3056 A4	3067 A4	3100 A4	3999 B8	6007 B6	6014 A4	6028 C4	6080 A6	7004 A4	7030 B1	9085 B1
2009 A5	2025 A1	2032 A1	2040 A5	2047 A5	2061 B5	2077 A4	2808 C7	3007 A6	3016 C6	3025 B1	3034 B1	3048 A5	3057 A1	3068 A4	3101 B6	6001 A5	6008 C5	6015 A4	6030 C1	6081 A4	7007 C5	7031 C1	9806 B7	
2015 A5	2026 A6	2033 A1	2041 A1	2048 A5	2062 C5	2290 B3	3001 A4	3008 A6	3019 C4	3027 A6	3035 C6	3042 C1	3049 C1	3059 C1	3069 A3	3292 B3	6002 C4	6009 A4	6017 A5	6051 A4	6082 A6	7008 C4	9002 B1	9810 B7	
2016 A5	2027 A6	2034 A5	2042 A1	2050 A5	2063 A5	2291 A2	3002 A5	3009 A6	3020 C4	3028 C4	3036 C1	3043 A5	3051 C1	3061 A5	3070 A4	3802 B7	6003 C6	6010 A5	6020 A4	6054 C1	6154 A6	7009 A4	9008 A6	9820 B1	
2018 A5	2028 C2	2035 A5	2043 A1	2051 A1	2064 A5	2293 A1	3003 A5	3010 A4	3021 A4	3029 C6	3037 A1	3044 C1	3052 A1	3064 A5	3071 A4	3803 B6	6004 A5	6011 A5	6022 A5	6077 A5	6155 B6	7010 B1	9009 A6		

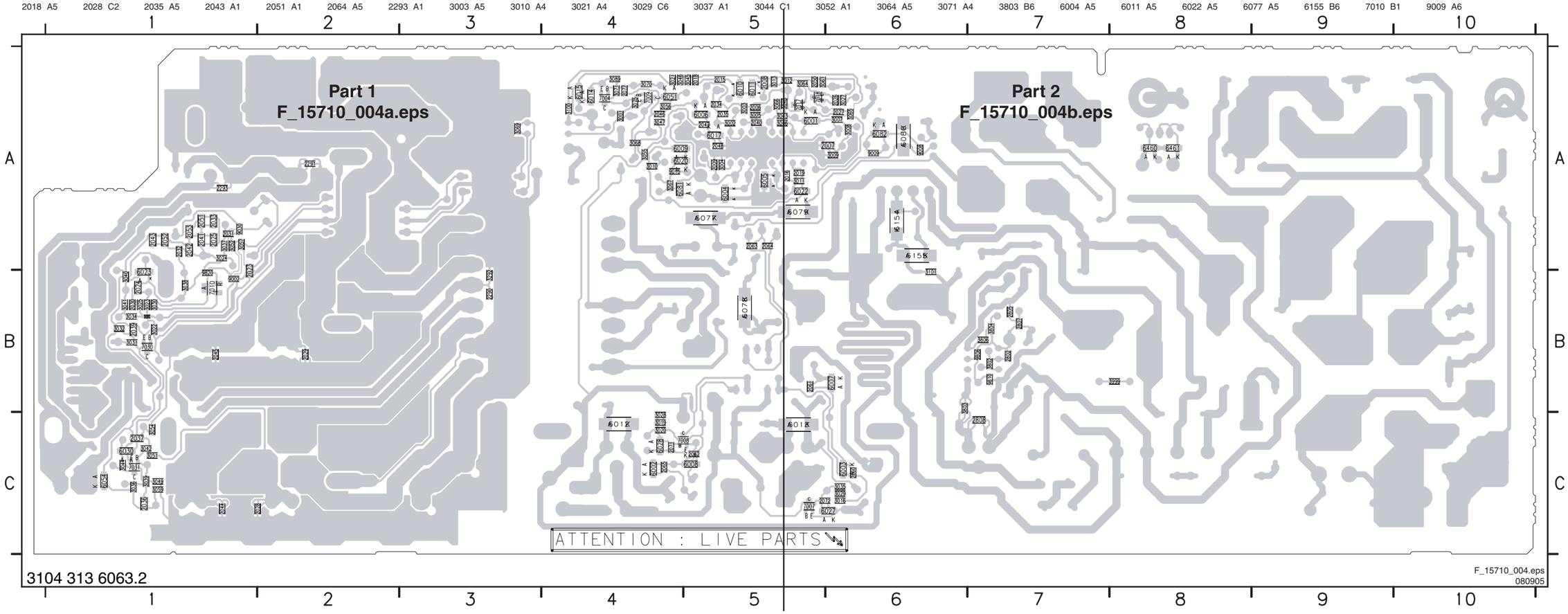

Layout LCD Supply (32") (Part 1 Bottom Side)

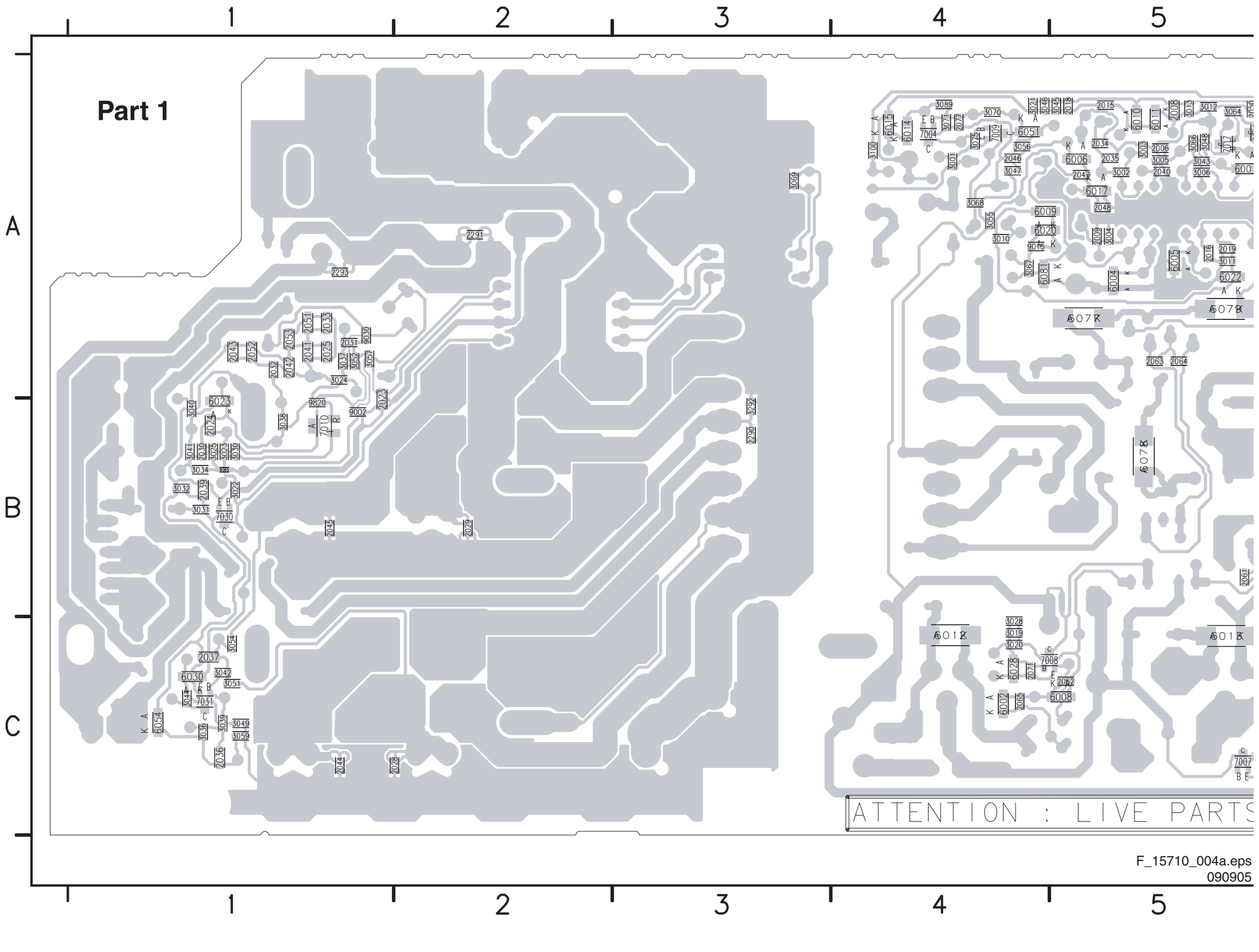

F_15710_004a.eps
090905

Layout LCD Supply (32") (Part 2 Bottom Side)

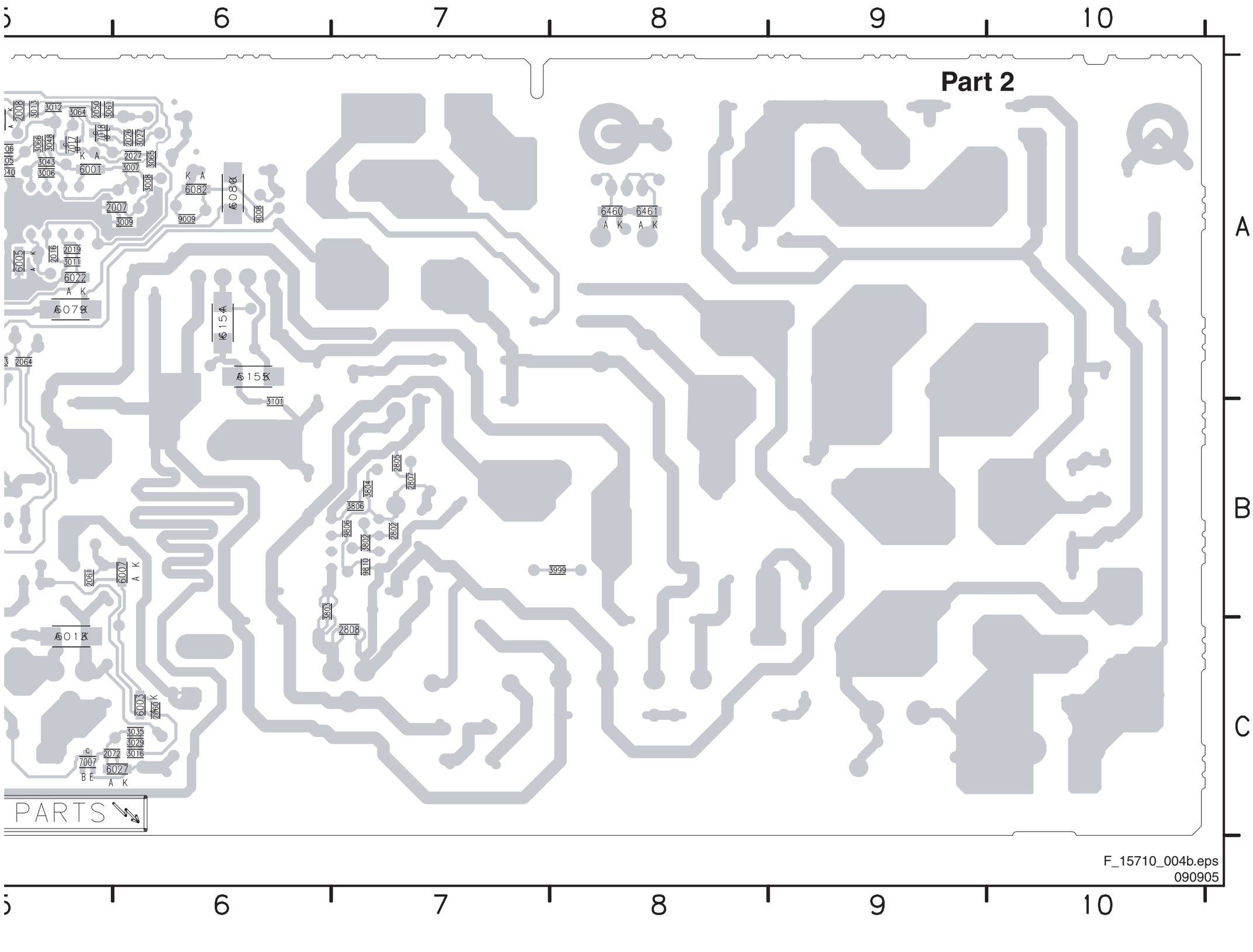

LCD Supply (37”): Mains Filter + Standby

1002 D1 1003 C4 1004 G9 1005 B4 1300 E4 1301 E4
1302 B4 1303 C4 1305 G9 1306 G2 1307 E2 1308 C1
1311 E6 1312 E7 1314 C2 1315 F3 1350 D9 2300 C3
2301 C4 2302 D5 2303 E8 2304 D11 2305 F11 2307 E4
2309 F13 2310 D11 2311 C11 2313 F11 2314 F13 2315 C12
2316 D12 2317 C12 2318 E5 2319 B10 2320 D12 2321 C13
2323 C3 2324 C4 2325 D6 2327 B10 2328 E1 2329 E2
2330 F10 2331 F10 2333 C2 2334 C2 2335 D6 2336 E1
3300 C3 3301 C2 3302 D2 3303 E2 3304 B5 3305 C4
3306 B14 3307 F10 3308 C14 3309 E10 3310 B13 3311 F11
3312 E12 3313 F10 3314 F13 3316 D6 3317 D6 3318 C10
3319 D6 3320 D7 3321 F10 3322 E12 3323 E12 3324 E12
5303 D6 5304 F13 5305 C4 5306 C5 5307 D3 5308 D12
6304 B10 6305 B11 6306 D8 6307 C11 6308 E10 6309 E10
6314 C14 6315 A12 6316 B13 6317 C13 6354 C14 6355 E9
6360 E9 6361 E9 7305 E11 7306 E13 7307 B14 9301 D14
9302 C12 9303 D5 9304 F10 9308 D12 9309 C5 9310 E11
9311 C14 9312 F13 9315 E3 9316 G3 F410 C1 F411 C2
F412 C2 F413 C2 F414 C2 F415 D2 F416 D2 F417 D2
F418 D2 F419 D2 F420 D8 F421 E8 F422 F9 F423 F9
F424 F2 F524 C14 I297 D5 I299 E5 I300 C3 I301 E4
I307 E4 I310 C3 I311 C5 I312 C5 I413 C10 I415 D8
I416 D4 I419 D2 I424 E9 I444 C8 I445 F10 I810 C11
I811 C11 I812 C11 I813 C11 I814 E10 I815 F10 I816 F10
I817 D11 I820 F10 I821 B4 I822 E12 I823 E12 I824 E12
I827 D7 I828 B13 I829 A13 I830 B10 I831 C13 I832 C13
I833 B14 I834 C14 I835 E11 I836 E11 I837 E11 I838 F11
I839 E11 I840 F11 I841 F11 I842 F10 I860 F10 I861 D12
I862 E2 I863 E2

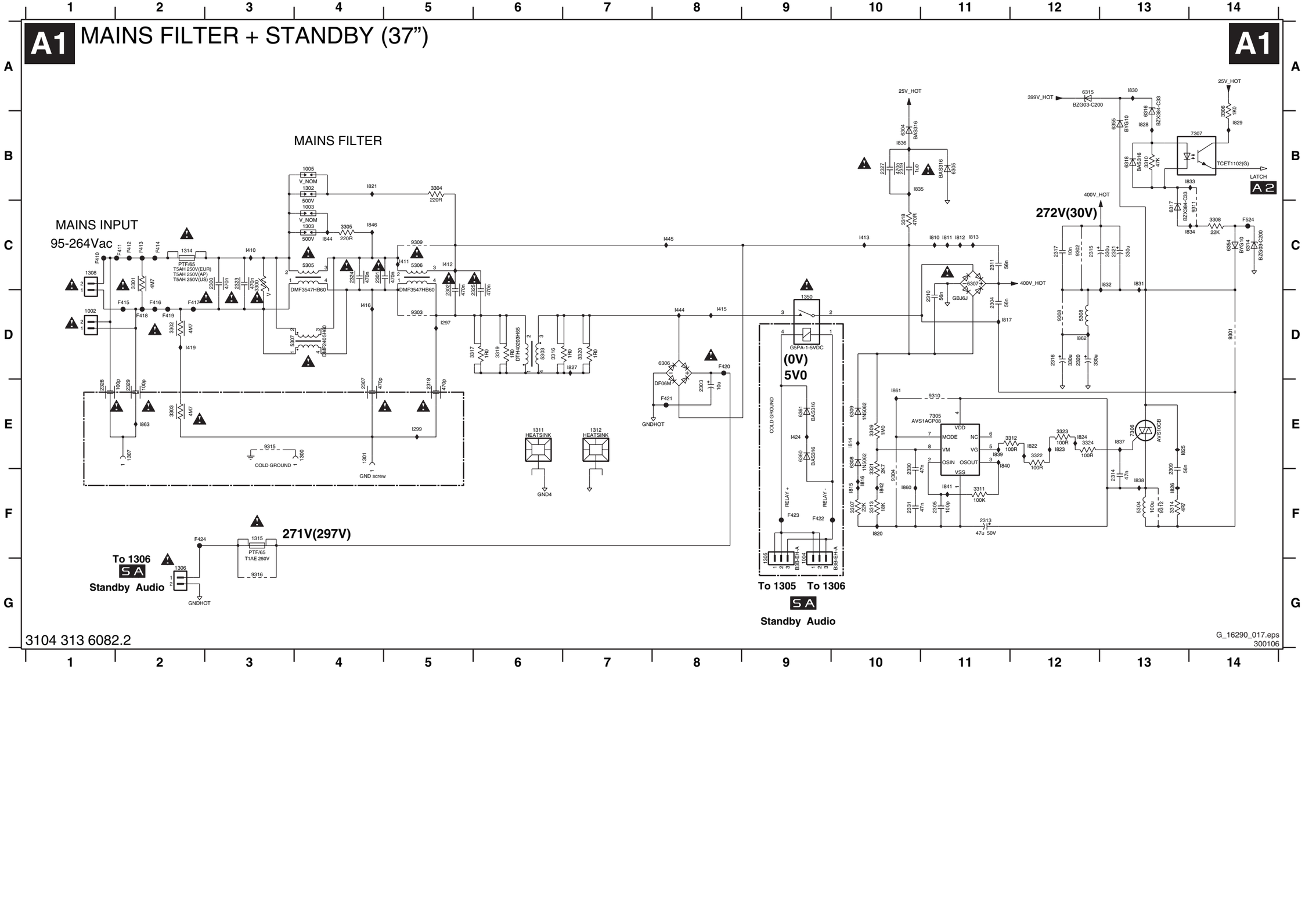

LCD Supply (37”): Supply

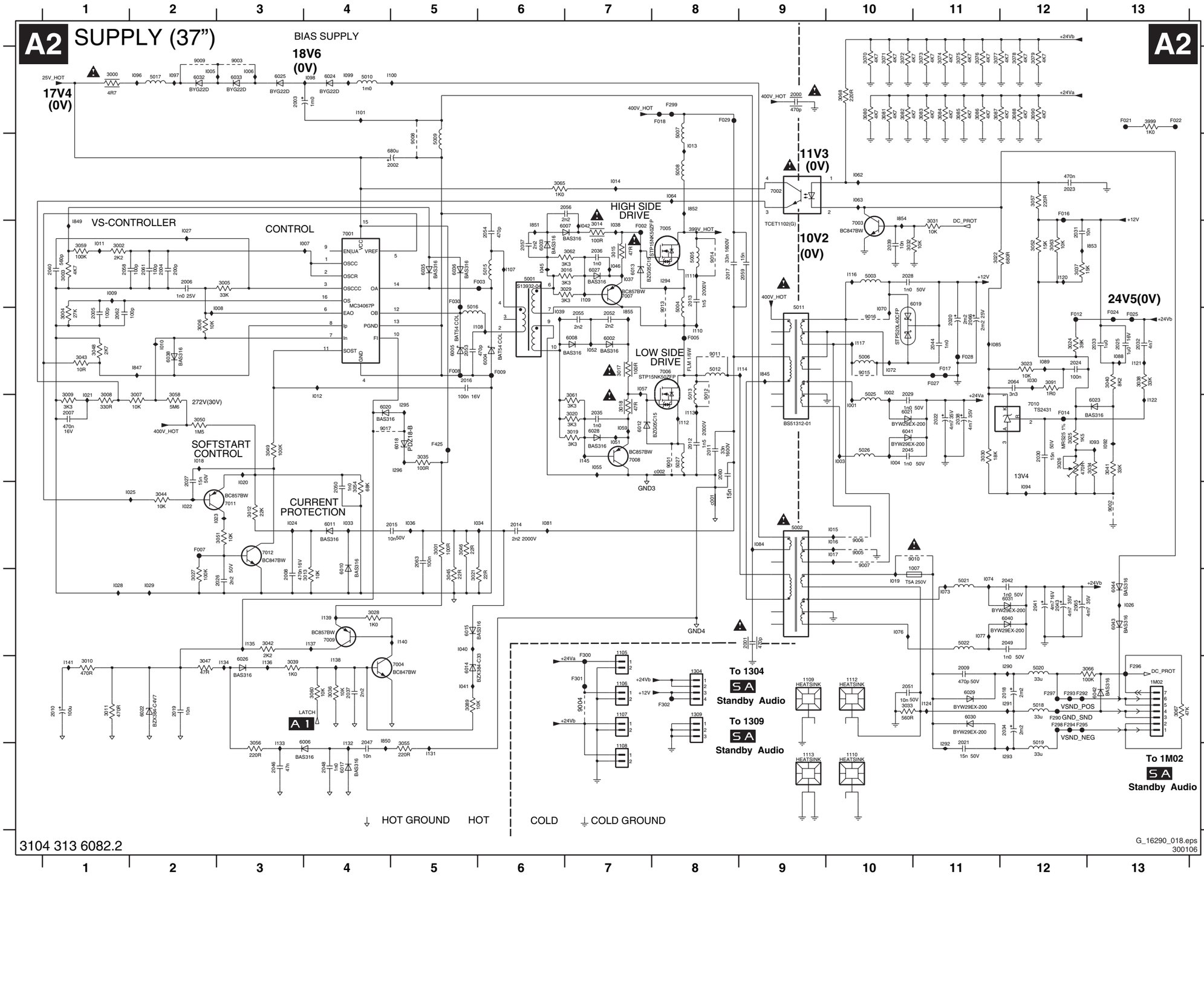

1007 G11	3035 E5	6042 H13	I072 D10	
1105 G7	3036 H4	6043 G13	I073 G11	
1106 H7	3037 C12	6044 G13	I074 G11	
1107 H7	3038 D13	7001 C4	I076 G10	
1108 I7	3039 H3	7002 B9	I077 G11	
1109 H9	3040 D13	7003 C10	I081 F6	
1110 I10	3041 E13	7004 H5	I084 F9	
1112 H10	3042 G3	7005 C8	I085 D11	
1113 I9	3043 D1	7006 D8	I088 D13	
1304 H8	3044 F2	7007 C7	I089 D12	
1309 H8	3045 G5	7008 E7	I092 E13	
1M02 H13	3046 F5	7009 G4	I093 E13	
2000 A9	3047 H2	7010 E12	I094 F12	
2001 G9	3048 D1	7011 F3	I096 A2	
2002 B5	3049 E3	7012 F3	I097 A2	
2003 A3	3050 E2	9001 E8	I098 A4	
2004 C2	3051 F3	9002 F13	I099 A4	
2005 D1	3052 C12	9003 A3	I100 A5	
2006 C2	3054 F4	9004 H7	I101 A4	
2007 E1	3055 I5	9005 F10	I107 C6	
2008 G3	3056 I3	9006 F10	I108 D6	
2009 H11	3057 B12	9007 F10	I109 C7	
2010 H1	3058 E2	9008 B5	I110 D8	
2011 E8	3059 C1	9009 A2	I111 C8	
2012 E8	3060 H4	9010 F11	I112 E8	
2013 C8	3061 E7	9011 D8	I113 E8	
2014 F6	3062 C7	9012 D8	I114 D9	
2015 F5	3063 C12	9013 C8	I116 C10	
2016 D5	3065 B6	9014 C8	I117 D10	
2017 C8	3066 H13	9015 D10	I120 C12	
2018 H12	3067 H13	9016 D10	I121 D13	
2019 H2	3068 A10	9017 E4	I122 E13	
2020 D11	3070 A10	F002 C7	I124 H11	
2021 I11	3071 A10	F003 C6	I131 I5	
2022 E11	3072 A10	F005 D8	I132 I4	
2023 B12	3073 A11	F007 F2	I133 I3	
2024 D12	3074 A11	F008 D5	I134 H3	
2025 D13	3075 A11	F009 D6	I135 G3	
2026 G3	3076 A11	F012 D12	I136 H3	
2027 E2	3077 A11	F014 E12	I137 G4	
2028 C10	3078 A12	F016 B12	I138 H4	
2029 E10	3079 A12	F017 D11	I139 G4	
2030 E12	3080 A10	F018 A8	I140 G5	
2031 C12	3081 A10	F021 A13	I141 H1	
2032 D13	3082 A10	F022 A13	I145 E7	
2033 D13	3083 A11	F024 D13	I290 H12	
2034 H12	3084 A11	F025 D13	I291 H12	
2035 E7	3085 A11	F027 D11	I292 I11	
2036 C7	3086 A11	F028 D11	I293 I12	
2037 H4	3087 A11	F029 A8	I294 C8	
2038 E11	3088 A12	F030 C5	I295 E5	
2039 C10	3089 H5	F290 H12	I296 E5	
2040 C1	3090 A12	F292 H12	I845 D9	
2041 G12	3091 D12	F293 H12	I847 D2	
2042 G12	3999 A13	F294 H12	I849 C1	
2043 G12	5001 C6	F295 H12	I850 H4	
2044 D11	5002 F9	F296 H13	I851 C6	
2045 E10	5003 C10	F297 H12	I852 B8	
2046 I3	5004 C8	F298 H12	I853 C13	
2047 I4	5005 C8	F299 A8	I854 B10	
2048 I4	5006 D10	F300 H7	I855 D7	
2049 G12	5007 A8	F301 H7	c001 F8	
2050 F4	5008 B8	F302 H8	c002 E8	
2051 H10	5009 B5	F425 E5		
2052 D7	5010 A4	I001 E10		
2053 D5	5011 D9	I002 D10		
2054 C6	5012 D8	I003 E10		
2055 D7	5013 D8	I004 E10		
2056 B7	5015 C6	I005 A2		
2057 C6	5016 D5	I006 A3		
2058 C1	5017 A2	I007 C4		
2059 C9	5018 H12	I008 D3		
2060 E8	5019 I12	I009 C1		
2061 C2	5020 H12	I010 D2		
2062 D1	5021 G11	I011 C1		
2063 F5	5022 G11	I012 E4		
2064 D12	5025 E10	I013 B8		
2065 G12	5026 E10	I014 B7		
2066 D11	5027 E8	I015 F10		
3000 A1	6002 D7	I016 F10		
3001 F5	6003 C6	I017 F10		
3002 C1	6004 D6	I018 E2		
3003 C1	6005 D5	I019 G10		
3004 D1	6006 I4	I020 F3		
3005 C3	6007 C7	I021 E1		
3006 D2	6008 D7	I022 F2		
3007 E2	6010 G4	I023 F2		
3008 E1	6011 F4	I024 F3		
3009 E1	6012 E7	I025 F2		
3010 H1	6013 C7	I026 G13		
3011 H1	6014 H5	I027 C2		
3012 F3	6015 G5	I028 G1		
3013 G4	6017 I4	I029 G2		
3014 C7	6018 E5	I030 D12		
3015 C7	6019 C10	I033 F4		
3016 C7	6020 E4	I034 F6		
3017 D7	6021 E10	I036 F5		
3018 E7	6022 H2	I037 C7		
3019 E7	6023 E13	I038 C7		
3020 E7	6024 A4	I039 D6		
3021 G5	6025 A3	I040 G5		
3022 C11	6026 H3	I041 H5		
3023 D12	6027 C7	I042 C7		
3024 D12	6028 E7	I045 C6		
3025 E12	6029 H11	I046 C7		
3026 E12	6030 H11	I051 E7		
3027 G2	6031 G12	I052 D7		
3028 G4	6032 A2	I055 E7		
3029 C7	6033 A3	I057 D7		
3030 E11	6035 C5	I059 E7		
3031 C11	6036 C5	I062 B10		
3032 C10	6038 D2	I063 B10		
3033 H10	6040 G12	I064 B8		
3034 E13	6041 E10	I070 D10		

Layout LCD Supply (37”) (Top Side)

1002	E1	1108	E10	1303	E3	1312	D3	2003	F7	2017	A5	2059	A5	2304	C3	2316	A3	2325	C2	3018	F5	3074	E9	3082	B10	3300	E2	3309	B5
1003	E3	1109	B8	1304	D10	1314	F2	2004	E5	2018	E10	2060	A5	2307	C1	2317	B3	2327	E4	3026	D9	3075	E9	3083	B10	3301	E2	3314	C5
1004	A5	1110	C8	1305	A5	1315	A6	2005	D4	2020	D10	2065	E10	2309	C4	2318	C1	2328	F1	3050	D6	3076	E9	3084	B10	3302	E1	3316	A1
1005	D2	1112	F8	1306	A5	1350	A5	2010	D6	2022	B9	2066	C10	2310	C4	2319	D4	2329	F1	3058	E6	3077	E9	3085	C9	3303	D1	3317	B1
1007	F8	1113	E8	1307	F1	1M02	F10	2011	A5	2034	F10	2300	E3	2311	D2	2320	B5	3000	E7	3070	D8	3078	D8	3086	C9	3304	D2	3318	D4
1105	B10	1300	C7	1308	E1	2000	B7	2012	F6	2038	B10	2301	E2	2313	C6	2321	B3	3001	E7	3071	E10	3079	E10	3087	C9	3305	E3	3319	B2
1106	B10	1301	C1	1309	C10	2001	E7	2013	F5	2041	E10	2302	C2	2314	C5	2323	E3	3003	F4	3072	D8	3080	B9	3088	C9	3307	C5	3320	A1
1107	D10	1302	D2	1311	E4	2002	D5	2014	C6	2043	E8	2303	A5	2315	A2	2324	E2	3017	F5	3073	E8	3081	B9	3090	C9	3308	F3	5001	E4

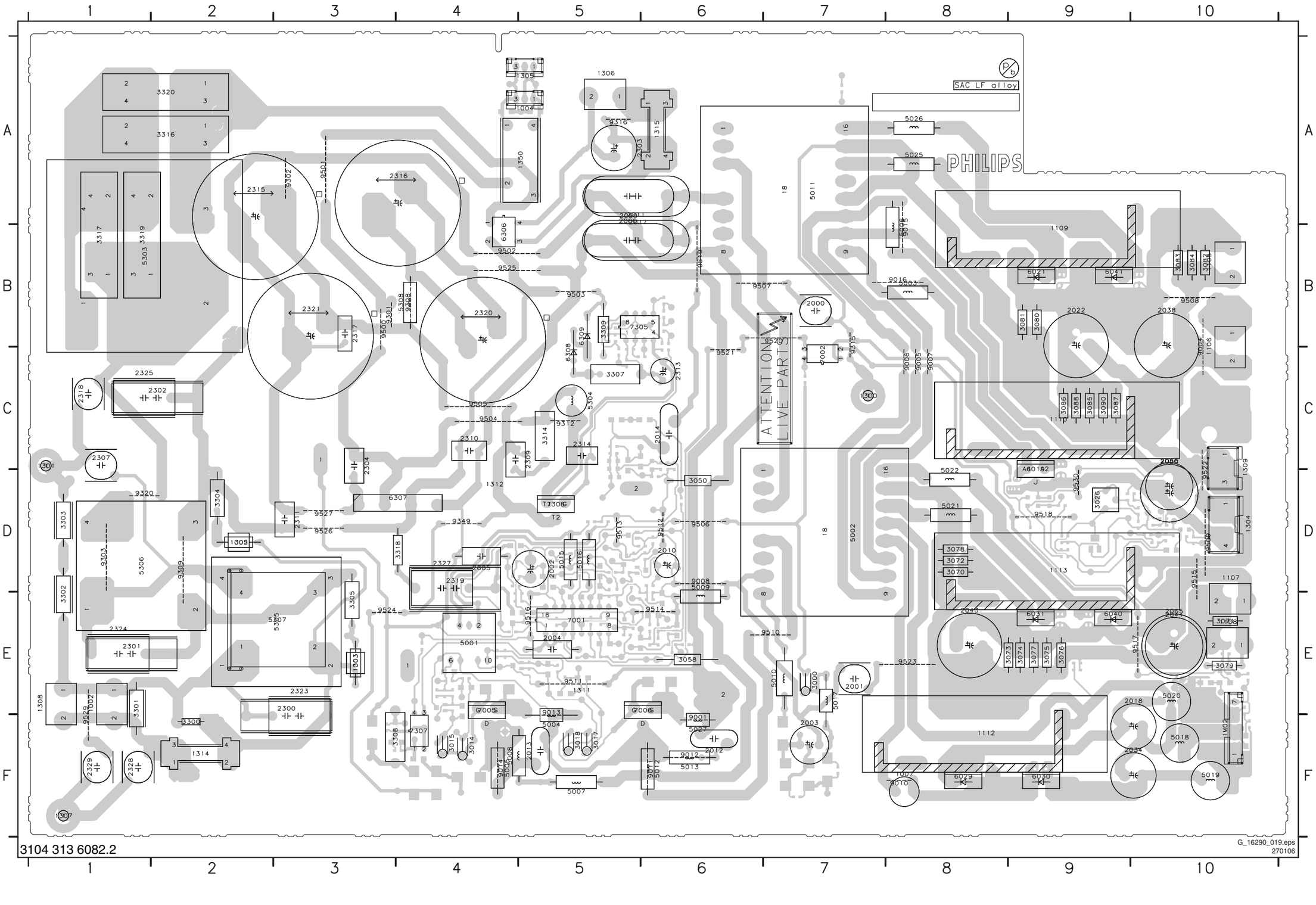

Layout LCD Supply (37”) (Overview Bottom Side)

2006 E6 2007 E6 2008 C5 2009 F3 2015 C6 2016 D6 2019 E5 2021 F2 2023 D2 2024 D1 2025 D2 2026 D5 2027 D6 2028 D2 2029 B2 2030 D1 2031 D1 2032 D1 2033 D2 2035 E6 2036 E7 2037 D5 2039 E1 2040 E6 2042 E2 2044 D2 2045 B1 2046 E5 2047 E5 2048 E5 2049 E2 2050 C5 2051 E2 2052 E6 2053 D6 2054 D6 2055 E6 2056 E7 2057 E7 2058 E6 2061 E6 2062 E6 2063 C6 2064 D1 2305 C6 2330 B6 2331 B6 3001 D6 3002 E7 3003 D7 3004 E6 3005 E6 3006 E6 3007 E6 3008 E6 3009 E6 3010 D5 3011 E5 3012 D5 3013 C5 3016 E7 3019 E7 3020 E7 3021 C6 3022 D2 3023 D1 3024 D1 3025 D1 3027 D6 3028 D6 3029 E7 3030 D2 3031 E1 3032 E1 3033 E2 3034 D1 3035 D6 3036 E5 3037 D1 3038 D1 3039 E5 3040 D2 3041 D2 3042 E6 3043 E6 3044 D6 3045 D6 3046 C6 3047 E6 3048 E6 3049 D6 3051 D5 3052 D1 3054 C5 3055 E5 3056 E5 3057 D2 3059 D7 3060 E5 3061 E6 3062 E7 3063 D1 3065 C4 3066 E1 3067 F1 3068 D2 3089 D5 3091 D1 3306 E7 3310 F7 3311 C5 3312 B5 3313 C6 3321 C6 3322 B5 3323 B5 3324 B5 3999 A4 6002 E6 6003 E7 6004 E6 6005 E6 6006 E5 6007 E7 6008 E6 6010 C6 6011 C6 6012 E5 6013 E7 6014 C5 6015 C6 6017 E5 6018 D6 6020 D6 6022 E5 6023 D1 6024 F4 6025 F4 6026 E5 6027 E7 6028 E6 6032 F4 6033 F4 6035 E6 6036 D6 6038 E6 6042 F1 6043 E1 6044 E1 6304 D7 6305 E7 6314 F8 6315 F7 6316 F7 6317 F8 6318 F7 6354 F7 6355 F7 6360 A7 6361 A6 7003 E1 7004 D6 7007 E7 7008 E7 7009 D6 7010 D2 7011 D5 7012 D6 9002 D2 9003 F4 9009 F4 9017 E6 9304 B6 9310 B5 9311 F8 9528 D7

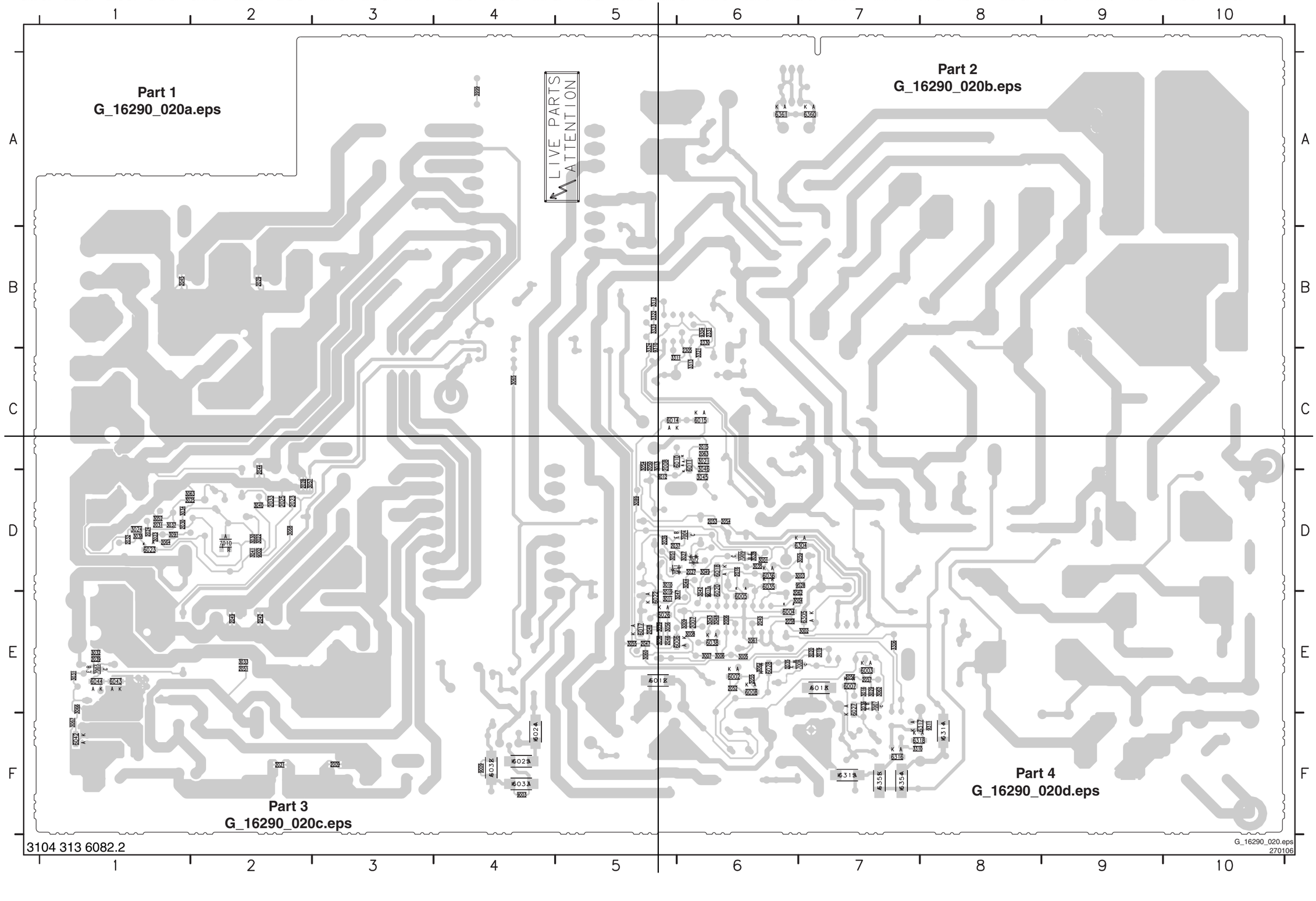

3104 313 6082.2

G_16290_020.eps
270106

Layout LCD Supply (37”) (Part 1 Bottom Side)

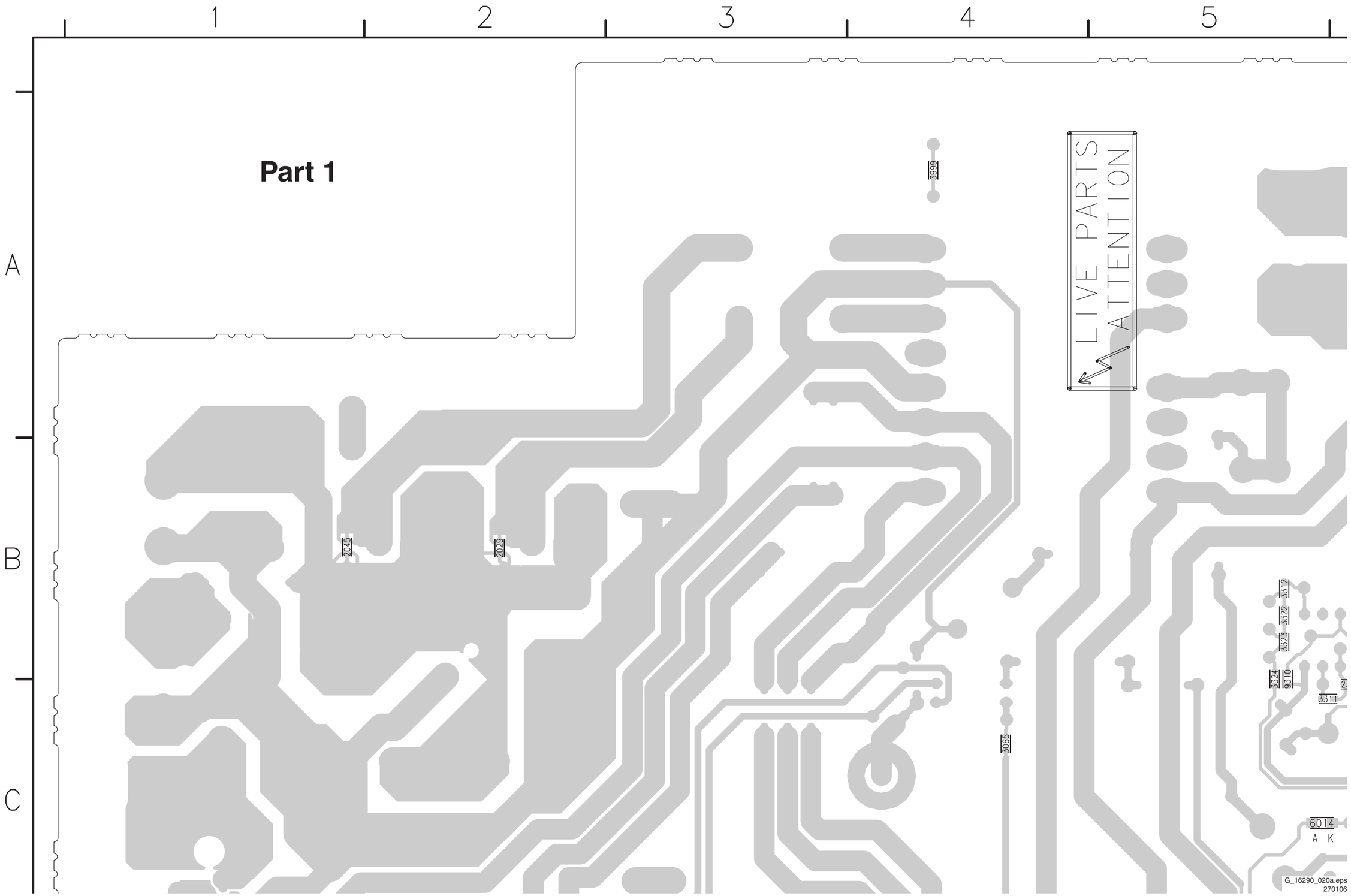

Layout LCD Supply (37”) (Part 2 Bottom Side)

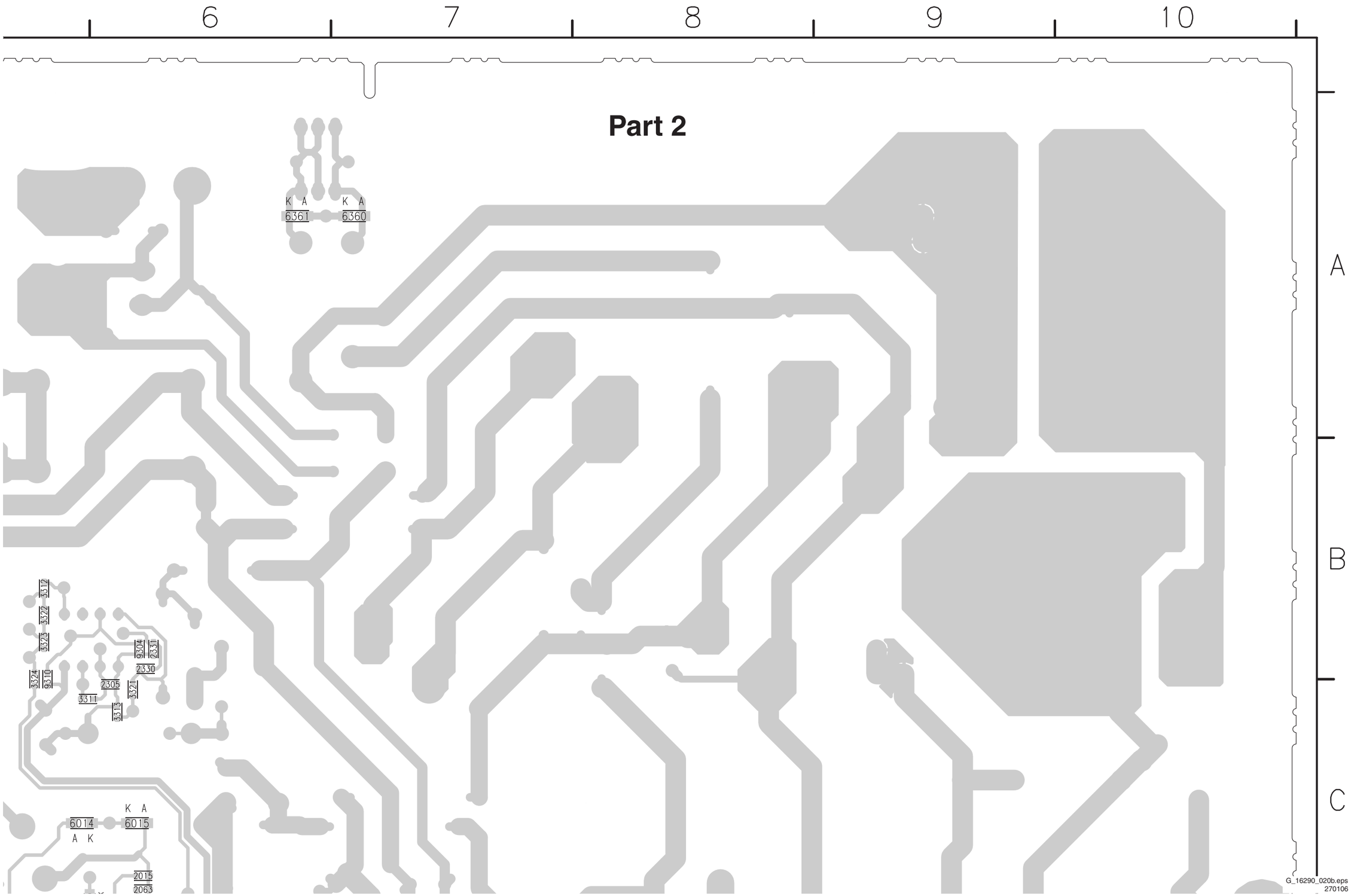

Layout LCD Supply (37”) (Part 3 Bottom Side)

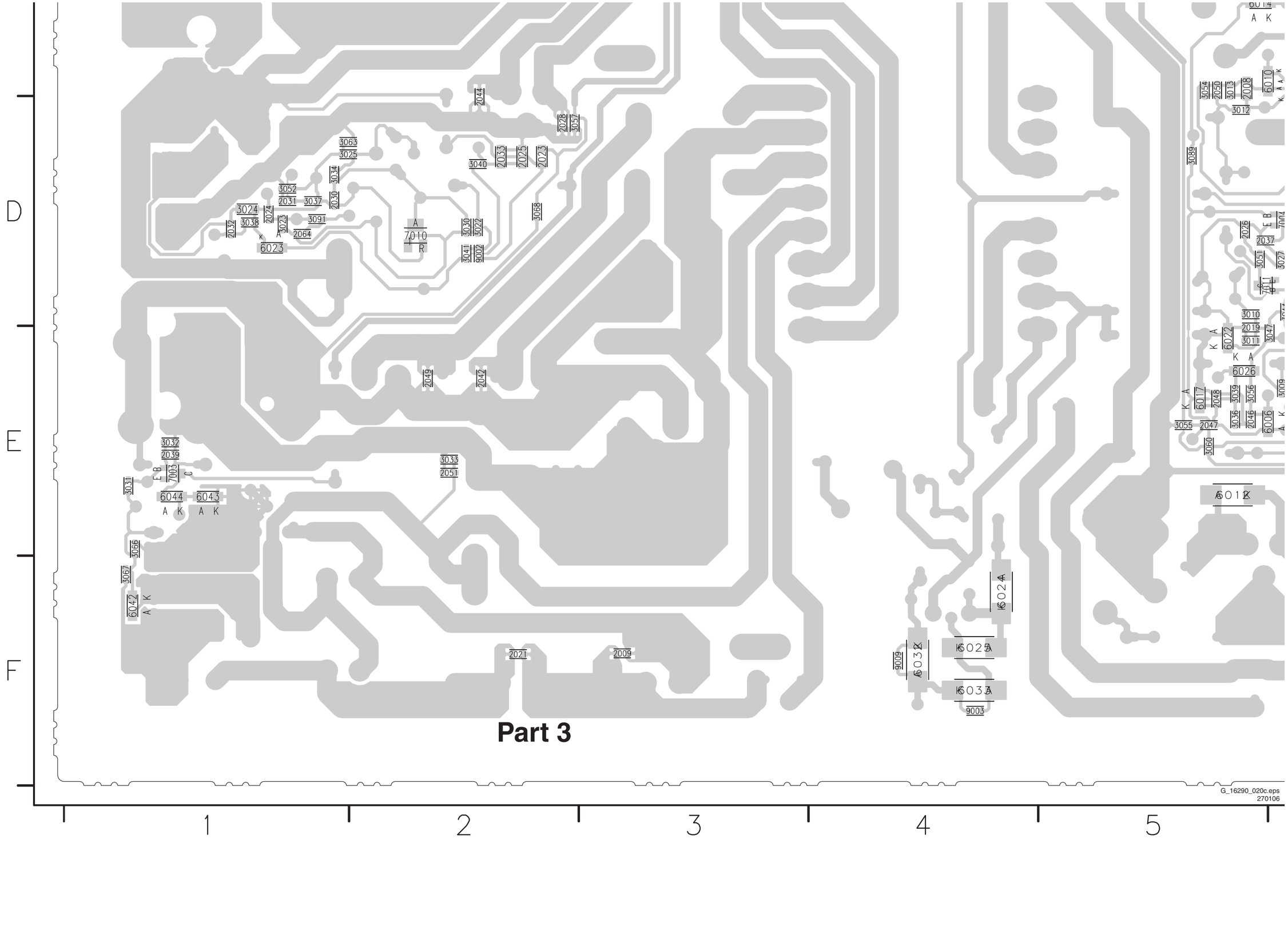

Part 3

Layout LCD Supply (37”) (Part 4 Bottom Side)

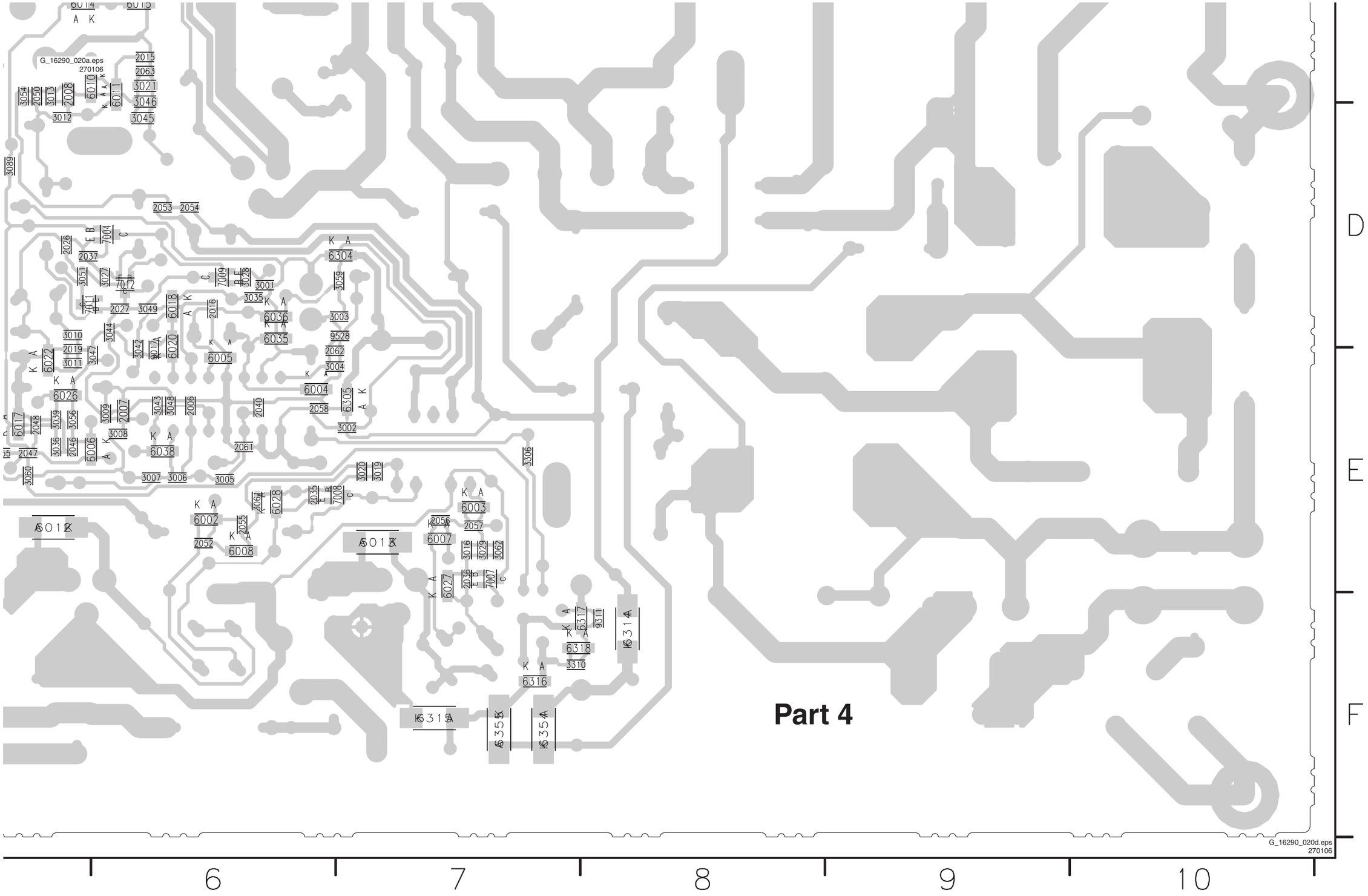

LCD Supply (42”): MF + Standby Part A

A1 MAINS FILTER + STANDBY PART A

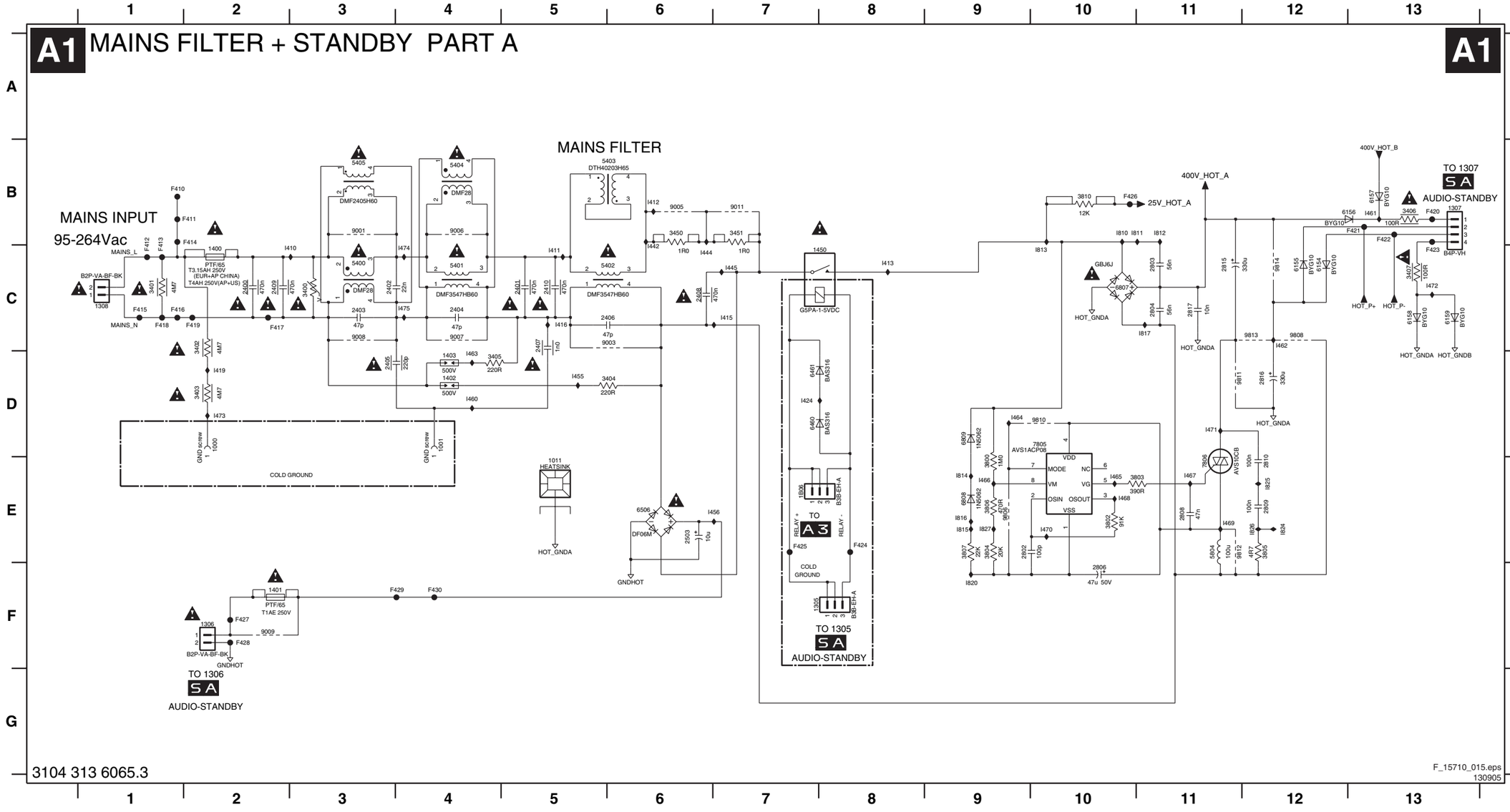

3104 313 6065.3

F_15710_015.eps
130905

1000 D2
1001 D4
1011 E5
1305 F7
1306 F2
1307 B13
1308 C1
1400 C2
1401 F2
1402 D4
1403 D4
1450 C8
1B06 E7
2400 C2
2401 C5
2402 C3
2403 C3
2404 C4
2405 D3
2406 C6
2407 C5
2408 C6
2409 C2
2410 C5
2503 E6
2802 E9
2803 C11
2804 C11
2806 F10
2808 E11
2809 E12
2810 E12
2815 C11
2816 D12
2817 C11
3400 C3
3401 C1
3402 C2
3403 D2
3404 D6
3405 D4
3406 B13
3407 C13
3450 B6
3451 B7
3800 E9
3802 E10
3803 E11
3804 E9
3805 E12
3806 E9
3807 E9
3810 B10
5400 C3
5401 C4
5402 C6
5403 B6
5404 B4
5405 B3
5804 E11
6154 C12
6155 C12
6156 B13
6157 B13
6158 C13
6159 C13
6460 D7
6461 D7
6506 E6
6807 C10
6808 E9
6809 D9
7805 D10
7806 E11
9001 B3
9003 C6
9005 B6
9006 B4
9007 C4
9008 C3
9009 F2
9011 B7
9806 E9
9808 C12
9810 D10
9811 D11
9812 E11
9813 C12
9814 C12
I410 F10
I411 C5
I412 B6
I413 C8
I415 C7
I416 C5
I419 D2
I424 D7
I442 C6
I444 C6
I445 C7
I455 D5
I456 E7
I460 D4
I462 B13
I463 C12
I464 D4
I465 E10
I466 E9
I467 E11
I468 E10
I469 E11
I470 E10
I471 D11
I472 C13
I473 D2
I474 C4
I475 C4
I810 B10
I811 B11
I812 B11
I813 C10
I814 E9
I815 E9
I816 E9
I820 F9
I824 E12
I825 E12
I826 E12
I827 E9

LCD Supply (42”): Supply Part A

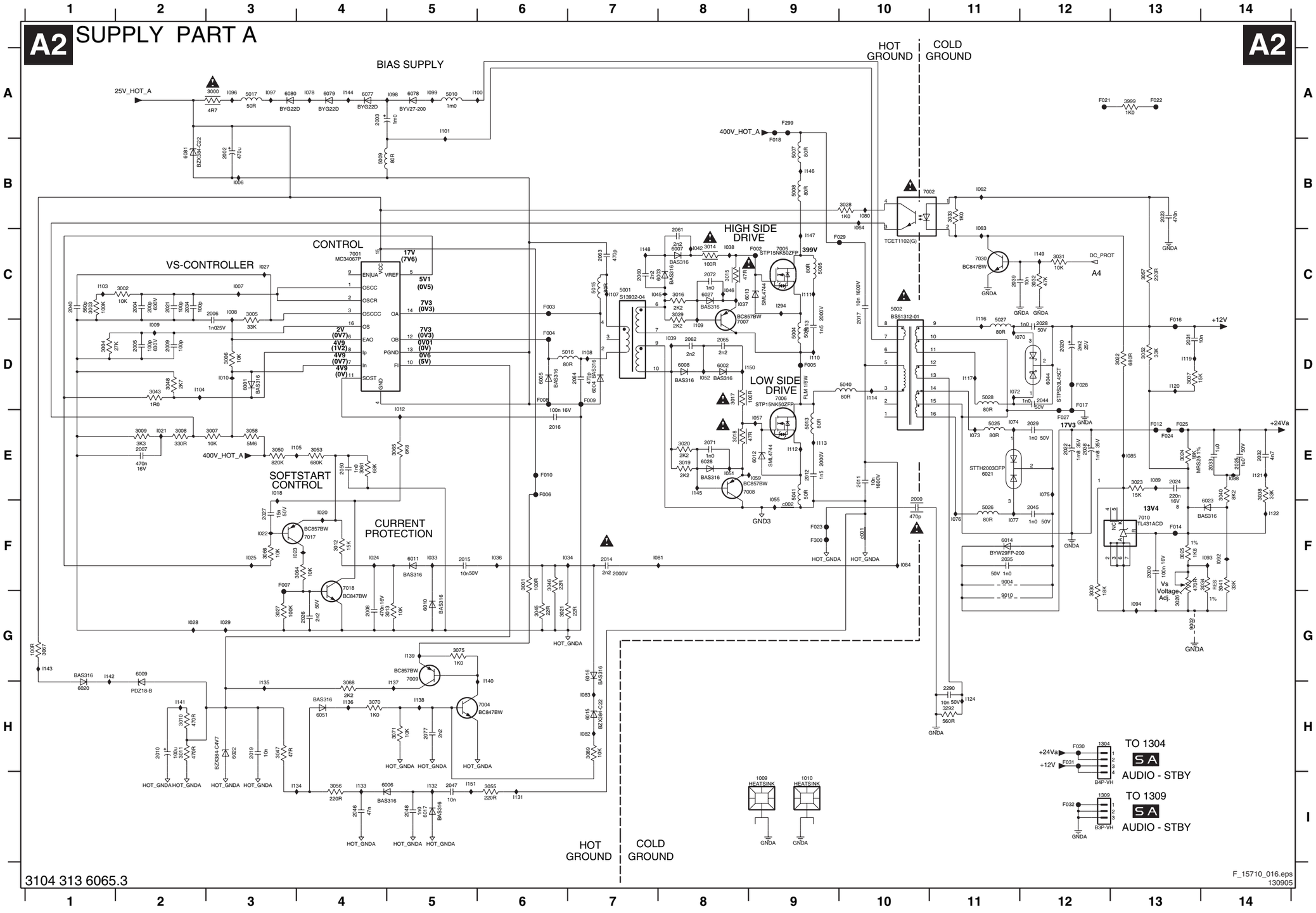

1009 I9	3070 H4	I036 F6
1010 I9	3071 H5	I037 C8
1304 H12	3075 G5	I038 C8
1309 I12	3089 H7	I039 D8
2000 F10	3292 H11	I042 C8
2002 B3	3999 A13	I045 C7
2003 A4	5001 C7	I046 C8
2004 C2	5002 C10	I051 E8
2005 D2	5004 D9	I052 D8
2006 C3	5005 C9	I055 E9
2007 E2	5007 B9	I057 E9
2008 G4	5008 B9	I059 E9
2009 D2	5009 B4	I062 B11
2010 H2	5010 A5	I063 B11
2011 E10	5013 E9	I064 B10
2012 E9	5015 C7	I070 D12
2013 D9	5016 D7	I072 D11
2014 F7	5017 A3	I073 E11
2015 F5	5025 E11	I074 E11
2016 E6	5026 F11	I075 E12
2017 C10	5027 D11	I076 F11
2019 H3	5028 D11	I077 F11
2020 D12	5040 D10	I078 A4
2021 C2	5041 E9	I080 B10
2022 E12	6001 D3	I081 F8
2023 B13	6002 D8	I082 H7
2024 E13	6003 C8	I083 H7
2025 E14	6004 D7	I084 F10
2026 G4	6005 D6	I085 E13
2027 F3	6006 I5	I088 E14
2028 D12	6007 C8	I089 E13
2029 E12	6008 D8	I092 F14
2030 F13	6009 G2	I093 F14
2031 D13	6010 G5	I094 G13
2032 E14	6011 F5	I096 A3
2033 E14	6012 E9	I097 A3
2034 C2	6013 C9	I098 A5
2035 F11	6014 F11	I099 A5
2038 E12	6015 H7	I100 A6
2039 C11	6016 G7	I101 A5
2040 C1	6017 I5	I103 C1
2044 D12	6020 H1	I104 D2
2045 F12	6021 E11	I105 E4
2046 I4	6022 H3	I107 C7
2047 I5	6023 F14	I108 D7
2048 I5	6027 C8	I109 D8
2050 E4	6028 E8	I110 D9
2060 C7	6044 D12	I111 C9
2061 C8	6051 H4	I112 E9
2062 D8	6077 A4	I113 E9
2063 C7	6078 A5	I114 D10
2064 D7	6079 A4	I116 C11
2065 D8	6080 A3	I117 D11
2071 E8	6081 B2	I119 D13
2072 C8	7001 C4	I120 D13
2077 H5	7002 B10	I121 E14
2290 H11	7004 H6	I122 F14
3000 A3	7005 C9	I124 H11
3001 F6	7006 D9	I131 I6
3002 C2	7007 D8	I132 I5
3003 C1	7008 E8	I133 I4
3004 D1	7009 G5	I134 I4
3005 C3	7010 F13	I135 H3
3006 D3	7017 F4	I136 H4
3007 E3	7018 F4	I137 H5
3008 E2	7030 C11	I138 H5
3009 E2	9002 G13	I139 G5
3010 H2	9004 F11	I140 G6
3011 H2	9010 G11	I141 H2
3012 F4	F002 C9	I142 G1
3013 G5	F003 C6	I143 G1
3014 C8	F004 D6	I144 A4
3015 C8	F005 D9	I145 E8
3016 C8	F006 E6	I146 B9
3017 D8	F007 F3	I147 C9
3018 E8	F008 D6	I148 C7
3019 E8	F009 D7	I149 C12
3020 E8	F010 E6	I150 D9
3021 G6	F012 E13	I151 I5
3022 D13	F014 F13	I294 C9
3023 E13	F016 D13	c001 F10
3024 E13	F017 D12	c002 F9
3025 F13	F018 B9	
3026 G13	F021 A12	
3027 G3	F022 A13	
3028 B10	F023 F9	
3029 C8	F024 E13	
3030 G12	F025 E13	
3031 C12	F027 E12	
3032 C12	F028 D12	
3033 B11	F029 C10	
3034 F14	F030 H12	
3037 D13	F031 H12	
3038 E14	F032 I12	
3040 E14	F299 A9	
3041 F14	F300 F9	
3043 D2	I006 B3	
3045 G6	I007 C3	
3046 F6	I008 C3	
3047 H3	I009 D2	
3048 D2	I010 D3	
3050 E3	I012 D5	
3052 D13	I018 E3	
3053 E4	I020 F4	
3055 I6	I021 E2	
3056 I4	I022 F3	
3057 C13	I023 F3	
3058 E3	I024 F4	
3061 E4	I025 F3	
3064 F4	I027 C3	
3065 E5	I028 G2	
3066 F3	I029 G3	
3067 G1	I033 F5	
3068 H4	I034 F7	

LCD Supply (42”): MF + Standby Part B

A3 MAINS FILTER + STANDBY PART B

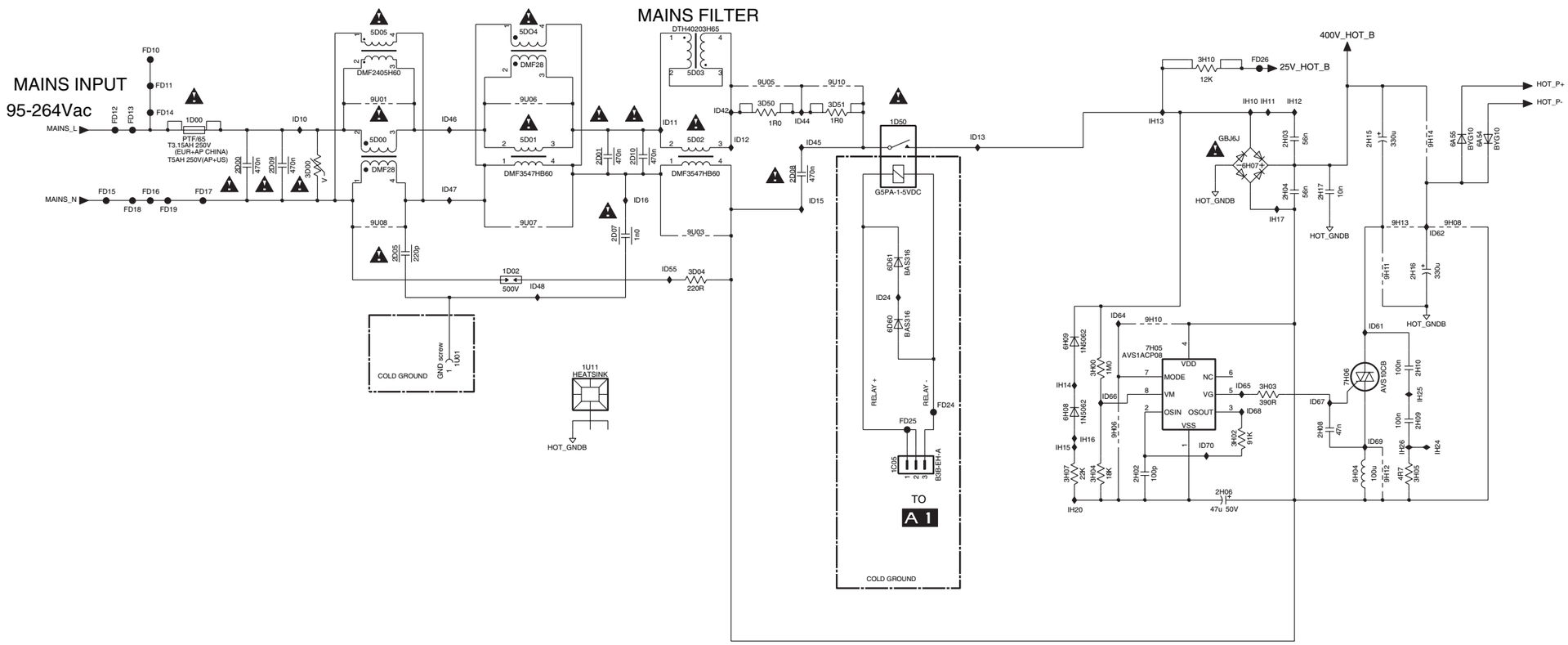

1C05 E8
1D00 C2
1D02 D5
1D03 D5
1D50 C8
1U01 E4
1U11 E5
2D00 C2
2D01 C5
2D03 C4
2D04 C5
2D05 D4
2D06 C6
2D07 D6
2D08 C7
2D09 C3
2D10 C6
2H02 F10
2H03 C11
2H04 C11
2H06 F10
2H08 E11
2H09 E12
2H10 E12
2H15 C12
2H16 D12
2H17 C11
3D00 C3
3D04 D6
3D05 D5
3D50 C7
3D51 C7
3H00 E9
3H02 E11
3H03 E11
3H04 F9
3H05 F12
3H07 F9
3H10 B10
5D00 C4
5D01 C5
5D02 C6
5D03 B6
5D05 B4
5DO4 B5
5H04 F12
6A54 C13
6A55 C12
6D60 D8
6D61 D8
6H07 C11
6H08 E9
6H09 D9
7H05 E10
7H06 E11
9H06 E10
9H08 D12
9H10 D10
9H11 D12
9H12 F12
9H13 D12
9H14 C12
9U01 C4
9U03 D6
9U05 B7
9U06 C5
9U07 D5
9U08 D4
9U10 B7
FD10 B2
FD11 B2
FD12 C1
FD13 C2
FD14 C2
FD15 C1
FD16 C2
FD17 C2
FD18 C2
FD19 C2
FD24 E8
FD25 E8
FD26 B11
ID10 C3
ID11 C6
ID12 C7
ID13 C8
ID15 C7
ID16 C6
ID24 D8
ID42 C6
ID44 C7
ID45 C7
ID46 C4
ID47 C4
ID48 D5
ID55 D6
ID61 D12
ID62 D12
ID63 D5
ID64 D10
ID65 E11
ID66 E10
ID67 E11
ID68 E11
ID69 E12
ID70 E10
IH10 C11
IH11 C11
IH12 C11
IH13 C10
IH14 E9
IH15 E9
IH16 E9
IH17 F9
IH20 F9
IH24 E12
IH25 E12
IH26 E12

F_15710_017.eps
130905

LCD Supply (42”): Supply Part B

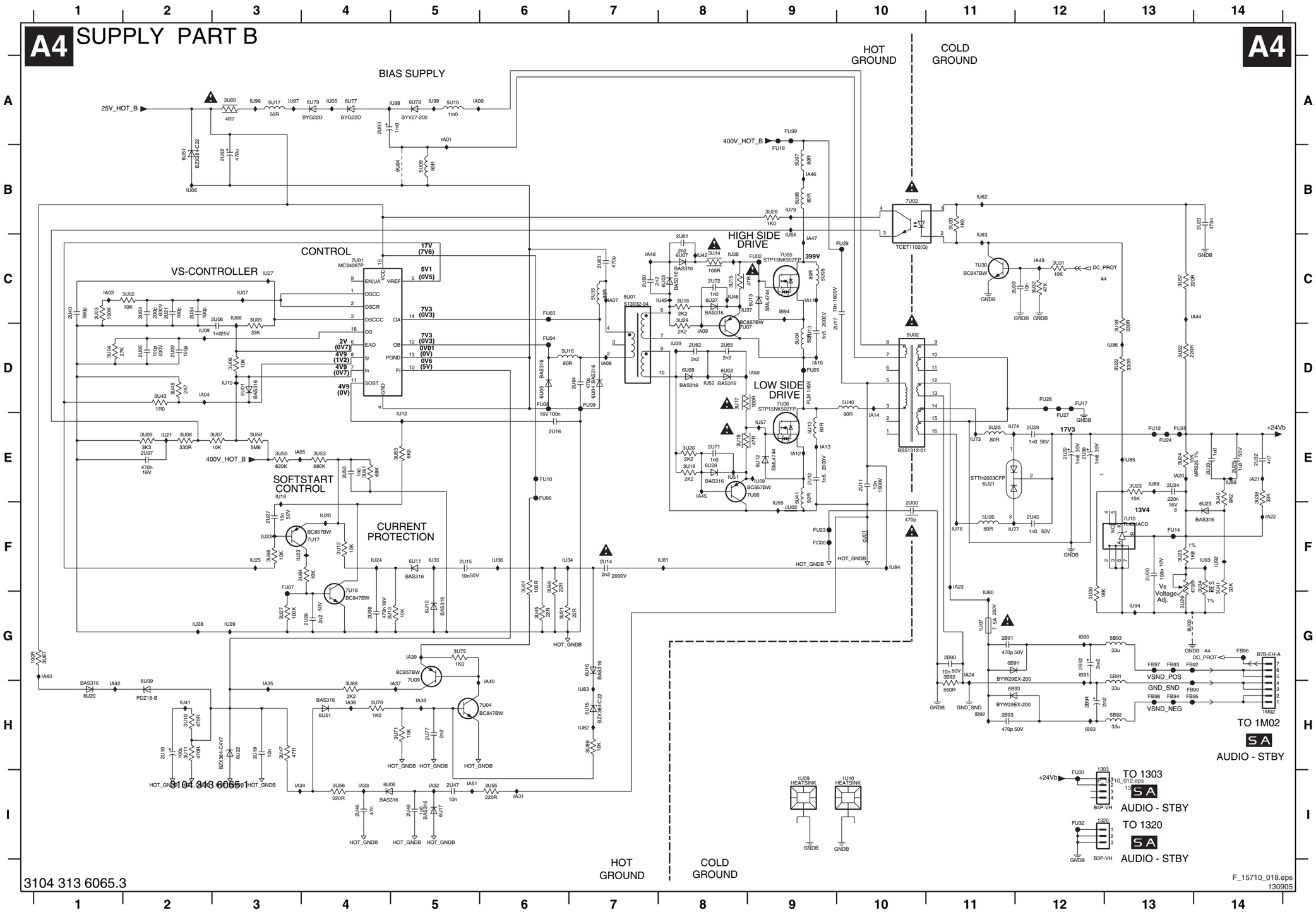

1303 I12	3U70 H4	IA32 I5
1320 I12	3U71 H5	IA33 I4
1M02 H14	3U75 G5	IA34 I3
1U07 G11	3U89 H7	IA35 H3
1U09 I9	5B91 G13	IA36 H4
1U10 I10	5B92 H13	IA37 H5
2B90 G11	5B93 G13	IA38 H5
2B91 G11	5U01 C7	IA39 G5
2B92 G12	5U02 D10	IA40 H6
2B93 H11	5U04 D9	IA42 H1
2B94 H12	5U05 C9	IA43 G1
2U00 F10	5U07 B9	IA44 C14
2U02 B3	5U08 B9	IA45 E8
2U03 A4	5U09 B5	IA46 B9
2U04 C2	5U10 A5	IA47 C9
2U05 D2	5U13 E9	IA48 C7
2U06 C3	5U15 C7	IA49 C12
2U07 E2	5U16 D6	IA50 D9
2U08 G4	5U17 A3	IA51 I5
2U09 D2	5U25 E11	IB90 G12
2U10 H2	5U26 F11	IB91 G12
2U11 E10	5U40 D10	IB92 H11
2U12 E9	5U41 E9	IB93 H12
2U13 D9	6B91 G11	IB94 C9
2U14 F7	6B93 H11	IU05 A4
2U15 F5	6U01 D3	IU06 B2
2U16 E6	6U02 D8	IU07 C3
2U17 D10	6U03 C8	IU08 C3
2U19 H3	6U04 D7	IU09 D2
2U21 C2	6U05 D6	IU10 D3
2U22 E12	6U06 I4	IU12 E5
2U23 B14	6U07 C8	IU18 E3
2U24 E13	6U08 D8	IU20 F4
2U25 E14	6U09 H2	IU21 E2
2U26 G4	6U10 G5	IU22 F3
2U27 F3	6U11 F5	IU23 F3
2U29 E12	6U12 E9	IU24 F4
2U30 F13	6U13 C9	IU25 F3
2U32 E14	6U15 H7	IU27 C3
2U33 E14	6U16 G7	IU28 G2
2U34 C2	6U17 I5	IU29 G3
2U38 E12	6U20 H1	IU33 F5
2U39 C12	6U21 E11	IU34 F6
2U40 C1	6U22 H3	IU36 F6
2U45 F12	6U23 F14	IU37 C8
2U46 I4	6U27 C8	IU38 C8
2U47 I5	6U28 E8	IU39 D8
2U48 I5	6U51 H4	IU41 H2
2U50 E4	6U77 A4	IU42 C8
2U60 C7	6U78 A5	IU45 C8
2U61 C8	6U79 A4	IU46 C8
2U62 D8	6U81 B2	IU51 E8
2U63 C7	7U01 C4	IU52 D8
2U64 D7	7U02 B10	IU55 F9
2U65 D8	7U04 H5	IU57 E9
2U71 E8	7U05 C9	IU59 E9
2U72 C8	7U06 D9	IU62 B11
2U77 H5	7U07 D8	IU63 C11
3B92 G11	7U08 E8	IU64 C9
3U00 A3	7U09 G5	IU73 E11
3U01 F6	7U10 F13	IU74 E11
3U02 C2	7U17 F4	IU76 F11
3U03 C1	7U18 G4	IU77 F11
3U04 D1	7U30 C11	IU79 B9
3U05 C3	9U02 G13	IU80 G11
3U06 D3	9U04 B5	IU81 F8
3U07 E3	FB90 H13	IU82 H7
3U08 E2	FB92 G13	IU83 H7
3U09 E2	FB93 G13	IU84 F10
3U10 H2	FB94 H13	IU85 E13
3U11 H2	FB95 H13	IU86 D13
3U12 F4	FB96 G14	IU88 E14
3U13 G5	FB97 G13	IU89 E13
3U14 C8	FB98 H13	IU92 F14
3U15 C8	FC00 F9	IU93 F14
3U16 C8	FU02 C9	IU94 G13
3U17 D8	FU03 C6	IU96 A3
3U18 E8	FU04 D6	IU97 A3
3U19 E8	FU05 D9	IU98 A5
3U20 E8	FU06 E6	IU99 A5
3U21 G6	FU07 F3	cU01 F10
3U22 D13	FU08 D6	cU02 F9
3U23 E13	FU09 D7	
3U24 E13	FU10 E6	
3U25 F13	FU12 E13	
3U26 G13	FU14 F13	
3U27 G3	FU17 D12	
3U28 B9	FU18 B9	
3U29 C8	FU23 F9	
3U30 G12	FU24 E13	
3U31 C12	FU25 E13	
3U32 C12	FU27 E12	
3U33 B11	FU28 D12	
3U34 F14	FU29 C10	
3U38 E14	FU30 I12	
3U39 D13	FU32 I12	
3U40 E14	FU99 A9	
3U41 F14	IA00 A5	
3U43 D2	IA01 A5	
3U45 G6	IA03 C1	
3U46 F6	IA04 D2	
3U47 H3	IA05 E3	
3U48 D2	IA07 C7	
3U50 E3	IA08 D7	
3U52 D13	IA09 D8	
3U53 E4	IA10 D9	
3U55 I6	IA11 C9	
3U56 I4	IA12 E9	
3U57 C13	IA13 E9	
3U58 E3	IA14 E10	
3U61 E4	IA20 E13	
3U64 F4	IA21 E14	
3U65 E5	IA22 F14	
3U66 F3	IA23 F11	
3U67 G1	IA24 G11	
3U68 H4	IA31 I6	

Layout LCD Supply (42") (Top Side)

1000 B1 1001 A2 1009 B10 1010 C10 1011 C4 1303 E11 1304 B11 1305 A4 1306 A5 1307 D5
1308 C1 1309 B11 1320 E11 1400 B1 1401 A5 1402 A3 1403 A3 1450 B4 1B06 A4 1C05 D4
1D00 D1 1D02 F2 1D50 E4 1M02 F11 1U01 D3 1U07 F10 1U09 E10 1U10 G10 1U11 G4 2000 A9
2002 B8 2003 B7 2004 A8 2005 A8 2010 A8 2011 C7 2012 D9 2013 C7 2014 A9 2017 B7
2020 C11 2022 B11 2025 A10 2033 A11 2038 B10 2400 B1 2401 B4 2402 A2 2403 A3 2404 A3
2405 A3 2406 B3 2407 B4 2408 C3 2409 B1 2410 B4 2503 A5 2803 C4 2804 C5 2806 B5
2808 C5 2809 D4 2810 D5 2815 B4 2816 B6 2817 A6 2B92 F10 2B94 F10 2D00 E2 2D01 E4
2D05 D4 2D07 E4 2D08 E4 2D09 E2 2D10 E4 2H03 F5 2H04 F5 2H06 F5 2H08 F5 2H09 G5
2H10 G6 2H15 E5 2H16 E6 2H17 E6 2U00 E9 2U02 E8 2U03 E7 2U04 D7 2U08 D7 2U10 D8
2U11 F8 2U12 G9 2U13 G8 2U17 F7 2U22 F11 2U25 D11 2U33 D11 2U38 E10 3000 A6
3014 C7 3015 C7 3017 D8 3018 D7 3026 A10 3050 A7 3053 A7 3058 A7 3400 B2 3401 C1
3402 C1 3403 C1 3404 B3 3405 B3 3406 D5 3407 D6 3450 C2 3451 C3 3800 B5 3803 C5
3805 C5 3807 B5 3810 B5 3D00 D1 3D04 F2 3D50 G2 3D51 G4 3H00 E5 3H03 F6 3H05 G4
3H07 E5 3H10 E5 3U00 D5 3U14 F7 3U15 G7 3U17 G8 3U18 G8 3U26 D10 3U50 E7 3U53 D6
3U58 E7 5001 C7 5002 B9 5004 C7 5005 D7 5007 A6 5008 A6 5009 B8 5010 B7 5013 D8
5015 B7 5016 B7 5017 A5 5025 B10 5026 B10 5027 C9 5028 C10 5040 C7 5041 D9 5400 A1
5401 A2 5402 C3 5403 D2 5404 B3 5405 A2 5804 C5 5B91 F11 5B92 F11 5B93 F11 5D00 D1
5E04 E3 5H04 F5 5U01 F7 5U02 F9 5U04 F7 5U05 G8 5U07 E6 5U08 E6 5U09 E8 5U10 E8
5U13 G9 5U15 E7 5U16 E7 5U17 D6 5U25 E10 5U26 E10 6014 A11 6021 B10 6044 D10
6506 B4 6078 B7 6807 C4 6809 B5 6B91 G10 6B92 G11 6B93 G11 6H07 G5 6H08 E5
6H09 E5 6U21 E10 6U78 E7 7001 A7 7002 A9 7005 D7 7006 C8 7805 B5 7806 D5
7H05 F6 7H06 G6 7U01 E7 7U02 D9 7U05 G7 7U06 G9 9001 A1 9003 B4 9004 B11
9005 D2 9006 B2 9007 B3 9008 A1 9009 A5 9010 B11 9011 C3 9080 A8 9082 C4
9088 A10 9089 D2 9090 A10 9091 A9 9092 B8 9093 A8 9094 B7 9095 B9 9096 C7
9097 D6 9098 C4 9099 B3 9808 C6 9811 C6 9812 C5 9813 C6 9814 B6 9H08 F6
9H11 F6 9H12 F5 9H13 E6 9H14 E6 9H15 F6 9H16 G5 9H17 C1 9U01 E1 9U03 E4
9U04 E8 9U05 G3 9U06 E3 9U07 E3 9U08 E2 9U09 G8 9U10 F4 9U50 E3 9U51 E9
9U52 E5 9U53 F5 9U54 G7 9U55 D8 9U56 F10 9U58 E7 9U59 E5 9U60 D4 9U61 D5
9U62 D5 9U63 B11 9U74 D7 9U76 E8 9U77 E9 9U78 E9 9U79 E8 9U80 E7 9U81 E7
9U82 F7 9U83 E7 9U84 G4 9U85 E6 9U86 B9 9U87 B9 9U88 F3 9U90 E2 9U91 E2

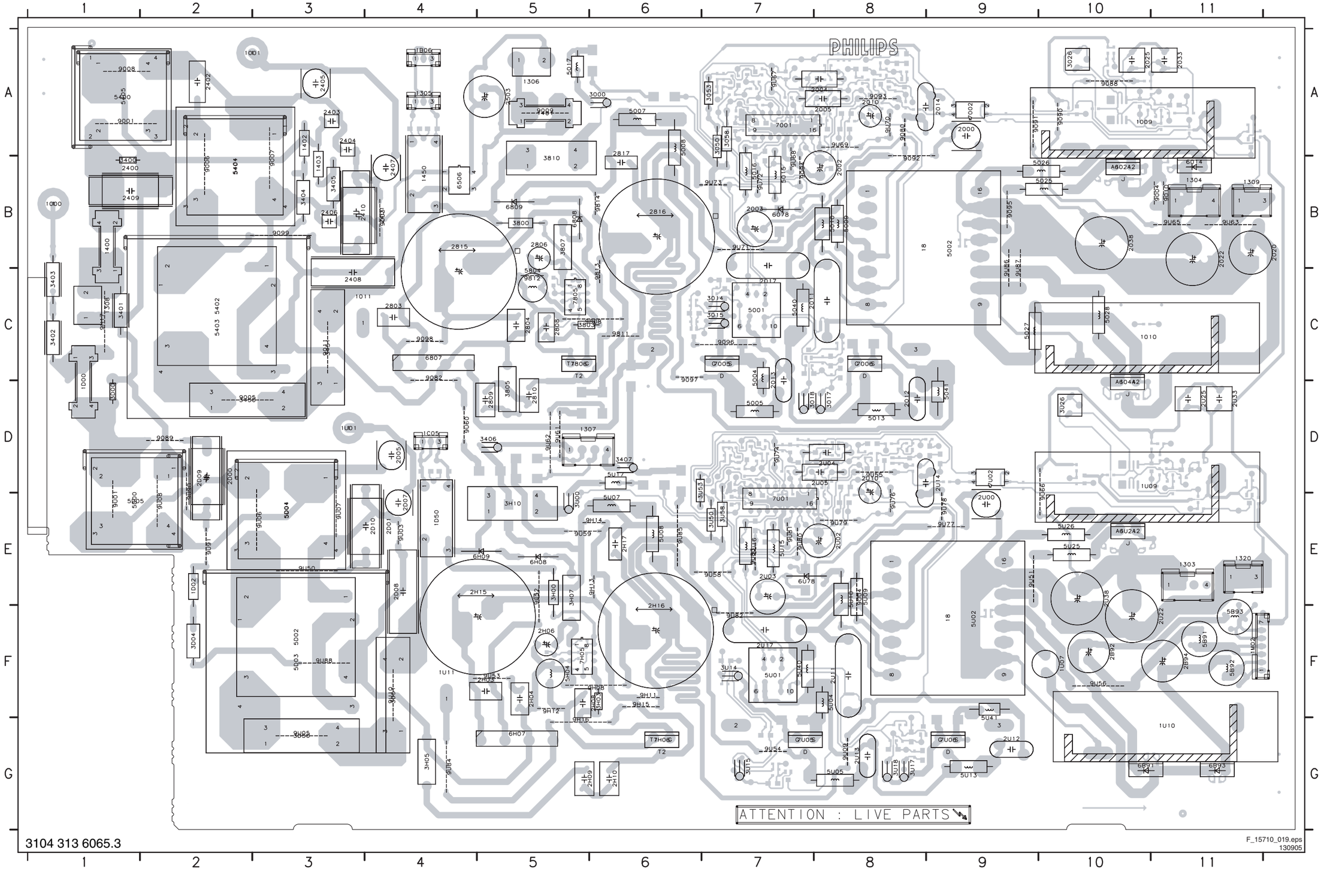

Layout LCD Supply (42”) (Overview Bottom Side)

2006	A5	2024	A2	2035	B1	2060	C5	2290	B3	2U09	D4	2U29	E2	2U48	E4	2U72	G5	3008	A5	3021	A4	3031	A1	3045	A4	3064	A5	3292	B3	3U02	D5
2007	A5	2026	A5	2039	A1	2061	C5	2802	C7	2U15	D4	2U30	D1	2U50	D5	2U77	D4	3009	A5	3022	A1	3032	A1	3046	A4	3065	A5	3802	C7	3U03	D4
2008	A5	2027	A5	2040	A5	2062	C5	2B90	F3	2U16	E5	2U32	D1	2U60	G5	3001	A4	3010	A4	3023	A2	3033	A3	3047	A4	3066	A5	3804	C7	3U04	E4
2009	A4	2028	D2	2044	D2	2063	C5	2B91	G1	2U19	D4	2U34	D4	2U61	F5	3002	A5	3011	A4	3024	A2	3034	A1	3048	A5	3067	A4	3806	C7	3U05	D5
2015	A4	2029	B2	2045	B2	2064	C5	2B93	G1	2U21	D4	2U39	D1	2U62	G4	3003	A4	3012	A5	3025	A1	3037	A2	3052	A2	3068	A4	3999	C2	3U06	D5
2016	A5	2030	A1	2046	A4	2065	C4	2H02	F7	2U23	D2	2U40	E5	2U63	F5	3004	A4	3013	A5	3027	A5	3038	A1	3055	A4	3070	A4	3B92	F3	3U07	E5
2019	A4	2031	A2	2047	A4	2071	C4	2U06	E5	2U24	D1	2U45	E2	2U64	F5	3005	A5	3016	C6	3028	A4	3040	A1	3056	A4	3071	A4	3H02	F7	3U08	E5
2021	A4	2032	A2	2048	A4	2072	C6	2U07	E5	2U26	D5	2U46	D4	2U65	G4	3006	A5	3019	C4	3029	C6	3041	A1	3057	A2	3075	A4	3H04	F7	3U09	E5
2023	A2	2034	A4	2050	A5	2077	A4	2U08	D5	2U27	D5	2U47	D4	2U71	G4	3007	A5	3020	C4	3030	A2	3043	A5	3061	A5	3089	A4	3U01	D4	3U10	E4

3U11	D4	3U24	D1	3U34	D1	3U48	D5	3U67	E4	6004	B5	6013	C5	6051	A4	6158	C6	6U02	G3	6U11	D5	6U27	G5	7009	A4	7U10	D2	9H10	F7	
3U12	D5	3U25	D1	3U38	D1	3U52	D2	3U68	D4	6005	A5	6015	A4	6077	B5	6159	D6	6U03	G5	6U12	F3	6U28	G4	7010	A2	7U17	D5	9U02	D2	
3U13	D5	3U27	D5	3U39	E1	3U55	D4	3U70	D4	6006	A4	6016	A4	6079	A6	6460	A8	6U04	E5	6U13	F5	6U51	D4	7017	A5	7U18	D5	9U57	D1	
3U16	G5	3U28	D3	3U40	D1	3U56	D4	3U71	D4	6007	C5	6017	A4	6080	A6	6461	A8	6U05	E5	6U15	D4	6U77	E4	7018	A5	7U30	E1			
3U19	G4	3U29	G5	3U41	D1	3U57	D2	3U75	D4	6008	C5	6020	A4	6081	B4	6A54	D7	6U06	D4	6U16	D3	6U79	D6	7030	A1	9002	A2			
3U20	G4	3U30	D1	3U43	D5	3U61	D5	3U89	D3	6009	A4	6022	A4	6154	D6	6A55	D7	6U07	F5	6U17	E4	6U81	E4	7U04	D4	9085	A1			
3U21	D4	3U31	E1	3U45	D5	3U64	D5	6001	A5	6010	A5	6023	A1	6155	D6	6D60	D8	6U08	G4	6U20	E4	7004	A4	7U07	G5	9806	C7			
3U22	E1	3U32	D1	3U46	D5	3U65	D5	6002	C4	6011	A5	6027	C6	6156	D7	6D61	D8	6U09	D4	6U22	D4	7007	C6	7U08	G4	9810	C7			
3U23	D1	3U33	D3	3U47	D4	3U66	D5	6003	C5	6012	C4	6028	C4	6157	E7	6U01	D5	6U10	D4	6U23	D1	7008	C5	7U09	D4	9H06	F7			

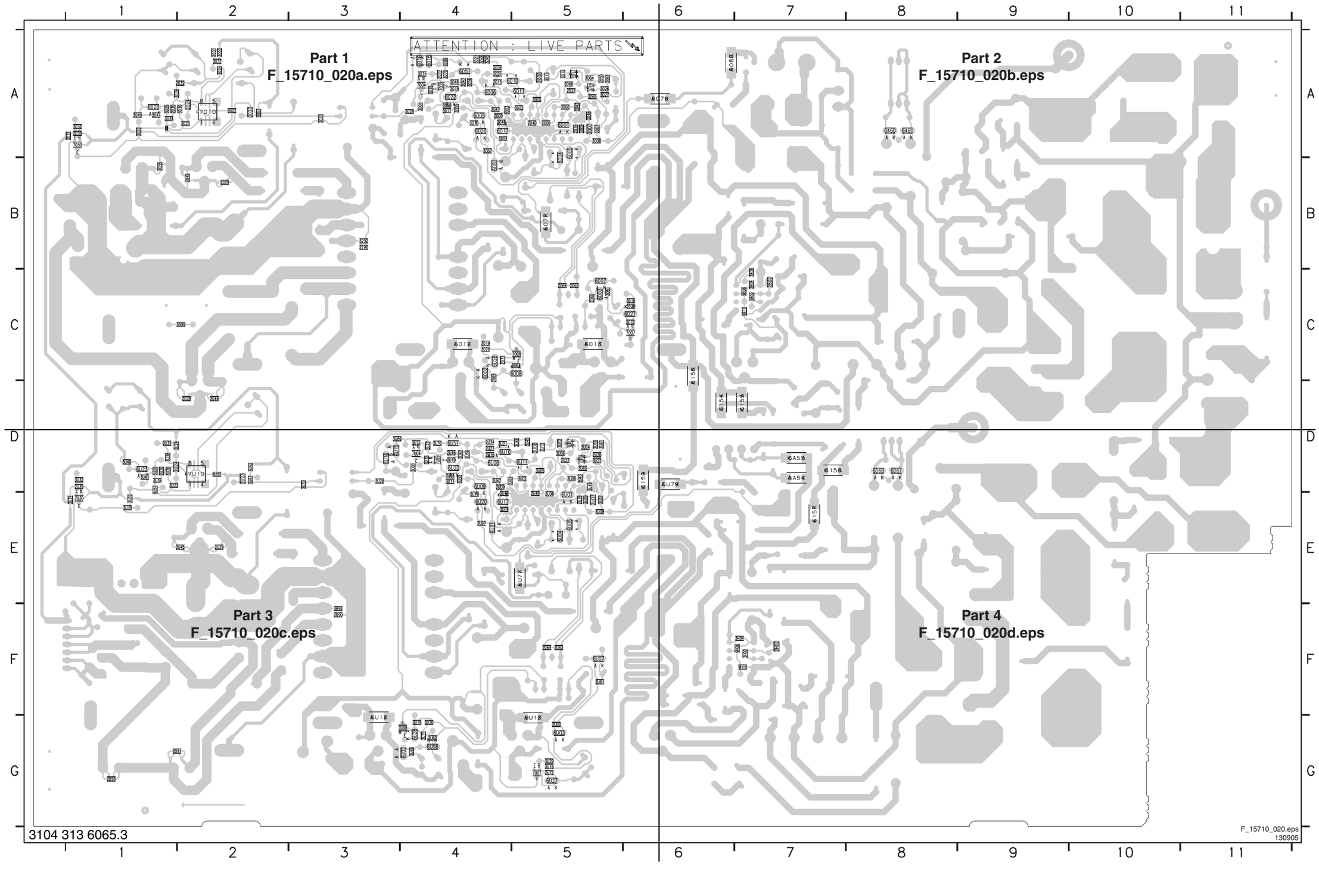

3104 313 6065.3

F_15710_020.eps
130905

Layout LCD Supply (42") (Part 1 Bottom Side)

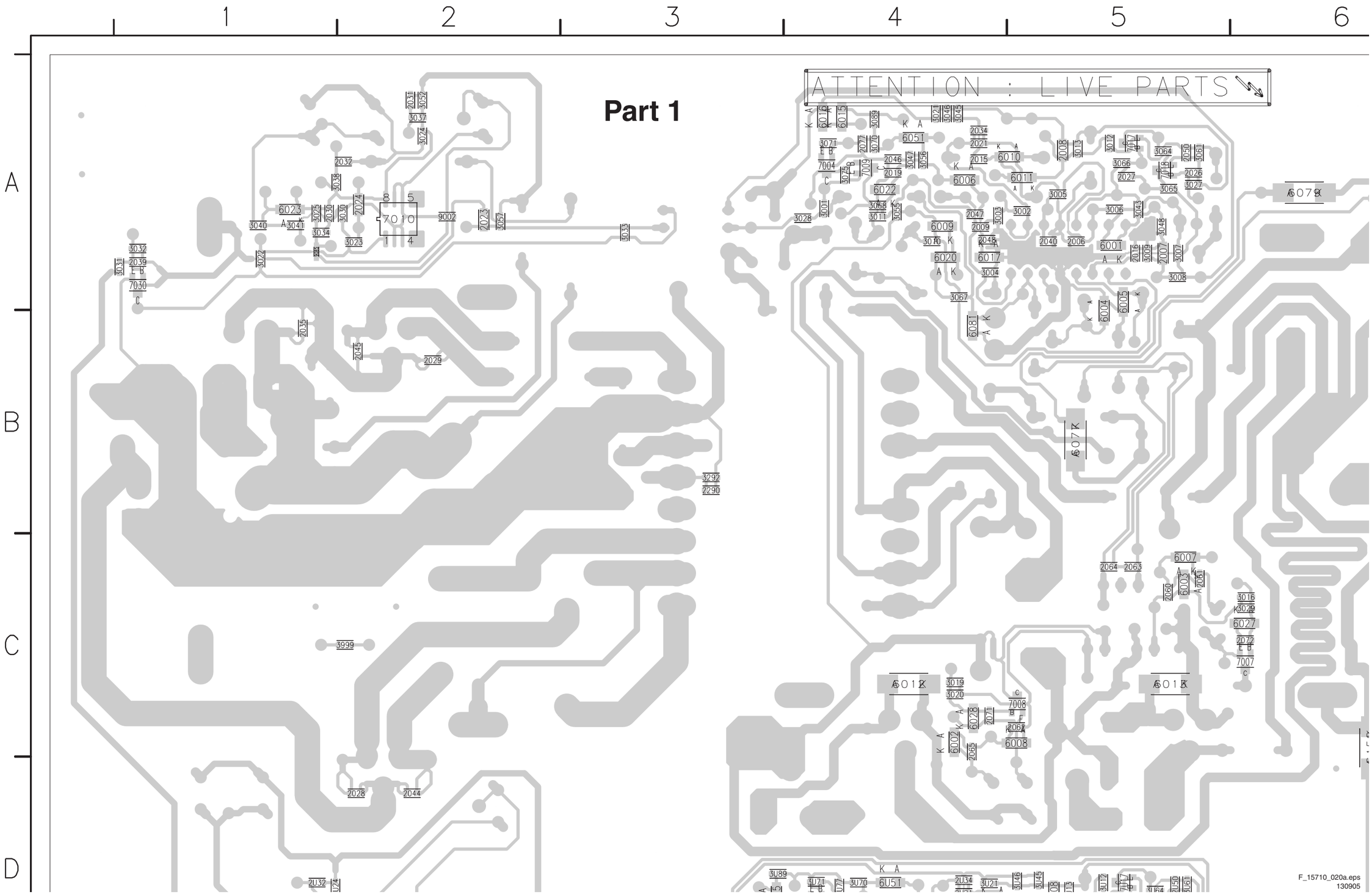

Layout LCD Supply (42”) (Part 2 Bottom Side)

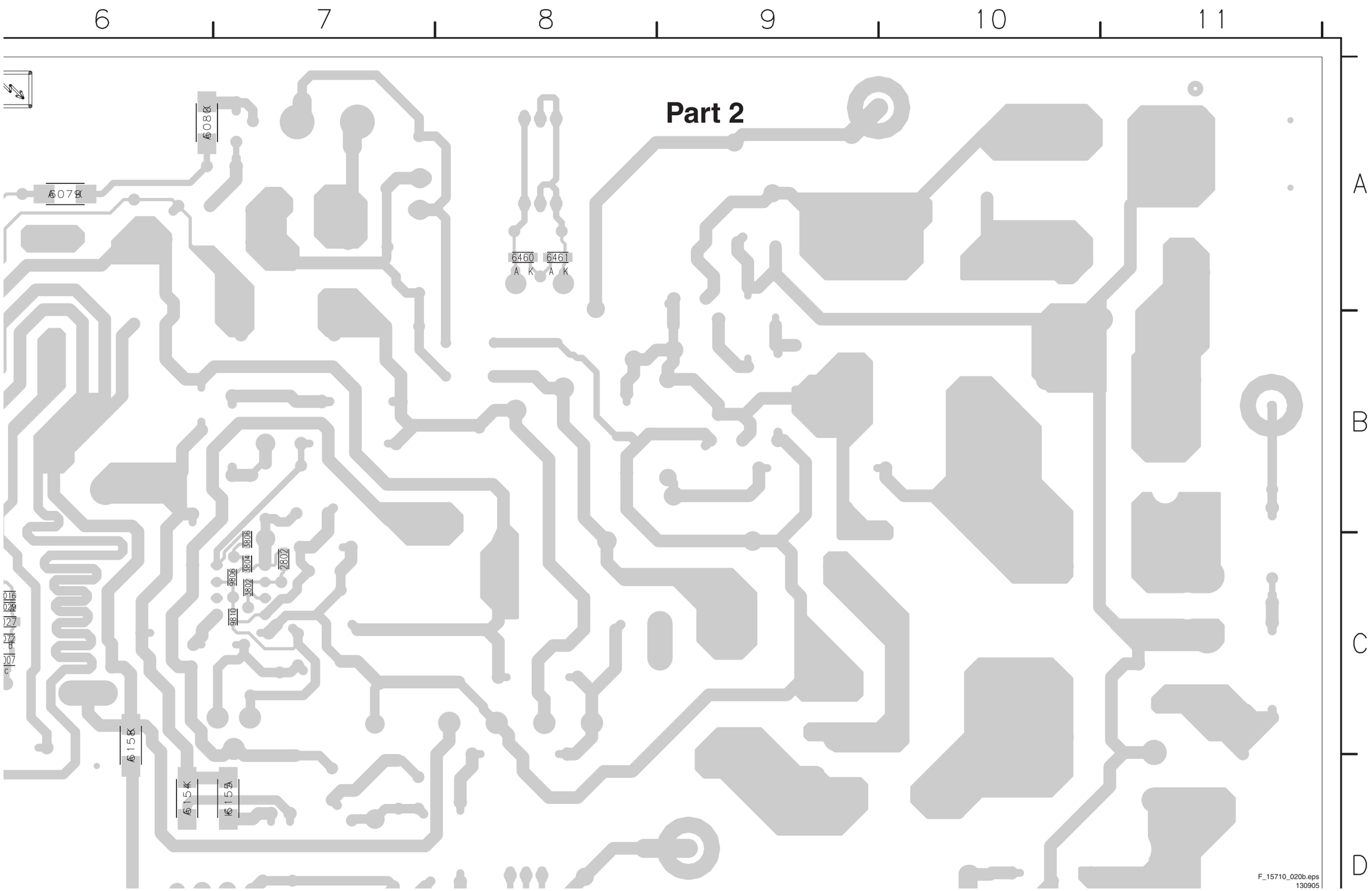

Layout LCD Supply (42”) (Part 3 Bottom Side)

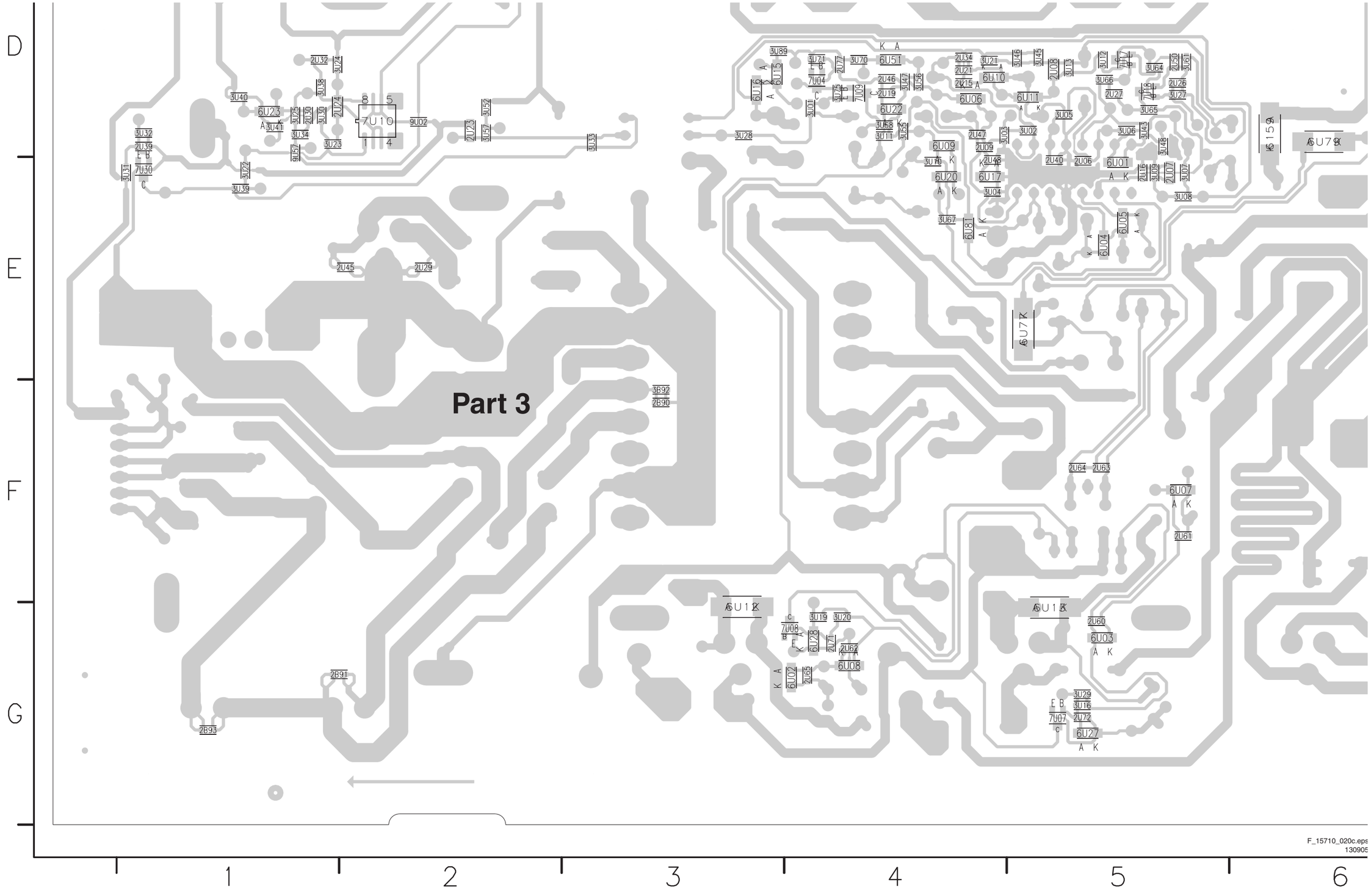

F_15710_020c.eps
130905

Layout LCD Supply (42”) (Part 4 Bottom Side)

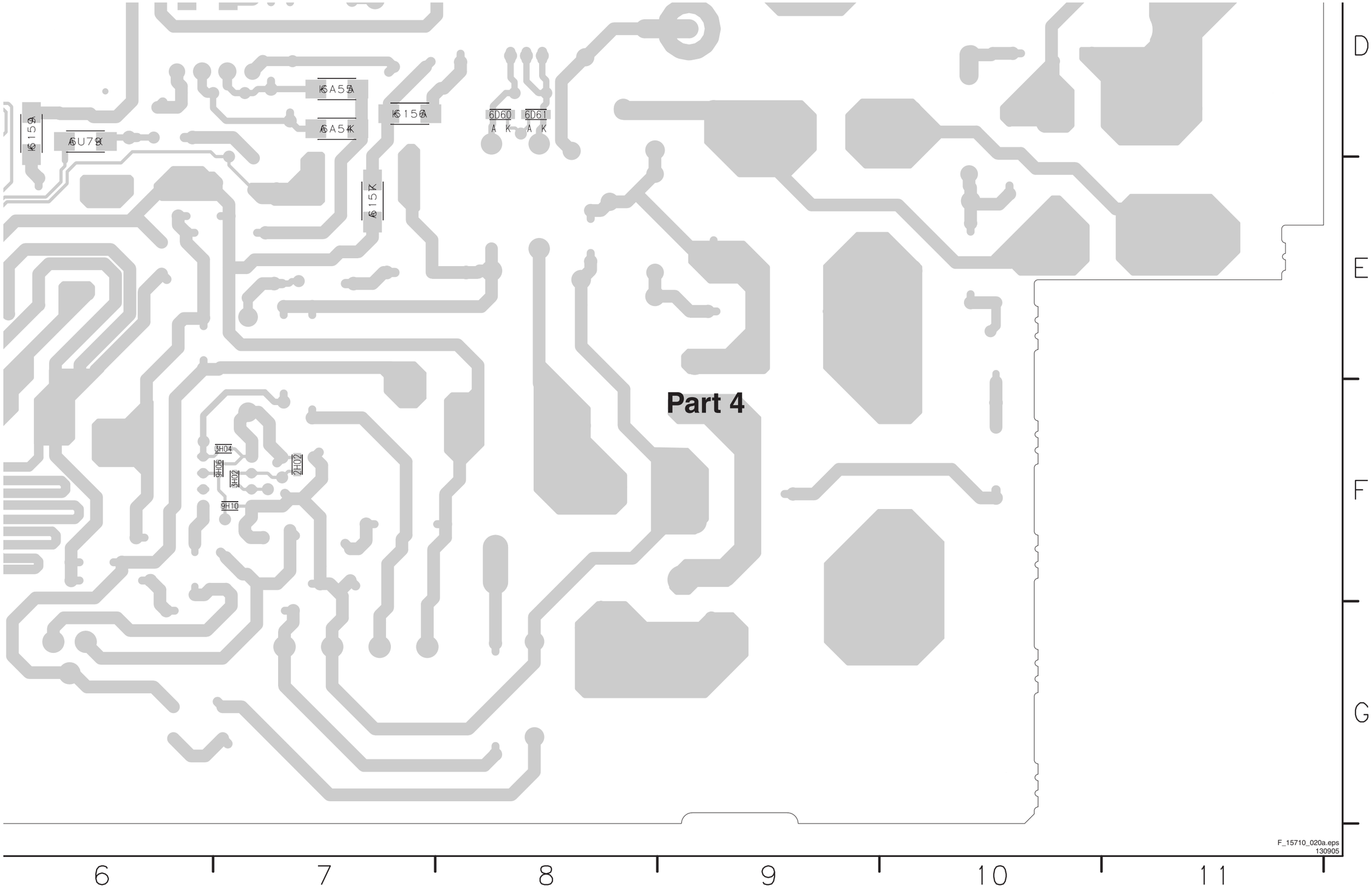

SSB: DC / DC

0M96 H3	2U13 C2	2U20 D9	2U27 B8	2U41 E11	3U01 C2	3U08 C6	3U15 E9	3U22 A5	3U29 D5	3U54 D11	3U87 A2	3U97 C6	3UA8 D8	6U22 D7	7U03-2 B7	7U13-2 A3	9U03 H14	FU08 D12	IU04 B4	IU11 C3	IU18 A6	IU25 C6	IU32 B6	IU45 C6	IU60 D8	IU78 B11
0M97 H4	2U14 A3	2U21 D9	2U28 B8	2U46 E13	3U02 C3	3U09 D6	3U16 E9	3U23 A6	3U30 D5	3U55 D10	3U88 A3	3UA1 B12	3UA9 D8	6U23 D8	7U05-1 C3	7U15-1 D10	FU01 A14	FU13 C7	IU05 B4	IU12 C2	IU19 A6	IU26 D7	IU36 B6	IU54 B8	IU61 G3	IU79 B12
1U01 A14	2U15 C4	2U22 C9	2U29 D8	2U58 B12	3U03 C3	3U10 C6	3U17 E9	3U24 A6	3U31 D4	3U56 D11	3U89 B2	3UA2 B11	5U00 A8	6U25 D12	7U05-2 C4	7U15-2 D10	FU02 B4	FU18 F12	IU06 B4	IU13 D6	IU20 A2	IU27 E7	IU37 E5	IU55 D8	IU62 A3	IU80 D12
2U09 F3	2U16 A5	2U23 F3	2U30 E8	2U72 B11	3U04 C3	3U11 E8	3U18 D9	3U25 B6	3U32 E4	3U82 C7	3U93 D10	3UA3 D12	5U02 A11	7U00 B5	7U07 E7	7U27 C13	FU03 A8	FU19 F12	IU07 B4	IU14 C6	IU21 B8	IU28 E8	IU40 D9	IU56 D10	IU63 A3	IU81 D13
2U10 G3	2U17 A5	2U24 B9	2U31 A6	2U73 D12	3U05 C4	3U12 B8	3U19 F9	3U26 B6	3U33 E4	3U83 C7	3U94 D11	3UA4 D14	5U03 C9	7U01-1 A6	7U10-1 D4	7U28 D12	FU05 E13	FU23 A4	IU08 C4	IU15 C6	IU22 B8	IU29 B6	IU41 D8	IU57 D11	IU65 D5	IU86 A7
2U11 E7	2U18 C6	2U25 A11	2U32 B7	2U85 B9	3U06 C5	3U13 B8	3U20 D8	3U27 B6	3U34 E5	3U85 A3	3U95 E11	3UA5 D13	6U11 E5	7U01-2 A6	7U10-2 D4	7U29-1 B12	FU06 C9	IU01 A14	IU09 C4	IU16 B6	IU23 A6	IU30 B6	IU42 A12	IU58 D10	IU66 D4	IU88 F9
2U12 C6	2U19 B8	2U26 D8	2U37 F9	3U00 C2	3U07 C6	3U14 D9	3U21 B8	3U28 B6	3U38 E6	3U86 A3	3U96 C7	3UA7 E11	6U21 E8	7U03-1 B6	7U13-1 A3	7U29-2 B11	FU07 E12	IU03 B3	IU10 C5	IU17 B6	IU24 A5	IU31 B6	IU44 C7	IU59 D11	IU68 E4	c111 E12

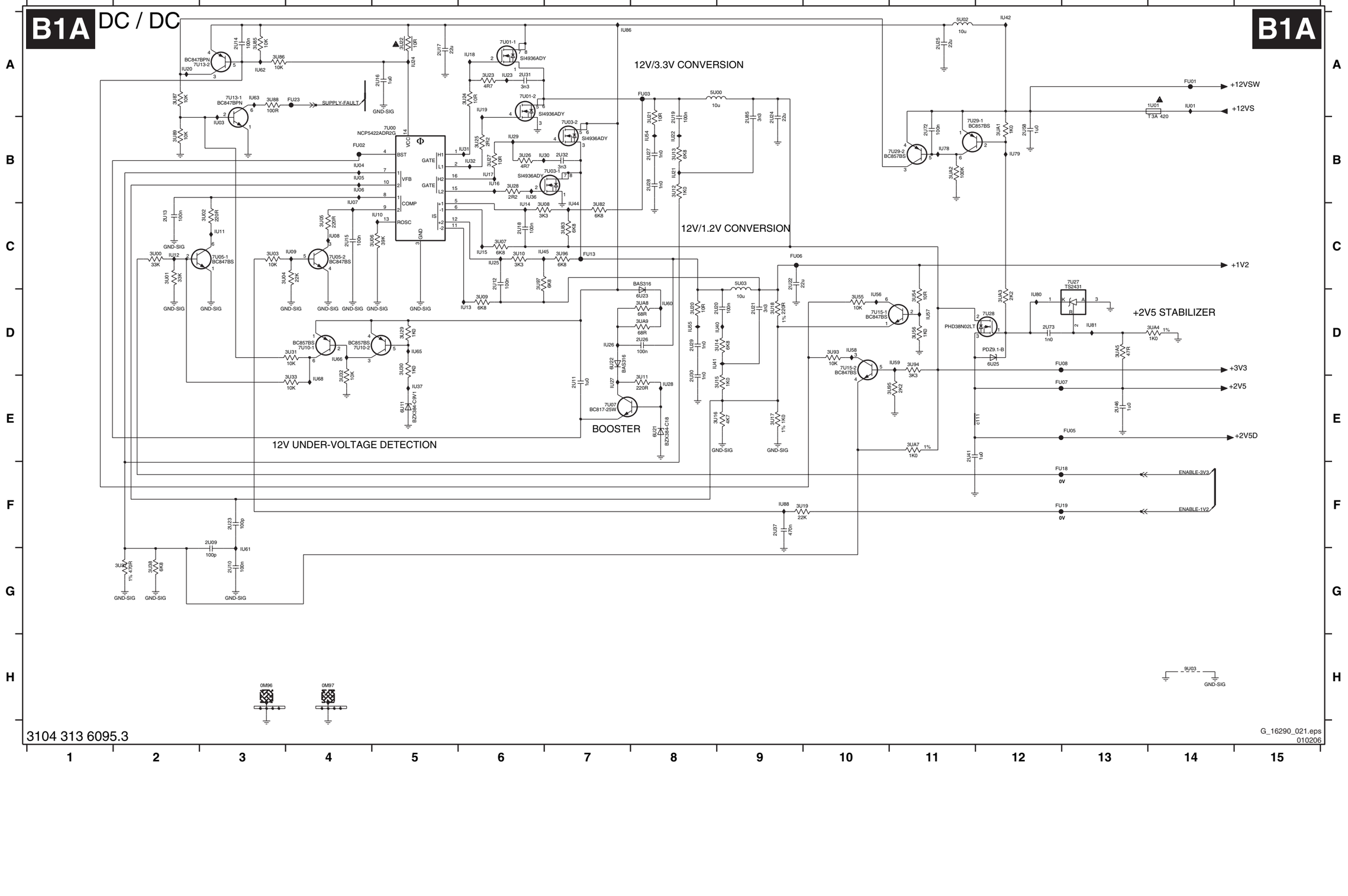

SSB: Supply + RS232

B1B SUPPLY + RS232

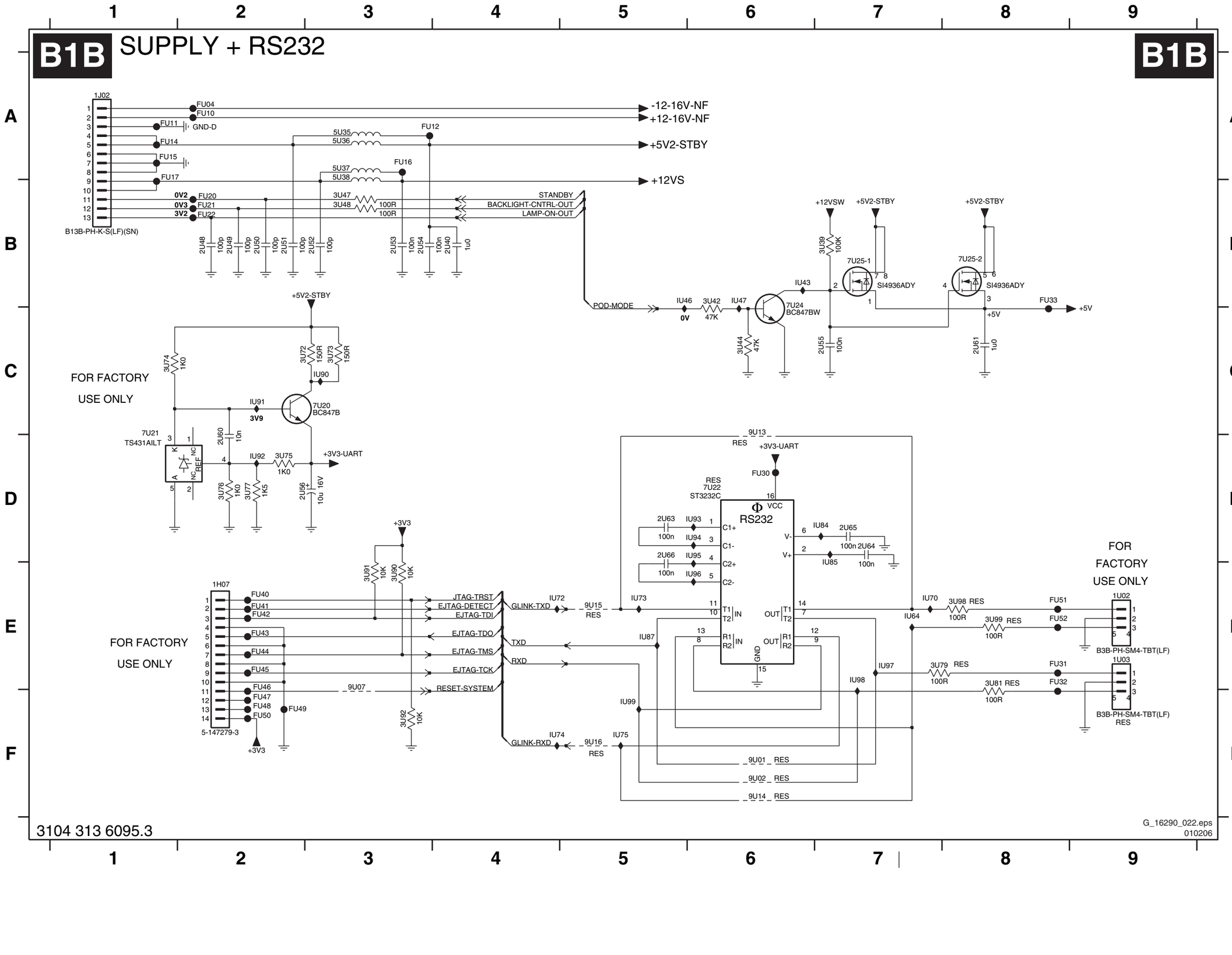

3104 313 6095.3

G_16290_022.eps
010206

1H07 E2	FU46 E2
1J02 A1	FU47 F2
1U02 E9	FU48 F2
1U03 E9	FU49 F2
2U40 B4	FU50 F2
2U48 B2	FU51 E8
2U49 B2	FU52 E8
2U50 B2	IU43 B6
2U51 B2	IU46 B5
2U52 B3	IU47 B6
2U53 B3	IU64 E7
2U54 B3	IU70 E7
2U55 C7	IU72 E4
2U56 D2	IU73 E5
2U60 D2	IU74 F4
2U61 C8	IU75 F5
2U63 D5	IU84 D7
2U64 D7	IU85 D7
2U65 D7	IU87 E5
2U66 D5	IU90 C3
3U39 B7	IU91 C2
3U42 B6	IU92 D2
3U44 C6	IU93 D6
3U47 B3	IU94 D6
3U48 B3	IU95 D6
3U72 C3	IU96 E6
3U73 C3	IU97 E7
3U74 C1	IU98 E7
3U75 D2	IU99 F5
3U76 D2	
3U77 D2	
3U79 E7	
3U81 E8	
3U90 E3	
3U91 E3	
3U92 F3	
3U98 E8	
3U99 E8	
5U35 A3	
5U36 A3	
5U37 A3	
5U38 A3	
7U20 C3	
7U21 D1	
7U22 D6	
7U24 C6	
7U25-1 B7	
7U25-2 B8	
9U01 F6	
9U02 F6	
9U07 E3	
9U13 C6	
9U14 F6	
9U15 E5	
9U16 F5	
FU04 A2	
FU10 A2	
FU11 A1	
FU12 A3	
FU14 A1	
FU15 A1	
FU16 A3	
FU17 A1	
FU20 B2	
FU21 B2	
FU22 B2	
FU30 D6	
FU31 E8	
FU32 E8	
FU33 B8	
FU40 E2	
FU41 E2	
FU42 E2	
FU43 E2	
FU44 E2	
FU45 E2	

SSB: Channel Decoder

B2A CHANNEL DECODER

B2A

1T10 H1 IT30 B1
1T11 E6 IT31 E7
2T30 A2 IT32 F7
2T31 B2 IT33 F6
2T33 B2 IT34 E6
2T34 C2 IT36 G8
2T35 D2 IT37 E7
2T36 D8 IT38 E6
2T37 D6 IT40 G6
2T38 D6 IT41 I5
2T39 D6 IT45 F1
2T40 D6 IT46 F2
2T41 D7 IT47 F1
2T42 D7 IT48 F2
2T43 D7 IT49 F2
2T44 D7 IT50 F3
2T45 D8 IT51 H4
2T46 D7 IT52 I2
2T47 D11 IT53 I3
2T48 D12 IT54 I4
2T49 D12
2T50 D12
2T52 E5
2T53 E6
2T54 E6
2T56 E7
2T57 E7
2T58 E6
2T59 E7
2T60 E12
2T61 F12
2T62 F7
2T63 F7
2T64 G2
2T65 G7
2T66 G7
2T67 H5
3T31 G5
3T35-1 G11
3T35-2 G12
3T35-3 G11
3T35-4 G12
3T36-1 G11
3T36-2 G12
3T36-3 G11
3T36-4 G12
3T37-1 F12
3T37-2 F12
3T37-3 F12
3T37-4 F12
3T38 G7
3T39 H7
3T40 F11
3T41 F7
3T42 F2
3T43 F11
3T44 F7
3T45 F1
3T46 F1
3T47 F2
3T48 F6
3T49 F3
3T50 F1
3T51 F6
3T52 F7
3T53 G6
3T54 G6
3T55 H2
3T56 H3
3T57 I3
3T58 I4
5T20 A2
5T21 B2
5T23 B2
5T24 C2
5T25 C2
5T26 D2
5T27 D2
5T28 E2
7T20-1 F1
7T20-2 F2
7T21 F3
7T22 E8
7T23 H4
9T10 G5
9T11 H3
9T12 H3
9T13 I5
AT35 E11
FT20 A2
FT21 B2
FT22 B2
FT23 C2
FT24 C2
FT25 D2
FT26 D2
FT27 E2
FT28 F3
FT29 F2
IT01 F12

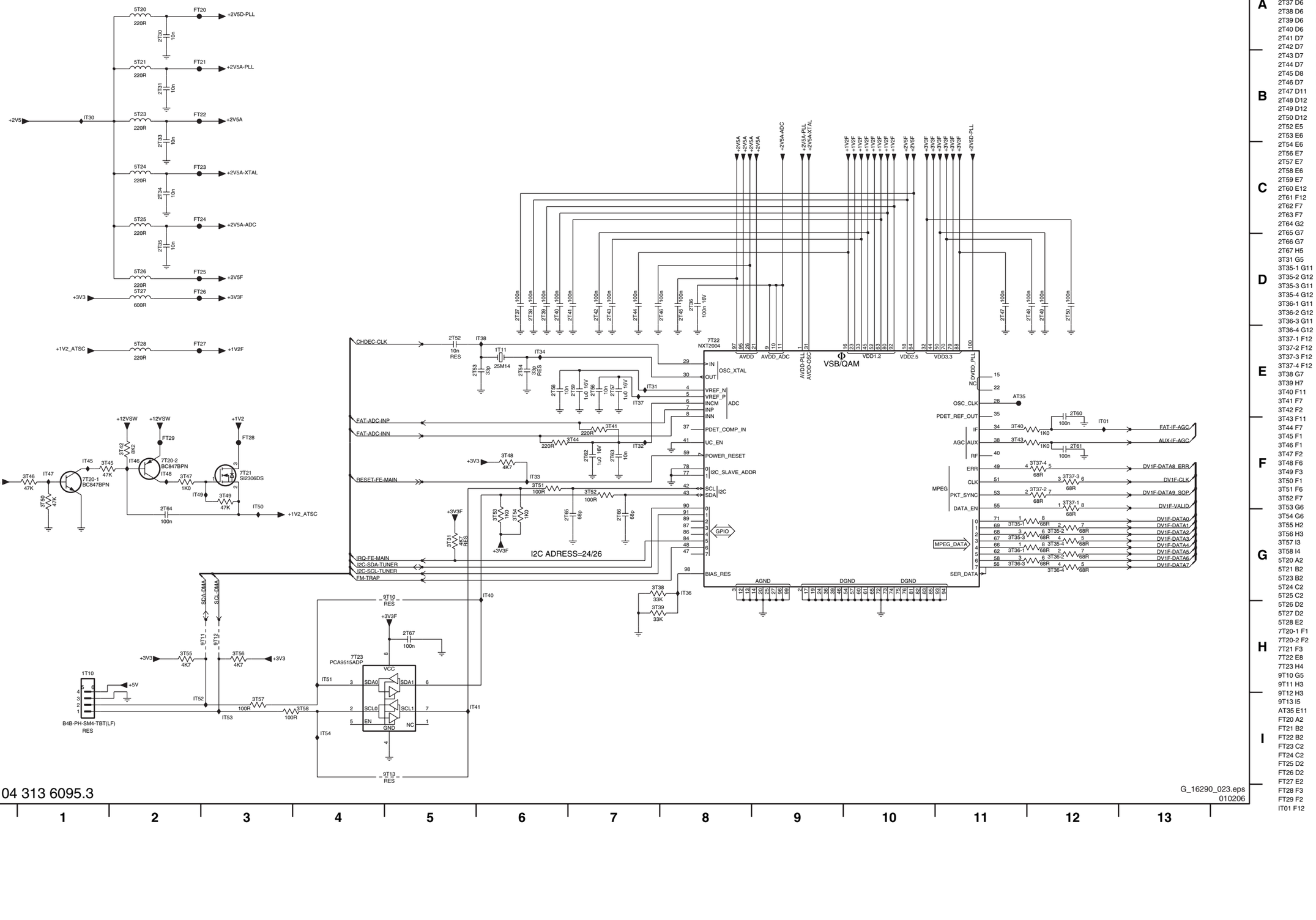

3104 313 6095.3

G_16290_023.eps
010206

SSB: Main Tuner

B2B MAIN TUNER

B2B

MAIN DIG TUNER C0

1T04
TD1316O/FGHP
TUNER
DC_PWR
+5V
OOB
RF_T
RF_GC
DNU
AS
SCL
SDA
NC
VTUN
IF_OUT
IF_AGC
IF_1
IF_2

+5VTUN
3T15 4K7
7T12 BC847BW
3T18 4K7
3T21 4K7
FT10
FT11
FT12
FT15
2T10 10n
2T25 10n
2T11 10n
2T12 10n
2T14 10n
2T13 10n
2T15 10n
2T18 10n
2T26 180p
2T27 180p
3T22 220R
3T23 220R
3T25 4K7
3T38 4K7
3T27 1K0
2T23 100n
IT08
IT09
IT10
IT11
IT12
IT13
IT14
IT15
IT16
IT26
IT27
1T01 X7351P 44M
AT13
AT14
AT20
AT23
2T19 10n
2T20 10n
7T13 UPC3218GV
INPUT1
INPUT2
VAGC
AGC CONTROL
VCC
OUTPUT1
OUTPUT2
GND1
GND2
IT17
IT18
IT19
IT21
IT22
IT24
IT25
2T16 1u0
2T17 10n
2T21 10n
FAT-ADC-INP
FAT-ADC-INN
2T22 10n
3T29 1K0
FT30
+12VSW
IT60
IT61
IT62
3T20 47R
3T10 47R
5T11 220R
7T10 LD1117DT
IN
OUT
COM
2T24 1u0
I2C-SCL-TUNER
I2C-SDA-TUNER
IF-ANA
FAT-IF-AGC
FM-TRAP
AUX-IF-AGC

3104 313 6095.3

G_16290_024.eps
010206

1T01 D5
1T04 B1
2T10 C1
2T11 C2
2T12 C2
2T13 C2
2T14 D2
2T15 D2
2T16 C8
2T17 D9
2T18 D2
2T19 D6
2T20 D6
2T21 D9
2T22 E7
2T23 E3
2T24 D12
2T25 C2
2T26 D2
2T27 E2
3T10 C12
3T15 C3
3T18 C4
3T20 C11
3T21 C4
3T22 E2
3T23 E2
3T25 E2
3T27 E2
3T28 E2
3T29 E7
5T11 C12
7T10 C11
7T12 C3
7T13 D7
AT13 D4
AT14 D4
AT20 D6
AT23 D6
FT10 C2
FT11 C3
FT12 D2
FT15 E3
FT30 E7
IT08 D2
IT09 D2
IT10 C2
IT11 C2
IT12 C2
IT13 C3
IT14 C1
IT15 C4
IT16 C4
IT17 D7
IT18 D9
IT19 D9
IT21 D9
IT22 D9
IT24 D7
IT25 D7
IT26 F2
IT27 F2
IT60 C11
IT61 C11
IT62 C12

SSB: MPIF Main: Video Source Selection

B3A MPIF MAIN: VIDEO SOURCE SELECTION

B3A

7A00-4
PNX3000HL/N2

SOURCE SELECT
AND DATA LINK

CVBSOUTIF-MAIN
AV1_CVBS
CVBS-IN
AV2_Y-CVBS
AV2_C
FRONT_Y-CVBS
FRONT_C
AV7_Y-CVBS
FRONT_Y-CVBS
FRONT_C
AUDIO-IN5-L
AUDIO-IN5-R
AUDIO-HDPH-L-AP
AUDIO-HDPH-R-AP
SDA-DMA
SCL-DMA
POWER-DOWN_BOLT-ON
AUDIO-IN3-R
AUDIO-IN3-L
CVBS-IN
DMMI_B-PB-IN
DMMI_G-Y-IN
DMMI_R-PR-IN
H_SYNC_IN
AV1-AV6_FBL-HSYNC
AUDIO-OUT1-L
AUDIO-OUT1-R
RC
V_SYNC_IN
HP-DET-R-DC
SC-STANDBY
ITV-IR-SW-RESET

CVBS_IF
CVBS1
CVBS2
CVBS_DTV
CVBS|Y3
C3
CVBS|Y4
C4
Y_COMB
C_COMB
GND_VSW
R|PR|V_1
G|Y|Y_1
B|PB|U_1
R|PR|V_2
G|Y|Y_2
B|PB|U_2
VCC_DIG
GND_DIG
VD2V5
FUSE10
VCC_I2D
GND_I2D

CVBS_OUTA
CVBS_OUTB
STROBE1N
STROBE1P
DATA1N
DATA1P
STROBE3N
STROBE3P
DATA3N
DATA3P
STROBE2N
STROBE2P
DATA2N
DATA2P
HV_PRIM
HV_SEC

STROBE1N-MAIN
STROBE1P-MAIN
DATA1N-MAIN
DATA1P-MAIN
STROBE3N-MAIN
STROBE3P-MAIN
DATA3N-MAIN
DATA3P-MAIN
STROBE2N-MAIN
STROBE2P-MAIN
DATA2N-MAIN
DATA2P-MAIN
HV-PRM-MAIN

+5V
7A20 BC847BW
+3V3-STANDBY

1M36
B11B-PH-K
1A01
AF732L-N2G1A
1MM1 EMC HOLE
0T00
0T10
0T11
0T12
0T13

3104 313 6095.3

G_16290_025.eps
010206

0T00 I3
0T10 I4
0T11 I5
0T12 I6
0T13 I6
1A01 F7
1M36 D5
1MM1 I2
2A04 F3
2A05 G4
2A06 H3
2A07 E3
2A08 E3
2A09 E3
2A10 B3
2A11 B3
2A12 B3
2A13 B4
2A14 B5
2A15 C3
2A16 C3
2A17 C3
2A18 C3
2A20 C5
2A21 C6
2A23 E4
2A24 E4
2A25 E4
2A26 E10
2A27 E8
2A29 D8
2A30 B3
2A31 C3
2A32 E8
2A94 C8
2A95 C8
2A96 D7
2A97 A11
3A01 G3
3A02 G4
3A03 G4
3A04 B11
3A05 G3
3A06 G3
3A60 D3
3A61 D2
3A62 E3
3A63 E2
5A10 D7
5A11 E7
5A64 E3
5A65 E2
7A00-4 A9
7A20 A11
AA47 H7
FA01 G7
FA02 G7
FA03 G7
FA10 D12
FA11 D8
FA12 E8
FA25 D4
FA26 D4
FA27 E4
FA28 E4
FA29 E4
FA30 E4
FA31 E4
FA32 F7
FA33 F7
FA34 F7
FA35 F7
FA36 F7
FA37 F7
FA38 F7
FA39 G7
FA40 G7
FA41 G7
FA42 G7
FA43 G7
FA44 H7
FA45 H7
FA46 H7
FC02 B6
IA10 B3
IA11 B4
IA12 B4
IA13 B10
IA14 B5
IA15 B10
IA16 C6
IA17 C5
IA18 D10
IA19 D8

SSB: MPIF Main: Supply

B3B MPIF MAIN: SUPPLY

B3B

7A00-3
PNX3000HL/N2

MPIF-SUPPLY
E/W & CONTROL

VOUTO 2
VAUDS 3
VDEFLO 20
VDEFLS 21
RREF 13
BGDEC 7
FUSE9 33
FUSE8 10
FUSE7 23
GND_FILT 11
GND_RGB 29
GND_VADC 34
VCC_FILT 14
VCC_RGB 28
VCC_VADC 35
TESTPIN3 18
TESTPIN2 24
EWVIN 36
REW 38
EWIOUT 37
SCL 44
SDA 43
IRQ 42
XREF 40
ADR 39
FUSE6 41

IA20 3V9
7A10 BC847BW
FA13 5A12 220R +5V
2A35 100n
IA21 3V2
9A10
FA14 3V2 VREF-AUD-POS
2A37 100u 4V
3A10 560R
IA22
2A38 1n0
3A11 1K2
IA23 1V4
VREF-AUD
3A12 1K2
IA24 3A13 47K
IA25
2A39 100n
2A40 1u0
2A41 1u0
FA15 5A13 220R +5V
FA16 5A14 220R +5V
2A42 10u 16V
2A43 100n
FA17 5A15 220R +5V
2A44 100n
2A45 100n
+5V
3A16 10K RES
IA26
IA27
IA28 3A14 100R SCL-DMA
IA29 3A15 100R SDA-DMA
IRQ-MPIF
IA30
3A21 470R
AC40
CLK-MPIF

2A35 A6
2A37 B6
2A38 B5
2A39 C4
2A40 C4
2A41 C4
2A42 D6
2A43 D6
2A44 E5
2A45 E4
3A10 B5
3A11 B5
3A12 B5
3A13 C4
3A14 F4
3A15 F4
3A16 E5
3A21 F6
5A12 A6
5A13 D7
5A14 D5
5A15 E4
7A00-3 B2
7A10 A5
9A10 A6
AC40 F6
FA13 A6
FA14 A7
FA15 D6
FA16 D5
FA17 E4
IA20 A5
IA21 A6
IA22 B5
IA23 B5
IA24 C4
IA25 C4
IA26 E3
IA27 E3
IA28 F3
IA29 F3
IA30 F6

3104 313 6095.3

G_16290_026.eps
010206

SSB: MPIF Main: IF & SAW Filter

B3C MPIF MAIN: IF + SAW FILTER

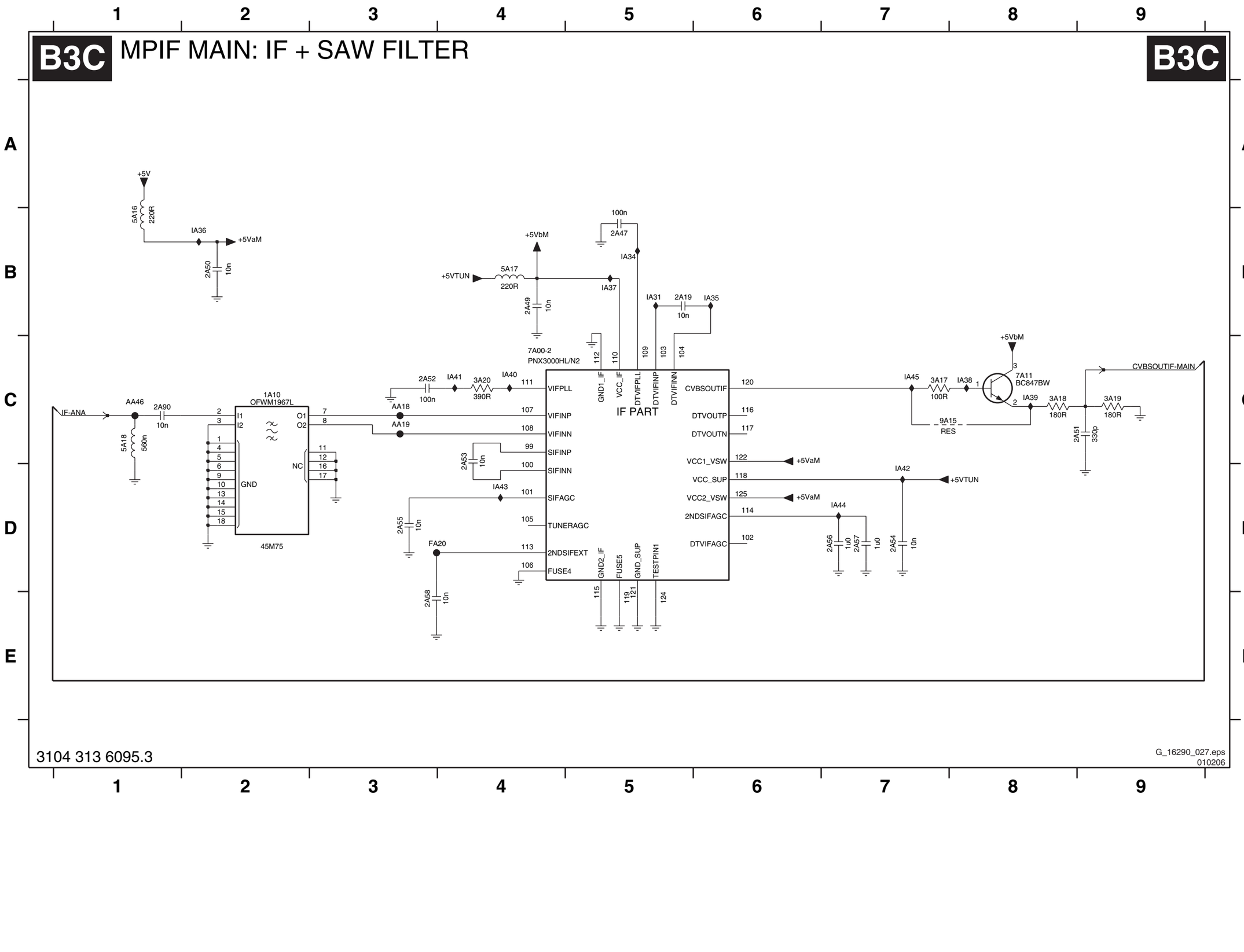

1A10 C2
2A19 B5
2A47 B5
2A49 B4
2A50 B2
2A51 C9
2A52 C3
2A53 C4
2A54 D7
2A55 D3
2A56 D7
2A57 D7
2A58 E3
2A90 C1
3A17 C7
3A18 C8
3A19 C9
3A20 C4
5A16 B1
5A17 B4
5A18 C1
7A00-2 C4
7A11 C8
9A15 C7
AA18 C3
AA19 C3
AA46 C1
FA20 D3
IA31 B5
IA34 B5
IA35 B6
IA36 B2
IA37 B5
IA38 C8
IA39 C8
IA40 C4
IA41 C4
IA42 D7
IA43 D4
IA44 D7
IA45 C7

3104 313 6095.3

G_16290_027.eps
010206

SSB: MPIF Main: Audio Source Selection

B3D MPIF MAIN: AUDIO SOURCE SELECTION

B3D

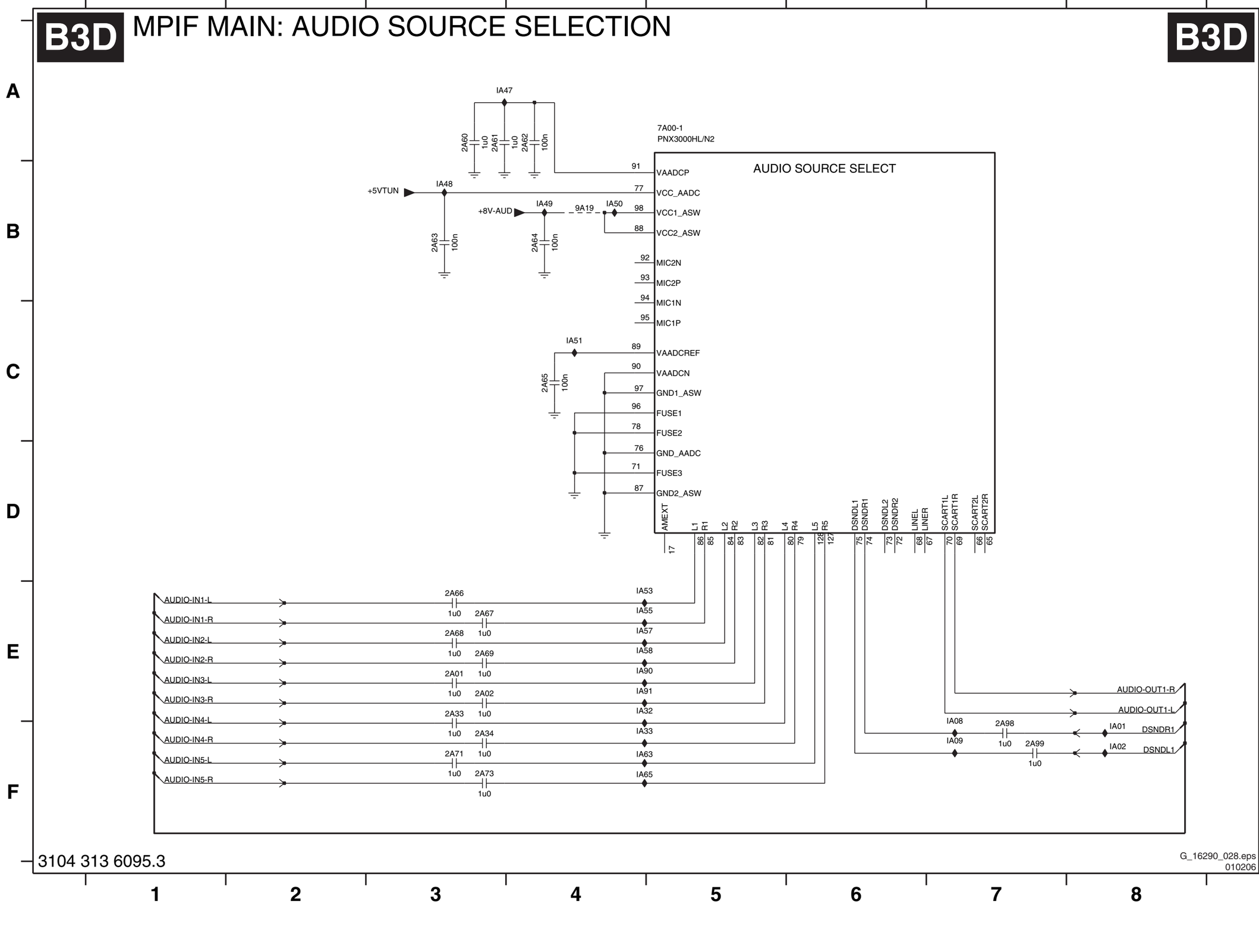

2A01 E3
2A02 E3
2A33 E3
2A34 F3
2A60 A3
2A61 A3
2A62 A4
2A63 B3
2A64 B4
2A65 C4
2A66 E3
2A67 E3
2A68 E3
2A69 E3
2A71 F3
2A73 F3
2A98 F7
2A99 F7
7A00-1 A5
9A19 B4
IA01 F8
IA02 F8
IA08 E7
IA09 F7
IA32 E4
IA33 F4
IA47 A3
IA48 B3
IA49 B4
IA50 B4
IA51 C4
IA53 E4
IA55 E4
IA57 E4
IA58 E4
IA63 F4
IA65 F4
IA90 E4
IA91 E4

3104 313 6095.3

G_16290_028.eps
010206

SSB: MPIF Main: Audio Amplifier

B3E MPIF MAIN: AUDIO AMPLIFIER

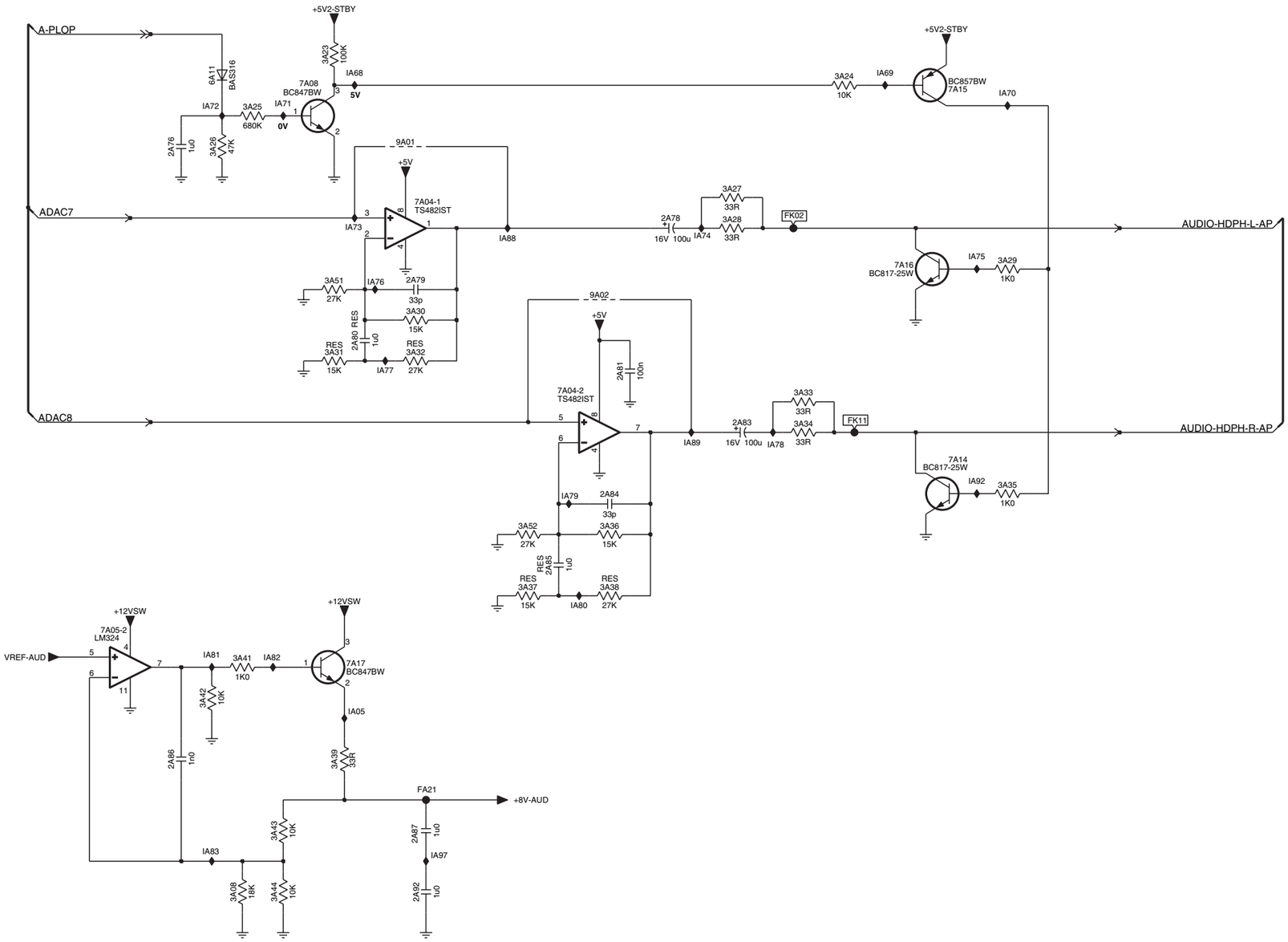

3104 313 6095.3

G_16290_029.eps
010206

2A76 B2
2A78 C5
2A79 C4
2A80 C3
2A81 D5
2A83 D6
2A84 E5
2A85 E5
2A86 F2
2A87 G4
2A92 G4
3A08 G2
3A23 A3
3A24 B7
3A25 B3
3A26 B2
3A27 B6
3A28 C6
3A29 C8
3A30 C4
3A31 D3
3A32 D4
3A33 D6
3A34 D6
3A35 D8
3A36 E5
3A37 E5
3A38 E5
3A39 F3
3A41 F2
3A42 F2
3A43 G3
3A44 G3
3A51 C3
3A52 E4
6A11 B2
7A04-1 C4
7A04-2 D5
7A05-2 E1
7A08 B3
7A14 D8
7A15 B7
7A16 C7
7A17 F3
9A01 B4
9A02 C5
FA21 G4
FK02 C6
FK11 D7
IA05 F3
IA68 B3
IA69 B7
IA70 B8
IA71 B3
IA72 B2
IA73 C3
IA74 C6
IA75 C8
IA76 C3
IA77 D3
IA78 D6
IA79 E5
IA80 E5
IA81 F2
IA82 F3
IA83 G2
IA88 C4
IA89 D6
IA92 D8
IA97 G4

SSB: PNX2015: Audio / Video

B4A PNX2015: Audio / Video

B4A

VREF-AUD-POS
2J01 100n
7J00-7 PNX2015
Φ
AUDIO / VIDEO
Y5 ADAC_CLK
ADAC1 AH1 AH2 AH3 ADAC1 ADAC1N ADAC1P 2LA5 3n3
ADAC2 AG1 AG2 AG3 ADAC2 ADAC2N ADAC2P 2LA6 3n3
AF1 AF2 AG4 ADAC3 ADAC3N ADAC3P
AE1 AE2 AB5 ADAC4 ADAC4N ADAC4P
AD1 AD2 AB4 ADAC5 ADAC5N ADAC5P
AC1 AC2 AB3 ADAC6 ADAC6N ADAC6P
ADAC7 AB1 AB2 AA4 ADAC7 ADAC7N ADAC7P 2LA8 3n3
ADAC8 AA1 AA2 AA3 ADAC8 ADAC8N ADAC8P 2LA9 3n3
DSNDL1 AF3 AF4 AF5 ADAC9 ADAC9N ADAC9P 2L65 3n3
DSNDR1 AE3 AE4 AE5 ADAC10 ADAC10N ADAC10P 2L66 3n3
AD3 AD4 AD5 ADAC11 ADAC11N ADAC11P
AC3 AC4 AC5 ADAC12 ADAC12N ADAC12P
I2S-MCH-LR U2 I2S_IN_SD1
I2S-MCH-CSW U3 I2S_IN_SD2
I2S-MCH-SLR U4 I2S_IN_SD3
I2S-MAIN-D V4 I2S_IN_SD4
I2S-SUB-D V5 I2S_IN_SD5
W5 I2S_IN_SD6
I2S-BCLK-MAIN V2 I2S_SCK_SYS
I2S-WS-MAIN V3 I2S_WS_SYS
CLK-MPIF M4 MPIF_CLK
U1 I2S_SCK_XTRA
U5 I2S_WS_XTRA

AVP1_DLK_VDDA N5
AVP1_DLK_VDDD M5
AVP1_DLK_VSSA P5
AVP1_DLK_VSSD R5
AVP1_DLK1DN R2 DATA1N-MAIN
AVP1_DLK1DP R1 DATA1P-MAIN
AVP1_DLK1SN R4 STROBE1N-MAIN
AVP1_DLK1SP R3 STROBE1P-MAIN
AVP1_DLK2DN P2 DATA2N-MAIN
AVP1_DLK2DP P1 DATA2P-MAIN
AVP1_DLK2SN P4 STROBE2N-MAIN
AVP1_DLK2SP P3 STROBE2P-MAIN
AVP1_DLK3DN N2 DATA3N-MAIN
AVP1_DLK3DP N1 DATA3P-MAIN
AVP1_DLK3SN N4 STROBE3N-MAIN
AVP1_DLK3SP N3 STROBE3P-MAIN
AVP1_DTC_CLVSS T6
AVP1_DTC_VDD3 T3
AVP1_DTC_VDDA T4
AVP1_DTC_VSSA T5
AVP1_HSYNCFBL1 T1
AVP1_HSYNCFBL2 T2
AVP1_HVINFO1 M3
AVP1_VSYNC1 M1
AVP1_VSYNC2 M2
AVP2_DLK_VDDA H5
AVP2_DLK_VDDD G6
AVP2_DLK_VSSA J5
AVP2_DLK_VSSD K5
AVP2_DLK1DN K2
AVP2_DLK1DP K1
AVP2_DLK1SN K4
AVP2_DLK1SP K3
AVP2_DLK2DN J2
AVP2_DLK2DP J1
AVP2_DLK2SN J4
AVP2_DLK2SP J3
AVP2_DLK3DN H2
AVP2_DLK3DP H1
AVP2_DLK3SN H4
AVP2_DLK3SP H3
AVP2_DTC_CLVSS K6
AVP2_DTC_VDD3 L3
AVP2_DTC_VDDA L4
AVP2_DTC_VSSA L5
AVP2_HSYNCFBL1 L1
AVP2_HSYNCFBL2 L2
AVP2_HVINFO1 G3
AVP2_VSYNC1 G1
AVP2_VSYNC2 G2
I2S_OUT_SCK Y2
I2S_OUT_SD1 W1
I2S_OUT_SD2 W2
I2S_OUT_SD3 V1
I2S_OUT_SD4 W3
I2S_OUT_SD5 W4
I2S_OUT_SD6 Y4
I2S_OUT_WS Y3

9J22 9J24
AV1-AV6_FBL-HSYNC
AV2_FBL
HV-PRM-MAIN
AV6_VSYNC
3J13 120R
3J12 120R
3JA2 120R AV2_FBL
3J01 120R AV6_VSYNC
3J07 68R I2S-MAIN-ND

IJ00 2J03 100n 5J00 120R +1V2
IJ01 2J06 100n 5J01 120R
IJ02 2J08 100n 5J02 120R +3V3
IJ03 2J10 100n 5J03 120R +1V2
IJ04 2J13 100n 5J04 120R +1V2
IJ05 2J16 100n 5J05 120R
IJ06 2J18 100n 5J06 120R +3V3
IJ07 2J20 100n 5J07 120R +1V2

0E02 0E03

+12VSW IJ53 6J07 BAS316
+5V2-STBY IJ54 6J08 BAT54 COL
IJ09 11V3
3L01 100K 3L00 100K 2LT0 1u0
IJ55
RESET-AUDIO FLA8 3L03 470K IJ11 0V
7J01 BC847BW
IJ25 11V1 3L02 10K IJ26 11V1
7J02-2 BC847BPN
IJ27 0V
A-PLOP
7J02-1 BC847BPN

3104 313 6095.3
G_16290_030.eps 010206

0E02 F5
0E03 F5
2J01 A1
2J03 A6
2J06 B6
2J08 B6
2J10 C6
2J13 E6
2J16 E6
2J18 E6
2J20 F6
2L65 D1
2L66 D1
2LA5 B1
2LA6 B1
2LA8 C1
2LA9 D1
2LT0 E9
3J01 E4
3J07 F4
3J12 C4
3J13 C4
3JA2 E4
3L00 E9
3L01 E8
3L02 E9
3L03 E8
5J00 A6
5J01 B6
5J02 B6
5J03 C6
5J04 D6
5J05 E6
5J06 E6
5J07 F6
6J07 D9
6J08 D9
7J00-7 A3
7J01 E8
7J02-1 F9
7J02-2 E9
9J22 C4
9J24 C5
FLA8 E7
IJ00 A5
IJ01 B5
IJ02 B5
IJ03 C5
IJ04 D6
IJ05 E6
IJ06 E6
IJ07 F6
IJ09 E9
IJ11 E8
IJ25 E9
IJ26 E9
IJ27 F8
IJ53 D9
IJ54 D9
IJ55 E8

SSB: PNX2015: DV I/O Interface

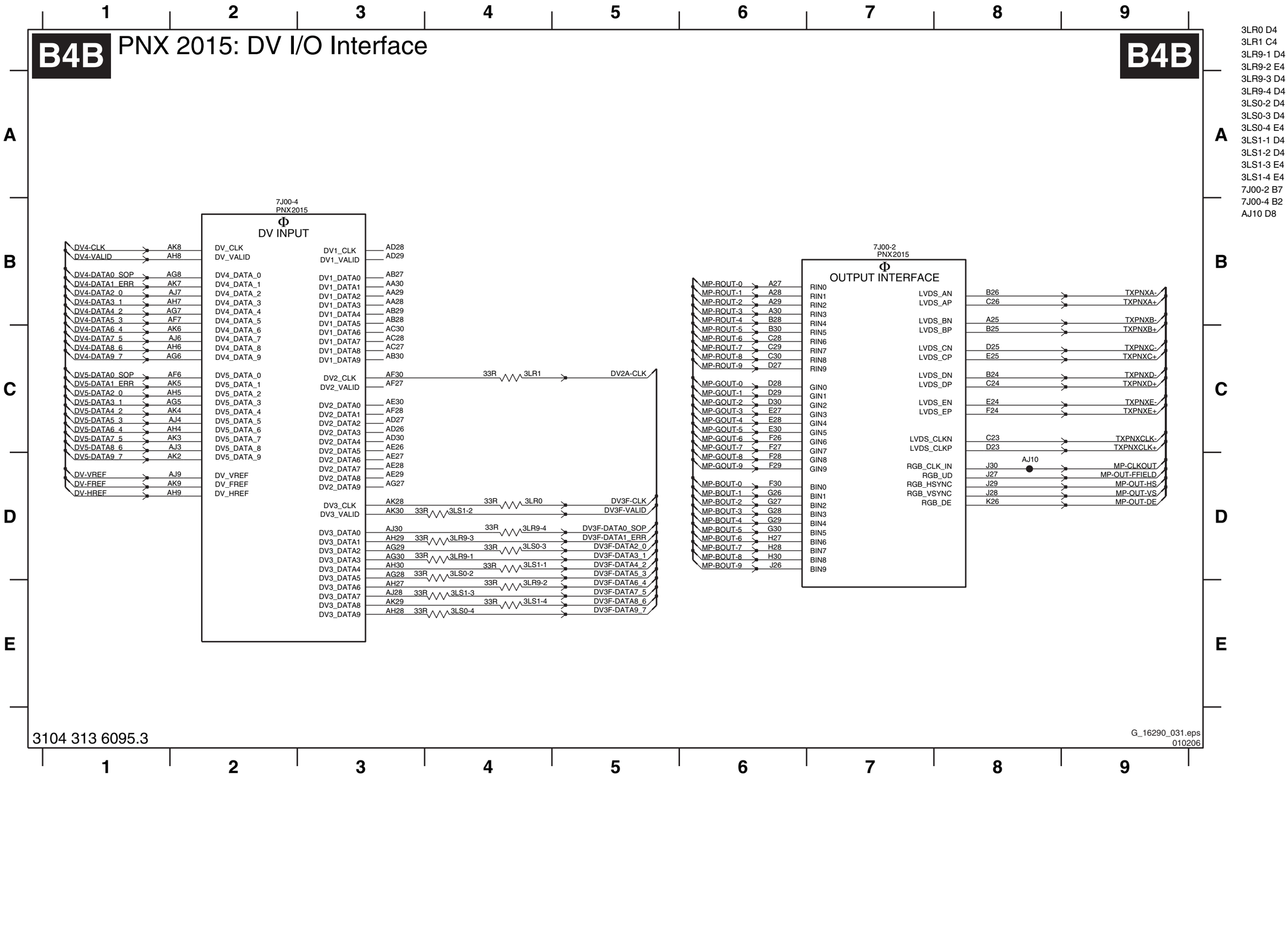

3104 313 6095.3

G_16290_031.eps
010206

SSB: PNX2015: Tunnelbus

B4C PNX 2015: TUNNELBUS

B4C

7J00-1
PNX2015
Φ
TUNNELBUS

A1	TUNN_TX_BUSY	TUNS_TX_BUSY	R28		TUN-VIPER-RX-BUSY
D2	TUNN_TX_CLKN	TUNS_TX_CLKN	M30		
C2	TUNN_TX_CLKP	TUNS_TX_CLKP	M29	3L10 33R	TUN-VIPER-RX-CLKP
C4	TUNN_TX_D0	TUNS_TX_D0	K28	3L12-2 33R	TUN-VIPER-RX-DATA0
B4	TUNN_TX_D1	TUNS_TX_D1	K27	3L12-1 33R	TUN-VIPER-RX-DATA1
A4	TUNN_TX_D2	TUNS_TX_D2	L30	3L13-4 33R	TUN-VIPER-RX-DATA2
F3	TUNN_TX_D3	TUNS_TX_D3	L28	3L13-3 33R	TUN-VIPER-RX-DATA3
B3	TUNN_TX_D4	TUNS_TX_D4	K29	3L12-4 33R	TUN-VIPER-RX-DATA4
C3	TUNN_TX_D5	TUNS_TX_D5	N26	3L13-2 33R	TUN-VIPER-RX-DATA5
D3	TUNN_TX_D6	TUNS_TX_D6	L27	3L13-1 33R	TUN-VIPER-RX-DATA6
E3	TUNN_TX_D7	TUNS_TX_D7	K30	3L12-3 33R	TUN-VIPER-RX-DATA7
F2	TUNN_TX_D8	TUNS_TX_D8	M27	3L14-4 33R	TUN-VIPER-RX-DATA8
A3	TUNN_TX_D9	TUNS_TX_D9	N28	3L14-1 33R	TUN-VIPER-RX-DATA9
F1	TUNN_TX_D10	TUNS_TX_D10	N27	3L11-4 33R	TUN-VIPER-RX-DATA10
A2	TUNN_TX_D11	TUNS_TX_D11	P28	3L11-3 33R	TUN-VIPER-RX-DATA11
B1	TUNN_TX_D12	TUNS_TX_D12	P27	3L11-2 33R	TUN-VIPER-RX-DATA12
C1	TUNN_TX_D13	TUNS_TX_D13	N30	3L14-3 33R	TUN-VIPER-RX-DATA13
D1	TUNN_TX_D14	TUNS_TX_D14	N29	3L14-2 33R	TUN-VIPER-RX-DATA14
E1	TUNN_TX_D15	TUNS_TX_D15	R29	3L11-1 33R	TUN-VIPER-RX-DATA15
D9	TUNN_RX_D0	TUNS_RX_D0	R27		TUN-VIPER-TX-DATA0
C9	TUNN_RX_D1	TUNS_RX_D1	P30		TUN-VIPER-TX-DATA1
A9	TUNN_RX_D2	TUNS_RX_D2	T27		TUN-VIPER-TX-DATA2
D8	TUNN_RX_D3	TUNS_RX_D3	R30		TUN-VIPER-TX-DATA3
B9	TUNN_RX_D4	TUNS_RX_D4	T28		TUN-VIPER-TX-DATA4
D7	TUNN_RX_D5	TUNS_RX_D5	T29		TUN-VIPER-TX-DATA5
C8	TUNN_RX_D6	TUNS_RX_D6	T30		TUN-VIPER-TX-DATA6
A8	TUNN_RX_D7	TUNS_RX_D7	U27		TUN-VIPER-TX-DATA7
D6	TUNN_RX_D8	TUNS_RX_D8	V27		TUN-VIPER-TX-DATA8
C6	TUNN_RX_D9	TUNS_RX_D9	V28		TUN-VIPER-TX-DATA9
B6	TUNN_RX_D10	TUNS_RX_D10	V29		TUN-VIPER-TX-DATA10
A6	TUNN_RX_D11	TUNS_RX_D11	V30		TUN-VIPER-TX-DATA11
D5	TUNN_RX_D12	TUNS_RX_D12	W26		TUN-VIPER-TX-DATA12
C5	TUNN_RX_D13	TUNS_RX_D13	W27		TUN-VIPER-TX-DATA13
A5	TUNN_RX_D14	TUNS_RX_D14	W28		TUN-VIPER-TX-DATA14
E4	TUNN_RX_D15	TUNS_RX_D15	W29		TUN-VIPER-TX-DATA15
D4	TUNN_RX_BUSY	TUNS_RX_BUSY	W30	3L15 33R	TUN-VIPER-TX-BUSY
B7	TUNN_RX_CLKN	TUNS_RX_CLKN	U30		TUN-VIPER-TX-CLKN
C7	TUNN_RX_CLKP	TUNS_RX_CLKP	U28		TUN-VIPER-TX-CLKP
A7	TUNN_REF	TUNS_REF	M28		VREF-PNX

9LA8, 9LA9 D2

+2V5

2L64 1n0

2L01 1n0

+2V5

IL03

2L06 1u0 RES

3L38 1K0

2L07 100n

3L20 47R

IL05 **1V3**

VREF-PNX

3L39 1K0

2L08 100n

2L01 E5
2L06 F2
2L07 F3
2L08 F3
2L64 E2
3L10 B4
3L11-1 C4
3L11-2 C5
3L11-3 C4
3L11-4 B5
3L12-1 B4
3L12-2 B5
3L12-3 B4
3L12-4 B5
3L13-1 B5
3L13-2 B4
3L13-3 B4
3L13-4 B5
3L14-1 B4
3L14-2 C5
3L14-3 C4
3L14-4 B5
3L15 D4
3L20 F3
3L38 F3
3L39 F3
7J00-1 A3
9LA8 D2
9LA9 D2
IL03 E3
IL05 F4

3104 313 6095.3

G_16290_032.eps
010206

SSB: PNX2015: DDR Interface

B4D PNX 2015: DDR Interface

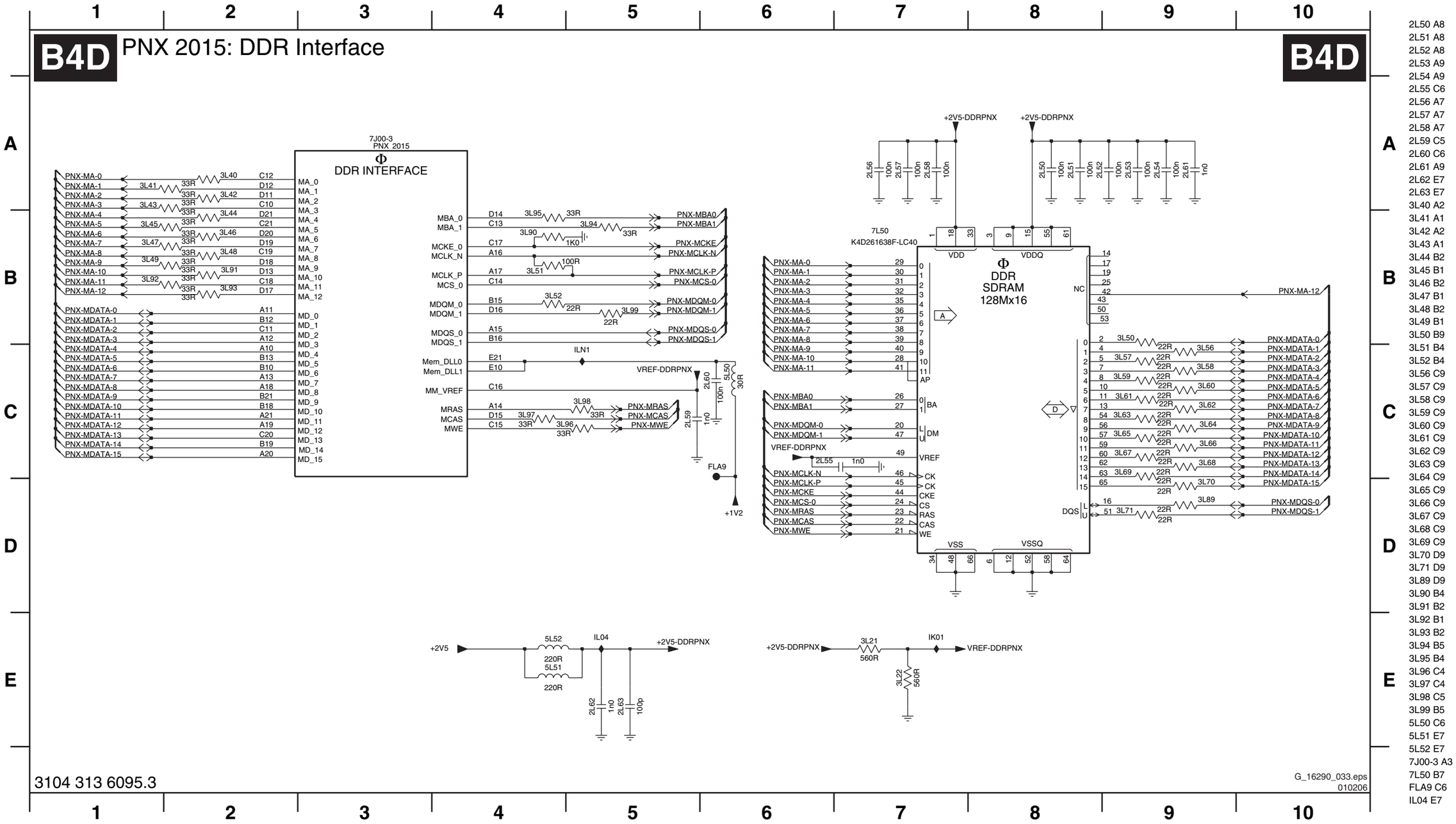

3104 313 6095.3

G_16290_033.eps
010206

2L50 A8
2L51 A8
2L52 A8
2L53 A9
2L54 A9
2L55 C6
2L56 A7
2L57 A7
2L58 A7
2L59 C5
2L60 C6
2L61 A9
2L62 E7
2L63 E7
3L40 A2
3L41 A1
3L42 A2
3L43 A1
3L44 B2
3L45 B1
3L46 B2
3L47 B1
3L48 B2
3L49 B1
3L50 B9
3L51 B4
3L52 B4
3L56 C9
3L57 C9
3L58 C9
3L59 C9
3L60 C9
3L61 C9
3L62 C9
3L63 C9
3L64 C9
3L65 C9
3L66 C9
3L67 C9
3L68 C9
3L69 C9
3L70 D9
3L71 D9
3L89 D9
3L90 B4
3L91 B2
3L92 B1
3L93 B2
3L94 B5
3L95 B4
3L96 C4
3L97 C4
3L98 C5
3L99 B5
5L50 C6
5L51 E7
5L52 E7
7J00-3 A3
7L50 B7
FLA9 C6
IL04 E7

SSB: PNX2015: Standby & Control

B4E PNX 2015: STANDBY & CONTROL

B4E

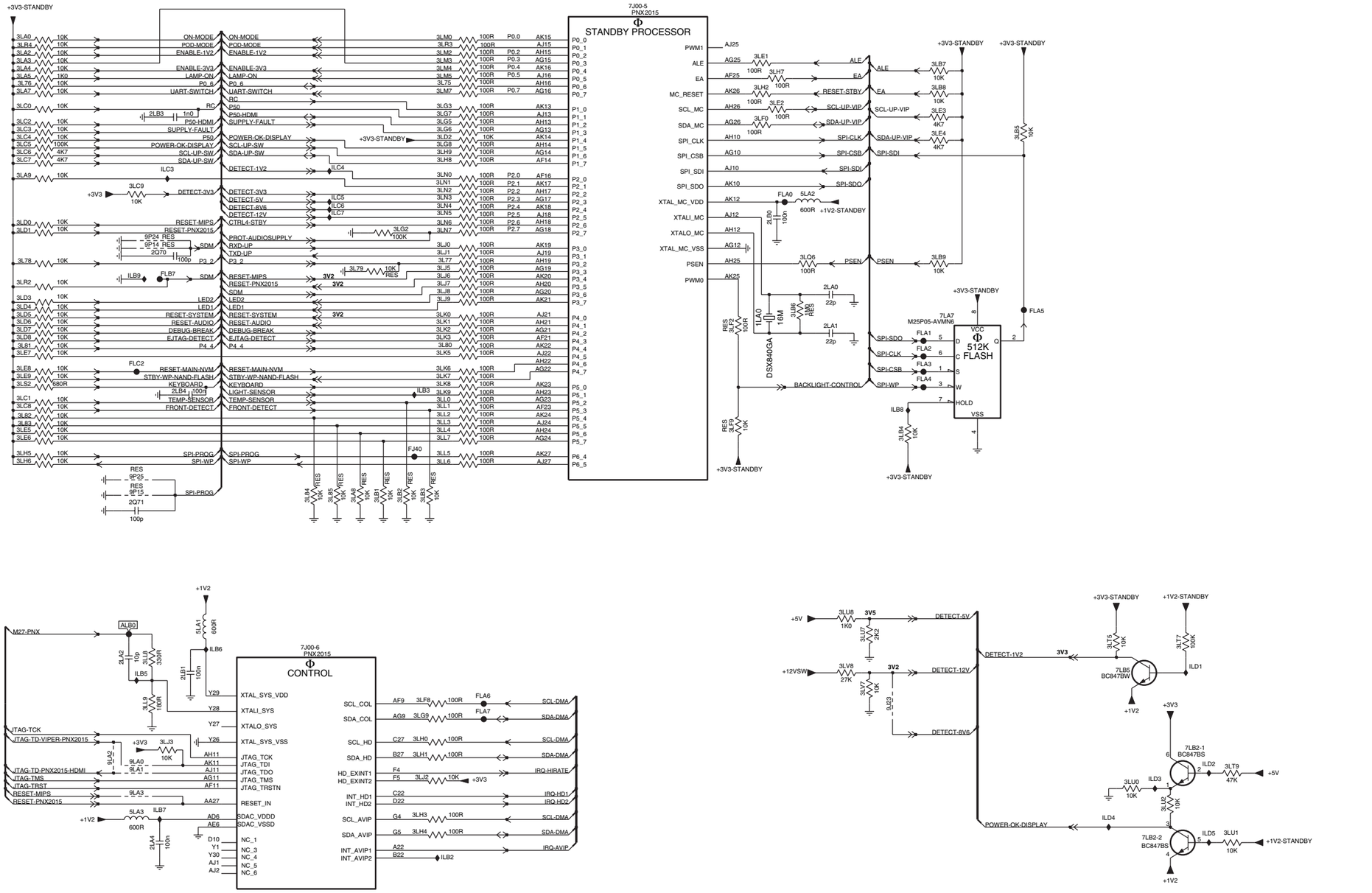

1LA0 D9	3LK5 D6
2LA0 D9	3LK6 D6
2LA1 D9	3LK7 D6
2LA2 G3	3LK8 D6
2LA4 I3	3LK9 E6
2LB0 C9	3LL0 E6
2LB1 G3	3LL1 E6
2LB3 B3	3LL2 E6
2LB4 D3	3LL3 E6
2Q70 C3	3LL4 E6
2Q71 F3	3LL5 E6
3L75 B6	3LL6 E6
3L76 B2	3LL7 E6
3L77 C6	3LL8 G3
3L78 C2	3LL9 G3
3L79 C5	3LM0 A6
3L80 D6	3LM2 A6
3L81 D2	3LM3 A6
3L82 E2	3LM4 B6
3L83 E2	3LM5 B6
3L84 E4	3LM7 B6
3L85 E5	3LN0 B6
3LA0 A2	3LN1 C6
3LA2 A2	3LN2 C6
3LA3 A2	3LN3 C6
3LA4 B2	3LN4 C6
3LA5 B2	3LN5 C6
3LA7 B2	3LN6 C6
3LA8 E5	3LN7 C6
3LA9 B6	3LQ6 C9
3LB7 A10	3LR2 C2
3LB8 B10	3LR3 A6
3LB9 C10	3LR4 A2
3LC0 B2	3LS2 D2
3LC1 E2	3LT5 G12
3LC2 B2	3LT7 G13
3LC3 B2	3LT9 H13
3LC4 B2	3LU0 H12
3LC5 B2	3LU1 I13
3LC6 B2	3LU2 H12
3LC7 B2	3LU7 G10
3LC8 E2	3LU8 G9
3LC9 C3	3LV7 G10
3LD0 C2	3LV8 G9
3LD1 C2	5LA1 G3
3LD2 B6	5LA2 C9
3LD3 D2	5LA3 H3
3LD4 D2	7J00-5 A8
3LD5 D2	7J00-6 G4
3LD6 D2	7LA7 D10
3LD7 D2	7LB2-1 H13
3LD8 D2	7LB2-2 I12
3LE1 A9	7LB5 G12
3LE2 B9	9J23 G10
3LE3 B10	9LA0 H3
3LE4 B10	9LA1 H3
3LE5 E2	9LA2 H3
3LE6 E2	9LA3 H3
3LE7 D2	9P14 C3
3LE8 D2	9P15 E3
3LE9 D2	9P24 C3
3LF0 B9	9P25 E3
3LF2 D8	ALB0 G3
3LF8 G6	FJ40 E5
3LG2 C5	FLA0 C9
3LG3 B6	FLA1 D10
3LG5 B6	FLA2 D10
3LG6 B6	FLA3 D10
3LG7 B6	FLA4 D10
3LG8 B6	FLA5 D11
3LG9 G5	FLA6 G6
3LH0 H5	FLA7 G6
3LH1 H5	FLB7 C3
3LH2 B9	FLC2 D3
3LH3 H5	ILB2 I6
3LH4 I5	ILB3 D6
3LH5 E2	ILB5 G3
3LH6 E2	ILB6 G4
3LH7 B9	ILB7 H3
3LH8 B6	ILB8 E10
3LH9 B6	ILB9 C3
3LJ0 C6	ILC3 B3
3LJ1 C6	ILC4 B5
3LJ2 H6	ILC5 C5
3LJ3 H3	ILC6 C5
3LJ5 C6	ILC7 C5
3LJ6 C6	ILD1 G13
3LJ7 C6	ILD2 H13
3LJ8 D6	ILD3 H12
3LJ9 D6	ILD4 H12
3LK0 D6	ILD5 I13
3LK1 D6	
3LK2 D6	
3LK3 D6	

G_16290_034.eps
010206

SSB: PNX2015: Supply

B4F PNX 2015: SUPPLY

B4F

7J00-9
PNX2015
Φ
GND

B2	VSS_1	VSS_36 R16
B5	VSS_2	VSS_37 R17
B8	VSS_3	VSS_38 R18
B11	VSS_4	
B14	VSS_5	VSS_40 T13
B17	VSS_6	VSS_41 T14
B20	VSS_7	VSS_42 T15
B29	VSS_8	VSS_43 T16
C25	VSS_9	VSS_44 T17
D24	VSS_10	VSS_45 T18
D26	VSS_11	VSS_46 J6
E2	VSS_12	VSS_47 U6
E23	VSS_13	VSS_48 U13
E26	VSS_14	VSS_49 U14
E29	VSS_15	VSS_50 U15
H29	VSS_16	VSS_51 U16
L29	VSS_17	VSS_52 U17
N13	VSS_18	VSS_53 U18
N14	VSS_19	VSS_54 U29
N15	VSS_20	VSS_55 V13
N16	VSS_21	VSS_56 V14
N17	VSS_22	VSS_57 V15
N18	VSS_23	VSS_58 V16
P13	VSS_24	VSS_59 V17
P14	VSS_25	VSS_60 V18
P15	VSS_26	VSS_61 AC29
P16	VSS_27	VSS_62 AF29
P17	VSS_28	VSS_63 AJ5
P18	VSS_29	VSS_64 AJ8
U26	VSS_30	VSS_65 AJ14
U25	VSS_31	VSS_66 AJ17
P29	VSS_32	VSS_67 AJ20
R13	VSS_33	VSS_68 AJ23
R14	VSS_34	VSS_69 AJ26
R15	VSS_35	VSS_70 AJ29

7J00-8
PNX2015
Φ
SUPPLY

+1V2

E9	C1V2_VDD_1
E11	C1V2_VDD_2
E12	C1V2_VDD_3
E16	C1V2_VDD_4
E17	C1V2_VDD_5
F9	C1V2_VDD_6
F10	C1V2_VDD_7
F12	C1V2_VDD_8
F16	C1V2_VDD_9
F17	C1V2_VDD_10
AA6	C1V2_VDD_11
J25	C1V2_VDD_12
K25	C1V2_VDD_13
AB6	C1V2_VDD_14
P6	C1V2_VDD_15
R6	C1V2_VDD_16
AB25	C1V2_VDD_17
F22	C1V2_VDD_18
F21	C1V2_VDD_19
AA5	C1V2_VDD_20
AE10	C1V2_VDD_21
AE12	C1V2_VDD_22
AF10	C1V2_VDD_23
AF12	C1V2_VDD_24
AF13	C1V2_VDD_25
E20	C1V2_VDD_26
E22	C1V2_VDD_27
AA25	C1V2_VDD_28

+3V3

P3V3VDD_1	F25
P3V3VDD_2	G25
P3V3VDD_3	H26
P3V3VDD_4	M6
P3V3VDD_5	N6
P3V3VDD_6	V6
P3V3VDD_7	W6
P3V3VDD_8	AF8
P3V3VDD_9	AA26
P3V3VDD_11	AB26
P3V3VDD_12	AC26
P3V3VDD_13	AD25
P3V3VDD_14	AE7
P3V3VDD_15	AE13
P3V3VDD_16	AE14
P3V3VDD_17	AE24
P3V3VDD_18	AE25
P3V3VDD_19	AF26

+1V2-STANDBY

SB1V2VDD_1	AE15
SB1V2VDD_2	AE16
SB1V2VDD_3	AE17
SB1V2VDD_4	AE18
SB1V2VDD_5	AF15
SB1V2VDD_6	AF17
SB1V2VDD_7	AF18

+3V3-STANDBY

SB3V3VDD_1	AE19
SB3V3VDD_2	AE21
SB3V3VDD_3	AE22
SB3V3VDD_4	AF19
SB3V3VDD_5	AF20

+2V5-DDRPNX
+2V5

E5	P2V5VDD_1
E6	P2V5VDD_2
E7	P2V5VDD_3
E8	P2V5VDD_4
E13	P2V5VDD_5
E14	P2V5VDD_6
E15	P2V5VDD_7
E18	P2V5VDD_8
E19	P2V5VDD_9
F6	P2V5VDD_10
F7	P2V5VDD_11
F13	P2V5VDD_12
F14	P2V5VDD_13
F15	P2V5VDD_14
F18	P2V5VDD_15
F19	P2V5VDD_16
L26	P2V5VDD_17
M25	P2V5VDD_18
M26	P2V5VDD_19
N25	P2V5VDD_20
R26	P2V5VDD_21
P25	P2V5VDD_22
T26	P2V5VDD_23
R25	P2V5VDD_24

VDD_LVDS_1	A23	
VDD_LVDS_2	A24	LVDS-3V3
VDD_LVDS_3	A26	
VDD_LVDS	B23	
VDDA_SYS_PLL	AE9	PLL-1V2
VCCA_LVDS_PLL	T25	LVDS-3V3
VDDA_1_7_MCAB	V25	+3V3
VCCA_U5PLL	P26	PLL-3V3
ADC_VSSA	AF24	
ADC3V3VDDA	AF22	UP-3V3
AVDD_MCAB	V26	+1V2
AVSS_MCAB	W25	
SDAC_3V3	AK1	ILN2 5LN4 600R

2L80 2u2 2L81 2u2 2L82 2u2 2L83 2u2 2L84 100n 2L85 100n 2L86 100n 2L87 100n 2L88 100p 2L89 1n0 2L90 1n0 2L91 1n0 2L92 1n0

+3V3: 2LN2 47u 4V, 2LN3 100n, 2LN4 100n, 2LN5 100n, 2LN6 100n, 2LN7 100n, 2LN8 100n

+1V2: 2LP0 100u 4V, 2LP2 100n, 2LP3 100n, 2LP4 100n

+2V5: 2LP7 100u 4V, 2LP8 100n, 2LP9 100n, 2LR0 100n

+3V3: 5LN0 ILN3 600R → PLL-3V3; 2LR2 100n

+1V2: 5LN1 ILN4 600R → PLL-1V2; 2LR4 100n

+3V3-STANDBY: 5LN2 ILN5 600R → UP-3V3; 2LR5 100n, 2LR6 100n

+3V3: 5LN3 ILN6 600R → LVDS-3V3; 2LR8 100n, 2LR9 100n

2L80 E1
2L81 E1
2L82 E1
2L83 E1
2L84 E1
2L85 E1
2L86 E2
2L87 E2
2L88 E2
2L89 E2
2L90 E2
2L91 E3
2L92 E3
2LN2 A7
2LN3 A7
2LN4 A7
2LN5 A8
2LN6 A8
2LN7 A8
2LN8 A8
2LP0 B7
2LP2 B8
2LP3 B8
2LP4 B8
2LP7 C8
2LP8 C8
2LP9 C8
2LR0 C8
2LR2 C8
2LR4 D8
2LR5 D8
2LR6 D8
2LR8 E8
2LR9 E8
2LS5 E6
5LN0 C7
5LN1 D7
5LN2 D7
5LN3 E7
5LN4 E6
7J00-8 A5
7J00-9 A2
ILN2 E6
ILN3 C8
ILN4 D8
ILN5 D8
ILN6 E8

3104 313 6095.3

G_16290_035.eps
010206

SSB: PNX2015: Display Interface

B4G VIPER/PNX 2015: DISPLAY INTERFACE

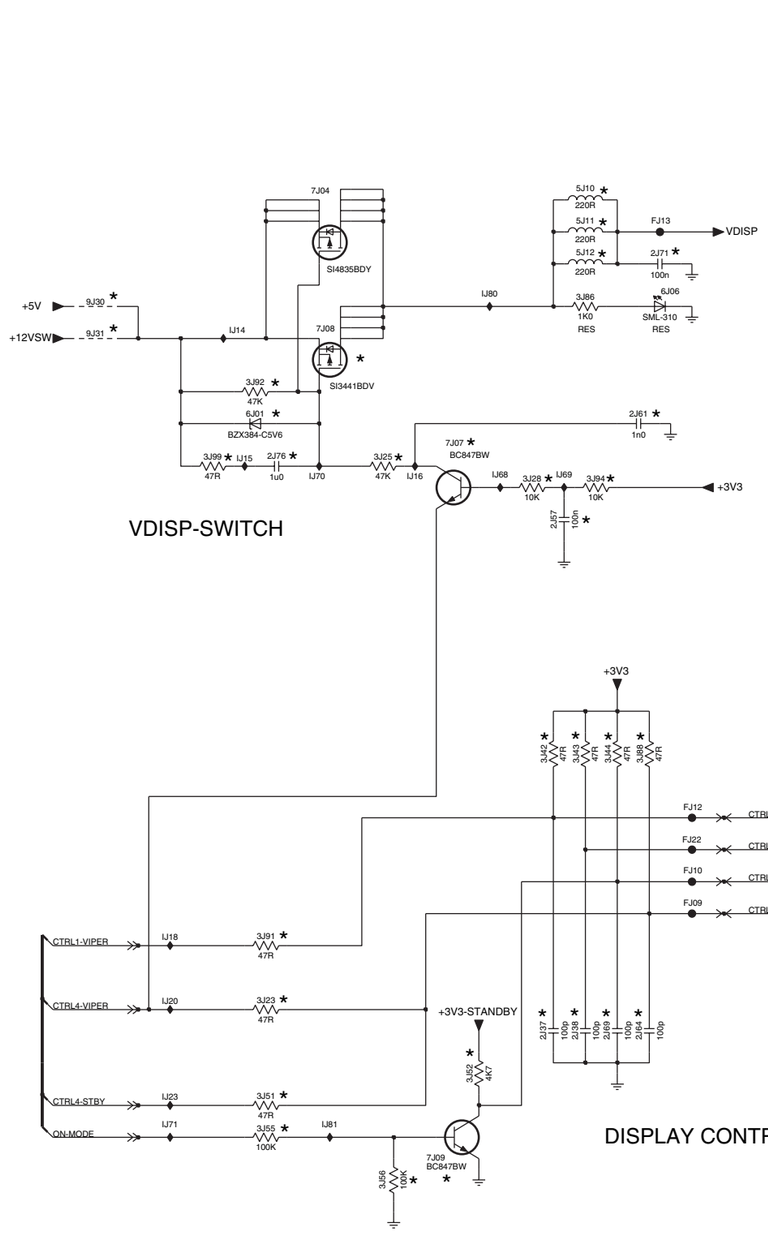

3104 313 6095.3

G_16290_036.eps
010206

1D50 C13	FJ12 F5	3J42 F4
1G50 F12	FJ13 B5	3J43 F4
1P06 F13	FJ22 F5	3J44 F5
2G35 D8	FJ23 G11	3J51 H2
2J21 B12	FJ24 G11	3J52 H4
2J22 B12	FJ25 G11	3J55 H2
2J23 C12	FJ26 G11	3J56 I3
2J24 C12	FJ27 H11	3J60 C12
2J25 D12	FJ28 H11	3J61 D12
2J26 D12	FJ29 H11	3J62 D12
2J27 E12	FJ30 H11	3J63 E12
2J30 I11	FJ31 H11	3J86 C4
2J31 I11	FJ32 H11	3J88 F5
2J37 H4	FJ36 H11	3J91 G2
2J38 H4	FJ37 H11	3J92 C2
2J40 F9	IJ14 C2	3J94 D4
2J41 F9	IJ15 D2	3J99 D2
2J42 F9	IJ16 D3	5J10 B4
2J43 G9	IJ18 G2	5J11 B4
2J44 G9	IJ20 G2	5J12 B4
2J45 G9	IJ23 H2	5J20 B12
2J46 H9	IJ30 A9	5J21 B12
2J47 H9	IJ31 B9	5J22 C12
2J48 H9	IJ32 B10	5J50 F9
2J49 I9	IJ68 D4	5J52 G9
2J57 D4	IJ69 D4	5J54 G9
2J61 D5	IJ70 D3	5J56 H9
2J64 H5	IJ71 H2	5J58 H9
2J69 H5	IJ72 D7	5J60 I9
2J71 B5	IJ73 C9	6J01 D2
2J72 I9	IJ74 C9	6J06 C5
2J73 I9	IJ75 C8	7J04 B3
2J76 D2	IJ76 C7	7J05-1 C7
2J77 C9	IJ80 C4	7J05-2 C7
3J15 B7	IJ81 H3	7J06 C9
3J16 C8	IJ82 C9	7J07 D4
3J17 C8		7J08 C3
3J18 C9		7J09 I3
3J19 C9		7J10 B10
3J20 D9		9J21 D7
3J21 D8		9J30 C1
3J22 D7		9J31 C1
3J23 G2		9J40 B9
3J25 D3		FJ01 B13
3J28 D4		FJ02 B13
3J30 H11		FJ03 C13
3J31 I11		FJ04 C13
3J40 A9		FJ05 D13
3J41 A9		FJ06 D13
3J42 F4		FJ07 E13
3J43 F4		FJ09 G5
3J44 F5		FJ10 G5

SSB: Viper: Control

0H00 B10	1H00 B2	2H06 G10	3H04 B13	3H11 D1	3H24 G7	3H54 F4	3H70 E8	3H75 B2	3H80-4 C8	3H84 E8	3H90 B1	3H99 B4	3Q12 B4	3Q17 I7	3Q22 G13	3Q48 B4	6H01 F1	9H02 F3	9H07 D1	AH10 A8	FQ02 H15	FQ21 C1	FQ50 D4	IQ03 H10	IQ22 G6	IQ28 G7
0H02 B11	1H20 B10	2H07 G10	3H05 B13	3H16 C3	3H25 G7	3H55 E4	3H71 D1	3H79 A8	3H81-1 D8	3H85 E1	3H94 I7	3Q03 B2	3Q13 B4	3Q18 I8	3Q23 H10	3Q52 D4	6H03 G1	9H03 C4	9H08 D1	AH11 B2	FQ03 E4	FQ22 C1	FQ52 F4	IQ04 H10	IQ23 G7	IQ30 F1
0H05 C10	1M00 A11	2H08 A1	3H06 A10	3H17 C3	3H31 F1	3H56 E4	3H72 E7	3H80-1 D8	3H81-2 C8	3H86 E8	3H95 I7	3Q04 B2	3Q14 B4	3Q19 F13	3Q24 F10	5H02 H11	6H07-1 G13	9H04 C1	9H13 D1	FH12 H7	FQ04 H14	FQ23 C1	FQ53 F4	IQ15 F10	IQ24 G7	
0H09 C10	1M60 H15	2H09 B1	3H08 C3	3H22 C13	3H40 E1	3H57 D4	3H73 B8	3H80-2 C8	3H81-3 D8	3H88 F8	3H97 G1	3Q10 B4	3Q15 B4	3Q20 H11	3Q27 B1	5H03 G13	6H07-2 G12	9H05 F4	9H15 F3	FQ00 H15	FQ10 G1	FQ40 B2	IH09 D1	IQ16 F10	IQ25 H7	
0H10 C10	1MM3 C11	2Q69 G14	3H10 D1	3H23 C13	3H41 F1	3H69 D3	3H74 B8	3H80-3 D8	3H82 B2	3H89 F10	3H98 C4	3Q11 B4	3Q16 H10	3Q21 H11	3Q29 F13	6H00 I7	7V00-5 A5	9H06 E3	9H16 C4	FQ01 H14	FQ19 C1	FQ41 B2	IH16 G6	IQ17 G13	IQ27 F7	

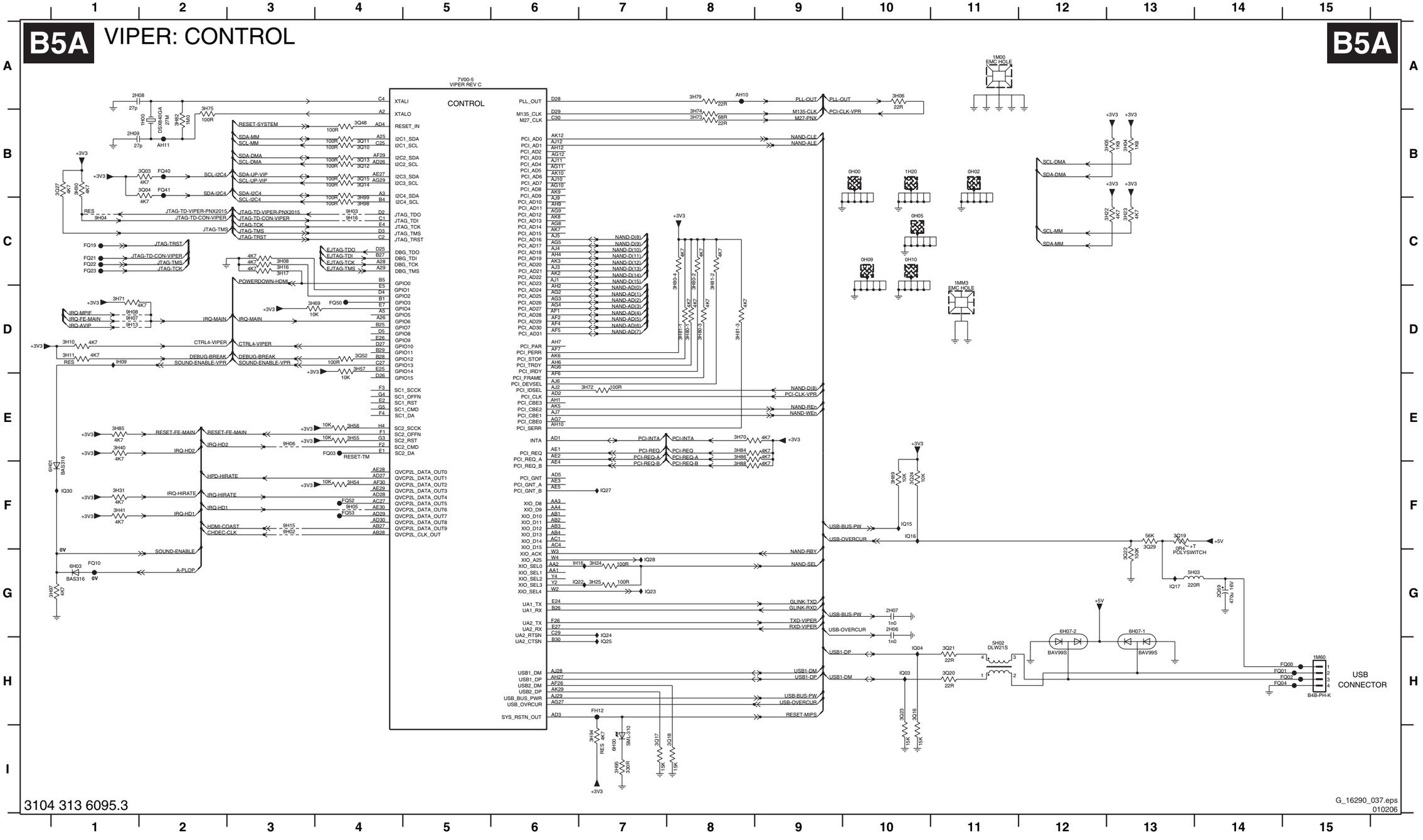

SSB: Viper: Main Memory

B5B VIPER: MAIN MEMORY

B5B

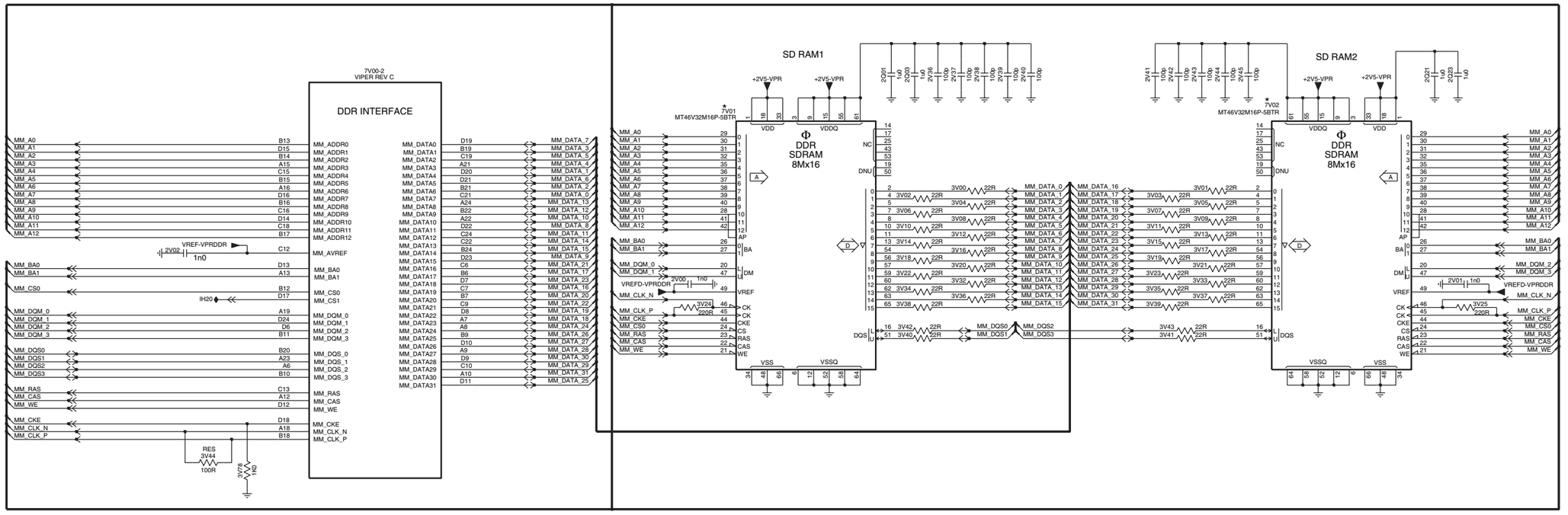

G_16290_038.eps
010206

2H00 H9
2H02 H8
2H03 H9
2H10 G8
2H11 G9
2H12 G9
2Q01 B9
2Q03 B9
2Q21 B14
2Q23 B14
2V00 D7
2V01 D14
2V02 C2
2V16 G11
2V17 G11
2V18 G11
2V19 G11
2V20 G12
2V21 G12
2V22 G12
2V23 G12
2V24 G12
2V25 G13
2V26 G13
2V27 G13
2V28 G13
2V29 G14
2V30 G14
2V31 G14
2V35 G14
2V36 B9
2V37 B10
2V38 B10
2V39 B10
2V40 B10
2V41 B11
2V42 B12
2V43 B12
2V44 B12
2V45 B12
3H50 G8
3H51 H8
3H52 F8
3H53 G8
3V00 C10
3V01 C12
3V02 C9
3V03 C11
3V04 C10
3V05 C12
3V06 C9
3V07 C11
3V08 C10
3V09 C12
3V10 C9
3V11 C11
3V12 C10
3V13 C12
3V14 C9
3V15 C11
3V16 C10
3V17 C12
3V18 C9
3V19 C11
3V20 C10
3V21 C12
3V22 D9
3V23 D11
3V24 D7
3V25 D14
3V32 D10
3V33 D12
3V34 D9
3V35 D11
3V36 D10
3V37 D12
3V38 D9
3V39 D11
3V40 D9
3V41 D11
3V42 D9
3V43 D11
3V44 E3
3V78 E3
7V00-2 B4
7V01 B7
7V02 B12
IH20 D3
IQ13 F9
IQ14 G9

SSB: Viper: A/V + Tunnelbus

B5C VIPER: A/V + TUNNELBUS

B5C

7V00-1
VIPER REV C

AUDIO/VIDEO

+3V3

3H28 4K7 DV1F-VALID
3H32 4K7 DV2A-VALID
3H18 4K7 DV3F-VALID

DV1F-DATA0 AG13 DV1_DATA0
DV1F-DATA1 AH13 DV1_DATA1
DV1F-DATA2 AJ13 DV1_DATA2
DV1F-DATA3 AK13 DV1_DATA3
DV1F-DATA4 AG14 DV1_DATA4
DV1F-DATA5 AJ14 DV1_DATA5
DV1F-DATA6 AG15 DV1_DATA6
DV1F-DATA7 AH15 DV1_DATA7
DV1F-DATA8_ERR AJ15 DV1_DATA8
DV1F-DATA9_SOP AK15 DV1_DATA9
DV1F-VALID AG16 DV1_VALID
DV1F-CLK AH16 DV1_CLK

AJ16 DV2_DATA0
AK16 DV2_DATA1
AJ17 DV2_DATA2
AG17 DV2_DATA3
AK18 DV2_DATA4
AJ18 DV2_DATA5
AH18 DV2_DATA6
AG19 DV2_DATA7
DV2A-VALID AK19 DV2_VALID
DV2A-CLK AH19 DV2_CLK
AJ19 DV2_ERR
AG18 DV2_SOP

DV3F-DATA2_0 AK24 DV3_DATA0
DV3F-DATA3_1 AJ24 DV3_DATA1
DV3F-DATA4_2 AK25 DV3_DATA2
DV3F-DATA5_3 AG23 DV3_DATA3
DV3F-DATA6_4 AH24 DV3_DATA4
DV3F-DATA7_5 AJ25 DV3_DATA5
DV3F-DATA8_6 AK26 DV3_DATA6
DV3F-DATA9_7 AG24 DV3_DATA7
DV3F-VALID AJ26 DV3_VALID
DV3F-CLK AG25 DV3_CLK
DV3F-DATA1_ERR AF24 DV3_ERR
DV3F-DATA0_SOP AH25 DV3_SOP

IH10 AG26 DV_FREF
IH11 AK28 DV_VREF
IH15 AJ27 DV_HREF

IH01 AA30 I2S_IN1_SD
AA29 I2S_IN1_WS
AA28 I2S_IN1_SCK
IH03 AB30 I2S_IN1_OSCLK

I2S-MAIN-ND W28 I2S_IN2_SD
W27 I2S_IN2_WS
Y29 I2S_IN2_SCK
IH00 Y27 I2S_IN2_OSCLK

SPDIF-HDMI AA27 SPDIF_IN2
AC30 SPDIF_IN1

QVCP5L_DATA_OUT0 J28 68R 3Q28-4 DV-BOUT-0
QVCP5L_DATA_OUT1 J27 68R 3Q28-3 DV-BOUT-1
QVCP5L_DATA_OUT2 H30 68R 3Q28-2 DV-BOUT-2
QVCP5L_DATA_OUT3 H27 68R 3Q28-1 DV-BOUT-3
QVCP5L_DATA_OUT4 G30 68R 3Q34-4 DV-BOUT-4
QVCP5L_DATA_OUT5 G29 68R 3Q34-3 DV-BOUT-5
QVCP5L_DATA_OUT6 G28 68R 3Q34-2 DV-BOUT-6
QVCP5L_DATA_OUT7 G27 68R 3Q34-1 DV-BOUT-7
QVCP5L_DATA_OUT8 F30 68R 3Q26-4 DV-BOUT-8
QVCP5L_DATA_OUT9 F29 68R 3Q26-3 DV-BOUT-9
QVCP5L_DATA_OUT10 M28 68R 3Q25-2 DV-GOUT-0
QVCP5L_DATA_OUT11 M27 68R 3Q25-1 DV-GOUT-1
QVCP5L_DATA_OUT12 L29 68R 3Q44-4 DV-GOUT-2
QVCP5L_DATA_OUT13 L27 68R 3Q44-3 DV-GOUT-3
QVCP5L_DATA_OUT14 K30 68R 3Q44-2 DV-GOUT-4
QVCP5L_DATA_OUT15 K29 68R 3Q44-1 DV-GOUT-5
QVCP5L_DATA_OUT16 K28 68R 3Q08-4 DV-GOUT-6
QVCP5L_DATA_OUT17 K27 68R 3Q08-3 DV-GOUT-7
QVCP5L_DATA_OUT18 J30 68R 3Q08-2 DV-GOUT-8
QVCP5L_DATA_OUT19 J29 68R 3Q08-1 DV-GOUT-9
QVCP5L_DATA_OUT20 R28 68R 3Q07-4 DV-ROUT-0
QVCP5L_DATA_OUT21 R27 68R 3Q07-3 DV-ROUT-1
QVCP5L_DATA_OUT22 P29 68R 3Q07-2 DV-ROUT-2
QVCP5L_DATA_OUT23 P27 68R 3Q07-1 DV-ROUT-3
QVCP5L_DATA_OUT24 N30 68R 3Q05-4 DV-ROUT-4
QVCP5L_DATA_OUT25 N29 68R 3Q05-3 DV-ROUT-5
QVCP5L_DATA_OUT26 N28 68R 3Q05-2 DV-ROUT-6
QVCP5L_DATA_OUT27 N27 68R 3Q05-1 DV-ROUT-7
QVCP5L_DATA_OUT28 M30 68R 3Q25-4 DV-ROUT-8
QVCP5L_DATA_OUT29 M29 68R 3Q25-3 DV-ROUT-9
QVCP5L_CLK_OUT E30 68R 3H02 DV-CLKIN
QVCP5L_VSYNC F28 68R 3Q02-3 DV-OUT-VS
QVCP5L_HSYNC F27 68R 3Q02-4 DV-OUT-HS
QVCP5L_AUX1 G26 68R 3Q02-1 DV-OUT-FFIELD
QVCP5L_AUX2 E29 68R 3Q02-2 DV-OUT-DE

DAC_IRSET AH30 IH08 3H19 1K0
DAC_RDUMPY AF27 IH07 3H21 39R
DAC_RDUMPC AH29 IH06 3H20 39R
DAC_CVBS AG28
DAC_CHROMA AJ30

TS_DATA0 AJ22
TS_DATA1 AG21
TS_DATA2 AK22
TS_DATA3 AH21
TS_DATA4 AJ21
TS_DATA5 AK21
TS_DATA6 AG20
TS_DATA7 AJ20
TS_VALID AK23
TS_SOP AH22
TS_CLK AG22 3Q05 33R CHDEC-CLK

I2S_OUT1_SD0 U27 I2S-SUB-D
I2S_OUT1_SD1 V30 3H07 22R BACKLIGHT-CONTROL
I2S_OUT1_SD2 V29 CTRL1-VIPER
I2S_OUT1_SD3 V28
I2S_OUT1_WS V27
I2S_OUT1_SCK W30
I2S_OUT1_OSCLK W29 IH04

I2S_OUT2_SD0 T28 I2S-MCH-LR
I2S_OUT2_SD1 T27 I2S-MCH-CSW
I2S_OUT2_SD2 R30 I2S-MCH-SLR
I2S_OUT2_SD3 R29 I2S-MAIN-D
I2S_OUT2_WS T29 I2S-WS-MAIN
I2S_OUT2_SCK T30 I2S-BCLK-MAIN
I2S_OUT2_OSCLK U29 IH05

SPDIF_OUT AB29 SPDIF-OUT1

7V00-4
VIPER REV C

TUNNELBUS

TUN-VIPER-TX-DATA0 3Q36-4 33R N2 TUN_TX_DATA0
TUN-VIPER-TX-DATA1 3Q36-3 33R N1 TUN_TX_DATA1
TUN-VIPER-TX-DATA2 3Q36-2 33R P4 TUN_TX_DATA2
TUN-VIPER-TX-DATA3 3Q36-1 33R P2 TUN_TX_DATA3
TUN-VIPER-TX-DATA4 3Q35-4 33R R1 TUN_TX_DATA4
TUN-VIPER-TX-DATA5 3Q35-3 33R R2 TUN_TX_DATA5
TUN-VIPER-TX-DATA6 3Q35-2 33R R3 TUN_TX_DATA6
TUN-VIPER-TX-DATA7 3Q35-1 33R R4 TUN_TX_DATA7
TUN-VIPER-TX-DATA8 3Q37-4 33R T3 TUN_TX_DATA8
TUN-VIPER-TX-DATA9 3Q37-3 33R T4 TUN_TX_DATA9
TUN-VIPER-TX-DATA10 3Q37-2 33R U2 TUN_TX_DATA10
TUN-VIPER-TX-DATA11 3Q38-4 33R U4 TUN_TX_DATA11
TUN-VIPER-TX-DATA12 3Q37-1 33R V1 TUN_TX_DATA12
TUN-VIPER-TX-DATA13 3Q38-3 33R V2 TUN_TX_DATA13
TUN-VIPER-TX-DATA14 3Q38-2 33R V3 TUN_TX_DATA14
TUN-VIPER-TX-DATA15 3Q38-1 33R V4 TUN_TX_DATA15

TUN-VIPER-TX-CLKP 3Q39 33R T1 TUN_TX_CLOCKP
TUN-VIPER-TX-CLKN 3Q40 33R T2 TUN_TX_CLOCKN
TUN-VIPER-TX-BUSY W1 TUN_TX_BUSY

VREF-PNX K2 TUN_AVREF
2H01 1n0

TUN_RX_DATA0 G2 TUN-VIPER-RX-DATA0
TUN_RX_DATA1 G1 TUN-VIPER-RX-DATA1
TUN_RX_DATA2 J4 TUN-VIPER-RX-DATA2
TUN_RX_DATA3 J3 TUN-VIPER-RX-DATA3
TUN_RX_DATA4 H1 TUN-VIPER-RX-DATA4
TUN_RX_DATA5 K4 TUN-VIPER-RX-DATA5
TUN_RX_DATA6 J2 TUN-VIPER-RX-DATA6
TUN_RX_DATA7 J1 TUN-VIPER-RX-DATA7
TUN_RX_DATA8 K1 TUN-VIPER-RX-DATA8
TUN_RX_DATA9 L4 TUN-VIPER-RX-DATA9
TUN_RX_DATA10 L2 TUN-VIPER-RX-DATA10
TUN_RX_DATA11 M4 TUN-VIPER-RX-DATA11
TUN_RX_DATA12 M3 TUN-VIPER-RX-DATA12
TUN_RX_DATA13 M2 TUN-VIPER-RX-DATA13
TUN_RX_DATA14 M1 TUN-VIPER-RX-DATA14
TUN_RX_DATA15 N4 TUN-VIPER-RX-DATA15

TUN_RX_CLOCKP K3 TUN-VIPER-RX-CLKP
TUN_RX_BUSY N3 3Q41 33R TUN-VIPER-RX-BUSY

2H01 I6
3H02 C9
3H07 E8
3H18 C3
3H19 C9
3H20 D9
3H21 C9
3H28 A3
3H32 B3
3Q02-1 C9
3Q02-2 C9
3Q02-3 C9
3Q02-4 C8
3Q05-1 C9
3Q05-2 C8
3Q05-3 C9
3Q05-4 B9
3Q07-1 B8
3Q07-2 B9
3Q07-3 B9
3Q07-4 B8
3Q08-1 B9
3Q08-2 B9
3Q08-3 B8
3Q08-4 B9
3Q09 E8
3Q25-1 B8
3Q25-2 A9
3Q25-3 C8
3Q25-4 C9
3Q26-3 A9
3Q26-4 A8
3Q28-1 A9
3Q28-2 A8
3Q28-3 A9
3Q28-4 A9
3Q34-1 A9
3Q34-2 A9
3Q34-3 A8
3Q34-4 A9
3Q35-1 H6
3Q35-2 H5
3Q35-3 H6
3Q35-4 H6
3Q36-1 H5
3Q36-2 H6
3Q36-3 H6
3Q36-4 H5
3Q37-1 H5
3Q37-2 H6
3Q37-3 H5
3Q37-4 H6
3Q38-1 I5
3Q38-2 I6
3Q38-3 H6
3Q38-4 H6
3Q39 I6
3Q40 I6
3Q41 I9
3Q44-1 B9
3Q44-2 B8
3Q44-3 B9
3Q44-4 B9
7V00-1 A6
7V00-4 G7
IH00 D4
IH01 D4
IH03 D4
IH04 E8
IH05 F8
IH06 D9
IH07 C9
IH08 C9
IH10 D4
IH11 D4
IH15 D4

G_16290_039.eps
010206

SSB: Viper: Supply

SSB: Viper: EEPROM

B5E VIPER: EEPROM

B5E

MAIN NVM

+3V3-STANDBY
9P42 RES
IP10
FP36
3P37 100K
RESET-MAIN-NVM
PDTA114EU 7P18
2P34 100n
7P14 M24C64
(8Kx8) EEPROM
WC
SCL
SDA
ADR
9P16 RES
FP22
FP34
FP35
SCL-UP-VIP
SDA-UP-VIP
9P17

+5V2-STBY
2P35 100n
RXD
3P83 100R
FP23
3P84 100R
7P15-1 74HC4066PW
RXD-UP
7P15-2 74HC4066PW
UART-SWITCHn
3P85 100R
RXD-VIPER
TXD
3P86 100R
7P15-3 74HC4066PW
TXD-UP
3P88 10K
FP32
7P15-4 74HC4066PW
UART-SWITCH
FP33
7P16 PDTC114EU
TXD-VIPER
10K 3P57
7P17 PDTC114EU

+3V3
3P80 10K
NAND-SEL
3P81 2K2
NAND-RBY
2P80 100n
2P81 100n
7P80 TC58DVM92F1TGI0
EEPROM (32Mx16)
VCC VCCQ
NAND-AD(0)
NAND-AD(1)
NAND-AD(2)
NAND-AD(3)
NAND-AD(4)
NAND-AD(5)
NAND-AD(6)
NAND-AD(7)
NAND-D(8)
NAND-D(9)
NAND-D(10)
NAND-D(11)
NAND-D(12)
NAND-D(13)
NAND-D(14)
NAND-D(15)
RE
CE
CLE
ALE
WE
WP
RY BY
I/O
NC
GND
VSS
IP11
IP16
3P82 10K
NAND-REn
NAND-SEL
NAND-CLE
NAND-ALE
NAND-WEn
STBY-WP-NAND-FLASH
NAND-RBY

2P35 C3
2P80 C7
2P81 C8
3P37 A4
3P57 F3
3P80 B8
3P81 C8
3P82 F7
3P83 D2
3P84 D2
3P85 D2
3P86 E2
3P88 E2
7P14 B3
7P15-1 D2
7P15-2 D3
7P15-3 E2
7P15-4 E2
7P16 F1
7P17 F2
7P18 A3
7P80 C8
9P16 B4
9P17 C4
9P42 A3
FP22 B4
FP23 D1
FP32 E2
FP33 F1
FP34 B4
FP35 B4
FP36 A3
IP10 A3
IP11 E7
IP16 D8

3104 313 6095.3

G_16290_041.eps
010206

SSB: Miscellaneous

B5F MISCELLANEOUS

B5F

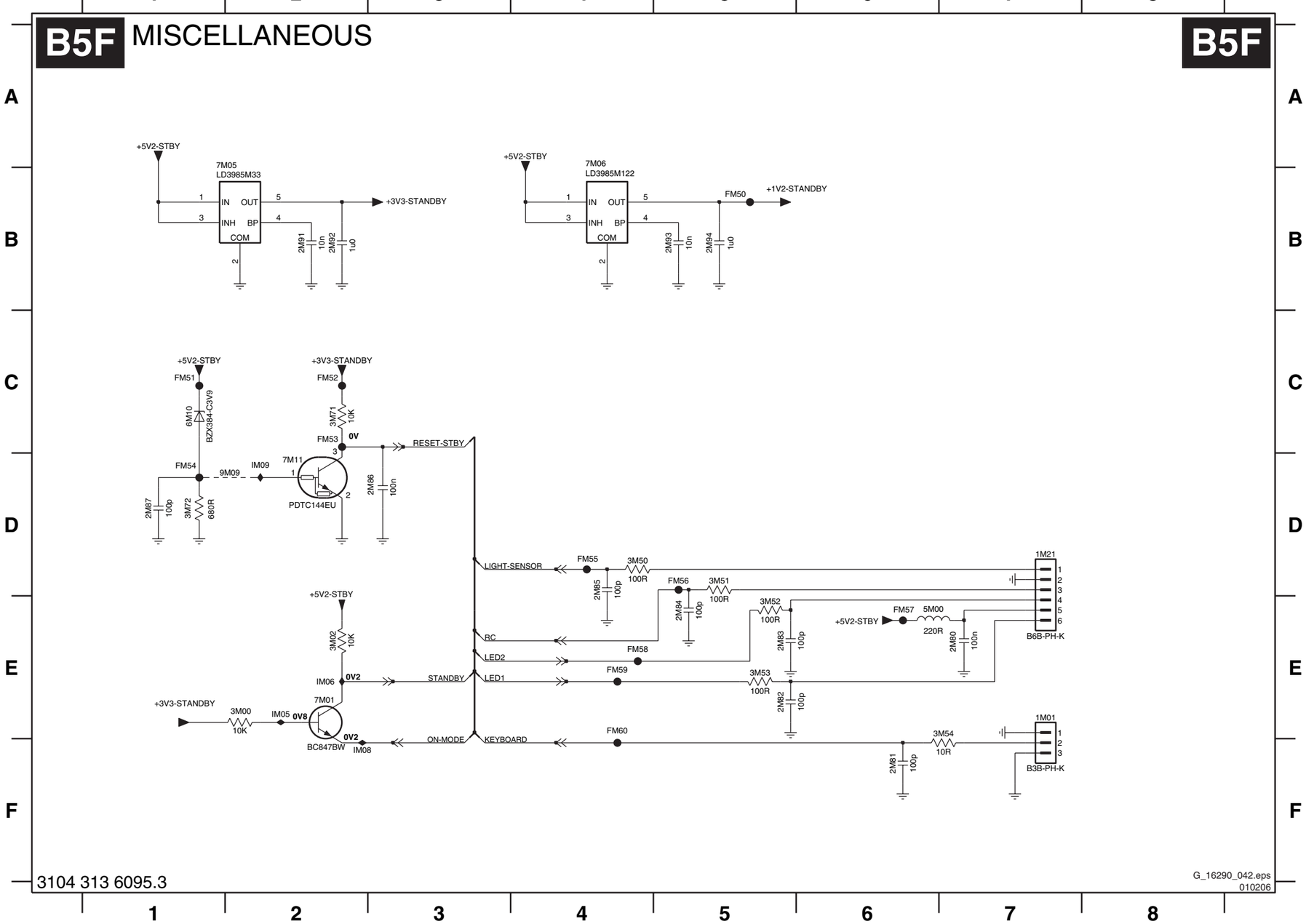

1M01 E7
1M21 D7
2M80 E7
2M81 F6
2M82 E5
2M83 E5
2M84 E5
2M85 D4
2M86 D3
2M87 D1
2M91 B2
2M92 B2
2M93 B5
2M94 B5
3M00 E2
3M02 E2
3M50 D4
3M51 D5
3M52 E5
3M53 E5
3M54 E7
3M71 C2
3M72 D1
5M00 E6
6M10 C1
7M01 E2
7M05 A1
7M06 A4
7M11 D2
9M09 D2
FM50 B5
FM51 C1
FM52 C2
FM53 C2
FM54 D1
FM55 D4
FM56 D5
FM57 E6
FM58 E4
FM59 E4
FM60 E4
IM05 E2
IM06 E2
IM08 F2
IM09 D2

G_16290_042.eps
010206

SSB: Video DAC

B6 VIDEO-DAC

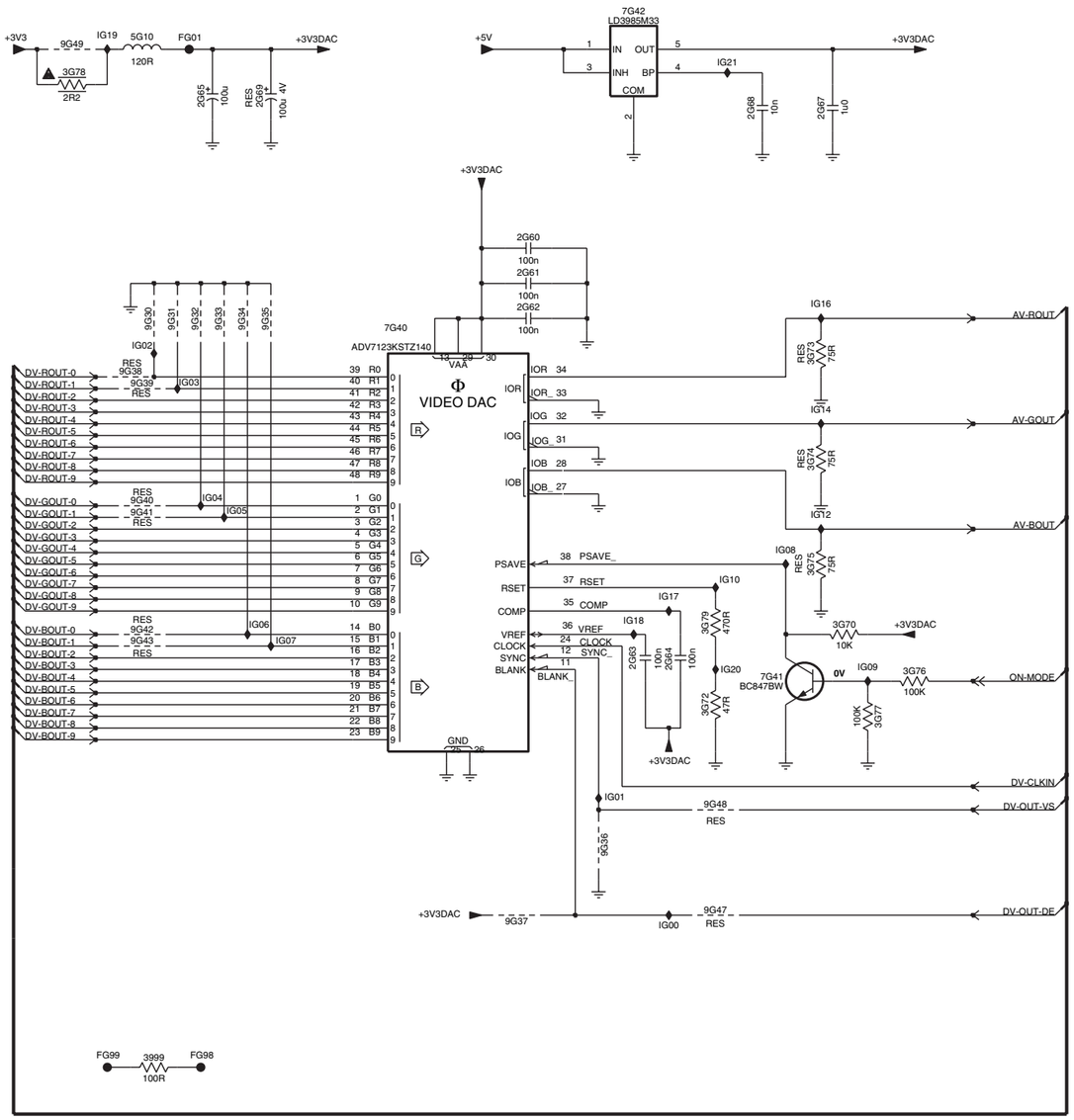

2G60 C5
2G61 C5
2G62 C5
2G63 E6
2G64 E6
2G65 B3
2G67 B7
2G68 B6
2G69 B3
3999 H3
3G70 E7
3G72 F6
3G73 D7
3G74 D7
3G75 E7
3G76 E7
3G77 F7
3G78 B2
3G79 E6
5G10 B3
7G40 C4
7G41 F6
7G42 A6
9G30 C3
9G31 C3
9G32 C3
9G33 C3
9G34 C3
9G35 C3
9G36 G5
9G37 G5
9G38 D2
9G39 D3
9G40 D3
9G41 D3
9G42 E3
9G43 E3
9G47 G6
9G48 F6
9G49 B2
FG01 B3
FG98 H3
FG99 H2
IG00 G6
IG01 F5
IG02 C3
IG03 D3
IG04 D3
IG05 D3
IG06 E3
IG07 E3
IG08 E6
IG09 E7
IG10 E6
IG12 D7
IG14 D7
IG16 C7
IG17 E6
IG18 E6
IG19 B2
IG20 E6
IG21 B6
cG10 D10
cG11 D10
cG12 D10
cG13 D10
cG14 D10
cG15 D10
cG16 D10
cG17 D10
cG18 D10
cG19 D10
cG20 D10
cG21 E10
cG22 E10
cG23 E10
cG24 E10
cG25 E10
cG26 E10
cG27 E10
cG28 E10
cG29 E10
cG30 E10
cG31 E10
cG32 F10
cG33 F10
cG34 F10
cG35 F10
cG36 F10
cG37 F10
cG38 F10
cG39 F10
cG40 F10
cG41 F10
cG42 F10
cG43 G10
cG44 G10

G_16290_043.eps
010206

SSB: HDMI: Supply

B7A HDMI + SUPPLY

B7A

HDMI CONNECTOR 1

DDC NVM HDMI 1

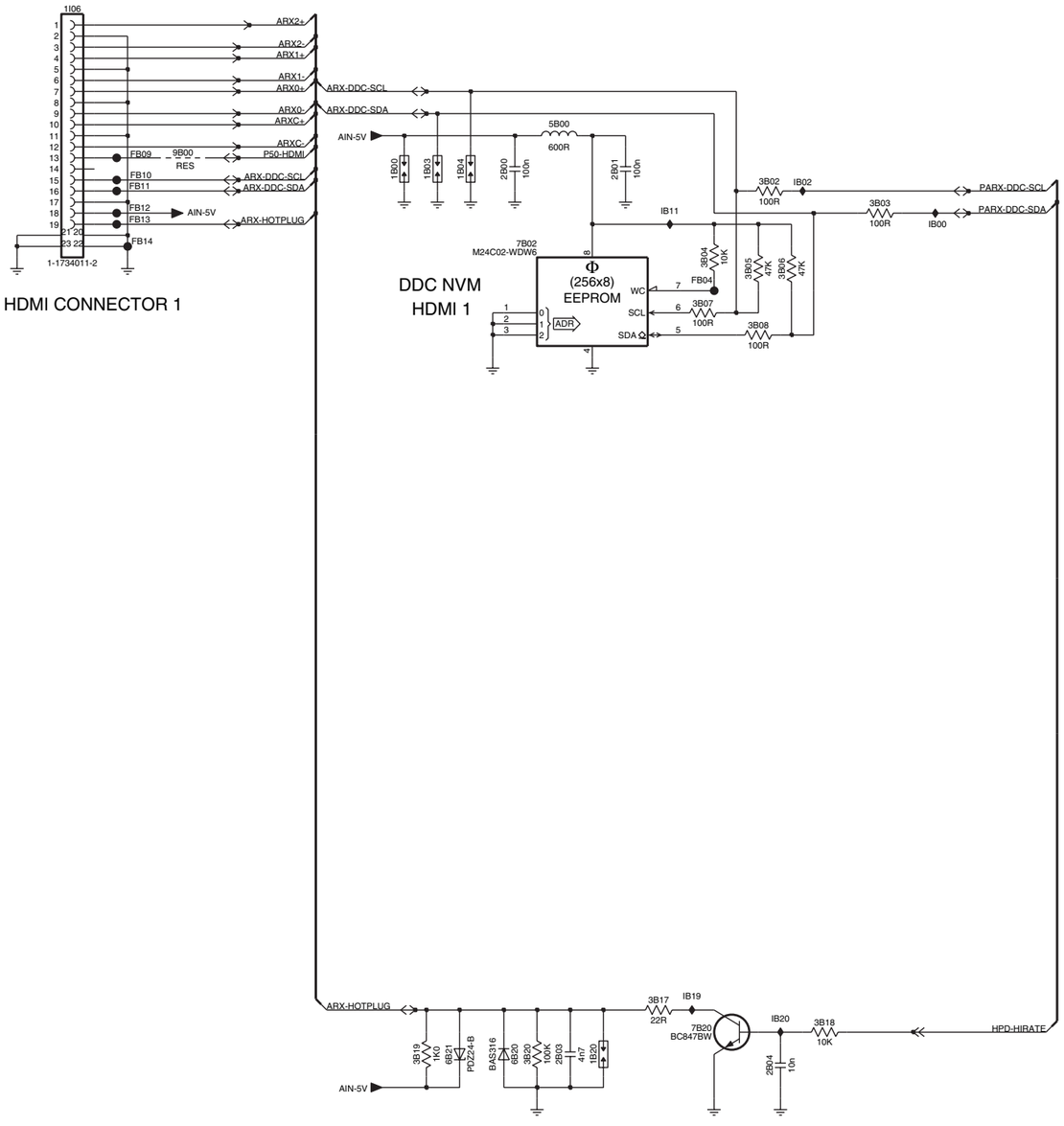

1B00 C3
1B03 C4
1B04 C4
1B20 I5
1I06 B1
2B00 C4
2B01 C5
2B03 I4
2B04 I6
2B10 B10
2B11 C9
2B12 C11
2B13 C11
2B14 C12
2B15 C12
2B16 C12
2B17 C12
2B18 E13
2B19 E13
2B20 E13
2B21 E13
2B22 E11
2B23 E11
2B24 E12
2B25 E12
2B26 D10
2B31 G9
2B32 G10
2B33 G11
2B35 F12
2B36 F12
2B37 F12
2B38 F13
2B39 F13
2B40 I10
2B41 I10
2B45 I9
2B46 G10
3B02 C6
3B03 C7
3B04 D5
3B05 D6
3B06 D6
3B07 D5
3B08 D6
3B17 H5
3B18 I6
3B19 I4
3B20 I4
5B00 C5
5B10 C9
5B11 D9
5B12 D9
5B17 B9
5B18 F10
6B20 I4
6B21 I4
7B02 D4
7B20 I5
7B25 F9
7B45 H10
9B00 C2
9B38 H10
FB04 D5
FB09 C2
FB10 C2
FB11 C2
FB12 C2
FB13 C2
FB14 D2
FB16 C10
FB17 B10
FB18 D10
FB19 D10
FB20 F10
FB21 F11
FB45 H10
IB00 C7
IB02 C6
IB11 C5
IB19 H5
IB20 I6

G_16290_044.eps
010206

SSB: HDMI: I/O + Control

B7B HDMI: I/O + CONTROL

B7B

7B50-1
TDA9975HS/8/C1
VIDEO CONVERTER INTERFACE

7B50-3
TDA9975HS/8/C1
GND

7B50-2
TDA9975HS/8/C1
VDD

HDMI-COAST
M135-CLK
POWERDOWN-HDMI
JTAG-TD-PNX2015-HDMI
JTAG-TD-HDMI-CON
JTAG-TMS
JTAG-TRST
JTAG-TCK
SCL-MM
SDA-MM
PR
PR1
Y
Y1
PB
PB1
H-SYNC-VGA
V-SYNC-VGA
ARX0-
ARX0+
ARX1-
ARX1+
ARX2-
ARX2+
ARXC-
ARXC+
PARX-DDC-SDA
PARX-DDC-SCL
DV-VREF
DV4-VALID
HPD-HIRATE
DV4-CLK
IRQ-HIRATE
DV-HREF
DV-FREF
SPDIF-HDMI
1V8-PLL
+1V8
3V3-APLL
3V3-DIG
3V3-AVI
3V3-PLL

G_16290_045.eps
010206

2B50 D1 IB63 G8
2B51 D1 IB64 G8
2B52 D1 IB67 C3
2B55 C3 IB68 D3
2B56 D2 IB69 E3
2B57 D3 IB70 E3
2B58 D6 IB73 F3
2B59 D2 IB75 F3
2B60 D3 IB81 G6
2B61 E3 IB82 G6
2B62 E2 IB83 C8
2B63 E3 IB84 G8
2B64 D6 IB85 C9
2B65 E2 IB86 G4
2B66 F3
2B67 F3
2B68 F2
2B69 F3
2B70 D6
2B71 G2
2B72 G3
2B75 D3
2B76 E3
2B77 F3
2B78 D5
2B79 D5
2B80 E5
3B50 C5
3B51 G4
3B52 G5
3B53 G5
3B54 G9
3B55 C8
3B56-1 C8
3B56-2 C9
3B56-3 C8
3B56-4 C9
3B57-1 D8
3B57-2 D9
3B57-3 D8
3B57-4 D9
3B58-1 D8
3B58-2 E8
3B58-3 E8
3B58-4 E8
3B59-1 C8
3B59-2 C9
3B59-3 C8
3B59-4 D9
3B60 H4
3B61 H5
3B62-1 D8
3B62-2 D9
3B62-3 D8
3B62-4 D9
3B65 C2
3B66 D3
3B67 D2
3B68 D3
3B69 E2
3B70 E3
3B71 E2
3B72 E3
3B73 F2
3B74 F3
3B75 F2
3B76 G3
3B80 G6
3B81 G5
3B82 G6
3B83 E8
3B84 F8
3B85 G8
3B86 G9
3B87 G8
3B88 G8
3B89 G4
5B65 C3
5B67 D3
5B69 E3
5B71 E3
5B73 F3
5B75 F3
7B50-1 B7
7B50-2 G11
7B50-3 B11
9B50 C5
9B51 G4
9B52 G5
9B53 G5
9B54 G9
FB80 G4
FB83 F8
FB84 F8
IB53 C6
IB57 B6
IB58 E6
IB59 F8
IB60 F8
IB61 F8
IB62 G8

SSB: Analog I/O

B7C ANALOG I/O

B7C

1 2 3 4 5 6 7 8 9 10 11 12 13 14

A B C D E F G H I

+12VSW
PDZ24-B
100R
75R
100p
100K
12p
120R
220R
100n
SVHS
YLC21-3020N
YKC21-4374
YKF51-5564
GREEN
YELLOW
BLUE
RED
WHITE
BLACK
Y / CVBS
Y
Y1
PB
PB1
PR
PR1
AV1_CVBS
AV7_Y-CVBS
AUDIO-IN1-R
AUDIO-IN4-R
AUDIO-IN1-L
AUDIO-IN4-L
V_NOM
AV2_C
AV2_Y-CVBS
SPDIF-OUT1
AUDIO-IN2-R
AUDIO-IN2-L
AV2
AV1
AV3

3104 313 6095.3

G_16290_046.eps
010206

1I00 G9 II01 B5
1I01 C9 II02 D5
1I02 E9 II03 G5
1I03-1 C1 II05 G6
1I03-2 E1 II06 E6
1I03-3 G1 II07 E4
1I04-1 B8 II08 F12
1I04-2 E8 II0C B4
1I04-3 G8 II0D D4
1I07 G7 II10 G4
1I08 F7 II11 G4
1I09 G7 II12 C4
1I0A C7 II13 F12
1I0B E7 II14 F13
1I0E F2 II15 G13
1I0F G2 II16 H13
1I0G F10 II17 C5
1I0H D2
1I0I G2
1I0J C2
1I0K E2
1I0L C10
1I0M E10
1I0N H10
1I0P G10
1I17 D7
2I05 G6
2I06 F6
2I07 F3
2I08 G4
2I09 F11
2I0E H12
2I0F G12
2I53 F12
3I00 G6
3I01 C6
3I02 E6
3I03 G6
3I04 D6
3I06 C6
3I07 G6
3I08 E6
3I09 G6
3I0A F6
3I0B E3
3I0C F3
3I0D G3
3I0E G3
3I0F D3
3I0G D3
3I0H G3
3I0I G3
3I0J E3
3I0K D3
3I0L C3
3I0M C3
3I0N C11
3I0P E11
3I0Q G12
3I12 D6
3I13 D6
3I60 H12
3I66 G12
3I67 H12
3I68 F12
3I69 F12
5I02 F11
6I00 G7
6I02 E7
6I08 F7
6I09 B7
6I0A D7
6I0D E2
6I0F G2
6I0H F10
6I0J C2
6I0L F2
6I0N B2
6I0P D2
6I0T B11
6I0V D11
6I0Y G11
6I10 G11
6I11 C7
FI00 G7
FI01 F7
FI03 G7
FI04 C7
FI05 D7
FI0C E2
FI0D G2
FI0E F10
FI0F D2
FI0G G2
FI0H D2
FI0I C2
FI0J C9
FI0K C10
FI0M H10
FI0N G10
FI0P D9
FI12 D7

SSB: UART

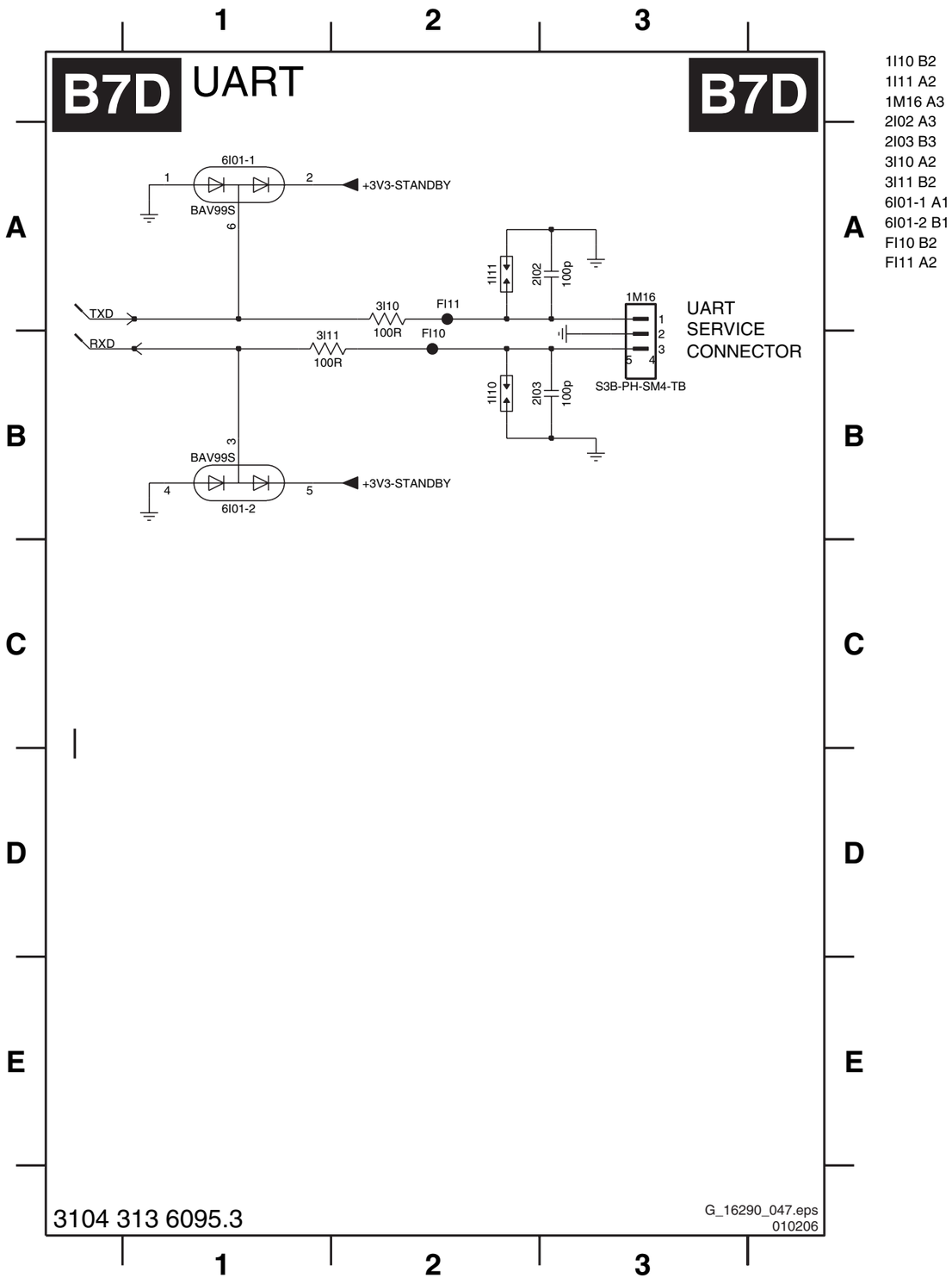

1I10 B2
1I11 A2
1M16 A3
2I02 A3
2I03 B3
3I10 A2
3I11 B2
6I01-1 A1
6I01-2 B1
FI10 B2
FI11 A2

Personal Notes:

E_06532_012.eps
131004

SSB: Audio: Amplifier

1DM1 H8	2D22 H14	2D36 G9	2D45 H3	2D54 F14	2D63 C6	3D13 B2	3D22 C5	3D39-1 G4	3D43 E1	3D56 G2	3D69 H10	3D78 E12	3D88 C10	5D15 G15	7D10-4 B3	7D17 G4	7D23-2 G12	9D03-2 F6	FD27 G10	ID15 F12	ID28 G4	ID37 G11	ID46 H3	ID57 C3	ID70 B8	ID81 F1	cD04 D15
2D11 B2	2D23 E14	2D37 G6	2D46 H10	2D55 F2	2D64 E9	3D14 B2	3D23 D4	3D39-2 E4	3D44 F5	3D57 G9	3D70 H11	3D79 G12	3D89 B4	5D16 G2	7D11-1 B5	7D18-1 E5	7D24 E2	9D03-3 G6	FD49 B3	ID16 F6	ID29 G12	ID38 G10	ID47 H11	ID60 B4	ID71 C10	ID82 F5	cD05 E15
2D14 E7	2D26 F2	2D38 H2	2D47 H2	2D56 F6	2D65 F9	3D15 B4	3D24 C4	3D39-3 G3	3D45 F12	3D58 G11	3D71 H3	3D81 G4	3D90 E9	5D18 F6	7D11-2 C5	7D18-2 G5	7D25-1 C8	9D03-4 G6	FD54 B3	ID17 F13	ID30 C7	ID39 G2	ID48 B5	ID61 C4	ID72 C10	ID83 F5	
2D15 E7	2D27 F9	2D39 G13	2D48 H3	2D57 F14	2D66 F9	3D16 B5	3D25 C3	3D39-4 E5	3D46 F6	3D60 F6	3D72 H11	3D82 C7	3D91 E9	5D19 F14	7D12-1 D4	7D19 F11	7D25-2 B9	9D04-1 F13	FD73 C9	ID20 F2	ID31 B8	1D40 G7	ID50 B4	ID62 F1	ID74 F9	ID86 F4	
2D17 E15	2D28 H7	2D40 G13	2D49 H10	2D58 G14	2D70 C4	3D17 B2	3D26 D3	3D40-1 G11	3D47 F13	3D61 F13	3D73 H3	3D83 C7	5D10 E7	6D10 B4	7D12-2 C3	7D20 E12	7D26-1 C9	9D04-2 F13	FD74 F4	ID21 F11	ID32 G5	1D41 G15	ID51 B4	ID63 C7	ID75 F11	ID87 F4	
2D18 E15	2D30 F3	2D41 H7	2D50 H10	2D59 G6	2D71 G1	3D18 B2	3D34 E3	3D40-2 G11	3D49 E1	3D64 G4	3D74 H10	3D84 B8	5D11 E15	6D11 C4	7D14 F4	7D21-1 F12	7D26-2 B10	9D04-3 F13	ID11 E15	ID22 F12	ID33 G12	1D42 G3	ID52 B2	ID64 F14	ID76 F11	ID91 C10	
2D19 F2	2D31 F11	2D42 H7	2D51 C8	2D60 H9	2D72 F10	3D19 C4	3D35 E4	3D40-3 E11	3D50 F1	3D65 G11	3D75 B9	3D85 B8	5D12 F6	7D10-1 B3	7D15 E5	7D21-2 F12	7D30 F6	9D04-4 G13	ID12 E11	ID23 F4	ID34 G3	1D43 G10	ID53 B4	ID65 F6	ID77 F14	1D92 E6	
2D20 F7	2D32 F6	2D43 H14	2D52 E6	2D61 H9	3D10 A3	3D20 C5	3D37 E10	3D40-4 E13	3D51 F9	3D67 H3	3D76 G5	3D86 C9	5D13 F14	7D10-2 F3	7D16-1 F5	7D22 G12	7D31 F13	9D48 E2	ID13 E4	ID24 F9	ID35 G5	1D44 H2	ID55 C5	ID66 F9	ID78 F13	1D93 E6	
2D21 G14	2D35 G2	2D44 H15	2D53 F7	2D62 H9	3D12 A4	3D21 C2	3D38 E11	3D42 C3	3D54 F1	3D68 H3	3D77 E6	3D87 C10	5D14 G7	7D10-3 F10	7D16-2 F4	7D23-1 E12	9D03-1 F6	FD26 F2	ID14 F5	ID25 F1	ID36 G4	1D45 G13	ID56 C4	ID67 E9	ID80 E1	cD01 D15	

1 2 3 4 5 6 7 8 9 10 11 12 13 14 15

B8A AUDIO: AMPLIFIER

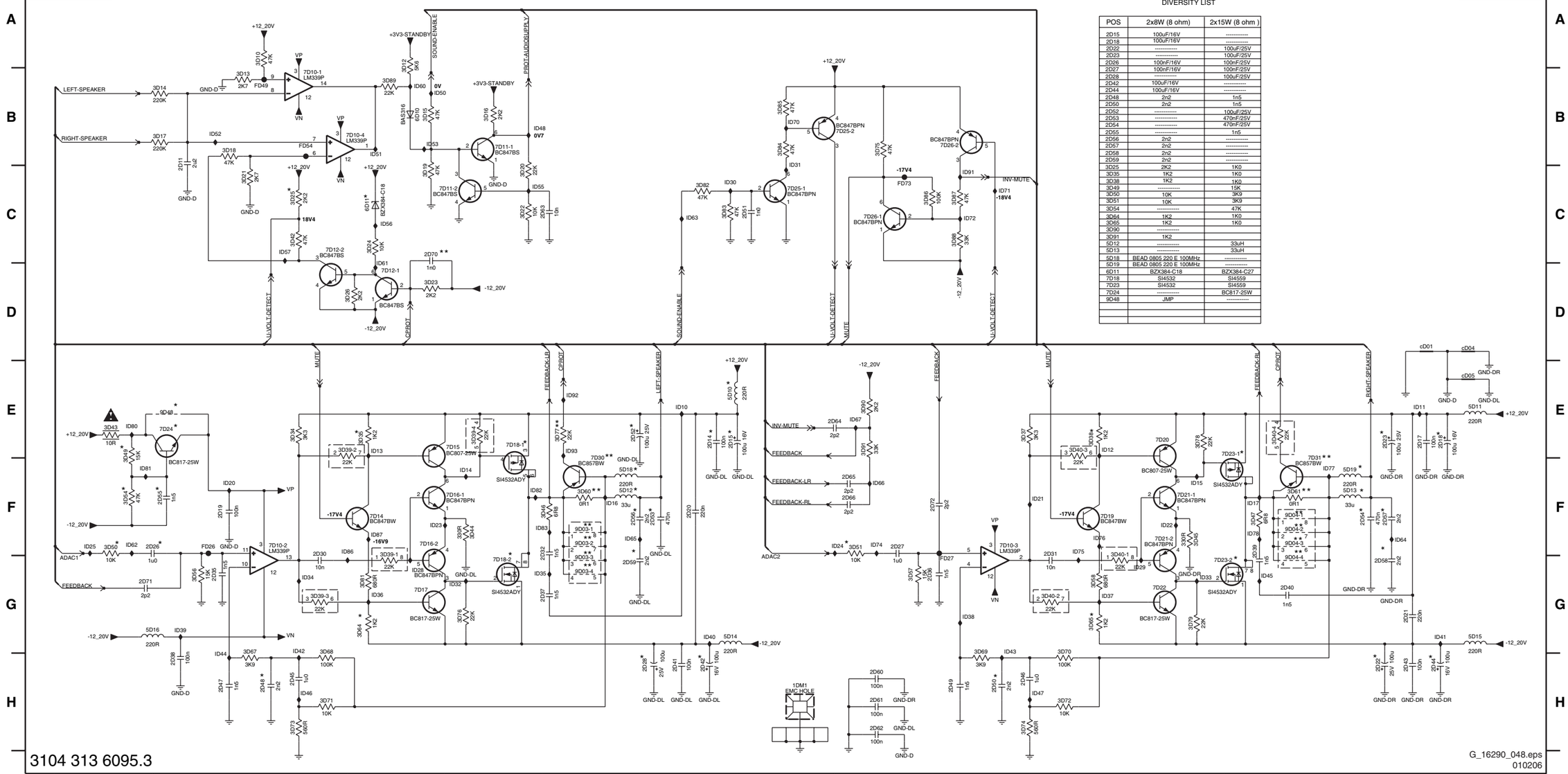

G_16290_048.eps
010206

SSB: Audio: Connectors

B8B AUDIO: CONNECTORS

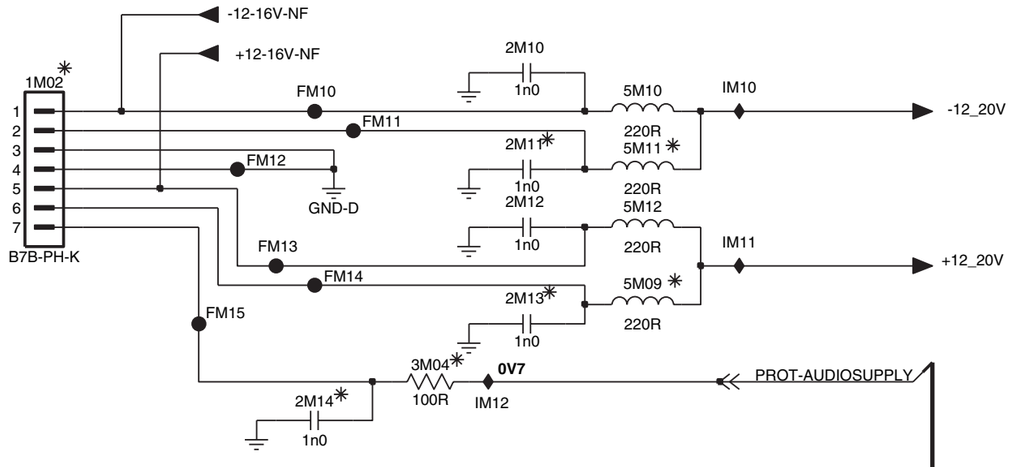

	2x8W (8 ohm)	2x15W (8 ohm)
2M11	----------	1nF
2M13	----------	1nF
2M14	----------	1nF
3M04	----------	100E
5M09	----------	220E 100MHz
5M11	----------	220E 100MHz

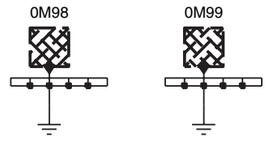

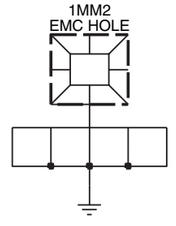

0M98 C6
0M99 C6
1740 C1
1M02 A1
1MM2 D6
2M10 A3
2M11 A3
2M12 B3
2M13 B3
2M14 B2
2M15 C3
2M16 C3
2M17 C3
2M18 C3
3M04 B3
5M02 C4
5M03 C4
5M09 B4
5M10 A4
5M11 A4
5M12 B4
FM10 A2
FM11 A3
FM12 B2
FM13 B2
FM14 B2
FM15 B2
FM16 C2
FM17 C2
FM18 C2
IM10 A4
IM11 B4
IM12 B3
IM13 C4
IM14 C4
IM15 C3
IM16 C3

3104 313 6095.3

G_16290_049.eps
010206

SSB: SRP List Part 1 (For both .3 & .4 version)

Schematic	Netname
B08a (7x)	+12_20V
B08b (1x)	+12_20V
B01b (2x)	+12-16V-NF
B08b (2x)	+12-16V-NF
B01a (1x)	+12VS
B01b (1x)	+12VS
B01a (2x)	+12VSW
B01b (2x)	+12VSW
B02a (4x)	+12VSW
B02b (2x)	+12VSW
B03e (4x)	+12VSW
B04a (2x)	+12VSW
B04e (2x)	+12VSW
B04g (8x)	+12VSW
B07c (34x)	+12VSW
B01a (4x)	+1V2
B02a (2x)	+1V2
B04e (4x)	+1V2
B05d (8x)	+1V2
B02a (2x)	+1V2_ATSC
B02a (1x)	+1V2F
B04e (2x)	+1V2-STANDBY
B05f (1x)	+1V2-STANDBY
B07a (3x)	+1V8
B07b (2x)	+1V8
B01a (2x)	+2V5
B02a (2x)	+2V5
B04d (2x)	+2V5
B05d (2x)	+2V5
B02a (1x)	+2V5A
B02a (1x)	+2V5A-ADC
B02a (1x)	+2V5A-PLL
B02a (1x)	+2V5A-XTAL
B01a (2x)	+2V5D
B04d (4x)	+2V5-DDRPNX
B04f (1x)	+2V5-DDRPNX
B02a (1x)	+2V5D-PLL
B02a (1x)	+2V5F
B05b (7x)	+2V5-VPR
B05d (3x)	+2V5-VPR
B01a (2x)	+3V3
B01b (4x)	+3V3
B02a (10x)	+3V3
B04e (4x)	+3V3
B04g (6x)	+3V3
B05a (42x)	+3V3
B05c (2x)	+3V3
B05d (8x)	+3V3
B05e (4x)	+3V3
B06 (2x)	+3V3
B07a (10x)	+3V3
B07b (2x)	+3V3
B07a (2x)	+3V3-AV
B06 (6x)	+3V3DAC
B02a (4x)	+3V3F
B03a (2x)	+3V3-STANDBY
B04e (2x)	+3V3-STANDBY
B04g (2x)	+3V3-STANDBY
B05e (6x)	+3V3-STANDBY
B05f (6x)	+3V3-STANDBY
B07d (4x)	+3V3-STANDBY
B08a (6x)	+3V3-STANDBY
B01b (2x)	+3V3-UART
B01b (4x)	+5V
B02a (2x)	+5V
B03a (6x)	+5V
B03b (12x)	+5V
B03c (2x)	+5V
B03e (4x)	+5V
B04e (4x)	+5V
B04g (4x)	+5V
B05a (4x)	+5V
B06 (2x)	+5V
B07a (2x)	+5V
B01b (8x)	+5V2-STBY
B03e (4x)	+5V2-STBY
B04a (2x)	+5V2-STBY
B05e (4x)	+5V2-STBY
B05f (8x)	+5V2-STBY
B03c (3x)	+5VaM
B03c (2x)	+5VbM
B02b (7x)	+5VTUN
B03c (2x)	+5VTUN
B03d (1x)	+5VTUN
B03d (1x)	+8V-AUD
B03e (1x)	+8V-AUD

B08a (8x)	-12_20V
B08b (1x)	-12_20V
B01b (2x)	-12-16V-NF
B08b (2x)	-12-16V-NF
B07a (1x)	1V8-PLL
B07b (2x)	1V8-PLL
B07a (1x)	3V3-APLL
B07b (1x)	3V3-APLL
B07a (2x)	3V3-AVI
B07b (1x)	3V3-AVI
B07a (3x)	3V3-DIG
B07b (6x)	3V3-DIG
B07a (1x)	3V3-PLL
B07b (1x)	3V3-PLL
B04a (1x)	ADAC1
B08a (1x)	ADAC1
B04a (1x)	ADAC2
B08a (1x)	ADAC2
B03e (1x)	ADAC7
B04a (1x)	ADAC7
B03e (1x)	ADAC8
B04a (1x)	ADAC8
B07a (3x)	AIN-5V
B04e (2x)	ALE
B03e (1x)	A-PLOP
B04a (1x)	A-PLOP
B05a (1x)	A-PLOP
B07a (1x)	ARX0-
B07b (1x)	ARX0-
B07a (1x)	ARX0+
B07b (1x)	ARX0+
B07a (1x)	ARX1-
B07b (1x)	ARX1-
B07a (1x)	ARX1+
B07b (1x)	ARX1+
B07a (1x)	ARX2-
B07b (1x)	ARX2-
B07a (1x)	ARX2+
B07b (1x)	ARX2+
B07a (1x)	ARXC-
B07b (1x)	ARXC-
B07a (1x)	ARXC+
B07b (1x)	ARXC+
B07a (2x)	ARX-DDC-SCL
B07a (2x)	ARX-DDC-SDA
B07a (2x)	ARX-HOTPLUG
B03a (1x)	AUDIO-HDPH-L-AP
B03e (1x)	AUDIO-HDPH-L-AP
B03a (1x)	AUDIO-HDPH-R-AP
B03e (1x)	AUDIO-HDPH-R-AP
B03d (1x)	AUDIO-IN1-L
B07c (1x)	AUDIO-IN1-L
B03d (1x)	AUDIO-IN1-R
B07c (1x)	AUDIO-IN1-R
B03d (1x)	AUDIO-IN2-L
B07c (1x)	AUDIO-IN2-L
B03d (1x)	AUDIO-IN2-R
B07c (1x)	AUDIO-IN2-R
B03a (1x)	AUDIO-IN3-L
B03d (1x)	AUDIO-IN3-L
B03a (1x)	AUDIO-IN3-R
B03d (1x)	AUDIO-IN3-R
B03d (1x)	AUDIO-IN4-L
B07c (1x)	AUDIO-IN4-L
B03d (1x)	AUDIO-IN4-R
B07c (1x)	AUDIO-IN4-R
B03a (1x)	AUDIO-IN5-L
B03d (1x)	AUDIO-IN5-L
B03a (1x)	AUDIO-IN5-R
B03d (1x)	AUDIO-IN5-R
B03a (1x)	AUDIO-OUT1-L
B03d (1x)	AUDIO-OUT1-L
B03a (1x)	AUDIO-OUT1-R
B03d (1x)	AUDIO-OUT1-R
B02a (1x)	AUX-IF-AGC
B02b (1x)	AUX-IF-AGC
B03a (1x)	AV1_CVBS
B07c (1x)	AV1_CVBS
B03a (1x)	AV1-AV6_FBL-HSYNC
B04a (1x)	AV1-AV6_FBL-HSYNC
B03a (1x)	AV2_C
B07c (1x)	AV2_C
B04a (2x)	AV2_FBL
B03a (1x)	AV2_Y-CVBS
B07c (1x)	AV2_Y-CVBS
B04a (2x)	AV6_VSYNC
B03a (1x)	AV7_Y-CVBS
B07c (1x)	AV7_Y-CVBS

B04g (1x)	AV-BOUT
B06 (1x)	AV-BOUT
B04g (1x)	AV-GOUT
B06 (1x)	AV-GOUT
B04g (1x)	AV-ROUT
B06 (1x)	AV-ROUT
B01b (1x)	BACKLIGHT-CNTRL-OUT
B04g (1x)	BACKLIGHT-CNTRL-OUT
B04e (1x)	BACKLIGHT-CONTROL
B04g (1x)	BACKLIGHT-CONTROL
B05c (1x)	BACKLIGHT-CONTROL
B02a (1x)	CHDEC-CLK
B05a (1x)	CHDEC-CLK
B05c (1x)	CHDEC-CLK
B03b (1x)	CLK-MPIF
B04a (1x)	CLK-MPIF
B08a (3x)	CPROT
B04g (1x)	CTRL1-VIPER
B05c (1x)	CTRL1-VIPER
B04e (1x)	CTRL4-STBY
B04g (1x)	CTRL4-STBY
B04g (1x)	CTRL4-VIPER
B05a (2x)	CTRL4-VIPER
B04g (2x)	CTRL-DISP1
B04g (2x)	CTRL-DISP2
B04g (2x)	CTRL-DISP3
B04g (2x)	CTRL-DISP4
B03a (2x)	CVBS-IN
B03a (1x)	CVBSOUTIF-MAIN
B03c (1x)	CVBSOUTIF-MAIN
B03a (1x)	DATA1N-MAIN
B04a (1x)	DATA1N-MAIN
B03a (1x)	DATA1P-MAIN
B04a (1x)	DATA1P-MAIN
B03a (1x)	DATA2N-MAIN
B04a (1x)	DATA2N-MAIN
B03a (1x)	DATA2P-MAIN
B04a (1x)	DATA2P-MAIN
B03a (1x)	DATA3N-MAIN
B04a (1x)	DATA3N-MAIN
B03a (1x)	DATA3P-MAIN
B04a (1x)	DATA3P-MAIN
B04e (2x)	DEBUG-BREAK
B05a (2x)	DEBUG-BREAK
B04e (2x)	DETECT-12V
B04e (2x)	DETECT-1V2
B04e (2x)	DETECT-3V3
B04e (2x)	DETECT-5V
B04e (2x)	DETECT-8V6
B03a (1x)	DMMI_B-PB-IN
B03a (1x)	DMMI_G-Y-IN
B03a (1x)	DMMI_R-PR-IN
B03d (1x)	DSNDL1
B04a (1x)	DSNDL1
B03d (1x)	DSNDR1
B04a (1x)	DSNDR1
B02a (1x)	DV1F-CLK
B05c (1x)	DV1F-CLK
B02a (1x)	DV1F-DATA0
B05c (1x)	DV1F-DATA0
B02a (1x)	DV1F-DATA1
B05c (1x)	DV1F-DATA1
B02a (1x)	DV1F-DATA2
B05c (1x)	DV1F-DATA2
B02a (1x)	DV1F-DATA3
B05c (1x)	DV1F-DATA3
B02a (1x)	DV1F-DATA4
B05c (1x)	DV1F-DATA4
B02a (1x)	DV1F-DATA5
B05c (1x)	DV1F-DATA5
B02a (1x)	DV1F-DATA6
B05c (1x)	DV1F-DATA6
B02a (1x)	DV1F-DATA7
B05c (1x)	DV1F-DATA7
B02a (1x)	DV1F-DATA8_ERR
B05c (1x)	DV1F-DATA8_ERR
B02a (1x)	DV1F-DATA9_SOP
B05c (1x)	DV1F-DATA9_SOP
B02a (1x)	DV1F-VALID
B05c (2x)	DV1F-VALID
B04b (1x)	DV2A-CLK
B05c (1x)	DV2A-CLK
B05c (2x)	DV2A-VALID
B04b (1x)	DV3F-CLK
B05c (1x)	DV3F-CLK
B04b (1x)	DV3F-DATA0_SOP
B05c (1x)	DV3F-DATA0_SOP
B04b (1x)	DV3F-DATA1_ERR

B05c (1x)	DV3F-DATA1_ERR
B04b (1x)	DV3F-DATA2_0
B05c (1x)	DV3F-DATA2_0
B04b (1x)	DV3F-DATA3_1
B05c (1x)	DV3F-DATA3_1
B04b (1x)	DV3F-DATA4_2
B05c (1x)	DV3F-DATA4_2
B04b (1x)	DV3F-DATA5_3
B05c (1x)	DV3F-DATA5_3
B04b (1x)	DV3F-DATA6_4
B05c (1x)	DV3F-DATA6_4
B04b (1x)	DV3F-DATA7_5
B05c (1x)	DV3F-DATA7_5
B04b (1x)	DV3F-DATA8_6
B05c (1x)	DV3F-DATA8_6
B04b (1x)	DV3F-DATA9_7
B05c (1x)	DV3F-DATA9_7
B04b (1x)	DV3F-VALID
B05c (2x)	DV3F-VALID
B04b (1x)	DV4-CLK
B07b (1x)	DV4-CLK
B04b (1x)	DV4-DATA0_SOP
B07b (1x)	DV4-DATA0_SOP
B04b (1x)	DV4-DATA1_ERR
B07b (1x)	DV4-DATA1_ERR
B04b (1x)	DV4-DATA2_0
B07b (1x)	DV4-DATA2_0
B04b (1x)	DV4-DATA3_1
B07b (1x)	DV4-DATA3_1
B04b (1x)	DV4-DATA4_2
B07b (1x)	DV4-DATA4_2
B04b (1x)	DV4-DATA5_3
B07b (1x)	DV4-DATA5_3
B04b (1x)	DV4-DATA6_4
B07b (1x)	DV4-DATA6_4
B04b (1x)	DV4-DATA7_5
B07b (1x)	DV4-DATA7_5
B04b (1x)	DV4-DATA8_6
B07b (1x)	DV4-DATA8_6
B04b (1x)	DV4-DATA9_7
B07b (1x)	DV4-DATA9_7
B04b (1x)	DV4-VALID
B07b (1x)	DV4-VALID
B04b (1x)	DV5-DATA0_SOP
B07b (1x)	DV5-DATA0_SOP
B04b (1x)	DV5-DATA1_ERR
B07b (1x)	DV5-DATA1_ERR
B04b (1x)	DV5-DATA2_0
B07b (1x)	DV5-DATA2_0
B04b (1x)	DV5-DATA3_1
B07b (1x)	DV5-DATA3_1
B04b (1x)	DV5-DATA4_2
B07b (1x)	DV5-DATA4_2
B04b (1x)	DV5-DATA5_3
B07b (1x)	DV5-DATA5_3
B04b (1x)	DV5-DATA6_4
B07b (1x)	DV5-DATA6_4
B04b (1x)	DV5-DATA7_5
B07b (1x)	DV5-DATA7_5
B04b (1x)	DV5-DATA8_6
B07b (1x)	DV5-DATA8_6
B04b (1x)	DV5-DATA9_7
B07b (1x)	DV5-DATA9_7
B05c (1x)	DV-BOUT-0
B06 (2x)	DV-BOUT-0
B05c (1x)	DV-BOUT-1
B06 (2x)	DV-BOUT-1
B05c (1x)	DV-BOUT-2
B06 (2x)	DV-BOUT-2
B05c (1x)	DV-BOUT-3
B06 (2x)	DV-BOUT-3
B05c (1x)	DV-BOUT-4
B06 (2x)	DV-BOUT-4
B05c (1x)	DV-BOUT-5
B06 (2x)	DV-BOUT-5
B05c (1x)	DV-BOUT-6
B06 (2x)	DV-BOUT-6
B05c (1x)	DV-BOUT-7
B06 (2x)	DV-BOUT-7
B05c (1x)	DV-BOUT-8
B06 (2x)	DV-BOUT-8
B05c (1x)	DV-BOUT-9
B06 (2x)	DV-BOUT-9
B05c (1x)	DV-CLKIN
B06 (2x)	DV-CLKIN
B04b (1x)	DV-FREF
B07b (1x)	DV-FREF
B05c (1x)	DV-GOUT-0

B06 (2x)	DV-GOUT-0
B05c (1x)	DV-GOUT-1
B06 (2x)	DV-GOUT-1
B05c (1x)	DV-GOUT-2
B06 (2x)	DV-GOUT-2
B05c (1x)	DV-GOUT-3
B06 (2x)	DV-GOUT-3
B05c (1x)	DV-GOUT-4
B06 (2x)	DV-GOUT-4
B05c (1x)	DV-GOUT-5
B06 (2x)	DV-GOUT-5
B05c (1x)	DV-GOUT-6
B06 (2x)	DV-GOUT-6
B05c (1x)	DV-GOUT-7
B06 (2x)	DV-GOUT-7
B05c (1x)	DV-GOUT-8
B06 (2x)	DV-GOUT-8
B05c (1x)	DV-GOUT-9
B06 (2x)	DV-GOUT-9
B04b (1x)	DV-HREF
B07b (2x)	DV-HREF
B05c (1x)	DV-OUT-DE
B06 (2x)	DV-OUT-DE
B05c (1x)	DV-OUT-FFIELD
B06 (1x)	DV-OUT-FFIELD
B05c (1x)	DV-OUT-HS
B06 (1x)	DV-OUT-HS
B05c (1x)	DV-OUT-VS
B06 (2x)	DV-OUT-VS
B05c (1x)	DV-ROUT-0
B06 (2x)	DV-ROUT-0
B05c (1x)	DV-ROUT-1
B06 (2x)	DV-ROUT-1
B05c (1x)	DV-ROUT-2
B06 (2x)	DV-ROUT-2
B05c (1x)	DV-ROUT-3
B06 (2x)	DV-ROUT-3
B05c (1x)	DV-ROUT-4
B06 (2x)	DV-ROUT-4
B05c (1x)	DV-ROUT-5
B06 (2x)	DV-ROUT-5
B05c (1x)	DV-ROUT-6
B06 (2x)	DV-ROUT-6
B05c (1x)	DV-ROUT-7
B06 (2x)	DV-ROUT-7
B05c (1x)	DV-ROUT-8
B06 (2x)	DV-ROUT-8
B05c (1x)	DV-ROUT-9
B06 (2x)	DV-ROUT-9
B04b (1x)	DV-VREF
B07b (2x)	DV-VREF
B04e (2x)	EA
B01b (1x)	EJTAG-DETECT
B04e (2x)	EJTAG-DETECT
B01b (1x)	EJTAG-TCK
B05a (1x)	EJTAG-TCK
B01b (1x)	EJTAG-TDI
B05a (1x)	EJTAG-TDI
B01b (1x)	EJTAG-TDO
B05a (1x)	EJTAG-TDO
B01b (1x)	EJTAG-TMS
B05a (1x)	EJTAG-TMS
B01a (1x)	ENABLE-1V2
B04e (2x)	ENABLE-1V2
B01a (1x)	ENABLE-3V3
B04e (2x)	ENABLE-3V3
B02a (1x)	FAT-ADC-INN
B02b (1x)	FAT-ADC-INN
B02a (1x)	FAT-ADC-INP
B02b (1x)	FAT-ADC-INP
B02a (1x)	FAT-IF-AGC
B02b (1x)	FAT-IF-AGC
B08a (3x)	FEEDBACK
B08a (2x)	FEEDBACK-LR
B08a (2x)	FEEDBACK-RL
B02a (1x)	FM-TRAP
B02b (1x)	FM-TRAP
B03a (2x)	FRONT_C
B03a (2x)	FRONT_Y-CVBS
B04e (2x)	FRONT-DETECT
B01b (1x)	GLINK-RXD
B04g (1x)	GLINK-RXD
B05a (1x)	GLINK-RXD
B01b (1x)	GLINK-TXD
B04g (1x)	GLINK-TXD
B05a (1x)	GLINK-TXD
B01b (1x)	GND-D
B08a (16x)	GND-D

B08b (4x)	GND-D
B08a (11x)	GND-DL
B08a (11x)	GND-DR
B01a (15x)	GND-SIG
B03a (1x)	H_SYNC_IN
B05a (1x)	HDMI-COAST
B07b (1x)	HDMI-COAST
B03a (1x)	HP-DET-R-DC
B05a (1x)	HPD-HIRATE
B07a (1x)	HPD-HIRATE
B07b (1x)	HPD-HIRATE
B07b (1x)	H-SYNC-VGA
B03a (1x)	HV-PRM-MAIN
B04a (1x)	HV-PRM-MAIN
B02a (1x)	I2C-SCL-TUNER
B02b (1x)	I2C-SCL-TUNER
B02a (1x)	I2C-SDA-TUNER
B02b (1x)	I2C-SDA-TUNER
B04a (1x)	I2S-BCLK-MAIN
B05c (1x)	I2S-BCLK-MAIN
B04a (1x)	I2S-MAIN-D
B05c (1x)	I2S-MAIN-D
B04a (1x)	I2S-MAIN-ND
B05c (1x)	I2S-MAIN-ND
B04a (1x)	I2S-MCH-CSW
B05c (1x)	I2S-MCH-CSW
B04a (1x)	I2S-MCH-LR
B05c (1x)	I2S-MCH-LR
B04a (1x)	I2S-MCH-SLR
B05c (1x)	I2S-MCH-SLR
B04a (1x)	I2S-SUB-D
B05c (1x)	I2S-SUB-D
B04a (1x)	I2S-WS-MAIN
B05c (1x)	I2S-WS-MAIN
B02b (1x)	IF-ANA
B03c (1x)	IF-ANA
B08a (2x)	INV-MUTE
B04e (1x)	IRQ-AVIP
B05a (1x)	IRQ-AVIP
B02a (1x)	IRQ-FE-MAIN
B05a (1x)	IRQ-FE-MAIN
B04e (1x)	IRQ-HD1
B05a (2x)	IRQ-HD1
B04e (1x)	IRQ-HD2
B05a (2x)	IRQ-HD2
B04e (1x)	IRQ-HIRATE
B05a (2x)	IRQ-HIRATE
B07b (1x)	IRQ-HIRATE
B05a (2x)	IRQ-MAIN
B03b (1x)	IRQ-MPIF
B05a (1x)	IRQ-MPIF
B03a (1x)	ITV-IR-SW-RESET
B04e (1x)	JTAG-TCK
B05a (2x)	JTAG-TCK
B07b (1x)	JTAG-TCK
B05a (3x)	JTAG-TD-CON-VIPER
B07b (2x)	JTAG-TD-HDMI-CON
B04e (1x)	JTAG-TD-PNX2015-HDMI
B07b (1x)	JTAG-TD-PNX2015-HDMI
B04e (1x)	JTAG-TD-VIPER-PNX2015
B05a (2x)	JTAG-TD-VIPER-PNX2015
B04e (1x)	JTAG-TMS
B05a (3x)	JTAG-TMS
B07b (1x)	JTAG-TMS
B01b (1x)	JTAG-TRST
B04e (1x)	JTAG-TRST

3104 313 6095.3 & 4

G_16290_096.eps
150206

SSB: SRP List Part 2 (For both .3 & .4 version)

Schematic	Netname
B05a (2x)	JTAG-TRST
B07b (1x)	JTAG-TRST
B04e (2x)	KEYBOARD
B05f (1x)	KEYBOARD
B04e (2x)	LAMP-ON
B04g (1x)	LAMP-ON
B01b (1x)	LAMP-ON-OUT
B04g (1x)	LAMP-ON-OUT
B04e (2x)	LED1
B05f (1x)	LED1
B04e (2x)	LED2
B05f (1x)	LED2
B08a (2x)	LEFT-SPEAKER
B08b (1x)	LEFT-SPEAKER
B04e (1x)	LIGHT-SENSOR
B05f (1x)	LIGHT-SENSOR
B04f (3x)	LVDS-3V3
B05a (1x)	M135-CLK
B07b (1x)	M135-CLK
B04e (1x)	M27-PNX
B05a (1x)	M27-PNX
B05b (3x)	MM_A0
B05b (3x)	MM_A1
B05b (3x)	MM_A10
B05b (3x)	MM_A11
B05b (3x)	MM_A12
B05b (3x)	MM_A2
B05b (3x)	MM_A3
B05b (3x)	MM_A4
B05b (3x)	MM_A5
B05b (3x)	MM_A6
B05b (3x)	MM_A7
B05b (3x)	MM_A8
B05b (3x)	MM_A9
B05b (3x)	MM_BA0
B05b (3x)	MM_BA1
B05b (3x)	MM_CAS
B05b (3x)	MM_CKE
B05b (3x)	MM_CLK_N
B05b (3x)	MM_CLK_P
B05b (3x)	MM_CS0
B05b (2x)	MM_DATA_0
B05b (2x)	MM_DATA_1
B05b (2x)	MM_DATA_10
B05b (2x)	MM_DATA_11
B05b (2x)	MM_DATA_12
B05b (2x)	MM_DATA_13
B05b (2x)	MM_DATA_14
B05b (2x)	MM_DATA_15
B05b (2x)	MM_DATA_16
B05b (2x)	MM_DATA_17
B05b (2x)	MM_DATA_18
B05b (2x)	MM_DATA_19
B05b (2x)	MM_DATA_2
B05b (2x)	MM_DATA_20
B05b (2x)	MM_DATA_21
B05b (2x)	MM_DATA_22
B05b (2x)	MM_DATA_23
B05b (2x)	MM_DATA_24
B05b (2x)	MM_DATA_25
B05b (2x)	MM_DATA_26
B05b (2x)	MM_DATA_27
B05b (2x)	MM_DATA_28
B05b (2x)	MM_DATA_29
B05b (2x)	MM_DATA_3
B05b (2x)	MM_DATA_30
B05b (2x)	MM_DATA_31
B05b (2x)	MM_DATA_4
B05b (2x)	MM_DATA_5
B05b (2x)	MM_DATA_6
B05b (2x)	MM_DATA_7
B05b (2x)	MM_DATA_8
B05b (2x)	MM_DATA_9
B05b (2x)	MM_DQM_0
B05b (2x)	MM_DQM_1
B05b (2x)	MM_DQM_2
B05b (2x)	MM_DQM_3
B05b (2x)	MM_DQS0
B05b (2x)	MM_DQS1
B05b (2x)	MM_DQS2
B05b (2x)	MM_DQS3
B05b (3x)	MM_RAS
B05b (3x)	MM_WE
B04b (1x)	MP-BOUT-0
B06 (1x)	MP-BOUT-0
B04b (1x)	MP-BOUT-1
B06 (1x)	MP-BOUT-1
B04b (1x)	MP-BOUT-2
B06 (1x)	MP-BOUT-2
B04b (1x)	MP-BOUT-3
B06 (1x)	MP-BOUT-3
B04b (1x)	MP-BOUT-4
B06 (1x)	MP-BOUT-4
B04b (1x)	MP-BOUT-5
B06 (1x)	MP-BOUT-5
B04b (1x)	MP-BOUT-6
B06 (1x)	MP-BOUT-6
B04b (1x)	MP-BOUT-7
B06 (1x)	MP-BOUT-7
B04b (1x)	MP-BOUT-8
B06 (1x)	MP-BOUT-8
B04b (1x)	MP-BOUT-9
B06 (1x)	MP-BOUT-9
B04b (1x)	MP-CLKOUT
B06 (1x)	MP-CLKOUT
B04b (1x)	MP-GOUT-0
B06 (1x)	MP-GOUT-0
B04b (1x)	MP-GOUT-1
B06 (1x)	MP-GOUT-1
B04b (1x)	MP-GOUT-2
B06 (1x)	MP-GOUT-2
B04b (1x)	MP-GOUT-3
B06 (1x)	MP-GOUT-3
B04b (1x)	MP-GOUT-4
B06 (1x)	MP-GOUT-4
B04b (1x)	MP-GOUT-5
B06 (1x)	MP-GOUT-5
B04b (1x)	MP-GOUT-6
B06 (1x)	MP-GOUT-6
B04b (1x)	MP-GOUT-7
B06 (1x)	MP-GOUT-7
B04b (1x)	MP-GOUT-8
B06 (1x)	MP-GOUT-8
B04b (1x)	MP-GOUT-9
B06 (1x)	MP-GOUT-9
B04b (1x)	MP-OUT-DE
B06 (1x)	MP-OUT-DE
B04b (1x)	MP-OUT-FFIELD
B06 (1x)	MP-OUT-FFIELD
B04b (1x)	MP-OUT-HS
B04g (1x)	MP-OUT-HS
B06 (1x)	MP-OUT-HS
B04b (1x)	MP-OUT-VS
B04g (1x)	MP-OUT-VS
B06 (1x)	MP-OUT-VS
B04b (1x)	MP-ROUT-0
B06 (1x)	MP-ROUT-0
B04b (1x)	MP-ROUT-1
B06 (1x)	MP-ROUT-1
B04b (1x)	MP-ROUT-2
B06 (1x)	MP-ROUT-2
B04b (1x)	MP-ROUT-3
B06 (1x)	MP-ROUT-3
B04b (1x)	MP-ROUT-4
B06 (1x)	MP-ROUT-4
B04b (1x)	MP-ROUT-5
B06 (1x)	MP-ROUT-5
B04b (1x)	MP-ROUT-6
B06 (1x)	MP-ROUT-6
B04b (1x)	MP-ROUT-7
B06 (1x)	MP-ROUT-7
B04b (1x)	MP-ROUT-8
B06 (1x)	MP-ROUT-8
B04b (1x)	MP-ROUT-9
B06 (1x)	MP-ROUT-9
B08a (3x)	MUTE
B05a (1x)	NAND-AD(0)
B05e (1x)	NAND-AD(0)
B05a (1x)	NAND-AD(1)
B05e (1x)	NAND-AD(1)
B05a (1x)	NAND-AD(2)
B05e (1x)	NAND-AD(2)
B05a (1x)	NAND-AD(3)
B05e (1x)	NAND-AD(3)
B05a (1x)	NAND-AD(4)
B05e (1x)	NAND-AD(4)
B05a (1x)	NAND-AD(5)
B05e (1x)	NAND-AD(5)
B05a (1x)	NAND-AD(6)
B05e (1x)	NAND-AD(6)
B05a (1x)	NAND-AD(7)
B05e (1x)	NAND-AD(7)
B05a (1x)	NAND-ALE
B05e (1x)	NAND-ALE
B05a (1x)	NAND-CLE
B05e (1x)	NAND-CLE
B05a (1x)	NAND-D(10)
B05e (1x)	NAND-D(10)
B05a (1x)	NAND-D(11)
B05e (1x)	NAND-D(11)
B05a (1x)	NAND-D(12)
B05e (1x)	NAND-D(12)
B05a (1x)	NAND-D(13)
B05e (1x)	NAND-D(13)
B05a (1x)	NAND-D(14)
B05e (1x)	NAND-D(14)
B05a (1x)	NAND-D(15)
B05e (1x)	NAND-D(15)
B05a (2x)	NAND-D(8)
B05e (1x)	NAND-D(8)
B05a (1x)	NAND-D(9)
B05e (1x)	NAND-D(9)
B05a (1x)	NAND-RBY
B05e (2x)	NAND-RBY
B05a (1x)	NAND-REn
B05e (1x)	NAND-REn
B05a (1x)	NAND-SEL
B05e (2x)	NAND-SEL
B05a (1x)	NAND-WEn
B05e (1x)	NAND-WEn
B04e (2x)	ON-MODE
B04g (1x)	ON-MODE
B05f (1x)	ON-MODE
B06 (1x)	ON-MODE
B04e (1x)	P0_6
B04e (2x)	P3_2
B04e (2x)	P4_4
B04e (1x)	P50
B04e (2x)	P50-HDMI
B07a (1x)	P50-HDMI
B07a (1x)	PARX-DDC-SCL
B07b (1x)	PARX-DDC-SCL
B07a (1x)	PARX-DDC-SDA
B07b (1x)	PARX-DDC-SDA
B07b (1x)	PB
B07c (1x)	PB
B07b (1x)	PB1
B07c (1x)	PB1
B05a (2x)	PCI-CLK-VPR
B05a (2x)	PCI-INTA
B05a (2x)	PCI-REQ
B05a (2x)	PCI-REQ-A
B05a (2x)	PCI-REQ-B
B04f (2x)	PLL-1V2
B04f (2x)	PLL-3V3
B05a (2x)	PLL-OUT
B04d (2x)	PNX-MA-0
B04d (2x)	PNX-MA-1
B04d (2x)	PNX-MA-10
B04d (2x)	PNX-MA-11
B04d (2x)	PNX-MA-12
B04d (2x)	PNX-MA-2
B04d (2x)	PNX-MA-3
B04d (2x)	PNX-MA-4
B04d (2x)	PNX-MA-5
B04d (2x)	PNX-MA-6
B04d (2x)	PNX-MA-7
B04d (2x)	PNX-MA-8
B04d (2x)	PNX-MA-9
B04d (2x)	PNX-MBA0
B04d (2x)	PNX-MBA1
B04d (2x)	PNX-MCAS
B04d (2x)	PNX-MCKE
B04d (2x)	PNX-MCLK-N
B04d (2x)	PNX-MCLK-P
B04d (2x)	PNX-MCS-0
B04d (2x)	PNX-MDATA-0
B04d (2x)	PNX-MDATA-1
B04d (2x)	PNX-MDATA-10
B04d (2x)	PNX-MDATA-11
B04d (2x)	PNX-MDATA-12
B04d (2x)	PNX-MDATA-13
B04d (2x)	PNX-MDATA-14
B04d (2x)	PNX-MDATA-15
B04d (2x)	PNX-MDATA-2
B04d (2x)	PNX-MDATA-3
B04d (2x)	PNX-MDATA-4
B04d (2x)	PNX-MDATA-5
B04d (2x)	PNX-MDATA-6
B04d (2x)	PNX-MDATA-7
B04d (2x)	PNX-MDATA-8
B04d (2x)	PNX-MDATA-9
B04d (2x)	PNX-MDQM-0
B04d (2x)	PNX-MDQM-1
B04d (2x)	PNX-MDQS-0
B04d (2x)	PNX-MDQS-1
B04d (2x)	PNX-MRAS
B04d (2x)	PNX-MWE
B01b (1x)	POD-MODE
B04e (2x)	POD-MODE
B03a (1x)	POWER-DOWN_BOLT-ON
B05a (1x)	POWERDOWN-HDMI
B07b (1x)	POWERDOWN-HDMI
B04e (3x)	POWER-OK-DISPLAY
B07b (1x)	PR
B07c (1x)	PR
B07b (1x)	PR1
B07c (1x)	PR1
B04e (1x)	PROT-AUDIOSUPPLY
B08a (1x)	PROT-AUDIOSUPPLY
B08b (1x)	PROT-AUDIOSUPPLY
B04e (2x)	PSEN
B03a (1x)	RC
B04e (2x)	RC
B05f (1x)	RC
B04a (1x)	RESET-AUDIO
B04e (2x)	RESET-AUDIO
B02a (1x)	RESET-FE-MAIN
B05a (2x)	RESET-FE-MAIN
B04e (2x)	RESET-MAIN-NVM
B05e (1x)	RESET-MAIN-NVM
B04e (3x)	RESET-MIPS
B05a (1x)	RESET-MIPS
B04e (3x)	RESET-PNX2015
B04e (1x)	RESET-STBY
B05f (1x)	RESET-STBY
B01b (1x)	RESET-SYSTEM
B04e (2x)	RESET-SYSTEM
B05a (1x)	RESET-SYSTEM
B08a (2x)	RIGHT-SPEAKER
B08b (1x)	RIGHT-SPEAKER
B01b (1x)	RXD
B05e (1x)	RXD
B07d (1x)	RXD
B04e (1x)	RXD-UP
B05e (1x)	RXD-UP
B05a (1x)	RXD-VIPER
B05e (1x)	RXD-VIPER
B02a (1x)	SCL-DMA
B03a (1x)	SCL-DMA
B03b (1x)	SCL-DMA
B04e (3x)	SCL-DMA
B05a (2x)	SCL-DMA
B05a (2x)	SCL-I2C4
B04g (1x)	SCL-I2C4
B05a (2x)	SCL-MM
B07b (1x)	SCL-MM
B04e (2x)	SCL-UP-SW
B04e (2x)	SCL-UP-VIP
B05a (1x)	SCL-UP-VIP
B05e (1x)	SCL-UP-VIP
B03a (1x)	SC-STANDBY
B02a (1x)	SDA-DMA
B03a (1x)	SDA-DMA
B03b (1x)	SDA-DMA
B04e (3x)	SDA-DMA
B05a (2x)	SDA-DMA
B04g (1x)	SDA-I2C4
B05a (2x)	SDA-I2C4
B05a (2x)	SDA-MM
B07b (1x)	SDA-MM
B04e (2x)	SDA-UP-SW
B04e (2x)	SDA-UP-VIP
B05a (1x)	SDA-UP-VIP
B05e (1x)	SDA-UP-VIP
B04e (3x)	SDM
B05a (1x)	SOUND-ENABLE
B08a (2x)	SOUND-ENABLE
B05a (2x)	SOUND-ENABLE-VPR
B05c (1x)	SPDIF-HDMI
B07b (1x)	SPDIF-HDMI
B05c (1x)	SPDIF-OUT1
B07c (1x)	SPDIF-OUT1
B04e (2x)	SPI-CLK
B04e (2x)	SPI-CSB
B04e (2x)	SPI-PROG
B04e (2x)	SPI-SDI
B04e (2x)	SPI-SDO
B04e (3x)	SPI-WP
B01b (1x)	STANDBY
B05f (1x)	STANDBY
B04e (2x)	STBY-WP-NAND-FLASH
B05e (1x)	STBY-WP-NAND-FLASH
B03a (1x)	STROBE1N-MAIN
B04a (1x)	STROBE1N-MAIN
B03a (1x)	STROBE1P-MAIN
B04a (1x)	STROBE1P-MAIN
B03a (1x)	STROBE2N-MAIN
B04a (1x)	STROBE2N-MAIN
B03a (1x)	STROBE2P-MAIN
B04a (1x)	STROBE2P-MAIN
B03a (1x)	STROBE3N-MAIN
B04a (1x)	STROBE3N-MAIN
B03a (1x)	STROBE3P-MAIN
B04a (1x)	STROBE3P-MAIN
B01a (1x)	SUPPLY-FAULT
B04e (2x)	SUPPLY-FAULT
B04e (2x)	TEMP-SENSOR
B04c (1x)	TUN-VIPER-RX-BUSY
B05c (1x)	TUN-VIPER-RX-BUSY
B04c (1x)	TUN-VIPER-RX-CLKP
B05c (1x)	TUN-VIPER-RX-CLKP
B04c (1x)	TUN-VIPER-RX-DATA0
B05c (1x)	TUN-VIPER-RX-DATA0
B04c (1x)	TUN-VIPER-RX-DATA1
B05c (1x)	TUN-VIPER-RX-DATA1
B04c (1x)	TUN-VIPER-RX-DATA10
B05c (1x)	TUN-VIPER-RX-DATA10
B04c (1x)	TUN-VIPER-RX-DATA11
B05c (1x)	TUN-VIPER-RX-DATA11
B04c (1x)	TUN-VIPER-RX-DATA12
B05c (1x)	TUN-VIPER-RX-DATA12
B04c (1x)	TUN-VIPER-RX-DATA13
B05c (1x)	TUN-VIPER-RX-DATA13
B04c (1x)	TUN-VIPER-RX-DATA14
B05c (1x)	TUN-VIPER-RX-DATA14
B04c (1x)	TUN-VIPER-RX-DATA15
B05c (1x)	TUN-VIPER-RX-DATA15
B04c (1x)	TUN-VIPER-RX-DATA2
B05c (1x)	TUN-VIPER-RX-DATA2
B04c (1x)	TUN-VIPER-RX-DATA3
B05c (1x)	TUN-VIPER-RX-DATA3
B04c (1x)	TUN-VIPER-RX-DATA4
B05c (1x)	TUN-VIPER-RX-DATA4
B04c (1x)	TUN-VIPER-RX-DATA5
B05c (1x)	TUN-VIPER-RX-DATA5
B04c (1x)	TUN-VIPER-RX-DATA6
B05c (1x)	TUN-VIPER-RX-DATA6
B04c (1x)	TUN-VIPER-RX-DATA7
B05c (1x)	TUN-VIPER-RX-DATA7
B04c (1x)	TUN-VIPER-RX-DATA8
B05c (1x)	TUN-VIPER-RX-DATA8
B04c (1x)	TUN-VIPER-RX-DATA9
B05c (1x)	TUN-VIPER-RX-DATA9
B04c (1x)	TUN-VIPER-TX-BUSY
B05c (1x)	TUN-VIPER-TX-BUSY
B04c (1x)	TUN-VIPER-TX-CLKN
B05c (1x)	TUN-VIPER-TX-CLKN
B04c (1x)	TUN-VIPER-TX-CLKP
B05c (1x)	TUN-VIPER-TX-CLKP
B04c (1x)	TUN-VIPER-TX-DATA0
B05c (1x)	TUN-VIPER-TX-DATA0
B04c (1x)	TUN-VIPER-TX-DATA1
B05c (1x)	TUN-VIPER-TX-DATA1
B04c (1x)	TUN-VIPER-TX-DATA10
B05c (1x)	TUN-VIPER-TX-DATA10
B04c (1x)	TUN-VIPER-TX-DATA11
B05c (1x)	TUN-VIPER-TX-DATA11
B04c (1x)	TUN-VIPER-TX-DATA12
B05c (1x)	TUN-VIPER-TX-DATA12
B04c (1x)	TUN-VIPER-TX-DATA13
B05c (1x)	TUN-VIPER-TX-DATA13
B04c (1x)	TUN-VIPER-TX-DATA14
B05c (1x)	TUN-VIPER-TX-DATA14
B04c (1x)	TUN-VIPER-TX-DATA15
B05c (1x)	TUN-VIPER-TX-DATA15
B04c (1x)	TUN-VIPER-TX-DATA2
B05c (1x)	TUN-VIPER-TX-DATA2
B04c (1x)	TUN-VIPER-TX-DATA3
B05c (1x)	TUN-VIPER-TX-DATA3
B04c (1x)	TUN-VIPER-TX-DATA4
B05c (1x)	TUN-VIPER-TX-DATA4
B04c (1x)	TUN-VIPER-TX-DATA5
B05c (1x)	TUN-VIPER-TX-DATA5
B04c (1x)	TUN-VIPER-TX-DATA6
B05c (1x)	TUN-VIPER-TX-DATA6
B04c (1x)	TUN-VIPER-TX-DATA7
B05c (1x)	TUN-VIPER-TX-DATA7
B04c (1x)	TUN-VIPER-TX-DATA8
B05c (1x)	TUN-VIPER-TX-DATA8
B04c (1x)	TUN-VIPER-TX-DATA9
B05c (1x)	TUN-VIPER-TX-DATA9
B01b (1x)	TXD
B05e (1x)	TXD
B07d (1x)	TXD
B04e (1x)	TXD-UP
B05e (1x)	TXD-UP
B05a (1x)	TXD-VIPER
B05e (1x)	TXD-VIPER
B04b (1x)	TXPNXA-
B04g (1x)	TXPNXA-
B04b (1x)	TXPNXA+
B04g (1x)	TXPNXA+
B04b (1x)	TXPNXB-
B04g (1x)	TXPNXB-
B04b (1x)	TXPNXB+
B04g (1x)	TXPNXB+
B04b (1x)	TXPNXC-
B04g (1x)	TXPNXC-
B04b (1x)	TXPNXC+
B04g (1x)	TXPNXC+
B04b (1x)	TXPNXCLK-
B04g (1x)	TXPNXCLK-
B04b (1x)	TXPNXCLK+
B04g (1x)	TXPNXCLK+
B04b (1x)	TXPNXD-
B04g (1x)	TXPNXD-
B04b (1x)	TXPNXD+
B04g (1x)	TXPNXD+
B04b (1x)	TXPNXE-
B04g (1x)	TXPNXE-
B04b (1x)	TXPNXE+
B04g (1x)	TXPNXE+
B04e (2x)	UART-SWITCH
B05e (1x)	UART-SWITCH
B05e (2x)	UART-SWITCHn
B04f (2x)	UP-3V3
B05a (2x)	USB1-DM
B05a (2x)	USB1-DP
B05a (3x)	USB-BUS-PW
B05a (3x)	USB-OVERCUR
B08a (3x)	U-VOLT-DETECT
B03a (1x)	V_SYNC_IN
B04g (2x)	VDISP
B08a (4x)	VN
B08a (4x)	VP
B03b (1x)	VREF-AUD
B03e (1x)	VREF-AUD
B03b (2x)	VREF-AUD-POS
B04a (28x)	VREF-AUD-POS
B04d (3x)	VREF-DDRPNX
B05b (2x)	VREFD-VPRDDR
B04c (2x)	VREF-PNX
B05c (1x)	VREF-PNX
B05b (2x)	VREF-VPRDDR
B07b (1x)	V-SYNC-VGA
B07b (2x)	Y
B07c (1x)	Y
B07b (2x)	Y1
B07c (1x)	Y1

3104 313 6095.3 & 4

G_16290_097.eps
150206

Layout SSB (Top Side Overview)

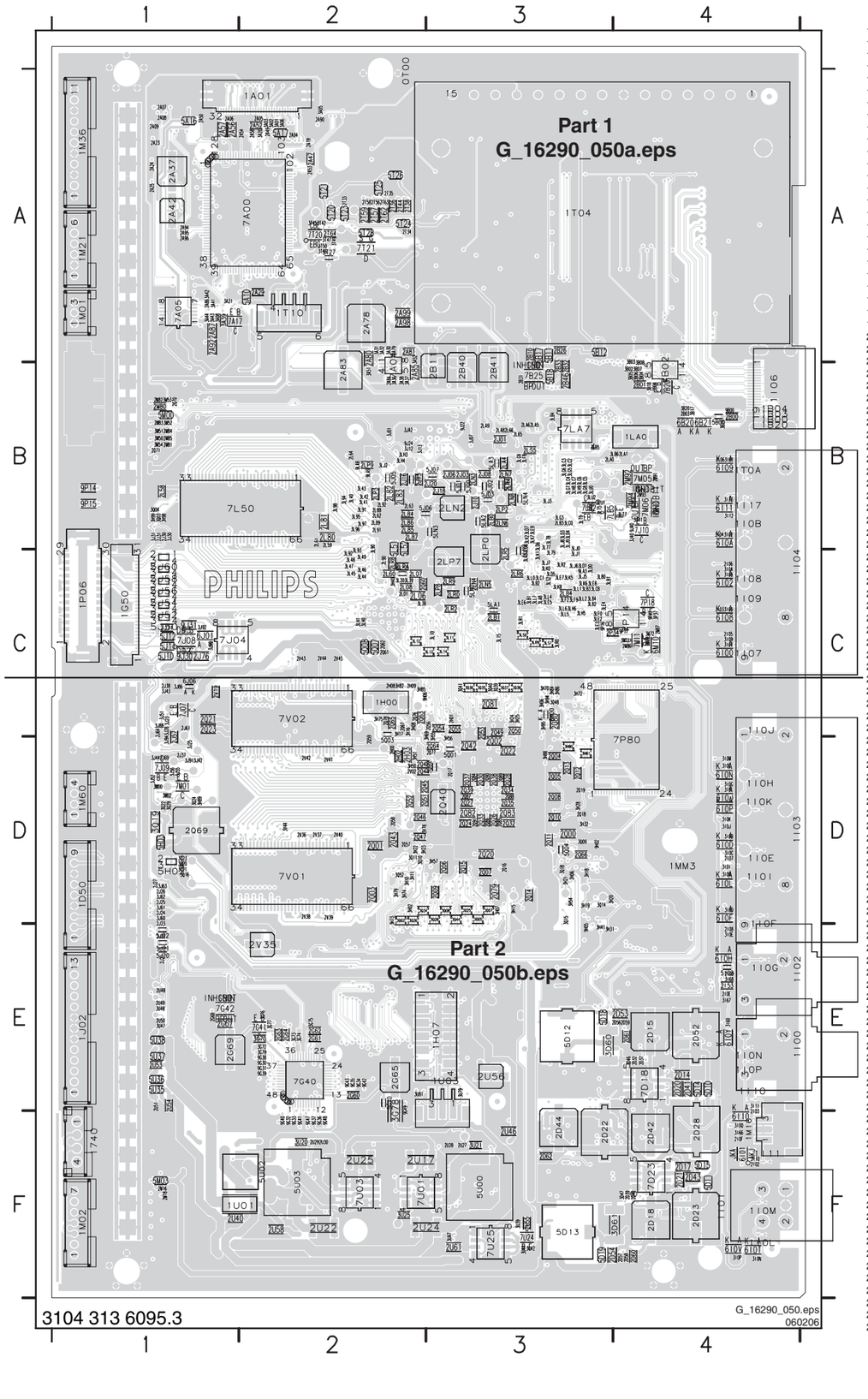

1740 F1
1A01 A2
1D50 D1
1G50 C1
1H00 C2
1H07 E3
1I00 E4
1I01 F4
1I02 E4
1I03 C4
1I04 C4
1I06 B4
1J02 E1
1LA0 B4
1M01 A1
1M02 F1
1M16 F4
1M21 A1
1M36 A1
1M60 D1
1P06 C1
1T04 A2
1T10 A2
1U01 F1
1U03 F3
2A04 A2
2A05 A2
2A06 A1
2A07 A1
2A08 A1
2A09 A1
2A19 A2
2A23 A1
2A24 A1
2A25 A1
2A29 A2
2A37 A1
2A42 A1
2A47 A2
2A49 A2
2A50 A1
2A52 A2
2A53 A2
2A54 A2
2A56 A1
2A57 A1
2A58 A2
2A78 A2
2A79 A2
2A80 A2
2A81 A2
2A83 B2
2A84 B2
2A85 B2
2A86 A1
2A87 A1
2A90 A2
2A92 A1
2A94 A1
2A95 A1
2A96 A1
2A98 A2
2A99 A2
2B00 B4
2B01 B4
2B03 B4
2B04 B4
2B10 A3
2B11 B2
2B26 A3
2B31 B3
2B32 B3
2B33 B3
2B40 B3
2B41 B3
2B46 B3
2D14 E4
2D15 E4
2D17 F4
2D18 F4
2D20 E4
2D21 F4
2D22 E3
2D23 F4
2D28 E4
2D32 E4
2D37 E4
2D39 F4
2D40 F4
2D41 E4
2D42 E4
2D43 F4
2D44 F3
2D52 E4
2D53 E4
2D54 F3
2D56 E4
2D57 F4
2D58 F4
2D59 E4
2D60 F4
2D61 E4
2D62 F3
2G60 E2
2G61 E2
2G62 E2
2G63 E2
2G64 E2
2G65 E2
2G67 E1
2G68 E1
2G69 E2
2H00 D2
2H01 C3
2H02 D2
2H03 D2
2H06 D3
2H08 C2
2H09 C2
2I02 F4
2I03 F4
2I05 C4
2I06 C4
2I07 D4
2I08 E4
2I09 E4
2I0E E4
2I0F F4
2I53 E4
2J01 B3
2J03 B3
2J06 B3
2J08 B3
2J10 B3
2J13 B2
2J16 B2
2J18 B3
2J20 B3
2J21 E1
2J22 E1
2J23 D1
2J24 D1
2J25 D1
2J26 D1
2J27 D1
2J30 B1
2J31 B1
2J37 D1
2J38 C1
2J57 D1
2J61 C1
2J64 C1
2J69 D1
2J71 C1
2J76 C1
2L01 C2
2L06 C2
2L07 C2
2L08 C2
2L58 B1
2L59 B2
2L60 C2
2L61 B2
2L62 B2
2L63 B2
2L64 B2
2L65 B3
2L66 B3
2L80 B2
2L81 B2
2L82 B2
2L83 B2
2L84 B2
2L85 B2
2L86 B2
2L87 B2
2L88 B2
2L89 B2
2L90 C2
2L91 B2
2L92 B2
2LA0 B3
2LA1 B4
2LA4 B3
2LA5 B3
2LA6 B3
2LA8 B3
2LA9 B3
2LB0 B3
2LB1 C3
2LB3 B3
2LB4 C3
2LN2 B2
2LN3 B3
2LN4 C3
2LN5 C3
2LN6 B3
2LN7 B3
2LN8 B3
2LP0 B3
2LP2 B3
2LP3 B2
2LP4 C2
2LP7 C2
2LP9 B2
2LR0 C3
2LR2 C3
2LR4 B3
2LR5 C3
2LS5 B3
2M16 F1
2M18 F1
2M80 B1
2M81 B1
2M82 B1
2M83 B1
2M84 B1
2M85 B1
2M86 C4
2M87 C4
2M91 B4
2M92 B4
2M93 B4
2M94 B4
2P34 C3
2Q00 D3
2Q01 D2
2Q02 D3
2Q03 D2
2Q04 D3
2Q05 D3
2Q06 D3
2Q07 D3
2Q08 D3
2Q09 D3
2Q10 D3
2Q11 D3
2Q12 D3
2Q13 D3
2Q14 D3
2Q15 D3
2Q16 D3
2Q17 D3
2Q18 D3
2Q19 D3
2Q20 D3
2Q21 C1
2Q22 D3
2Q23 C1
2Q24 D3
2Q26 D3
2Q27 D3
2Q28 D3
2Q30 D3
2Q32 D3
2Q33 D3
2Q34 D3
2Q35 D3
2Q37 D3
2Q38 D3
2Q39 D3
2Q40 D3
2Q42 D3
2Q43 D2
2Q44 D2
2Q46 D2
2Q47 D2
2Q48 D2
2Q49 C3
2Q50 C3
2Q51 D2
2Q52 D2
2Q53 C3
2Q54 C3
2Q55 C3
2Q56 C3
2Q57 D2
2Q58 D2
2Q59 D2
2Q60 C2
2Q61 C2
2Q62 C2
2Q63 C2
2Q64 D3
2Q65 C2
2Q69 D1
2Q70 B1
2Q71 B1
2Q76 C2
2Q77 D3
2Q78 C2
2Q79 D3
2Q80 C3
2Q81 C3
2Q82 D3
2Q83 D3
2Q84 D3
2Q85 D3
2Q86 D3
2Q87 D3
2Q88 D3
2Q89 D3
2Q90 D3
2Q91 D3
2T33 A2
2T34 A2
2T35 A2
2T36 A2
2T38 A2
2T44 A2
2T56 A2
2T57 A2
2T58 A2
2T59 A2
2T62 A2
2U17 F2
2U22 F2
2U24 F3
2U25 F2
2U27 F3
2U28 F3
2U29 F2
2U30 F2
2U40 F1
2U46 F3
2U48 E1
2U49 E1
2U50 E1
2U51 E1
2U53 E1
2U54 E1
2U55 F3
2U56 E3
2U58 F2
2U61 F3
2V02 D2
2V19 C1
2V35 E2
2V36 D2
2V37 D2
2V38 D2
2V39 D2
2V40 D2
2V41 D2
2V42 D2
2V43 C2
2V44 C2
2V45 C2
3A01 A2
3A02 A2
3A03 A2
3A05 A2
3A06 A2
3A08 A1
3A20 A2
3A21 A1
3A30 A2
3A31 A2
3A32 A2
3A36 B2
3A37 B2
3A38 B2
3A39 A1
3A41 A1
3A42 A1
3A43 A1
3A44 A1
3A51 B2
3A52 A2
3B02 B4
3B03 A4
3B04 B4
3B05 B4
3B06 B4
3B07 B4
3B08 B4
3B17 B4
3B18 B4
3B19 B4
3B20 B4
3D46 E4
3D47 F4
3D60 E3
3D61 F3
3G70 E2
3G72 E2
3G73 E2
3G74 E2
3G75 E2
3G76 E2
3G77 E2
3G78 F2
3G79 E2
3H02 D2
3H06 C3
3H07 D3
3H08 C2
3H10 D2
3H11 D2
3H16 C2
3H17 C2
3H18 D3
3H19 D3
3H20 D3
3H21 D3
3H22 D2
3H23 D2
3H24 C3
3H25 C3
3H28 D3
3H31 E3
3H32 D3
3H40 C2
3H41 E3
3H50 D2
3H51 D2
3H54 D3
3H55 D3
3H56 D3
3H57 D3
3H69 C3
3H70 C3
3H72 C3
3H73 D2
3H74 D2
3H75 C2
3H79 D2
3H80 D3
3H81 D3
3H82 C2
3H84 C3
3H85 C2
3H86 C3
3H88 D3
3H89 D1
3H94 C3
3H95 C3
3H98 B1
3H99 B1
3I00 C4
3I01 B4
3I02 B4
3I03 C4
3I04 B4
3I06 B4
3I07 C4
3I08 C4
3I09 C4
3I0A C4
3I0B D4
3I0C D4
3I0D D4
3I0E E4
3I0F D4
3I0G D4
3I0H D4
3I0I D4
3I0J D4
3I0K D4
3I0L D4
3I0M D4
3I0N F4
3I0P F4
3I0Q F4
3I10 F4
3I11 E4
3I12 B4
3I13 B4
3I60 E4
3I66 F4
3I67 E4
3I68 E4
3J01 B2
3J03 B3
3J07 B3
3J08 B3
3J11 B2
3J12 B2
3J13 B2
3J23 C1
3J25 D1
3J28 C1
3J30 B1
3J31 B1
3J40 B4
3J41 B4
3J42 D1
3J43 C1
3J44 D1
3J51 C1
3J55 D1
3J56 D1
3J60 D1
3J61 D1
3J62 D1
3J63 D1
3J86 C1
3J88 C1
3J91 D1
3J92 C1
3J94 D1
3J99 C1
3JA2 B2
3L10 C3
3L11 C3
3L12 C2
3L13 C3
3L14 C3
3L15 C3
3L20 C2
3L38 C2
3L39 C2
3L40 B2
3L41 B2
3L42 B2
3L43 B2
3L44 C2
3L45 C2
3L46 C2
3L47 C2
3L48 C2
3L49 C2
3L77 B3
3L78 B3
3L79 C3
3L80 C3
3L81 C3
3L82 C3
3L84 C3
3L90 B2
3L91 B2
3L92 C2
3L93 C2
3L94 B2
3L95 B2
3L96 B2
3L97 B2
3L98 B2
3LA8 C3
3LB1 C3
3LB2 C3
3LB3 C3
3LB4 B3
3LB5 B3
3LB6 B4
3LC0 B3
3LC1 C3
3LC2 B3
3LC3 B3
3LC4 B3
3LC5 B3
3LC6 B3
3LC7 B3
3LC8 C3
3LD0 C3
3LD1 C3
3LD3 B3
3LD4 B3
3LD5 C3
3LD6 B3
3LD7 B3
3LD8 B3
3LE2 C3
3LE3 C3
3LE4 C3
3LE5 C3
3LE6 C3
3LE7 C3
3LE8 C3
3LE9 B3
3LF0 C3
3LF2 C3
3LF8 B3
3LF9 C3
3LG3 B3
3LG5 B3
3LG6 B3
3LG7 B3
3LG8 B3
3LG9 B3
3LH0 C2
3LH1 C2
3LH3 B2
3LH4 B2
3LH5 C3
3LH6 C3
3LH8 B3
3LH9 B3
3LJ1 C3
3LJ2 B2
3LJ3 B3
3LJ5 C3
3LJ6 C3
3LJ8 B3
3LJ9 B3
3LK0 C3
3LK1 C3
3LK2 B3
3LK3 C3
3LK5 C3
3LK6 C3
3LK7 B3
3LK8 C3
3LL0 C3
3LL1 C3
3LL2 C3
3LL4 C3
3LL5 C3
3LL6 C3
3LL7 C3
3LR0 C3
3LR1 C3
3LR2 C3
3LR9 C3
3LS0 C3
3LS1 C3
3LS2 C3
3LT5 B3
3LT7 B4
3LT9 B3
3LU0 B3
3LU1 B3
3LU2 B3
3LH4 B2
3M00 D1
3M02 D1
3M50 B1
3M51 B1
3M52 B1
3M53 B1
3M54 B1
3M71 C4
3M72 C4
3P37 C4
3Q02 D2
3Q03 B1
3Q04 B1
3Q05 D3
3Q07 D3
3Q08 D3
3Q09 D3
3Q10 D2
3Q11 D2
3Q14 D3
3Q15 D3
3Q16 D1
3Q18 D3
3Q19 D1
3Q20 D1
3Q21 D1
3Q22 D1
3Q23 D1
3Q24 D1
3Q25 D3
3Q26 D2
3Q28 D3
3Q29 D1
3Q34 D2
3Q35 C3
3Q36 C3
3Q37 C3
3Q38 C3
3Q39 C3
3Q40 C3
3Q41 C3
3Q44 D3
3Q48 C3
3Q52 D2
3T42 A2
3T45 A2
3T46 A2
3T47 A2
3T49 A2
3T50 A2
3U20 F2
3U21 F3
3U25 F2
3U39 F3
3U42 F3
3U44 F3
3U47 E1
3U48 E1
3U79 E3
3U81 E2
3UA7 F3
3V44 D2
3V78 D2
5A10 A2
5A16 A1
5A17 A2
5B00 B4
5B11 A3
5B12 A3
5B17 A3
5B18 B3
5D10 E4
5D11 F4
5D12 E3
5D13 F3
5G10 E2
5H02 D1
5H03 D1
5I02 E4
5J00 B3
5J01 B3
5J02 B3
5J03 B3
5J04 B2
5J05 B2
5J06 B2
5J07 B3
5J08 B3
5J09 B3
5J10 C1
5J11 C1
5J12 C1
5J20 E1
5J21 E1
5J22 E1
5J50 C1
5J51 B2
5J52 B2
5J53 B2
5J54 C1
5J56 C1
5J58 C1
5J60 C1
5L50 C2
5L51 B2
5L52 B2
5LA1 C3
5LA2 B3
5LA3 B3
5LN0 C3
5LN1 B3
5LN2 C3
5LN3 B3
5LN4 B3
5M00 B1
5M03 F1
5Q01 D3
5Q02 D3
5Q03 D2
5Q04 D3
5Q07 C2
5Q08 C2
5T20 A2
5T21 A2
5T23 A2
5T24 A2
5T25 A2
5T26 A2
5T27 A2
5T28 A2
5U00 F3
5U02 F1
5U03 F2
5U35 E1
5U36 E1
5U37 E1
5U38 E1
6B20 B4
6B21 B4
6H00 C3
6I00 C4
6I01 F4
6I02 C4
6I08 C4
6I09 B4
6I0A B4
6I0D D4
6I0F D4
6I0H E4
6I0J D4
6I0L D4
6I0N D4
6I0P D4
6I0T F4
6I0V F4
6I0Y E4
6I10 E4
6I11 B4
6J01 C1
6J06 C1
6M10 C4
7A00 A2
7A04 B2
7A05 A1
7A17 A2
7B02 B4
7B20 B4
7B25 B3
7D18 E4
7D23 F4
7G40 E2
7G42 E2
7LA7 B3
7LB2 B3
7LB5 B3
7M01 D1
7M05 B4
7M06 B4
7M11 C4
7P14 C4
7P18 C4
7P80 C4
7T20 A2
7T21 A2
7U01 F2
7V01 D1
7V02 C2
9B00 B4
9G30 E2
9G31 E2
9G32 F2
9G33 F2
9G34 E2
9G35 E2
9G36 F2
9G37 F2
9G38 E2
9G39 E2
9G40 F2
9G41 F2
9G42 E2
9G43 E2
9G47 F2
9G48 F2
9G49 E2
9H02 D3
9H05 E3
9H06 C2
9H15 D3
9J22 B3
9J24 B2
9J30 C1
9J31 C1
9J40 B4
9LA3 C3
9LA8 B2
9LA9 B2
9M09 C4
9P14 B1
9P15 B1
9P16 C3
9P17 C4
9P42 C4

Layout SSB (Top Side Part 1)

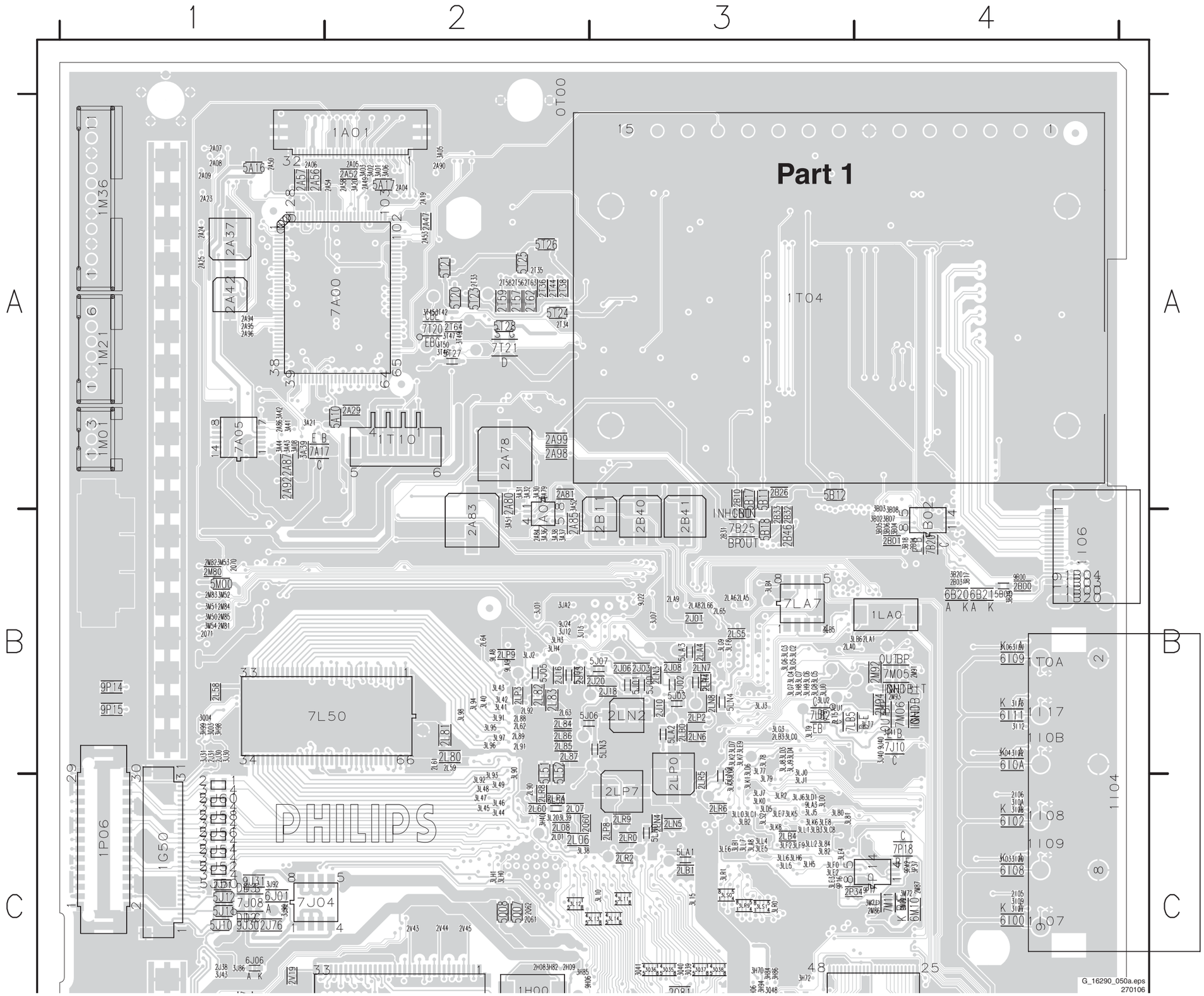

Layout SSB (Top Side Part 2)

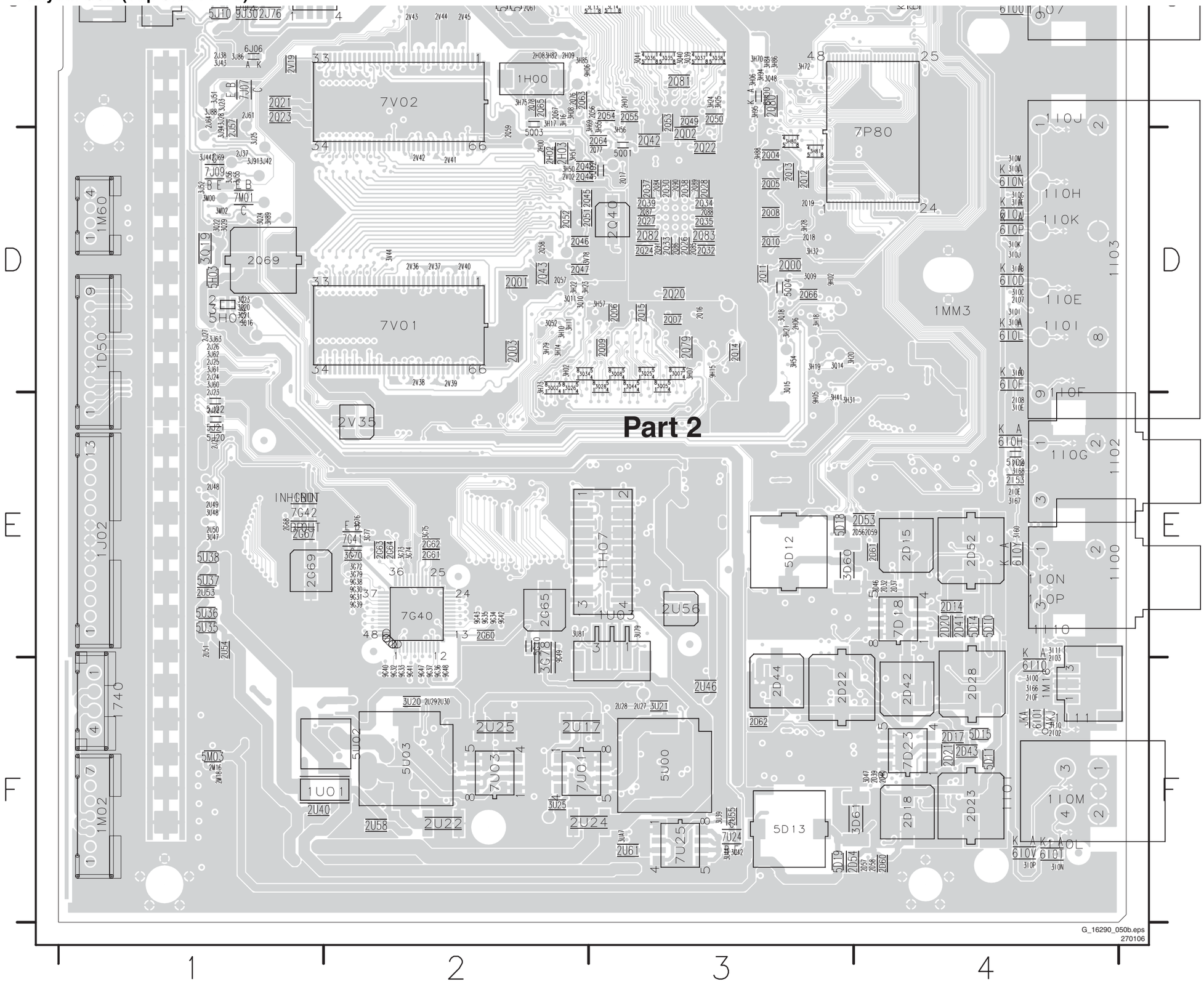

Layout SSB (Overview Bottom Side)

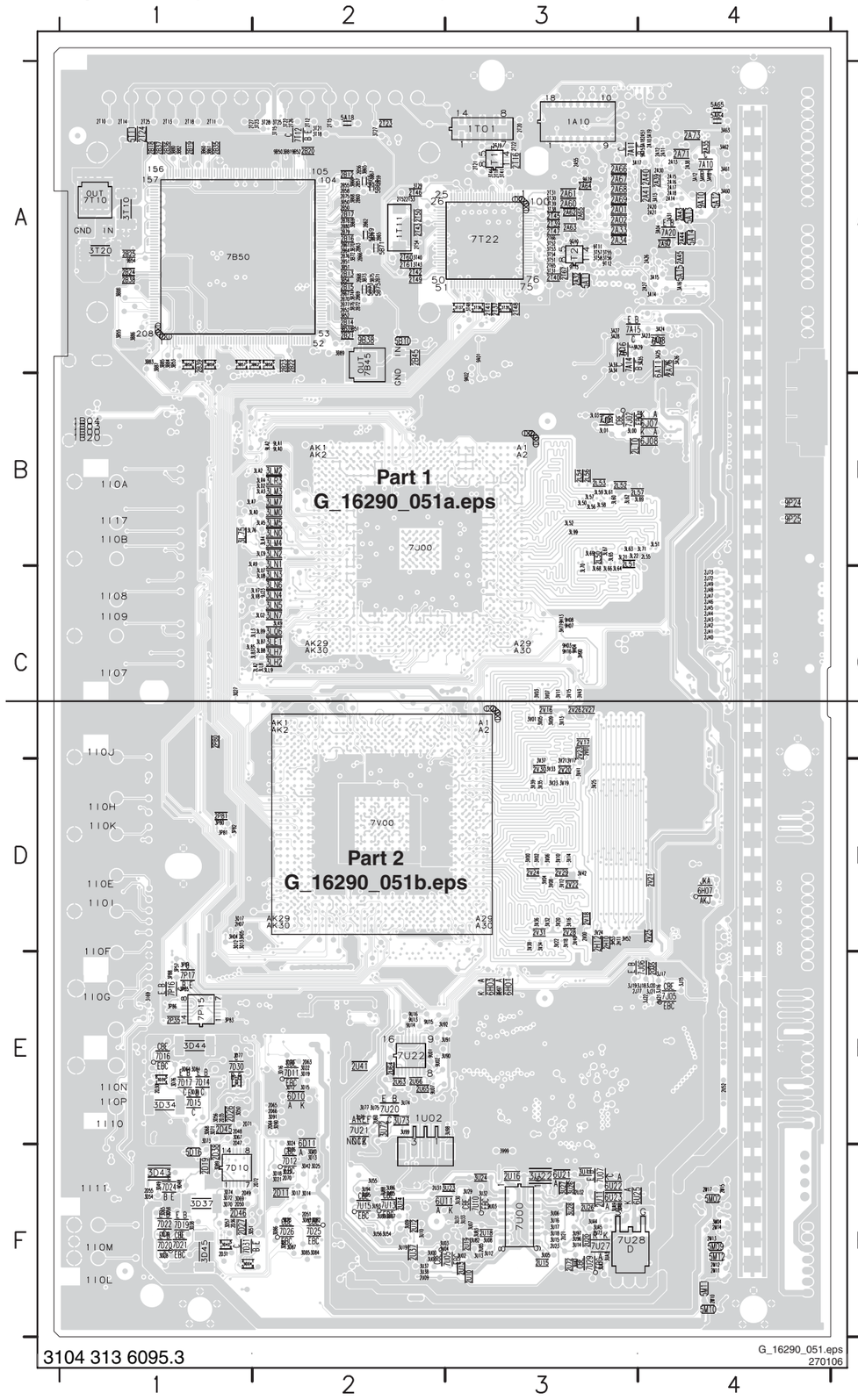

1A10 A3	2D50 F1	2U64 E2	3D45 F1	3LN2 B2	3U93 F2	7D26 F2
1T01 A3	2D51 F2	2U65 E2	3D49 F1	3LN3 C2	3U94 F2	7D30 E2
1T11 A2	2D55 F1	2U66 E2	3D50 E1	3LN4 C2	3U95 F2	7D31 F2
1U02 E2	2D63 E2	2U72 F3	3D51 F1	3LN5 C2	3U96 F3	7J00 C2
2A01 A3	2D64 E2	2U73 F3	3D54 F1	3LN6 C2	3U97 F3	7J01 B3
2A02 A3	2D65 E2	2U85 F3	3D56 E1	3LN7 C2	3U98 E3	7J02 B3
2A10 A4	2D66 E2	2V00 D3	3D57 F1	3LQ6 C2	3U99 E2	7J05 E4
2A11 A4	2D70 F2	2V01 C3	3D58 F1	3LR3 B2	3UA1 F3	7J06 E3
2A12 A4	2D71 E1	2V16 C3	3D64 E1	3LR4 B2	3UA2 F3	7P15 E1
2A13 A4	2D72 F2	2V17 C3	3D65 F1	3LU7 C2	3UA3 F3	7P16 E1
2A14 A4	2G35 E4	2V18 D3	3D67 E1	3LU8 C2	3UA4 F3	7P17 E1
2A15 A4	2H07 D1	2V20 D3	3D68 E1	3LV7 C2	3UA5 F3	7T10 A1
2A16 A4	2H10 D3	2V21 D4	3D69 F1	3LV8 C2	3UA8 F3	7T12 A2
2A17 A4	2H11 D3	2V22 D3	3D70 F1	3M04 F4	3UA9 F3	7T13 A3
2A18 A4	2H12 D3	2V23 C3	3D71 E1	3P57 E1	3V00 D3	7T22 A3
2A20 A4	2J40 C4	2V24 D3	3D72 F1	3P80 D1	3V01 C3	7T23 A3
2A21 A4	2J41 C4	2V25 D4	3D73 E1	3P81 D1	3V02 D3	7U00 F3
2A26 A4	2J42 C4	2V26 C3	3D74 F1	3P82 D1	3V03 C3	7U05 F3
2A27 A4	2J43 C4	2V27 C3	3D75 F2	3P83 E1	3V04 D3	7U07 F3
2A30 A4	2J44 C4	2V28 D3	3D76 E1	3P84 E1	3V05 C3	7U10 F3
2A31 A4	2J45 C4	2V29 D3	3D77 E1	3P85 E1	3V06 D3	7U13 F2
2A32 A3	2J46 C4	2V30 D3	3D78 F1	3P86 E1	3V07 C3	7U15 F2
2A33 A3	2J47 C4	2V31 D3	3D79 F1	3P88 E1	3V08 D3	7U20 E2
2A34 A3	2J48 C4	3999 F3	3D81 E1	3Q12 D1	3V09 C3	7U21 E2
2A35 A4	2J49 C4	3A04 A4	3D82 F2	3Q13 D1	3V10 D3	7U22 E2
2A38 A4	2J72 C4	3A10 A4	3D83 F2	3Q17 D1	3V11 C3	7U27 F3
2A39 A4	2J73 C4	3A11 A4	3D84 F2	3Q27 C1	3V12 D3	7U28 F4
2A40 A4	2J77 E3	3A12 A4	3D85 F2	3T10 A1	3V13 C3	7U29 F3
2A41 A4	2L50 B3	3A13 A4	3D86 F2	3T15 A2	3V14 D3	7V00 D2
2A43 A4	2L51 B3	3A14 A4	3D87 F2	3T18 A2	3V15 C3	9A01 A3
2A44 A4	2L52 B3	3A15 A4	3D88 F2	3T20 A1	3V16 D3	9A02 B3
2A45 A4	2L53 B3	3A16 A4	3D89 F1	3T21 A2	3V17 D3	9A10 A4
2A51 A4	2L54 B3	3A17 A3	3D90 E2	3T22 A2	3V18 D3	9A15 A4
2A55 A3	2L55 B4	3A18 A4	3D91 E2	3T23 A2	3V19 D3	9A19 A3
2A60 A3	2L56 B3	3A19 A4	3H04 D1	3T25 A2	3V20 D3	9B38 A2
2A61 A3	2L57 B3	3A23 A4	3H05 D1	3T27 A2	3V21 D3	9B50 A2
2A62 A3	2LA2 C2	3A24 A4	3H52 D3	3T28 A2	3V22 D3	9B51 A2
2A63 A3	2LT0 B3	3A25 A4	3H53 D3	3T29 A2	3V23 D3	9B52 A2
2A64 A3	2M10 F4	3A26 A4	3H71 C3	3T31 A3	3V24 D3	9B53 A2
2A65 A3	2M11 F4	3A27 A3	3H90 C3	3T35 A3	3V25 D3	9B54 A1
2A66 A3	2M12 F4	3A28 A3	3H97 E3	3T36 A3	3V32 D3	9D03 E1
2A67 A3	2M13 F4	3A29 A3	3I69 E1	3T37 A3	3V33 D3	9D04 F1
2A68 A3	2M14 F4	3A33 A3	3J15 E4	3T38 A3	3V34 D3	9D48 F1
2A69 A3	2M15 F4	3A34 A3	3J16 E4	3T39 A3	3V35 D3	9H03 C3
2A71 A4	2M17 F4	3A35 A4	3J17 E4	3T40 A2	3V36 D3	9H04 C3
2A73 A4	2P35 E1	3A60 A4	3J18 E4	3T41 A3	3V37 D3	9H07 C3
2A76 A4	2P80 C1	3A61 A4	3J19 E3	3T43 A2	3V38 D3	9H08 C3
2A97 A4	2P81 D1	3A62 A4	3J20 E4	3T44 A3	3V39 D3	9H13 C3
2B12 A2	2T10 A1	3A63 A4	3J21 E4	3T48 A3	3V40 D3	9H16 C3
2B13 A2	2T11 A1	3B50 A2	3J22 E4	3T51 A3	3V41 D3	9J21 E4
2B14 A2	2T12 A2	3B51 A2	3L00 B3	3T52 A3	3V42 D3	9J23 C2
2B15 A2	2T13 A1	3B52 A2	3L01 B3	3T53 A3	3V43 C3	9LA0 B2
2B16 A2	2T14 A1	3B53 A1	3L02 B4	3T54 A3	5A11 A3	9LA1 B2
2B17 A2	2T15 A2	3B54 A2	3L03 B3	3T55 A3	5A12 A4	9LA2 B2
2B18 A1	2T16 A3	3B55 A1	3L21 B3	3T56 A3	5A13 A4	9P24 B4
2B19 A1	2T17 A3	3B56 A1	3L22 B3	3T57 A3	5A14 A4	9P25 B4
2B20 A2	2T18 A1	3B57 A1	3L50 B3	3T58 A3	5A15 A4	9T10 A3
2B21 A2	2T19 A3	3B58 A2	3L51 B4	3U00 F2	5A18 A2	9T11 A3
2B22 A2	2T20 A3	3B59 A1	3L52 B3	3U01 F2	5A64 A4	9T12 A3
2B23 A2	2T21 A3	3B60 A1	3L56 B3	3U02 F3	5A65 A4	9T13 A3
2B24 A1	2T22 A3	3B61 A1	3L57 B3	3U03 F2	5B10 A2	9U01 E2
2B25 A1	2T23 A2	3B62 A2	3L58 B3	3U04 F2	5B65 A2	9U02 E2
2B35 A1	2T24 A1	3B65 A2	3L59 B3	3U05 F3	5B67 A2	9U03 F3
2B36 A1	2T25 A1	3B66 A2	3L60 B3	3U06 F3	5B69 A2	9U07 E2
2B37 A1	2T26 A2	3B67 A2	3L61 B3	3U07 F3	5B71 A2	9U13 E2
2B38 A1	2T27 A1	3B68 A2	3L62 B3	3U08 F3	5B73 A2	9U14 E2
2B39 A1	2T30 A3	3B69 A2	3L63 B3	3U09 F2	5B75 A2	9U15 E2
2B45 A2	2T31 A3	3B70 A2	3L64 C3	3U10 F2	5D16 F1	9U16 E2
2B50 A2	2T37 A3	3B71 A2	3L65 B3	3U11 F3	5M02 F4	
2B51 A2	2T39 A3	3B72 A2	3L66 C3	3U12 F3	5M09 F4	
2B52 A2	2T40 A3	3B73 A2	3L67 B3	3U13 F3	5M10 F4	
2B55 A2	2T41 A3	3B74 A2	3L68 C3	3U14 F3	5M11 F4	
2B56 A2	2T42 A2	3B75 A2	3L69 B3	3U15 F3	5M12 F4	
2B57 A2	2T43 A2	3B76 A2	3L70 C3	3U16 F3	5T11 A1	
2B58 A2	2T45 A3	3B80 A1	3L71 B4	3U17 F3	6A11 A4	
2B59 A2	2T46 A2	3B81 A2	3L75 B1	3U18 F3	6D10 E2	
2B60 A2	2T47 A3	3B82 A1	3L76 B1	3U19 F2	6D11 E2	
2B61 A2	2T48 A3	3B83 A1	3L83 C2	3U22 F3	6H01 E3	
2B62 A2	2T49 A2	3B84 A1	3L85 C1	3U23 F3	6H03 E3	
2B63 A2	2T50 A2	3B85 A1	3L89 B4	3U24 F3	6H07 D4	
2B64 A2	2T52 A2	3B86 A1	3L99 B3	3U26 F3	6J07 B4	
2B65 A2	2T53 A2	3B87 A1	3LA0 B2	3U27 F3	6J08 B4	
2B66 A2	2T54 A2	3B88 A1	3LA2 B2	3U28 F3	6U11 F2	
2B67 A2	2T60 A2	3B89 A2	3LA3 B2	3U29 F3	6U21 F3	
2B68 A2	2T61 A2	3D10 F2	3LA4 B2	3U30 F3	6U22 F3	
2B69 A2	2T65 A3	3D12 E2	3LA5 B2	3U31 F3	6U23 F3	
2B70 A2	2T66 A3	3D13 F2	3LA7 B1	3U32 F3	6U25 F4	
2B71 A2	2T67 A3	3D14 F2	3LA9 B2	3U33 F3	7A08 A4	
2B72 A2	2U09 F2	3D15 E2	3LB7 C2	3U37 F2	7A10 A4	
2B75 A2	2U10 F3	3D16 E2	3LB8 C2	3U38 F2	7A11 A3	
2B76 A2	2U11 F3	3D17 F2	3LB9 C2	3U54 F2	7A14 A3	
2B77 A2	2U12 F2	3D18 F2	3LC9 B2	3U55 F2	7A15 A3	
2B78 A2	2U13 F3	3D19 E2	3LD2 B2	3U56 F2	7A16 A3	
2B79 A2	2U14 F2	3D20 E2	3LE1 C2	3U72 E2	7A20 A4	
2B80 A2	2U15 F3	3D21 F2	3LG2 C2	3U73 E2	7B45 A2	
2D11 F2	2U16 F3	3D22 E2	3LH2 C2	3U74 E2	7B50 A1	
2D19 F1	2U18 F3	3D23 F2	3LH7 C2	3U75 E2	7D10 F2	
2D26 E1	2U19 F3	3D24 E2	3LK9 C2	3U76 E2	7D11 E2	
2D27 F1	2U20 F3	3D25 F2	3LL3 C2	3U77 E2	7D12 F2	
2D30 E1	2U21 F3	3D26 F2	3LL8 C2	3U82 F3	7D14 E1	
2D31 F1	2U23 F3	3D34 E1	3LL9 C2	3U83 F3	7D15 E1	
2D35 E1	2U26 F3	3D35 E1	3LM0 B2	3U85 F2	7D16 E1	
2D36 F1	2U31 F2	3D37 F1	3LM2 B2	3U86 F2	7D17 E1	
2D38 F1	2U32 F3	3D38 F1	3LM3 B2	3U87 F2	7D19 F1	
2D45 E1	2U37 F2	3D39 E1	3LM4 B2	3U88 F2	7D20 F1	
2D46 F1	2U41 E2	3D40 F1	3LM5 B2	3U89 F2	7D21 F1	
2D47 E1	2U52 E4	3D42 F2	3LM7 B2	3U90 E3	7D22 F1	
2D48 E1	2U60 E2	3D43 F1	3LN0 B2	3U91 E3	7D24 F1	
2D49 F1	2U63 E2	3D44 E1	3LN1 B2	3U92 E2	7D25 F2	

Layout SSB (Bottom Side Part 1)

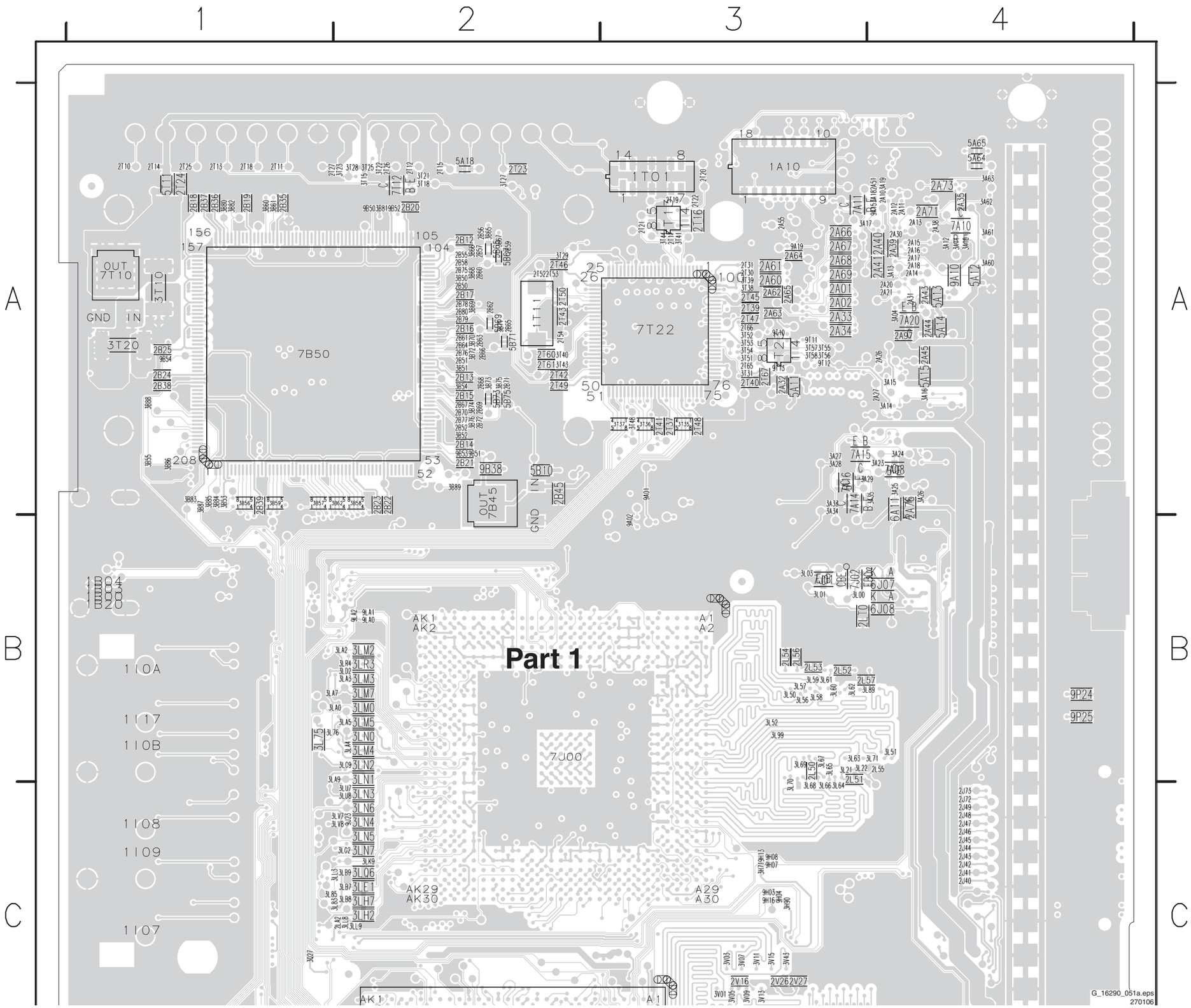

Layout SSB (Bottom Side Part 2)

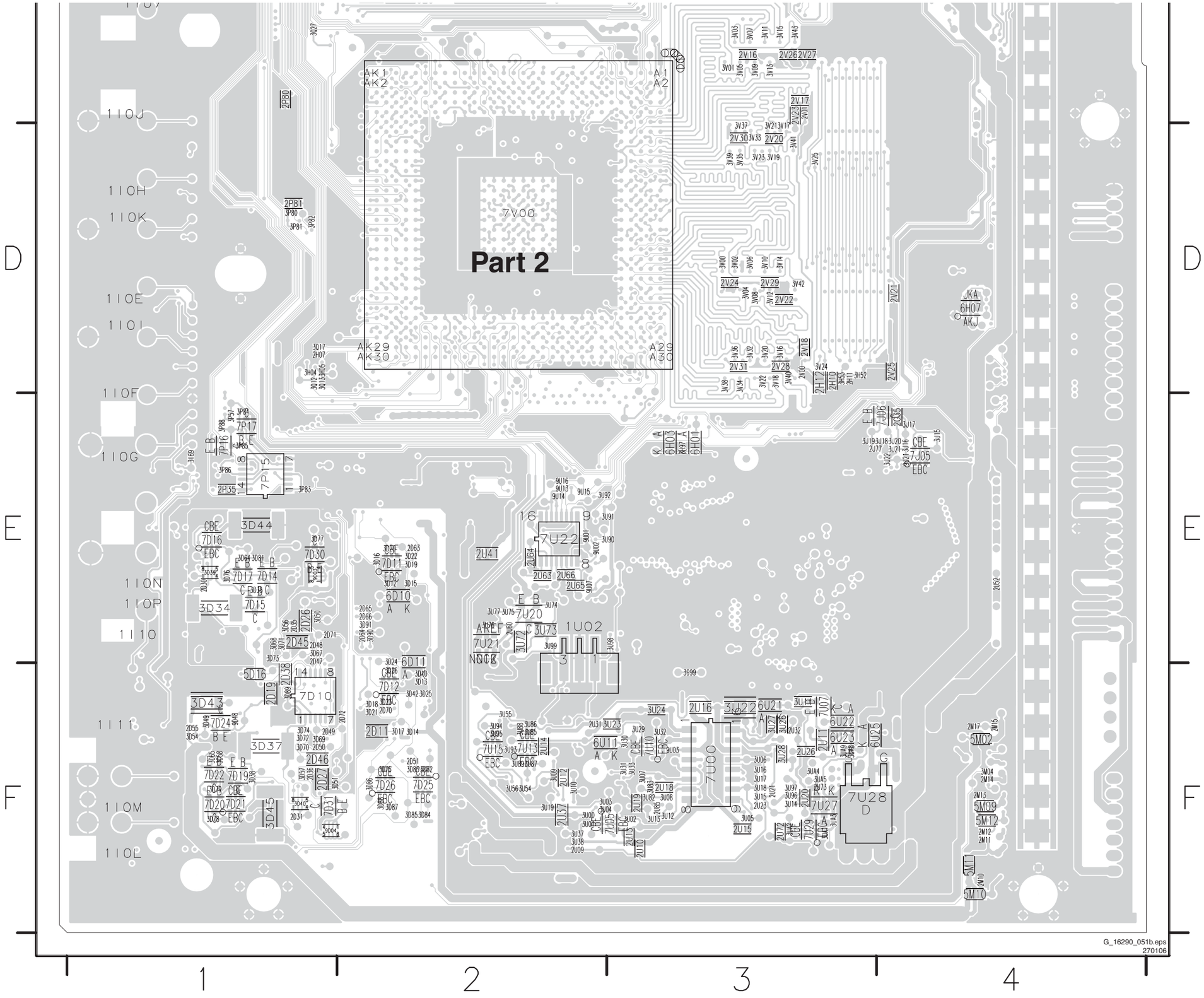

G_16290_051b.eps
270106

SSB: DC / DC

0M96 H3	2U13 C2	2U20 D9	2U27 B8	2U41 E11	3U00 C2	3U07 C6	3U14 D9	3U21 B8	3U28 B6	3U35 B4	3U83 C7	3U94 D11	3UA4 D14	5U03 C9	7U00 B5	7U07 E7	7U27 C13	FU03 A8	FU19 F12	IU07 B4	IU14 C6	IU21 B8	IU28 E8	IU37 E5	IU55 D8	IU62 A3	IU80 D12
0M97 H4	2U14 A3	2U21 D9	2U28 B8	2U46 E13	3U01 C2	3U08 C6	3U15 E9	3U22 A5	3U29 D5	3U37 G2	3U85 A3	3U95 E11	3UA5 D13	6U11 E5	7U01-1 A6	7U10-1 D4	7U28 D12	FU05 E13	FU23 A4	IU08 C4	IU15 C6	IU22 B8	IU29 B6	IU40 D8	IU56 D10	IU63 A3	IU81 D13
1U01 A14	2U15 C4	2U22 C9	2U29 D8	2U58 B12	3U02 C3	3U09 D6	3U16 E8	3U23 A6	3U30 D5	3U38 G2	3U86 A3	3U96 C7	3UA7 E11	6U12 A3	7U01-2 A6	7U10-2 D4	7U29-1 B12	FU06 C9	IU01 A14	IU09 C4	IU16 B6	IU23 A6	IU30 B6	IU41 D8	IU57 D11	IU65 D5	IU86 A7
2U09 F3	2U16 A5	2U23 F3	2U30 E8	2U72 B11	3U03 C3	3U10 C6	3U17 E9	3U24 A6	3U31 D4	3U54 D11	3U87 A2	3U97 C6	3UA8 D8	6U21 E8	7U03-1 B6	7U13-1 A3	7U29-2 B11	FU07 E12	IU03 B3	IU10 C5	IU17 B6	IU24 A5	IU31 B6	IU42 A12	IU58 D10	IU66 D4	IU88 F9
2U10 G3	2U17 A5	2U24 B9	2U31 A6	2U73 D12	3U04 C3	3U11 E8	3U18 D9	3U25 B6	3U32 E4	3U55 D10	3U88 A3	3UA1 B12	3UA9 D8	6U22 D7	7U03-2 B7	7U13-2 A3	9U03 H14	FU08 D12	IU04 B4	IU11 C3	IU18 A6	IU25 C6	IU32 B6	IU44 C7	IU59 D11	IU68 E4	c111 E11
2U11 E7	2U18 C6	2U25 A11	2U32 B7	2U85 B9	3U05 C4	3U12 B8	3U19 F9	3U26 B6	3U33 E4	3U56 D11	3U89 B2	3UA2 B11	5U00 A8	6U23 D8	7U05-1 C3	7U15-1 D10	FU01 A14	FU13 C7	IU05 B4	IU12 C2	IU19 A6	IU26 D7	IU33 A4	IU45 C6	IU60 D8	IU78 B11	
2U12 C6	2U19 B8	2U26 D8	2U37 F9	2U86 C13	3U06 C5	3U13 B8	3U20 D8	3U27 B6	3U34 B4	3U82 C7	3U93 D10	3UA3 D12	5U02 A11	6U25 D12	7U05-2 C4	7U15-2 D10	FU02 B4	FU18 F12	IU06 B4	IU13 D6	IU20 A2	IU27 E7	IU36 B6	IU54 B8	IU61 G3	IU79 B12	

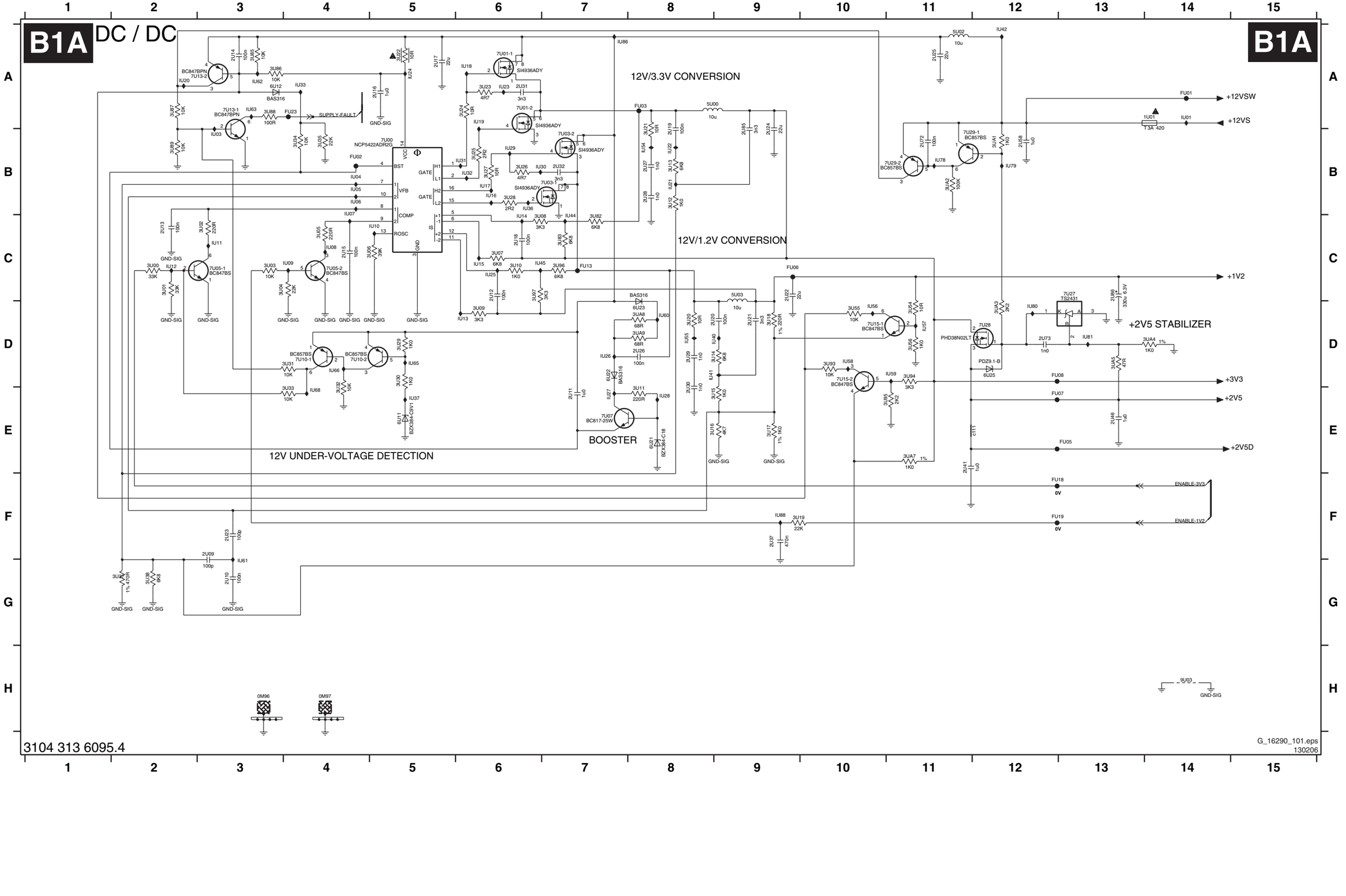

SSB: Supply + RS232

B1B SUPPLY + RS232

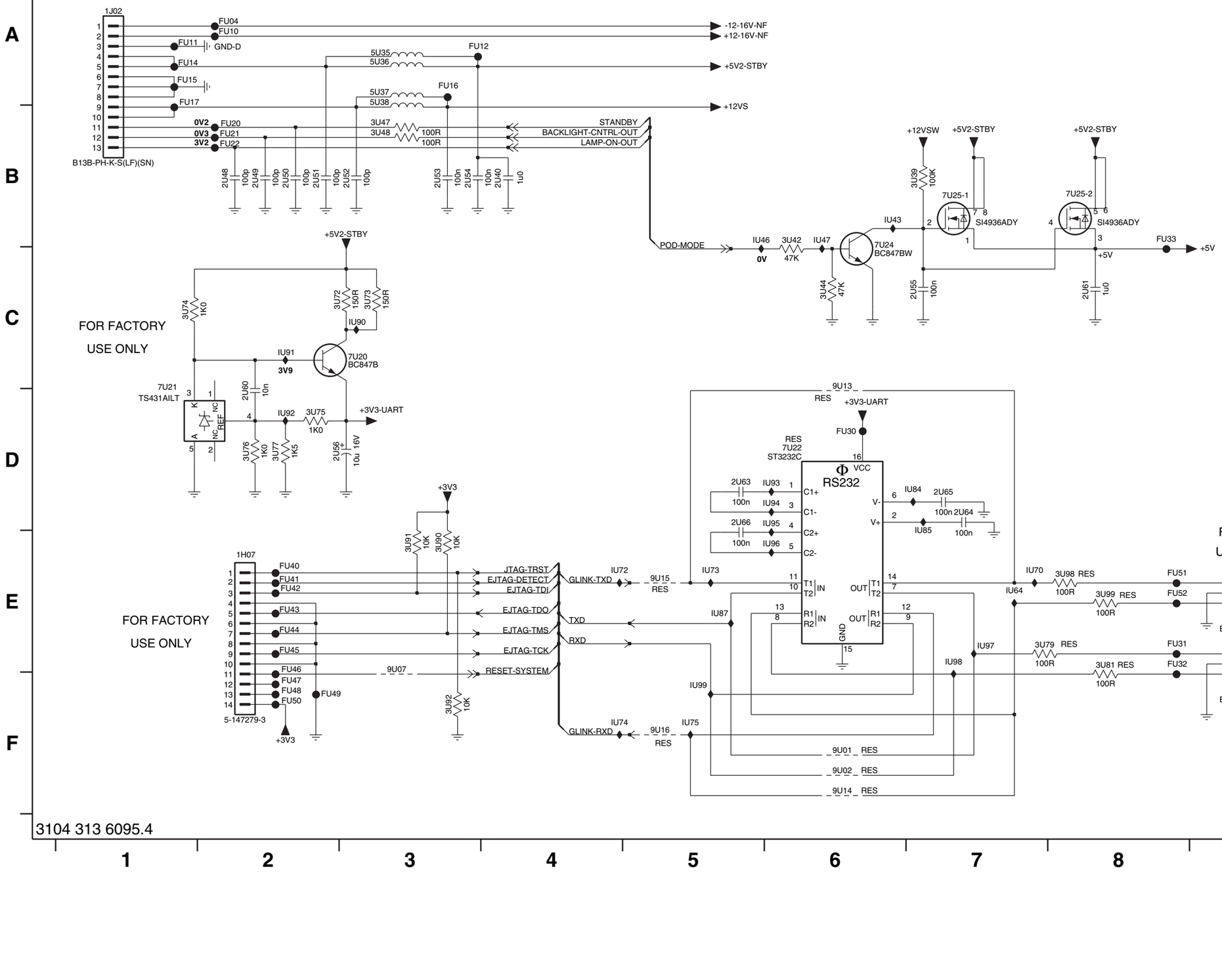

3104 313 6095.4

G_16290_102.eps
130206

1H07 E2	FU46 E2
1J02 A1	FU47 F2
1U02 E9	FU48 F2
1U03 E9	FU49 F2
2U40 B4	FU50 F2
2U48 B2	FU51 E8
2U49 B2	FU52 E8
2U50 B2	IU43 B6
2U51 B2	IU46 B5
2U52 B3	IU47 B6
2U53 B3	IU64 E7
2U54 B3	IU70 E7
2U55 C7	IU72 E4
2U56 D2	IU73 E5
2U60 D2	IU74 F4
2U61 C8	IU75 F5
2U63 D5	IU84 D7
2U64 D7	IU85 D7
2U65 D7	IU87 E5
2U66 D5	IU90 C3
3U39 B7	IU91 C2
3U42 B6	IU92 D2
3U44 C6	IU93 D6
3U47 B3	IU94 D6
3U48 B3	IU95 D6
3U72 C3	IU96 E6
3U73 C3	IU97 E7
3U74 C1	IU98 E7
3U75 D2	IU99 F5
3U76 D2	
3U77 D2	
3U79 E7	
3U81 E8	
3U90 E3	
3U91 E3	
3U92 F3	
3U98 E8	
3U99 E8	
5U35 A3	
5U36 A3	
5U37 A3	
5U38 A3	
7U20 C3	
7U21 D1	
7U22 D6	
7U24 C6	
7U25-1 B7	
7U25-2 B8	
9U01 F6	
9U02 F6	
9U07 E3	
9U13 C6	
9U14 F6	
9U15 E5	
9U16 F5	
FU04 A2	
FU10 A2	
FU11 A1	
FU12 A3	
FU14 A1	
FU15 A1	
FU16 A3	
FU17 A1	
FU20 B2	
FU21 B2	
FU22 B2	
FU30 D6	
FU31 E8	
FU32 E8	
FU33 B8	
FU40 E2	
FU41 E2	
FU42 E2	
FU43 E2	
FU44 E2	
FU45 E2	

SSB: Channel Decoder

B2A CHANNEL DECODER

B2A

1T10 H1
1T11 E6
2T30 A2
2T31 B2
2T33 B2
2T34 C2
2T35 D2
2T36 D8
2T37 D6
2T38 D6
2T39 D6
2T40 D6
2T41 D7
2T42 D7
2T43 D7
2T44 D7
2T45 D8
2T46 D7
2T47 D11
2T48 D12
2T49 D12
2T50 D12
2T52 E5
2T53 E6
2T54 E6
2T56 E7
2T57 E7
2T58 E6
2T59 E7
2T60 E12
2T61 F12
2T62 F7
2T63 F7
2T64 G2
2T65 G7
2T66 G7
2T67 H5
3T31 G5
3T35-1 G11
3T35-2 G12
3T35-3 G11
3T35-4 G12
3T36-1 G11
3T36-2 G12
3T36-3 G11
3T36-4 G12
3T37-1 F12
3T37-2 F12
3T37-3 F12
3T37-4 F12
3T38 G7
3T39 H7
3T40 F11
3T41 F7
3T42 F2
3T43 F11
3T44 F7
3T45 F1
3T46 F1
3T47 F2
3T48 F6
3T49 F3
3T50 F1
3T51 F6
3T52 F7
3T53 G6
3T54 G6
3T55 H2
3T56 H3
3T57 I3
3T58 I4
5T20 A2
5T21 B2
5T23 B2
5T24 C2
5T25 C2
5T26 D2
5T27 D2
5T28 E2
7T20-1 F1
7T20-2 F2
7T21 F3
7T22 E8
7T23 H4
9T10 G5
9T11 H3
9T12 H3
9T13 I5
AT35 E11
FT20 A2
FT21 B2
FT22 B2
FT23 C2
FT24 C2
FT25 D2
FT26 D2
FT27 E2
FT28 F3
FT29 F2
IT01 F12
IT30 B1
IT31 E7
IT32 F7
IT33 F6
IT34 E6
IT36 G8
IT37 E7
IT38 E6
IT40 G6
IT41 I5
IT45 F1
IT46 F2
IT47 F1
IT48 F2
IT49 F2
IT50 F3
IT51 H4
IT52 I2
IT53 I3
IT54 I4

3104 313 6095.4

G_16290_103.eps
130206

SSB: Main Tuner

B2B MAIN TUNER

B2B

MAIN DIG TUNER C0

1T04
TD1316O/FGHP
TUNER
DC_PWR
+5V
OOB
FM-T
RF_GC
SNU
AS
SCL
SDA
NC
VTUN
IF_OUT
IF_AGC
IF_1
IF_2
IT60

+5VTUN
3T15 4K7
IT13
IT14
IT15
IT16
7T12 BC847BW
3T18 4K7
3T21 4K7
FT10
FT11
FT12
FT15
FT30
2T10 10n
2T11 10n
2T12 10n
2T13 10n
2T14 10n
2T15 10n
2T25 10n
2T18 10n
IT08
IT09
2T26 180p
2T27 180p
3T22 220R
3T23 226R
3T24 4K7
3T25 4K7
3T27 1K0
2T23 100n
IT27
IT26
I2C-SCL-TUNER
I2C-SDA-TUNER
IF-ANA
FAT-IF-AGC

1T01
X7351P
44M
IGND
OGND
GND
AT14
AT13
AT20
AT23
2T19 10n
2T20 10n

FM-TRAP

7T13
UPC3218GV
INPUT1
INPUT2
VAGC
AGC CONTROL
VCC
OUTPUT1
OUTPUT2
GND1
GND2
2T16 1u0
IT17
IT24
IT25
IT18
IT21
2T17 10n
2T21 10n
IT19
IT22
FAT-ADC-INP
FAT-ADC-INN
2T22 10n
3T29 1K0

AUX-IF-AGC

+12VSW
IT60
3T20 47R
IT61
3T10 47R
IT62
5T11 220R
+5VTUN
7T10
LD1117DT
IN
OUT
COM
2T24 1u0

1T01 D5
1T04 B1
2T10 C1
2T11 C2
2T12 C2
2T13 C2
2T14 D2
2T15 D2
2T16 C8
2T17 D9
2T18 D2
2T19 D6
2T20 D6
2T21 D9
2T22 E7
2T23 E3
2T24 D12
2T25 C2
2T26 D2
2T27 E2
3T10 C12
3T15 C3
3T18 C4
3T20 C11
3T21 C4
3T22 E2
3T23 E2
3T25 E2
3T27 E2
3T28 E2
3T29 E7
5T11 C12
7T10 C11
7T12 C3
7T13 D7
AT13 D4
AT14 D4
AT20 D6
AT23 D6
FT10 C2
FT11 C3
FT12 D2
FT15 E3
FT30 E7
IT08 D2
IT09 D2
IT10 C2
IT11 C2
IT12 C2
IT13 C3
IT14 C1
IT15 C4
IT16 C4
IT17 D7
IT18 D9
IT19 D9
IT21 D9
IT22 D9
IT24 D7
IT25 D7
IT26 F2
IT27 F2
IT60 C11
IT61 C11
IT62 C12

3104 313 6095.4

G_16290_104.eps
150206

SSB: MPIF Main: Video Source Selection

B3A MPIF MAIN: VIDEO SOURCE SELECTION

B3A

SOURCE SELECT AND DATA LINK

7A00-4 PNX3000HL/N2

CVBSOUTIF-MAIN
AV1_CVBS
CVBS-IN
AV2_Y-CVBS
AV2_C
FRONT_Y-CVBS
FRONT_C
AV7_Y-CVBS
FRONT_Y-CVBS
FRONT_C
AUDIO-IN5-L
AUDIO-IN5-R
AUDIO-HDPH-L-AP
AUDIO-HDPH-R-AP
SDA-DMA
SCL-DMA
POWER-DOWN_BOLT-ON
AUDIO-IN3-R
AUDIO-IN3-L
CVBS-IN
DMMI_B-PB-IN
DMMI_G-Y-IN
DMMI_R-PR-IN
H_SYNC_IN
AV1-AV6_FBL-HSYNC
AUDIO-OUT1-L
AUDIO-OUT1-R
I2C
V_SYNC_IN
HP-DET-R-DC
SC-STANDBY
ITV-IR-SW-RESET

CVBS_IF
CVBS1
CVBS2
CVBS_DTV
CVBS|Y3
C3
CVBS|Y4
C4
Y_COMB
C_COMB
GND_VSW
R|PR|V_1
G|Y|Y_1
B|PB|U_1
R|PR|V_2
G|Y|Y_2
B|PB|U_2
VCC_DIG
GND_DIG
VD2V5
FUSE10
VCC_I2D
GND_I2D
CVBS_OUTA
CVBS_OUTB
STROBE1N
STROBE1P
DATA1N
DATA1P
STROBE3N
STROBE3P
DATA3N
DATA3P
STROBE2N
STROBE2P
DATA2N
DATA2P
HV_PRIM
HV_SEC

STROBE1N-MAIN
STROBE1P-MAIN
DATA1N-MAIN
DATA1P-MAIN
STROBE3N-MAIN
STROBE3P-MAIN
DATA3N-MAIN
DATA3P-MAIN
STROBE2N-MAIN
STROBE2P-MAIN
DATA2N-MAIN
DATA2P-MAIN
HV-PRM-MAIN

1M36 B11B-PH-K
1A01 AF732L-N2G1A
7A20 BC847BW
+5V
+3V3-STANDBY

1MM1 EMC HOLE
0T00
0T10
0T11
0T12
0T13

G_16290_105.eps
150206

0T00 I3
0T10 I4
0T11 I5
0T12 I6
0T13 I6
1A01 F7
1M36 D5
1MM1 I2
2A04 F3
2A05 G4
2A06 H3
2A07 E3
2A08 E3
2A09 E3
2A10 B3
2A11 B3
2A12 B3
2A13 B4
2A14 B5
2A15 C3
2A16 C3
2A17 C3
2A18 C3
2A20 C5
2A21 C6
2A23 E4
2A24 E4
2A25 E4
2A26 E10
2A27 E8
2A29 D8
2A30 B3
2A31 C3
2A32 E8
2A94 C8
2A95 C8
2A96 D7
2A97 A11
3A01 G3
3A02 G4
3A03 G4
3A04 B11
3A05 G3
3A06 G3
3A60 D3
3A61 D2
3A62 E3
3A63 E2
5A10 D7
5A11 E7
5A64 E3
5A65 E2
7A00-4 A9
7A20 A11
AA47 H7
FA01 G7
FA02 G7
FA03 G7
FA10 D12
FA11 D8
FA12 E8
FA25 D4
FA26 D4
FA27 E4
FA28 E4
FA29 E4
FA30 E4
FA31 E4
FA32 F7
FA33 F7
FA34 F7
FA35 F7
FA36 F7
FA37 F7
FA38 F7
FA39 G7
FA40 G7
FA41 G7
FA42 G7
FA43 G7
FA44 H7
FA45 H7
FA46 H7
FC02 B6
IA10 B3
IA11 B4
IA12 B4
IA13 B10
IA14 B5
IA15 B10
IA16 C6
IA17 C5
IA18 D10
IA19 D8

SSB: MPIF Main: Supply

B3B MPIF MAIN: SUPPLY

B3B

7A00-3
PNX3000HL/N2

MPIF-SUPPLY
E/W & CONTROL

VOUTO 2
VAUDS 3
VDEFLO 20
VDEFLS 21
RREF 13
BGDEC 7
FUSE9 33
FUSE8 10
FUSE7 23
GND_FILT 11
GND_RGB 29
GND_VADC 34
VCC_FILT 14
VCC_RGB 28
VCC_VADC 35
TESTPIN3 18
TESTPIN2 24
EWVIN 36
REW 38
EWIOUT 37
SCL 44
SDA 43
IRQ 42
XREF 40
ADR 39
FUSE6 41

IA20 3V9
7A10 BC847BW
FA13 5A12 220R +5V
2A35 100n
IA21 3V2
9A10
FA14 3V2 VREF-AUD-POS
3A10 560R
2A37 100u 4V
IA22
2A38 1n0
3A11 1K2
IA23 1V4
VREF-AUD
3A12 1K2
IA24 3A13 47K
IA25
2A39 100n
2A40 1u0
2A41 1u0
FA15 5A13 220R +5V
FA16 5A14 220R +5V
2A42 10u 16V
2A43 100n
FA17 5A15 220R +5V
2A44 100n
2A45 100n
+5V
3A16 10K RES
IA26
IA27
IA28
3A14 100R
SCL-DMA
IA29
3A15 100R
SDA-DMA
IA30
IRQ-MPIF
3A21 470R
AC40
CLK-MPIF
+5V

2A35 A6
2A37 B6
2A38 B5
2A39 C4
2A40 C4
2A41 C4
2A42 D6
2A43 D6
2A44 E5
2A45 E4
3A10 B5
3A11 B5
3A12 B5
3A13 C4
3A14 F4
3A15 F4
3A16 E5
3A21 F6
5A12 A6
5A13 D7
5A14 D5
5A15 E4
7A00-3 B2
7A10 A5
9A10 A6
AC40 F6
FA13 A6
FA14 A7
FA15 D6
FA16 D5
FA17 E4
IA20 A5
IA21 A6
IA22 B5
IA23 B5
IA24 C4
IA25 C4
IA26 E3
IA27 E3
IA28 F3
IA29 F3
IA30 F6

3104 313 6095.4

G_16290_106.eps
150206

SSB: MPIF Main: IF & SAW Filter

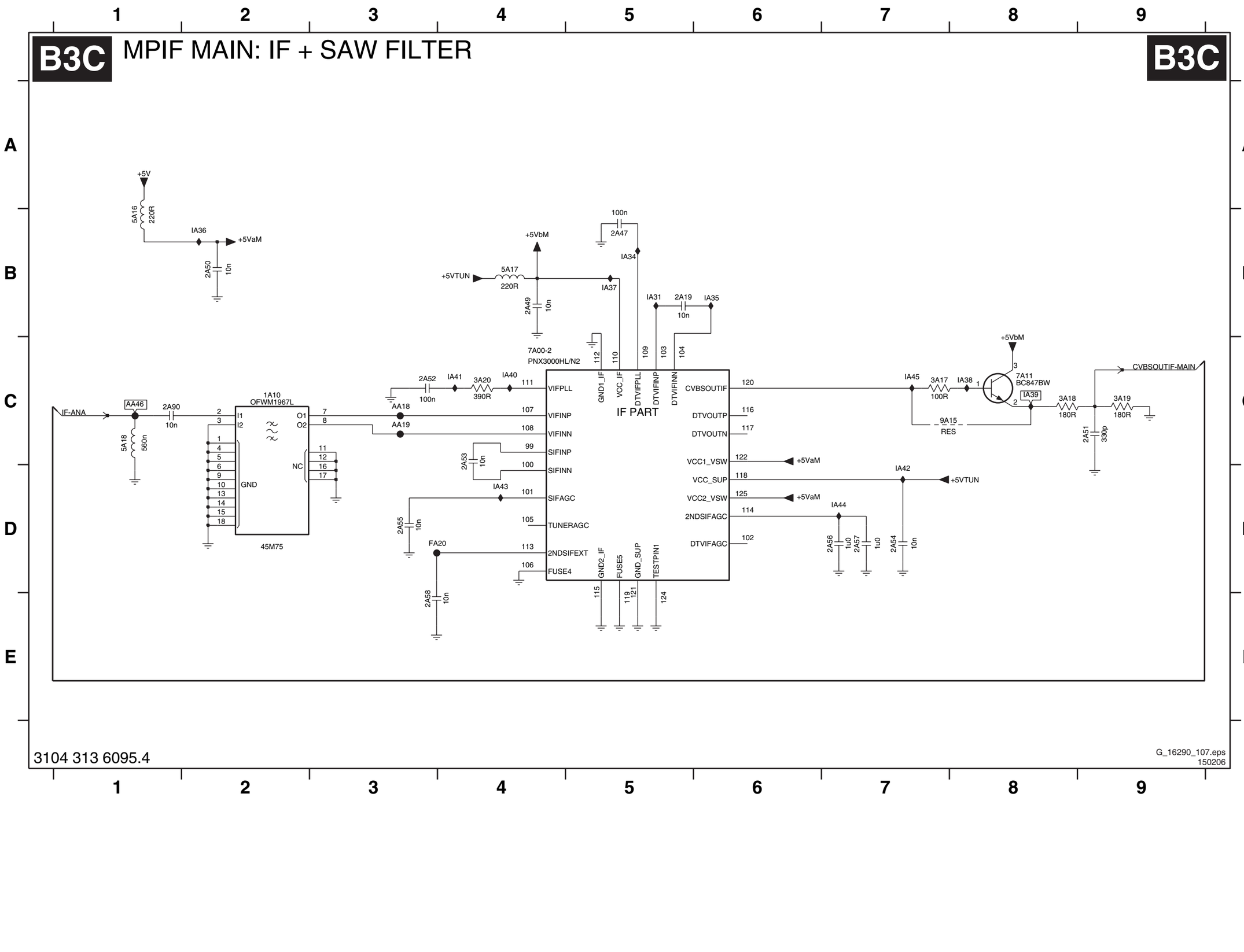

1A10 C2
2A19 B5
2A47 B5
2A49 B4
2A50 B2
2A51 C9
2A52 C3
2A53 C4
2A54 D7
2A55 D3
2A56 D7
2A57 D7
2A58 E3
2A90 C1
3A17 C7
3A18 C8
3A19 C9
3A20 C4
5A16 B1
5A17 B4
5A18 C1
7A00-2 C4
7A11 C8
9A15 C7
AA18 C3
AA19 C3
AA46 C1
FA20 D3
IA31 B5
IA34 B5
IA35 B6
IA36 B2
IA37 B5
IA38 C8
IA39 C8
IA40 C4
IA41 C4
IA42 D7
IA43 D4
IA44 D7
IA45 C7

SSB: MPIF Main: Audio Source Selection

B3D MPIF MAIN: AUDIO SOURCE SELECTION

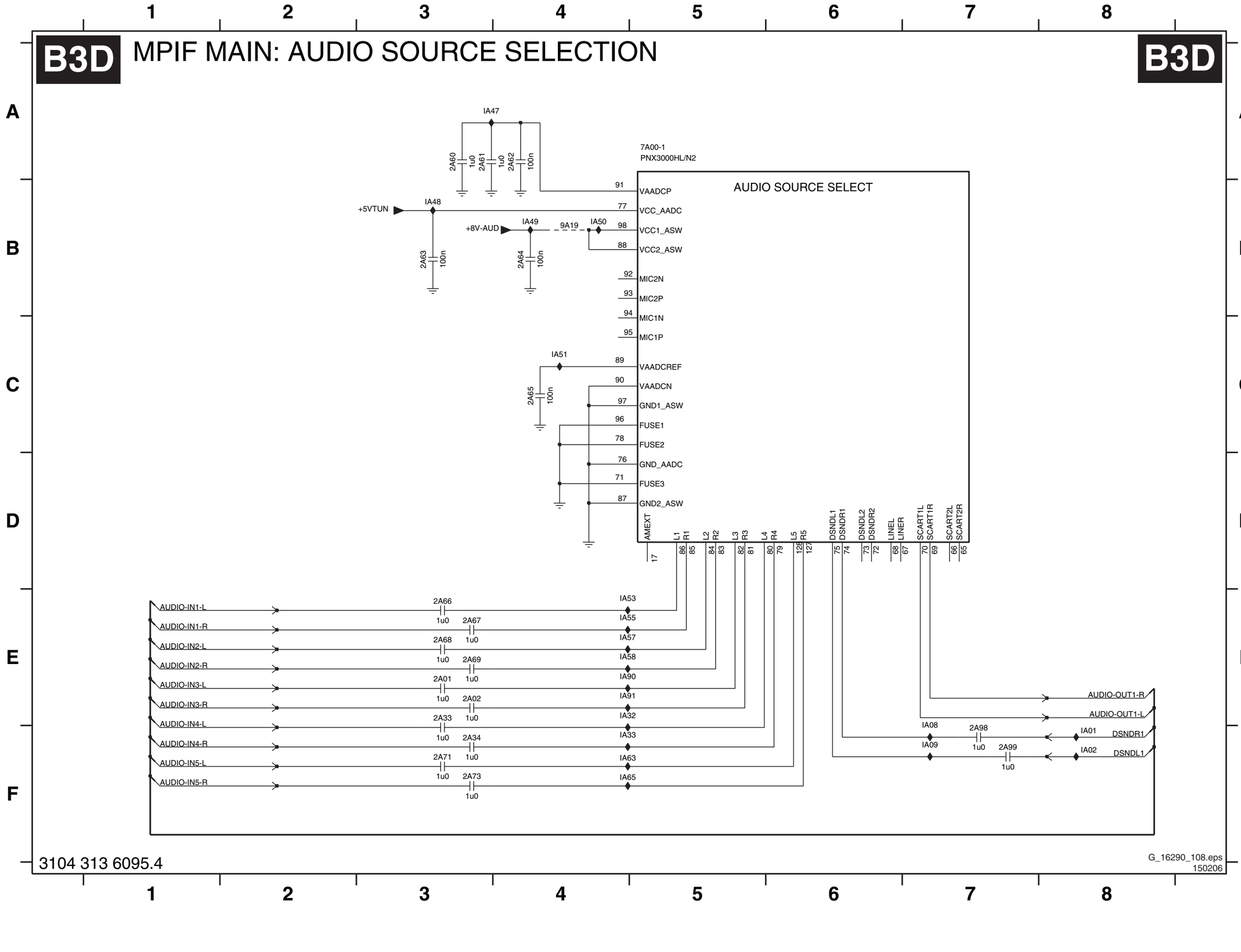

2A01 E3
2A02 E3
2A33 E3
2A34 F3
2A60 A3
2A61 A3
2A62 A4
2A63 B3
2A64 B4
2A65 C4
2A66 E3
2A67 E3
2A68 E3
2A69 E3
2A71 F3
2A73 F3
2A98 F7
2A99 F7
7A00-1 A5
9A19 B4
IA01 F8
IA02 F8
IA08 E7
IA09 F7
IA32 E4
IA33 F4
IA47 A3
IA48 B3
IA49 B4
IA50 B4
IA51 C4
IA53 E4
IA55 E4
IA57 E4
IA58 E4
IA63 F4
IA65 F4
IA90 E4
IA91 E4

3104 313 6095.4

G_16290_108.eps
150206

SSB: MPIF Main: Audio Amplifier

B3E MPIF MAIN: AUDIO AMPLIFIER

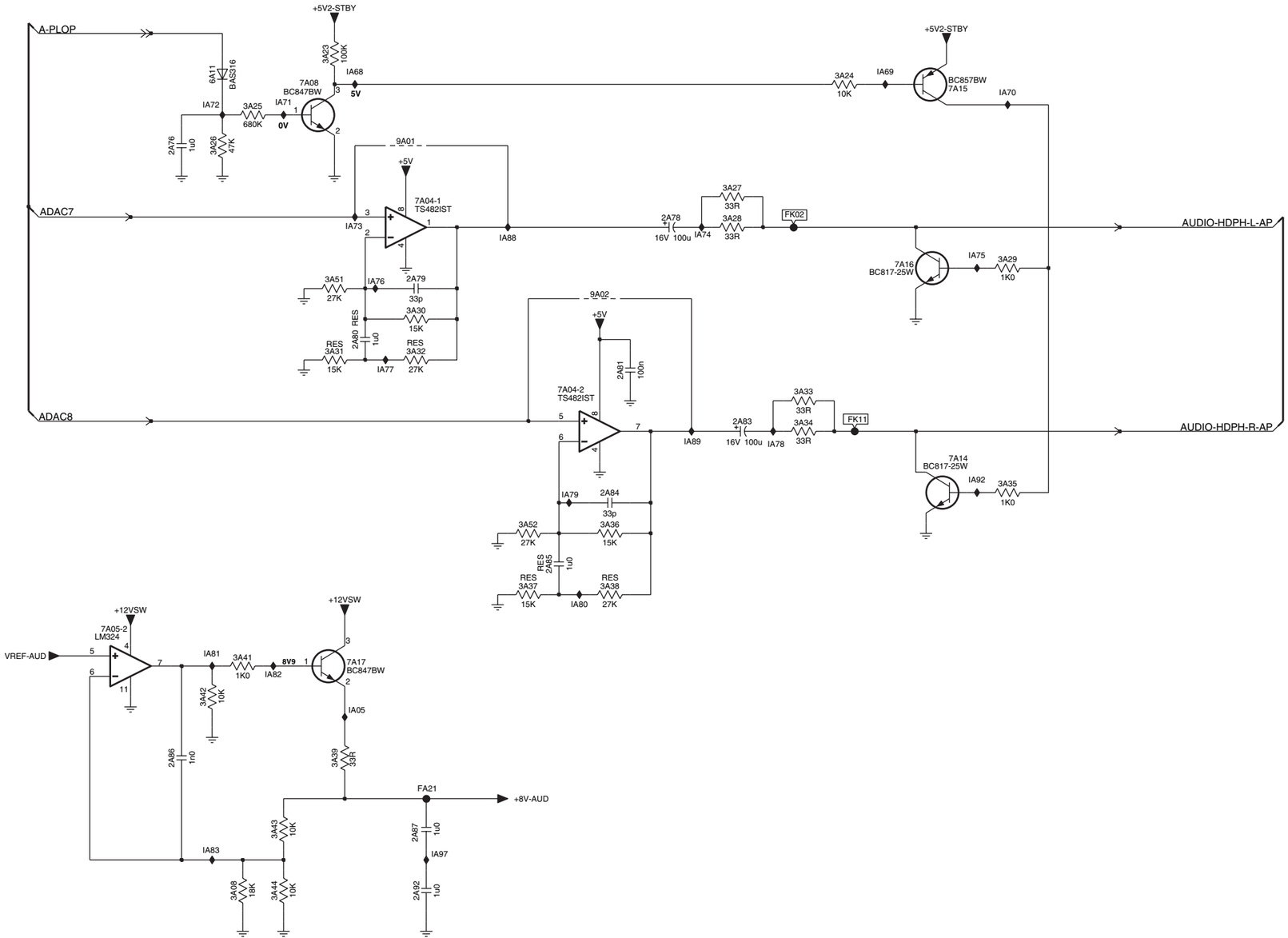

2A76 B2
2A78 C5
2A79 C4
2A80 C3
2A81 D5
2A83 D6
2A84 E5
2A85 E5
2A86 F2
2A87 G4
2A92 G4
3A08 G2
3A23 A3
3A24 B7
3A25 B3
3A26 B2
3A27 B6
3A28 C6
3A29 C8
3A30 C4
3A31 D3
3A32 D4
3A33 D6
3A34 D6
3A35 D8
3A36 E5
3A37 E4
3A38 E5
3A39 F3
3A41 F2
3A42 F2
3A43 G3
3A44 G3
3A51 C3
3A52 E4
6A11 B2
7A04-1 C4
7A04-2 D5
7A05-2 E1
7A08 B3
7A14 D8
7A15 B7
7A16 C7
7A17 F3
9A01 B4
9A02 C5
FA21 G4
FK02 C6
FK11 D7
IA05 F3
IA68 B3
IA69 B7
IA70 B8
IA71 B3
IA72 B2
IA73 C3
IA74 C6
IA75 C8
IA76 C3
IA77 D3
IA78 D6
IA79 E5
IA80 E5
IA81 F2
IA82 F3
IA83 G2
IA88 C4
IA89 D6
IA92 D8
IA97 G4

3104 313 6095.4

G_16290_109.eps
150206

SSB: PNX2015: Audio / Video

B4A PNX2015: AUDIO / VIDEO

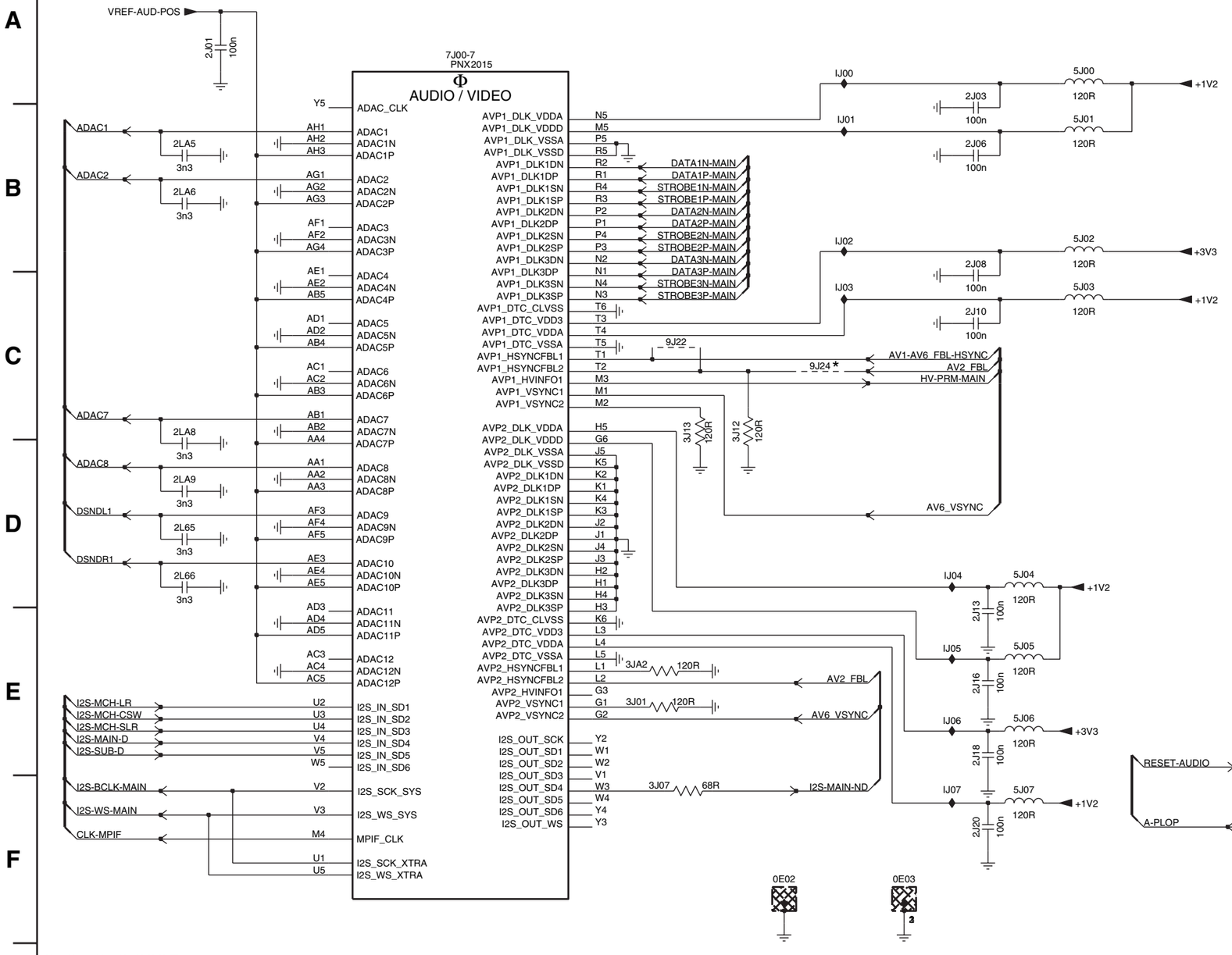

3104 313 6095.4

G_16290_110.eps
150206

0E02 F5
0E03 F5
2J01 A1
2J03 A6
2J06 B6
2J08 B6
2J10 C6
2J13 E6
2J16 E6
2J18 E6
2J20 F6
2L65 D1
2L66 D1
2LA5 B1
2LA6 B1
2LA8 C1
2LA9 D1
2LT0 E9
3J01 E4
3J07 F4
3J12 C4
3J13 C4
3JA2 E4
3L00 E9
3L01 E8
3L02 E9
3L03 E8
5J00 A6
5J01 B6
5J02 B6
5J03 C6
5J04 D6
5J05 E6
5J06 E6
5J07 F6
6J07 D9
6J08 D9
7J00-7 A3
7J01 E8
7J02-1 F9
7J02-2 E9
9J22 C4
9J24 C5
FLA8 E7
IJ00 A5
IJ01 B5
IJ02 B5
IJ03 C5
IJ04 D6
IJ05 E6
IJ06 E6
IJ07 F6
IJ09 E9
IJ11 E8
IJ25 E9
IJ26 E9
IJ27 F8
IJ53 D9
IJ54 D9
IJ55 E8

SSB: PNX2015: DV I/O Interface

B4B PNX 2015: DV I/O INTERFACE

B4B

3LR0 D4
3LR1 C4
3LR9-1 D4
3LR9-2 E4
3LR9-3 D4
3LR9-4 D4
3LS0-2 D4
3LS0-3 D4
3LS0-4 E4
3LS1-1 D4
3LS1-2 D4
3LS1-3 E4
3LS1-4 E4
7J00-2 B7
7J00-4 B2
AJ10 D8

7J00-4
PNX2015
Φ
DV INPUT

DV4-CLK AK8 → DV_CLK
DV4-VALID AH8 → DV_VALID
DV4-DATA0_SOP AG8 → DV4_DATA_0
DV4-DATA1_ERR AK7 → DV4_DATA_1
DV4-DATA2_0 AJ7 → DV4_DATA_2
DV4-DATA3_1 AH7 → DV4_DATA_3
DV4-DATA4_2 AG7 → DV4_DATA_4
DV4-DATA5_3 AF7 → DV4_DATA_5
DV4-DATA6_4 AK6 → DV4_DATA_6
DV4-DATA7_5 AJ6 → DV4_DATA_7
DV4-DATA8_6 AH6 → DV4_DATA_8
DV4-DATA9_7 AG6 → DV4_DATA_9

DV5-DATA0_SOP AF6 → DV5_DATA_0
DV5-DATA1_ERR AK5 → DV5_DATA_1
DV5-DATA2_0 AH5 → DV5_DATA_2
DV5-DATA3_1 AG5 → DV5_DATA_3
DV5-DATA4_2 AK4 → DV5_DATA_4
DV5-DATA5_3 AJ4 → DV5_DATA_5
DV5-DATA6_4 AH4 → DV5_DATA_6
DV5-DATA7_5 AK3 → DV5_DATA_7
DV5-DATA8_6 AJ3 → DV5_DATA_8
DV5-DATA9_7 AK2 → DV5_DATA_9

DV-VREF AJ9 → DV_VREF
DV-FREF AK9 → DV_FREF
DV-HREF AH9 → DV_HREF

DV1_CLK AD28
DV1_VALID AD29
DV1_DATA0 AB27
DV1_DATA1 AA30
DV1_DATA2 AA29
DV1_DATA3 AA28
DV1_DATA4 AB29
DV1_DATA5 AB28
DV1_DATA6 AC30
DV1_DATA7 AC28
DV1_DATA8 AC27
DV1_DATA9 AB30

DV2_CLK AF30 → 33R 3LR1 → DV2A-CLK
DV2_VALID AF27
DV2_DATA0 AE30
DV2_DATA1 AF28
DV2_DATA2 AD27
DV2_DATA3 AD26
DV2_DATA4 AD30
DV2_DATA5 AE26
DV2_DATA6 AE27
DV2_DATA7 AE28
DV2_DATA8 AE29
DV2_DATA9 AG27

DV3_CLK AK28 → 33R 3LR0 → DV3F-CLK
DV3_VALID AK30 → 33R 3LS1-2 → DV3F-VALID
DV3_DATA0 AJ30 → 33R 3LR9-4 → DV3F-DATA0_SOP
DV3_DATA1 AH29 → 33R 3LR9-3 → DV3F-DATA1_ERR
DV3_DATA2 AG29 → 33R 3LS0-3 → DV3F-DATA2_0
DV3_DATA3 AG30 → 33R 3LR9-1 → DV3F-DATA3_1
DV3_DATA4 AH30 → 33R 3LS1-1 → DV3F-DATA4_2
DV3_DATA5 AG28 → 33R 3LS0-2 → DV3F-DATA5_3
DV3_DATA6 AH27 → 33R 3LR9-2 → DV3F-DATA6_4
DV3_DATA7 AJ28 → 33R 3LS1-3 → DV3F-DATA7_5
DV3_DATA8 AK29 → 33R 3LS1-4 → DV3F-DATA8_6
DV3_DATA9 AH28 → 33R 3LS0-4 → DV3F-DATA9_7

7J00-2
PNX2015
Φ
OUTPUT INTERFACE

MP-ROUT-0 A27 → RIN0
MP-ROUT-1 A28 → RIN1
MP-ROUT-2 A29 → RIN2
MP-ROUT-3 A30 → RIN3
MP-ROUT-4 B28 → RIN4
MP-ROUT-5 B30 → RIN5
MP-ROUT-6 C28 → RIN6
MP-ROUT-7 C29 → RIN7
MP-ROUT-8 C30 → RIN8
MP-ROUT-9 D27 → RIN9

MP-GOUT-0 D28 → GIN0
MP-GOUT-1 D29 → GIN1
MP-GOUT-2 D30 → GIN2
MP-GOUT-3 E27 → GIN3
MP-GOUT-4 E28 → GIN4
MP-GOUT-5 E30 → GIN5
MP-GOUT-6 F26 → GIN6
MP-GOUT-7 F27 → GIN7
MP-GOUT-8 F28 → GIN8
MP-GOUT-9 F29 → GIN9

MP-BOUT-0 F30 → BIN0
MP-BOUT-1 G26 → BIN1
MP-BOUT-2 G27 → BIN2
MP-BOUT-3 G28 → BIN3
MP-BOUT-4 G29 → BIN4
MP-BOUT-5 G30 → BIN5
MP-BOUT-6 H27 → BIN6
MP-BOUT-7 H28 → BIN7
MP-BOUT-8 H30 → BIN8
MP-BOUT-9 J26 → BIN9

LVDS_AN B26 → TXPNXA-
LVDS_AP C26 → TXPNXA+
LVDS_BN A25 → TXPNXB-
LVDS_BP B25 → TXPNXB+
LVDS_CN D25 → TXPNXC-
LVDS_CP E25 → TXPNXC+
LVDS_DN B24 → TXPNXD-
LVDS_DP C24 → TXPNXD+
LVDS_EN E24 → TXPNXE-
LVDS_EP F24 → TXPNXE+
LVDS_CLKN C23 → TXPNXCLK-
LVDS_CLKP D23 → TXPNXCLK+

RGB_CLK_IN J30 → MP-CLKOUT
RGB_UD J27 → MP-OUT-FFIELD
RGB_HSYNC J29 → MP-OUT-HS
RGB_VSYNC J28 → MP-OUT-VS
RGB_DE K26 → MP-OUT-DE

AJ10

3104 313 6095.4

G_16290_111.eps
150206

SSB: PNX2015: Tunnelbus

B4C PNX 2015: TUNNELBUS

B4C

7J00-1
PNX2015
Φ
TUNNELBUS

A1	TUNN_TX_BUSY	TUNS_TX_BUSY	R28		TUN-VIPER-RX-BUSY
D2	TUNN_TX_CLKN	TUNS_TX_CLKN	M30		
C2	TUNN_TX_CLKP	TUNS_TX_CLKP	M29	3L10 33R	TUN-VIPER-RX-CLKP
C4	TUNN_TX_D0	TUNS_TX_D0	K28	3L12-2 33R	TUN-VIPER-RX-DATA0
B4	TUNN_TX_D1	TUNS_TX_D1	K27	3L12-1 33R	TUN-VIPER-RX-DATA1
A4	TUNN_TX_D2	TUNS_TX_D2	L30	3L13-4 33R	TUN-VIPER-RX-DATA2
F3	TUNN_TX_D3	TUNS_TX_D3	L28	3L13-3 33R	TUN-VIPER-RX-DATA3
B3	TUNN_TX_D4	TUNS_TX_D4	K29	3L12-4 33R	TUN-VIPER-RX-DATA4
C3	TUNN_TX_D5	TUNS_TX_D5	N26	3L13-2 33R	TUN-VIPER-RX-DATA5
D3	TUNN_TX_D6	TUNS_TX_D6	L27	3L13-1 33R	TUN-VIPER-RX-DATA6
E3	TUNN_TX_D7	TUNS_TX_D7	K30	3L12-3 33R	TUN-VIPER-RX-DATA7
F2	TUNN_TX_D8	TUNS_TX_D8	M27	3L14-4 33R	TUN-VIPER-RX-DATA8
A3	TUNN_TX_D9	TUNS_TX_D9	N28	3L14-1 33R	TUN-VIPER-RX-DATA9
F1	TUNN_TX_D10	TUNS_TX_D10	N27	3L11-4 33R	TUN-VIPER-RX-DATA10
A2	TUNN_TX_D11	TUNS_TX_D11	P28	3L11-3 33R	TUN-VIPER-RX-DATA11
B1	TUNN_TX_D12	TUNS_TX_D12	P27	3L11-2 33R	TUN-VIPER-RX-DATA12
C1	TUNN_TX_D13	TUNS_TX_D13	N30	3L14-3 33R	TUN-VIPER-RX-DATA13
D1	TUNN_TX_D14	TUNS_TX_D14	N29	3L14-2 33R	TUN-VIPER-RX-DATA14
E1	TUNN_TX_D15	TUNS_TX_D15	R29	3L11-1 33R	TUN-VIPER-RX-DATA15
D9	TUNN_RX_D0	TUNS_RX_D0	R27		TUN-VIPER-TX-DATA0
C9	TUNN_RX_D1	TUNS_RX_D1	P30		TUN-VIPER-TX-DATA1
A9	TUNN_RX_D2	TUNS_RX_D2	T27		TUN-VIPER-TX-DATA2
D8	TUNN_RX_D3	TUNS_RX_D3	R30		TUN-VIPER-TX-DATA3
B9	TUNN_RX_D4	TUNS_RX_D4	T28		TUN-VIPER-TX-DATA4
D7	TUNN_RX_D5	TUNS_RX_D5	T29		TUN-VIPER-TX-DATA5
C8	TUNN_RX_D6	TUNS_RX_D6	T30		TUN-VIPER-TX-DATA6
A8	TUNN_RX_D7	TUNS_RX_D7	U27		TUN-VIPER-TX-DATA7
D6	TUNN_RX_D8	TUNS_RX_D8	V27		TUN-VIPER-TX-DATA8
C6	TUNN_RX_D9	TUNS_RX_D9	V28		TUN-VIPER-TX-DATA9
B6	TUNN_RX_D10	TUNS_RX_D10	V29		TUN-VIPER-TX-DATA10
A6	TUNN_RX_D11	TUNS_RX_D11	V30		TUN-VIPER-TX-DATA11
D5	TUNN_RX_D12	TUNS_RX_D12	W26		TUN-VIPER-TX-DATA12
C5	TUNN_RX_D13	TUNS_RX_D13	W27		TUN-VIPER-TX-DATA13
A5	TUNN_RX_D14	TUNS_RX_D14	W28		TUN-VIPER-TX-DATA14
E4	TUNN_RX_D15	TUNS_RX_D15	W29		TUN-VIPER-TX-DATA15
D4	TUNN_RX_BUSY	TUNS_RX_BUSY	W30	3L15 33R	TUN-VIPER-TX-BUSY
B7	TUNN_RX_CLKN	TUNS_RX_CLKN	U30		TUN-VIPER-TX-CLKN
C7	TUNN_RX_CLKP	TUNS_RX_CLKP	U28		TUN-VIPER-TX-CLKP
A7	TUNN_REF	TUNS_REF	M28		VREF-PNX

9LA8
9LA9
+2V5

2L64 1n0

2L01 1n0

+2V5 — IL03

2L06 1u0 RES

3L38 1K0

2L07 100n

3L20 47R — IL05 **1V3** — VREF-PNX

3L39 1K0

2L08 100n

2L01 E5
2L06 F2
2L07 F3
2L08 F3
2L64 E2
3L10 B4
3L11-1 C4
3L11-2 C5
3L11-3 C4
3L11-4 B5
3L12-1 B4
3L12-2 B5
3L12-3 B4
3L12-4 B5
3L13-1 B5
3L13-2 B4
3L13-3 B4
3L13-4 B5
3L14-1 B4
3L14-2 C5
3L14-3 C4
3L14-4 B5
3L15 D4
3L20 F3
3L38 F3
3L39 F3
7J00-1 A3
9LA8 D2
9LA9 D2
IL03 E3
IL05 F4

3104 313 6095.4

G_16290_112.eps
150206

SSB: PNX2015: DDR Interface

B4D PNX 2015: DDR INTERFACE

B4D

7J00-3
PNX 2015
DDR INTERFACE

PNX-MA-0 3L40 33R C12
PNX-MA-1 3L41 33R D12
PNX-MA-2 3L42 33R D11
PNX-MA-3 3L43 33R C10
PNX-MA-4 3L44 33R D21
PNX-MA-5 3L45 33R C21
PNX-MA-6 3L46 33R D20
PNX-MA-7 3L47 33R D19
PNX-MA-8 3L48 33R C19
PNX-MA-9 3L49 33R D18
PNX-MA-10 3L91 33R D13
PNX-MA-11 3L92 33R C18
PNX-MA-12 3L93 33R D17

MA_0 MA_1 MA_2 MA_3 MA_4 MA_5 MA_6 MA_7 MA_8 MA_9 MA_10 MA_11 MA_12

PNX-MDATA-0 A11
PNX-MDATA-1 B12
PNX-MDATA-2 C11
PNX-MDATA-3 A12
PNX-MDATA-4 A10
PNX-MDATA-5 B13
PNX-MDATA-6 B10
PNX-MDATA-7 A13
PNX-MDATA-8 A18
PNX-MDATA-9 B21
PNX-MDATA-10 B18
PNX-MDATA-11 A21
PNX-MDATA-12 A19
PNX-MDATA-13 C20
PNX-MDATA-14 B19
PNX-MDATA-15 A20

MD_0 MD_1 MD_2 MD_3 MD_4 MD_5 MD_6 MD_7 MD_8 MD_9 MD_10 MD_11 MD_12 MD_13 MD_14 MD_15

MBA_0 D14 3L95 33R PNX-MBA0
MBA_1 C13 3L94 33R PNX-MBA1
MCKE_0 3L90 1K0 PNX-MCKE
MCLK_N C17 A16 PNX-MCLK-N
MCLK_P 100R 3L51 A17 PNX-MCLK-P
MCS_0 C14 PNX-MCS-0
MDQM_0 B15 3L52 22R PNX-MDQM-0
MDQM_1 D16 3L99 22R PNX-MDQM-1
MDQS_0 A15 PNX-MDQS-0
MDQS_1 B16 PNX-MDQS-1

ILN1
Mem_DLL0 E21
Mem_DLL1 E10
MM_VREF C16

MRAS A14 3L98 33R PNX-MRAS
MCAS D15 3L97 33R PNX-MCAS
MWE C15 3L96 33R PNX-MWE

VREF-DDRPNX
2L60 100n
5L50 30R
2L59 1n0
FLA9
+1V2

+2V5-DDRPNX
2L56 100n
2L57 100n
2L58 100n
2L50 100n
2L51 100n
2L52 100n
2L53 100n
2L54 100n
2L61 1n0

7L50
K4D261638F-LC40
DDR SDRAM 128Mx16
VDD VDDQ

PNX-MA-0 29
PNX-MA-1 30
PNX-MA-2 31
PNX-MA-3 32
PNX-MA-4 35
PNX-MA-5 36
PNX-MA-6 37
PNX-MA-7 38
PNX-MA-8 39
PNX-MA-9 40
PNX-MA-10 28
PNX-MA-11 41
AP

PNX-MBA0 26
PNX-MBA1 27
BA

PNX-MDQM-0 20
PNX-MDQM-1 47
DM

VREF-DDRPNX 49
2L55 1n0
VREF

PNX-MCLK-N 46 CK
PNX-MCLK-P 45 CK
PNX-MCKE 44 CKE
PNX-MCS-0 24 CS
PNX-MRAS 23 RAS
PNX-MCAS 22 CAS
PNX-MWE 21 WE

NC 14 17 19 25 42 43 50 53
PNX-MA-12

PNX-MDATA-0 2 3L50 22R 3L56 PNX-MDATA-1
PNX-MDATA-2 5 3L57 22R 3L58 PNX-MDATA-3
PNX-MDATA-4 8 3L59 22R 3L60 PNX-MDATA-5
PNX-MDATA-6 11 3L61 22R 3L62 PNX-MDATA-7
PNX-MDATA-8 54 3L63 22R 3L64 PNX-MDATA-9
PNX-MDATA-10 57 3L65 22R 3L66 PNX-MDATA-11
PNX-MDATA-12 60 3L67 22R 3L68 PNX-MDATA-13
PNX-MDATA-14 63 3L69 22R 3L70 PNX-MDATA-15

DQS 16 3L89 PNX-MDQS-0
51 3L71 22R PNX-MDQS-1

VSS 34 48 66
VSSQ 6 12 52 58 64

+2V5 5L52 220R 5L51 220R IL04 +2V5-DDRPNX
2L62 1n0
2L63 100p

+2V5-DDRPNX 3L21 560R IK01 VREF-DDRPNX
3L22 560R

3104 313 6095.4

G_16290_113.eps
150206

2L50 A8
2L51 A8
2L52 A8
2L53 A9
2L54 A9
2L55 C6
2L56 A7
2L57 A7
2L58 A7
2L59 C5
2L60 C6
2L61 A9
2L62 E7
2L63 E7
3L40 A2
3L41 A1
3L42 A2
3L43 A1
3L44 B2
3L45 B1
3L46 B2
3L47 B1
3L48 B2
3L49 B1
3L50 B9
3L51 B4
3L52 B4
3L56 C9
3L57 C9
3L58 C9
3L59 C9
3L60 C9
3L61 C9
3L62 C9
3L63 C9
3L64 C9
3L65 C9
3L66 C9
3L67 C9
3L68 C9
3L69 C9
3L70 D9
3L71 D9
3L89 D9
3L90 B4
3L91 B2
3L92 B1
3L93 B2
3L94 B5
3L95 B4
3L96 C4
3L97 C4
3L98 C5
3L99 B5
5L50 C6
5L51 E7
5L52 E7
7J00-3 A3
7L50 B7
FLA9 C6
IL04 E7

SSB: PNX2015: Standby & Control

B4E PNX 2015: STANDBY & CONTROL

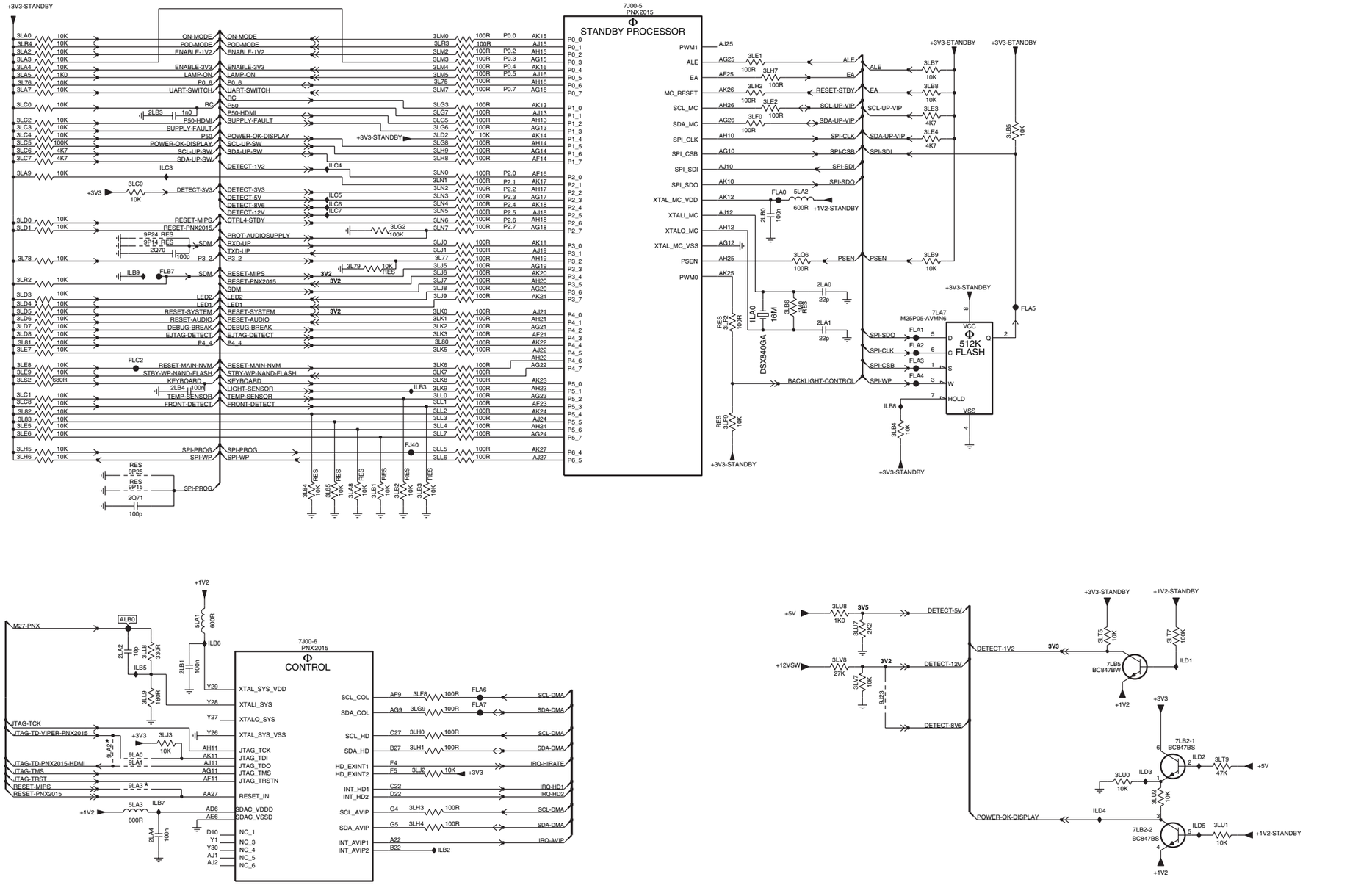

3104 313 6095.4

G_16290_114.eps
150206

SSB: PNX2015: Supply

B4F PNX 2015: SUPPLY

B4F

7J00-9
PNX2015
Φ
GND

B2	VSS_1	R16
B5	VSS_2	R17
B8	VSS_3	R18
B11	VSS_4	
B14	VSS_5	T13
B17	VSS_6	T14
B20	VSS_7	T15
B29	VSS_8	T16
C25	VSS_9	T17
D24	VSS_10	T18
D26	VSS_11	J6
E2	VSS_12	U6
E23	VSS_13	U13
E26	VSS_14	U14
E29	VSS_15	U15
H29	VSS_16	U16
L29	VSS_17	U17
N13	VSS_18	U18
N14	VSS_19	U29
N15	VSS_20	V13
N16	VSS_21	V14
N17	VSS_22	V15
N18	VSS_23	V16
P13	VSS_24	V17
P14	VSS_25	V18
P15	VSS_26	AC29
P16	VSS_27	AF29
P17	VSS_28	AJ5
P18	VSS_29	AJ8
U26	VSS_30	AJ14
U25	VSS_31	AJ17
P29	VSS_32	AJ20
R13	VSS_33	AJ23
R14	VSS_34	AJ26
R15	VSS_35	AJ29
	VSS_36	
	VSS_37	
	VSS_38	
	VSS_40	
	VSS_41	
	VSS_42	
	VSS_43	
	VSS_44	
	VSS_45	
	VSS_46	
	VSS_47	
	VSS_48	
	VSS_49	
	VSS_50	
	VSS_51	
	VSS_52	
	VSS_53	
	VSS_54	
	VSS_55	
	VSS_56	
	VSS_57	
	VSS_58	
	VSS_59	
	VSS_60	
	VSS_61	
	VSS_62	
	VSS_63	
	VSS_64	
	VSS_65	
	VSS_66	
	VSS_67	
	VSS_68	
	VSS_69	
	VSS_70	

7J00-8
PNX2015
Φ
SUPPLY

+1V2		
E9	C1V2_VDD_1	
E11	C1V2_VDD_2	
E12	C1V2_VDD_3	
E16	C1V2_VDD_4	
E17	C1V2_VDD_5	
F9	C1V2_VDD_6	
F10	C1V2_VDD_7	
F12	C1V2_VDD_8	
F16	C1V2_VDD_9	
F17	C1V2_VDD_10	
AA6	C1V2_VDD_11	
J25	C1V2_VDD_12	
K25	C1V2_VDD_13	
AB6	C1V2_VDD_14	
P6	C1V2_VDD_15	
R6	C1V2_VDD_16	
AB25	C1V2_VDD_17	
F22	C1V2_VDD_18	
F21	C1V2_VDD_19	
AA5	C1V2_VDD_20	
AE10	C1V2_VDD_21	
AE12	C1V2_VDD_22	
AF10	C1V2_VDD_23	
AF12	C1V2_VDD_24	
AF13	C1V2_VDD_25	
E20	C1V2_VDD_26	
E22	C1V2_VDD_27	
AA25	C1V2_VDD_28	
+3V3		
F25	P3V3VDD_1	
G25	P3V3VDD_2	
H26	P3V3VDD_3	
M6	P3V3VDD_4	
N6	P3V3VDD_5	
V6	P3V3VDD_6	
W6	P3V3VDD_7	
AF8	P3V3VDD_8	
AA26	P3V3VDD_9	
AB26	P3V3VDD_11	
AC26	P3V3VDD_12	
AD25	P3V3VDD_13	
AE7	P3V3VDD_14	
AE13	P3V3VDD_15	
AE14	P3V3VDD_16	
AE24	P3V3VDD_17	
AE25	P3V3VDD_18	
AF26	P3V3VDD_19	
+1V2-STANDBY		
AE15	SB1V2VDD_1	
AE16	SB1V2VDD_2	
AE17	SB1V2VDD_3	
AE18	SB1V2VDD_4	
AF15	SB1V2VDD_5	
AF17	SB1V2VDD_6	
AF18	SB1V2VDD_7	
+3V3-STANDBY		
AE19	SB3V3VDD_1	
AE21	SB3V3VDD_2	
AE22	SB3V3VDD_3	
AF19	SB3V3VDD_4	
AF20	SB3V3VDD_5	
A23	VDD_LVDS_1	
A24	VDD_LVDS_2	
A26	VDD_LVDS_3	
B23	VDD_LVDS	
LVDS-3V3		
AE9	VDDA_SYS_PLL	PLL-1V2
T25	VCCA_LVDS_PLL	LVDS-3V3
V25	VDDA_1_7_MCAB	+3V3
P26	VCCA_U5PLL	PLL-3V3
AF24	ADC_VSSA	
AF22	ADC3V3VDDA	UP-3V3
V26	AVDD_MCAB	+1V2
W25	AVSS_MCAB	
AK1	SDAC_3V3	
+2V5-DDRPNX		
+2V5		
E5	P2V5VDD_1	
E6	P2V5VDD_2	
E7	P2V5VDD_3	
E8	P2V5VDD_4	
E13	P2V5VDD_5	
E14	P2V5VDD_6	
E15	P2V5VDD_7	
E18	P2V5VDD_8	
E19	P2V5VDD_9	
F6	P2V5VDD_10	
F7	P2V5VDD_11	
F13	P2V5VDD_12	
F14	P2V5VDD_13	
F15	P2V5VDD_14	
F18	P2V5VDD_15	
F19	P2V5VDD_16	
L26	P2V5VDD_17	
M25	P2V5VDD_18	
M26	P2V5VDD_19	
N25	P2V5VDD_20	
R26	P2V5VDD_21	
P25	P2V5VDD_22	
T26	P2V5VDD_23	
R25	P2V5VDD_24	

+3V3: 2LN2 47u 4V, 2LN3 100n, 2LN4 100n, 2LN5 100n, 2LN6 100n, 2LN7 100n, 2LN8 100n

+1V2: 2LP0 100u 4V, 2LP2 100n, 2LP3 100n, 2LP4 100n

+2V5: 2LP7 100u 4V, 2LP8 100n, 2LP9 100n, 2LR0 100n

+3V3 — 5LN0 ILN3 600R — PLL-3V3: 2LP2 100n

+1V2 — 5LN1 ILN4 600R — PLL-1V2: 2LR4 100n

+3V3-STANDBY — 5LN2 ILN5 600R — UP-3V3: 2LR5 100n, 2LR6 100n

+3V3 — 5LN3 ILN6 600R — LVDS-3V3: 2LR8 100n, 2LR9 100n

+1V2-STANDBY — ILN2 5LN4 600R: 2LS5 100n

+2V5-DDRPNX: 2L80 2u2, 2L81 2u2, 2L82 2u2, 2L83 2u2, 2L84 100n, 2L85 100n, 2L86 100n, 2L87 100n, 2L88 100p, 2L89 1n0, 2L90 1n0, 2L91 1n0, 2L92 1n0

2L80 E1
2L81 E1
2L82 E1
2L83 E1
2L84 E1
2L85 E1
2L86 E2
2L87 E2
2L88 E2
2L89 E2
2L90 E2
2L91 E3
2L92 E3
2LN2 A7
2LN3 A7
2LN4 A7
2LN5 A8
2LN6 A8
2LN7 A8
2LN8 A8
2LP0 B7
2LP2 B8
2LP3 B8
2LP4 B8
2LP7 C8
2LP8 C8
2LP9 C8
2LR0 C8
2LR2 C8
2LR4 D8
2LR5 D8
2LR6 D8
2LR8 E8
2LR9 E8
2LS5 E6
5LN0 C7
5LN1 D7
5LN2 D7
5LN3 E7
5LN4 E6
7J00-8 A5
7J00-9 A2
ILN2 E6
ILN3 C8
ILN4 D8
ILN5 D8
ILN6 E8

3104 313 6095.4

G_16290_115.eps
150206

SSB: PNX2015: Display Interface

B4G VIPER/PNX 2015: DISPLAY INTERFACE

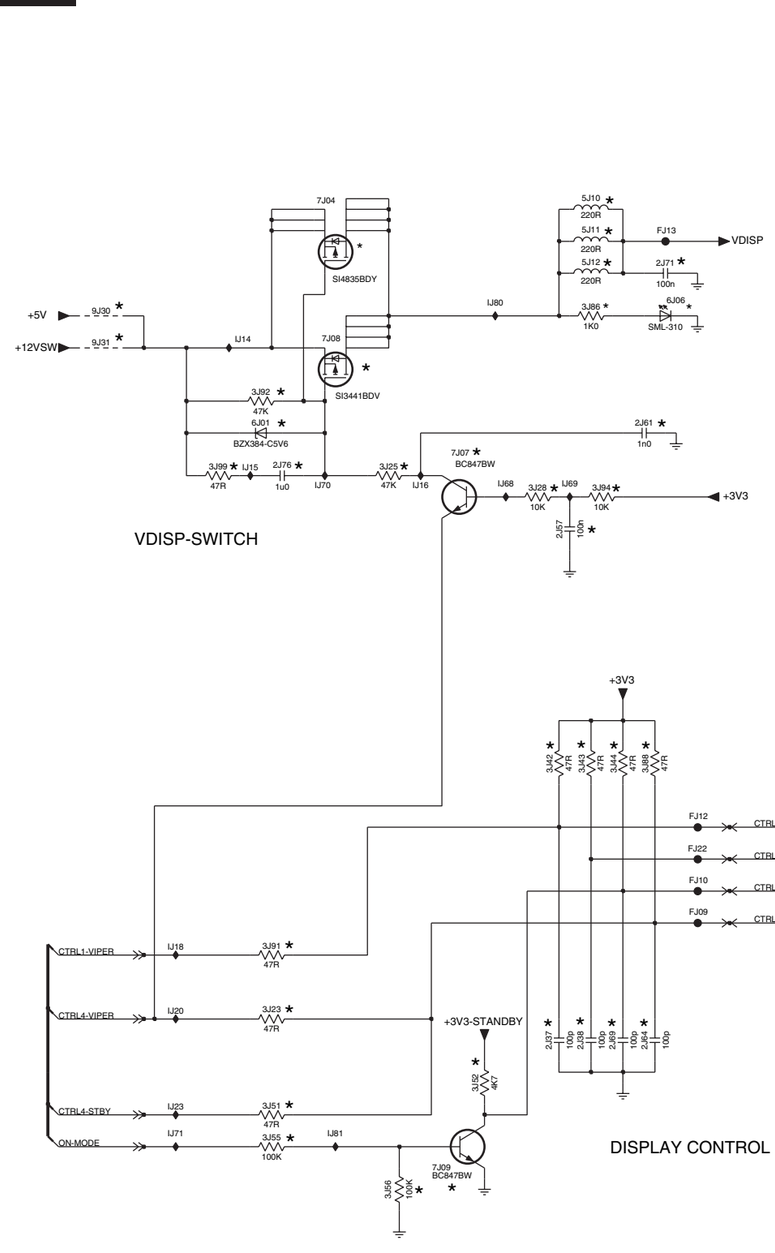

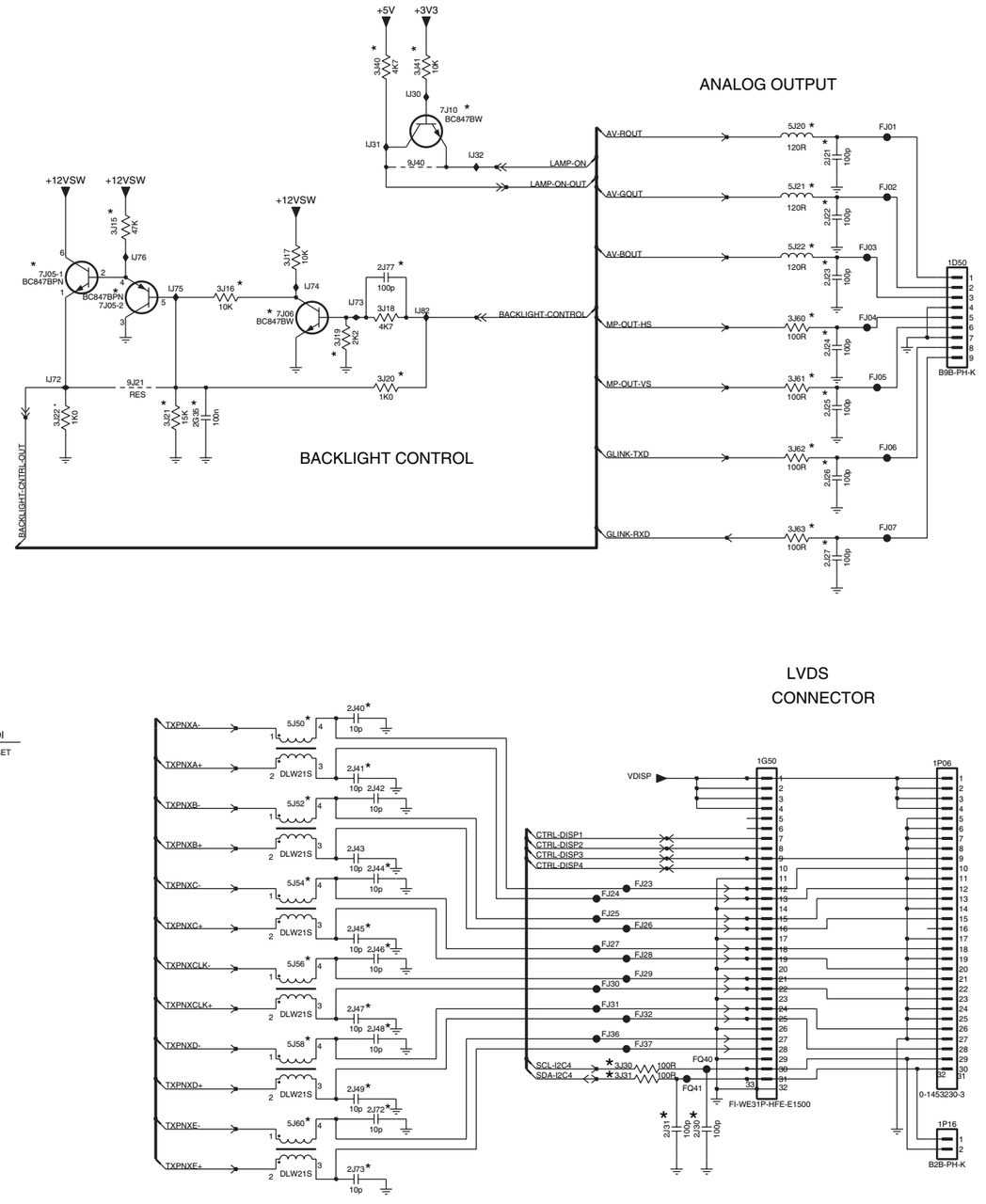

3104 313 6095.4

G_16290_116.eps
150206

1D50 C13 FJ10 G5
1G50 F12 FJ12 F5
1P06 F13 FJ13 B5
1P16 I13 FJ22 F5
2G35 D8 FJ23 G11
2J21 B12 FJ24 G11
2J22 B12 FJ25 G11
2J23 C12 FJ26 G11
2J24 C12 FJ27 H11
2J25 D12 FJ28 H11
2J26 D12 FJ29 H11
2J27 E12 FJ30 H11
2J30 I11 FJ31 H11
2J31 I11 FJ32 H11
2J37 H4 FJ36 H11
2J38 H4 FJ37 H11
2J40 F9 FQ40 H11
2J41 F9 FQ41 I11
2J42 F9 IJ14 C2
2J43 G9 IJ15 D2
2J44 G9 IJ16 D3
2J45 G9 IJ18 G2
2J46 H9 IJ20 G2
2J47 H9 IJ23 H2
2J48 H9 IJ30 B9
2J49 I9 IJ31 B9
2J57 D4 IJ32 B10
2J61 D5 IJ68 D4
2J64 H5 IJ69 D4
2J69 H5 IJ70 D3
2J71 B5 IJ71 H2
2J72 I9 IJ72 D7
2J73 I9 IJ73 C9
2J76 D2 IJ74 C9
2J77 C9 IJ75 C8
3J15 B7 IJ76 C7
3J16 C8 IJ80 C4
3J17 C8 IJ81 H3
3J18 C9 IJ82 C9
3J19 C9
3J20 D9
3J21 D8
3J22 D7
3J23 G2
3J25 D3
3J28 D4
3J30 H11
3J31 I11
3J40 A9
3J41 A9
3J42 F4
3J43 F4
3J44 F5
3J51 H2
3J52 H4
3J55 H2
3J56 I3
3J60 C12
3J61 D12
3J62 D12
3J63 E12
3J86 C4
3J88 F5
3J91 G2
3J92 C2
3J94 D4
3J99 D2
5J10 B4
5J11 B4
5J12 B4
5J20 B12
5J21 B12
5J22 C12
5J50 F9
5J52 G9
5J54 G9
5J56 H9
5J58 H9
5J60 I9
6J01 D2
6J06 C5
7J04 B3
7J05-1 C7
7J05-2 C7
7J06 C8
7J07 D4
7J08 C3
7J09 I3
7J10 B10
9J21 D7
9J30 C1
9J31 C1
9J40 B9
FJ01 B13
FJ02 B13
FJ03 C13
FJ04 C13
FJ05 D13
FJ06 D13
FJ07 E13
FJ09 G5

SSB: Viper: Control

0H00 B10	1H00 A2	2H06 G10	3H04 A13	3H11 D1	3H24 F7	3H54 E4	3H70 E8	3H75 A2	3H80-4 C8	3H84 E8	3H90 B1	3H99 B4	3Q12 B4	3Q17 H7	3Q22 F13	3Q48 A4	6H01 E1	6H11 H14	9H04 B1	9H13 C1	FH12 H7	FQ04 H14	FQ22 C1	IH09 D1	IQ16 F10	IQ25 G7
0H02 B11	1H20 B10	2H07 G10	3H05 A13	3H16 C3	3H25 F7	3H55 E4	3H71 C1	3H79 A8	3H81-1 D8	3H85 E1	3H94 H7	3Q03 B2	3Q13 B4	3Q18 H8	3Q23 H10	3Q52 D4	6H03 F1	6H12 H14	9H05 F4	9H15 F3	FQ00 G15	FQ10 F1	FQ23 C1	IH16 F6	IQ17 F13	IQ27 E7
0H05 B10	1M00 A11	2H08 A1	3H06 A10	3H17 C3	3H31 E1	3H56 E4	3H72 D7	3H80-1 D8	3H81-2 C8	3H86 E8	3H95 H7	3Q04 B2	3Q14 B4	3Q19 F13	3Q24 E10	5H02 G11	6H07-1 G13	7V00-5 A5	9H06 E3	9H16 B4	FQ01 G14	FQ16 F11	FQ50 C4	IQ03 G10	IQ22 F6	IQ28 F7
0H09 C10	1M60 G15	2H09 A1	3H08 C3	3H22 B13	3H40 E1	3H57 D4	3H73 A8	3H80-2 C8	3H81-3 D8	3H88 E8	3H97 G1	3Q10 A4	3Q15 B4	3Q20 G11	3Q27 B1	5H03 F13	6H07-2 G12	9H02 F3	9H07 C1	AH10 A8	FQ02 H15	FQ19 C1	FQ52 F4	IQ04 G10	IQ23 G7	IQ30 E1
0H10 C10	1MM3 C11	2Q69 G14	3H10 D1	3H23 B13	3H41 F1	3H69 C3	3H74 A8	3H80-3 D8	3H82 A2	3H89 E10	3H98 B4	3Q11 A4	3Q16 H10	3Q21 G11	3Q29 F13	6H00 H7	6H10 G14	9H03 B4	9H08 C1	AH11 A2	FQ03 E4	FQ21 C1	FQ53 F4	IQ15 F10	IQ24 G7	

B5A VIPER: CONTROL

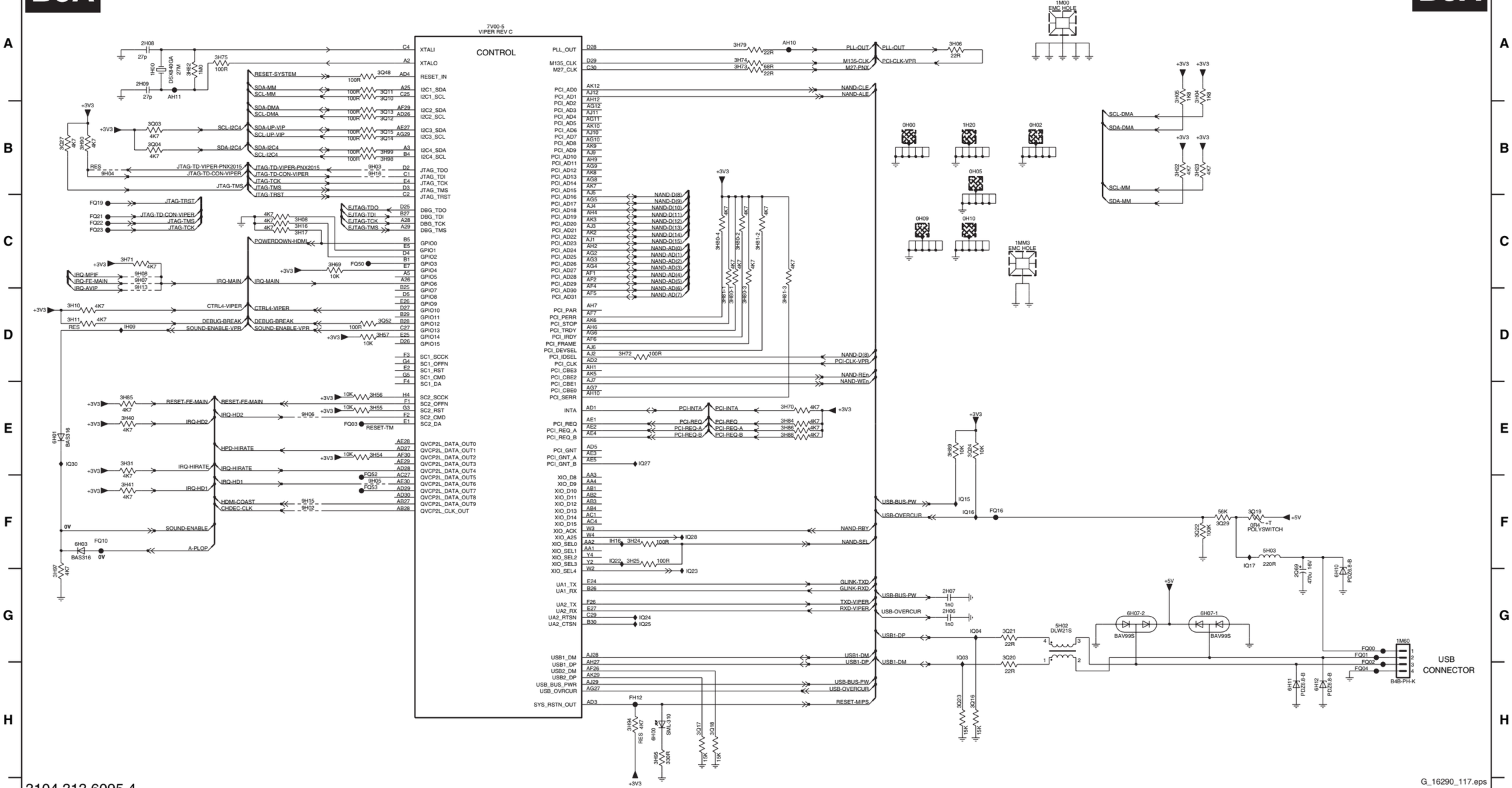

3104 313 6095.4

G_16290_117.eps
150206

SSB: Viper: Main Memory

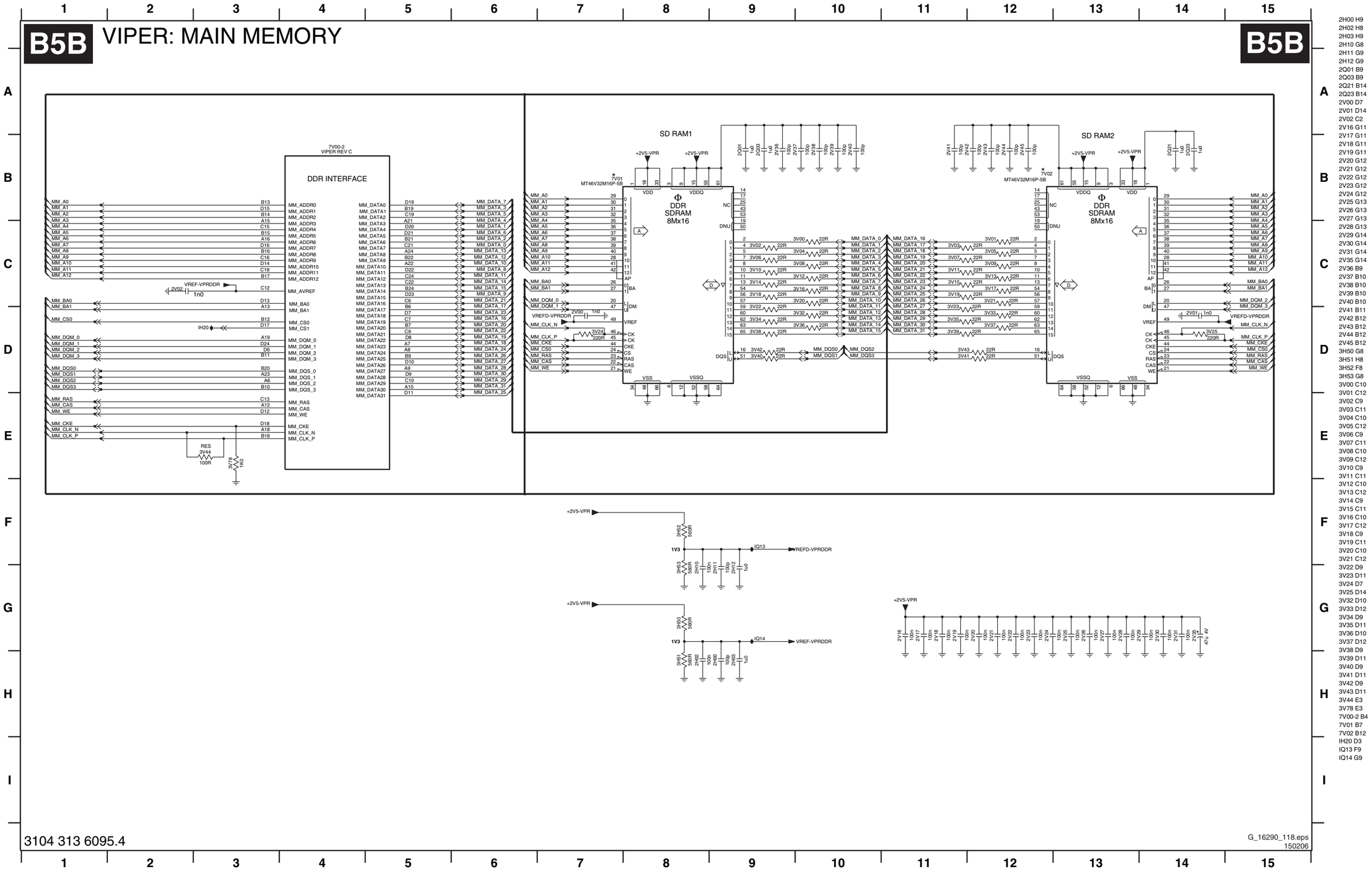

2H00 H9
2H02 H8
2H03 H9
2H10 G8
2H11 G9
2H12 G9
2Q01 B9
2Q03 B9
2Q21 B14
2Q23 B14
2V00 D7
2V01 D14
2V02 C2
2V16 G11
2V17 G11
2V18 G11
2V19 G11
2V20 G12
2V21 G12
2V22 G12
2V23 G12
2V24 G12
2V25 G13
2V26 G13
2V27 G13
2V28 G13
2V29 G14
2V30 G14
2V31 G14
2V35 G14
2V36 B9
2V37 B10
2V38 B10
2V39 B10
2V40 B10
2V41 B11
2V42 B12
2V43 B12
2V44 B12
2V45 B12
3H50 G8
3H51 H8
3H52 F8
3H53 G8
3V00 C10
3V01 C12
3V02 C9
3V03 C11
3V04 C10
3V05 C12
3V06 C9
3V07 C11
3V08 C10
3V09 C12
3V10 C9
3V11 C11
3V12 C10
3V13 C12
3V14 C9
3V15 C11
3V16 C10
3V17 C12
3V18 C9
3V19 C11
3V20 C10
3V21 C12
3V22 D9
3V23 D11
3V24 D7
3V25 D14
3V32 D10
3V33 D12
3V34 D9
3V35 D11
3V36 D10
3V37 D12
3V38 D9
3V39 D11
3V40 D9
3V41 D11
3V42 D9
3V43 D11
3V44 E3
3V78 E3
7V00-2 B4
7V01 B7
7V02 B12
IH20 D3
IQ13 F9
IQ14 G9

SSB: Viper: A/V + Tunnelbus

B5C VIPER: A/V + TUNNELBUS

B5C

7V00-1
VIPER REV C

AUDIO/VIDEO

DV1F-DATA0 AG13 DV1_DATA0
DV1F-DATA1 AH13 DV1_DATA1
DV1F-DATA2 AJ13 DV1_DATA2
DV1F-DATA3 AK13 DV1_DATA3
DV1F-DATA4 AG14 DV1_DATA4
DV1F-DATA5 AJ14 DV1_DATA5
DV1F-DATA6 AG15 DV1_DATA6
DV1F-DATA7 AH15 DV1_DATA7
DV1F-DATA8_ERR AJ15 DV1_DATA8
DV1F-DATA9_SOP AK15 DV1_DATA9
DV1F-VALID AG16 DV1_VALID
DV1F-CLK AH16 DV1_CLK

+3V3
3H28 4K7 DV1F-VALID

AJ16 DV2_DATA0
AK16 DV2_DATA1
AJ17 DV2_DATA2
AG17 DV2_DATA3
AK18 DV2_DATA4
AJ18 DV2_DATA5
AH18 DV2_DATA6
AG19 DV2_DATA7
AK19 DV2_VALID
AH19 DV2_CLK
AJ19 DV2_ERR
AG18 DV2_SOP

3H32 4K7 DV2A-VALID
DV2A-VALID
DV2A-CLK

DV3F-DATA2_0 AK24 DV3_DATA0
DV3F-DATA3_1 AJ24 DV3_DATA1
DV3F-DATA4_2 AK25 DV3_DATA2
DV3F-DATA5_3 AG23 DV3_DATA3
DV3F-DATA6_4 AH24 DV3_DATA4
DV3F-DATA7_5 AJ25 DV3_DATA5
DV3F-DATA8_6 AK26 DV3_DATA6
DV3F-DATA9_7 AG24 DV3_DATA7
DV3F-VALID AJ26 DV3_VALID
DV3F-CLK AG25 DV3_CLK
DV3F-DATA1_ERR AF24 DV3_ERR
DV3F-DATA0_SOP AH25 DV3_SOP

3H18 4K7 DV3F-VALID

IH10 AG26 DV_FREF
IH11 AK28 DV_VREF
IH15 AJ27 DV_HREF

IH01 AA30 I2S_IN1_SD
AA29 I2S_IN1_WS
AA28 I2S_IN1_SCK
IH03 AB30 I2S_IN1_OSCLK

I2S-MAIN-ND W28 I2S_IN2_SD
W27 I2S_IN2_WS
Y29 I2S_IN2_SCK
IH00 Y27 I2S_IN2_OSCLK

SPDIF-HDMI AA27 SPDIF_IN2
AC30 SPDIF_IN1

QVCP5L_DATA_OUT0 J28 68R 3Q28-4 DV-BOUT-0
QVCP5L_DATA_OUT1 J27 68R 3Q28-3 DV-BOUT-1
QVCP5L_DATA_OUT2 H30 68R 3Q28-2 DV-BOUT-2
QVCP5L_DATA_OUT3 H27 68R 3Q28-1 DV-BOUT-3
QVCP5L_DATA_OUT4 G30 68R 3Q34-4 DV-BOUT-4
QVCP5L_DATA_OUT5 G29 68R 3Q34-3 DV-BOUT-5
QVCP5L_DATA_OUT6 G28 68R 3Q34-2 DV-BOUT-6
QVCP5L_DATA_OUT7 G27 68R 3Q34-1 DV-BOUT-7
QVCP5L_DATA_OUT8 F30 68R 3Q26-4 DV-BOUT-8
QVCP5L_DATA_OUT9 F29 68R 3Q26-3 DV-BOUT-9
QVCP5L_DATA_OUT10 M28 68R 3Q25-2 DV-GOUT-0
QVCP5L_DATA_OUT11 M27 68R 3Q25-1 DV-GOUT-1
QVCP5L_DATA_OUT12 L29 68R 3Q44-4 DV-GOUT-2
QVCP5L_DATA_OUT13 L27 68R 3Q44-3 DV-GOUT-3
QVCP5L_DATA_OUT14 K30 68R 3Q44-2 DV-GOUT-4
QVCP5L_DATA_OUT15 K29 68R 3Q44-1 DV-GOUT-5
QVCP5L_DATA_OUT16 K28 68R 3Q08-4 DV-GOUT-6
QVCP5L_DATA_OUT17 K27 68R 3Q08-3 DV-GOUT-7
QVCP5L_DATA_OUT18 J30 68R 3Q08-2 DV-GOUT-8
QVCP5L_DATA_OUT19 J29 68R 3Q08-1 DV-GOUT-9
QVCP5L_DATA_OUT20 R28 68R 3Q07-4 DV-ROUT-0
QVCP5L_DATA_OUT21 R27 68R 3Q07-3 DV-ROUT-1
QVCP5L_DATA_OUT22 P29 68R 3Q07-2 DV-ROUT-2
QVCP5L_DATA_OUT23 P27 68R 3Q07-1 DV-ROUT-3
QVCP5L_DATA_OUT24 N30 68R 3Q05-4 DV-ROUT-4
QVCP5L_DATA_OUT25 N29 68R 3Q05-3 DV-ROUT-5
QVCP5L_DATA_OUT26 N28 68R 3Q05-2 DV-ROUT-6
QVCP5L_DATA_OUT27 N27 68R 3Q05-1 DV-ROUT-7
QVCP5L_DATA_OUT28 M30 68R 3Q25-4 DV-ROUT-8
QVCP5L_DATA_OUT29 M29 68R 3Q25-3 DV-ROUT-9
QVCP5L_CLK_OUT E30 68R 3H02 DV-CLKIN
QVCP5L_VSYNC F28 68R 3Q02-3 DV-OUT-VS
QVCP5L_HSYNC F27 68R 3Q02-4 DV-OUT-HS
QVCP5L_AUX1 G26 68R 3Q02-1 DV-OUT-FFIELD
QVCP5L_AUX2 E29 68R 3Q02-2 DV-OUT-DE

DAC_IRSET AH30 IH08 3H19 1K0
DAC_RDUMPY AF27 IH07 3H21 39R
DAC_RDUMPC AH29 IH06 3H20 39R
DAC_CVBS AG28
DAC_CHROMA AJ30

TS_DATA0 AJ22
TS_DATA1 AG21
TS_DATA2 AK22
TS_DATA3 AH21
TS_DATA4 AJ21
TS_DATA5 AK21
TS_DATA6 AG20
TS_DATA7 AJ20
TS_VALID AK23
TS_SOP AH22
TS_CLK AG22 3Q09 33R CHDEC-CLK

I2S_OUT1_SD0 U27 I2S-SUB-D
I2S_OUT1_SD1 V30 3H07 22R BACKLIGHT-CONTROL
I2S_OUT1_SD2 V29 CTRL1-VIPER
I2S_OUT1_SD3 V28
I2S_OUT1_WS V27
I2S_OUT1_SCK W30
I2S_OUT1_OSCLK W29 IH04

I2S_OUT2_SD0 T28 I2S-MCH-LR
I2S_OUT2_SD1 T27 I2S-MCH-CSW
I2S_OUT2_SD2 R30 I2S-MCH-SLR
I2S_OUT2_SD3 R29 I2S-MAIN-D
I2S_OUT2_WS T29 I2S-WS-MAIN
I2S_OUT2_SCK T30 I2S-BCLK-MAIN
I2S_OUT2_OSCLK U29 IH05

SPDIF_OUT AB29 SPDIF-OUT1

7V00-4
VIPER REV C

TUNNELBUS

TUN-VIPER-TX-DATA0 3Q36-4 33R N2 TUN_TX_DATA0
TUN-VIPER-TX-DATA1 3Q36-3 33R N1 TUN_TX_DATA1
TUN-VIPER-TX-DATA2 3Q36-2 33R P4 TUN_TX_DATA2
TUN-VIPER-TX-DATA3 3Q36-1 33R P2 TUN_TX_DATA3
TUN-VIPER-TX-DATA4 3Q35-4 33R R1 TUN_TX_DATA4
TUN-VIPER-TX-DATA5 3Q35-3 33R R2 TUN_TX_DATA5
TUN-VIPER-TX-DATA6 3Q35-2 33R R3 TUN_TX_DATA6
TUN-VIPER-TX-DATA7 3Q35-1 33R R4 TUN_TX_DATA7
TUN-VIPER-TX-DATA8 3Q37-4 33R T3 TUN_TX_DATA8
TUN-VIPER-TX-DATA9 3Q37-3 33R T4 TUN_TX_DATA9
TUN-VIPER-TX-DATA10 3Q37-2 33R U2 TUN_TX_DATA10
TUN-VIPER-TX-DATA11 3Q38-4 33R U4 TUN_TX_DATA11
TUN-VIPER-TX-DATA12 3Q37-1 33R V1 TUN_TX_DATA12
TUN-VIPER-TX-DATA13 3Q38-3 33R V2 TUN_TX_DATA13
TUN-VIPER-TX-DATA14 3Q38-2 33R V3 TUN_TX_DATA14
TUN-VIPER-TX-DATA15 3Q38-1 33R V4 TUN_TX_DATA15

TUN-VIPER-TX-CLKP 3Q39 33R T1 TUN_TX_CLOCKP
TUN-VIPER-TX-CLKN 3Q40 33R T2 TUN_TX_CLOCKN
TUN-VIPER-TX-BUSY W1 TUN_TX_BUSY

VREF-PNX K2 TUN_AVREF
2H01 1n0

TUN_RX_DATA0 G2 TUN-VIPER-RX-DATA0
TUN_RX_DATA1 G1 TUN-VIPER-RX-DATA1
TUN_RX_DATA2 J3 TUN-VIPER-RX-DATA2
TUN_RX_DATA3 H1 TUN-VIPER-RX-DATA3
TUN_RX_DATA4 K4 TUN-VIPER-RX-DATA4
TUN_RX_DATA5 J2 TUN-VIPER-RX-DATA5
TUN_RX_DATA6 J1 TUN-VIPER-RX-DATA6
TUN_RX_DATA7 K1 TUN-VIPER-RX-DATA7
TUN_RX_DATA8 L4 TUN-VIPER-RX-DATA8
TUN_RX_DATA9 L2 TUN-VIPER-RX-DATA9
TUN_RX_DATA10 M4 TUN-VIPER-RX-DATA10
TUN_RX_DATA11 M3 TUN-VIPER-RX-DATA11
TUN_RX_DATA12 M2 TUN-VIPER-RX-DATA12
TUN_RX_DATA13 M1 TUN-VIPER-RX-DATA13
TUN_RX_DATA14 N4 TUN-VIPER-RX-DATA14
TUN_RX_DATA15 TUN-VIPER-RX-DATA15

TUN_RX_CLOCKP K3 TUN-VIPER-RX-CLKP
TUN_RX_BUSY N3 3Q41 33R TUN-VIPER-RX-BUSY

2H01 I6
3H02 C9
3H07 E8
3H18 C3
3H19 C9
3H20 D9
3H21 C9
3H28 A3
3H32 B3
3Q02-1 C9
3Q02-2 C9
3Q02-3 C9
3Q02-4 C8
3Q05-1 C9
3Q05-2 C8
3Q05-3 C9
3Q05-4 B9
3Q07-1 B8
3Q07-2 B9
3Q07-3 B9
3Q07-4 B8
3Q08-1 B9
3Q08-2 B9
3Q08-3 B8
3Q08-4 B9
3Q09 E8
3Q25-1 B8
3Q25-2 A9
3Q25-3 C8
3Q25-4 C9
3Q26-3 A9
3Q26-4 A8
3Q28-1 A9
3Q28-2 A8
3Q28-3 A9
3Q28-4 A9
3Q34-1 A9
3Q34-2 A9
3Q34-3 A8
3Q34-4 A9
3Q35-1 H6
3Q35-2 H5
3Q35-3 H6
3Q35-4 H6
3Q36-1 H5
3Q36-2 H6
3Q36-3 H6
3Q36-4 H5
3Q37-1 H5
3Q37-2 H6
3Q37-3 H5
3Q37-4 H6
3Q38-1 I5
3Q38-2 I6
3Q38-3 H6
3Q38-4 H6
3Q39 I6
3Q40 I6
3Q41 I9
3Q44-1 B9
3Q44-2 B8
3Q44-3 B9
3Q44-4 B9
7V00-1 A6
7V00-4 G7
IH00 D4
IH01 D4
IH03 D4
IH04 E8
IH05 F8
IH06 D9
IH07 C9
IH08 C9
IH10 D4
IH11 D4
IH15 D4

G_16290_119.eps
150206

SSB: Viper: Supply

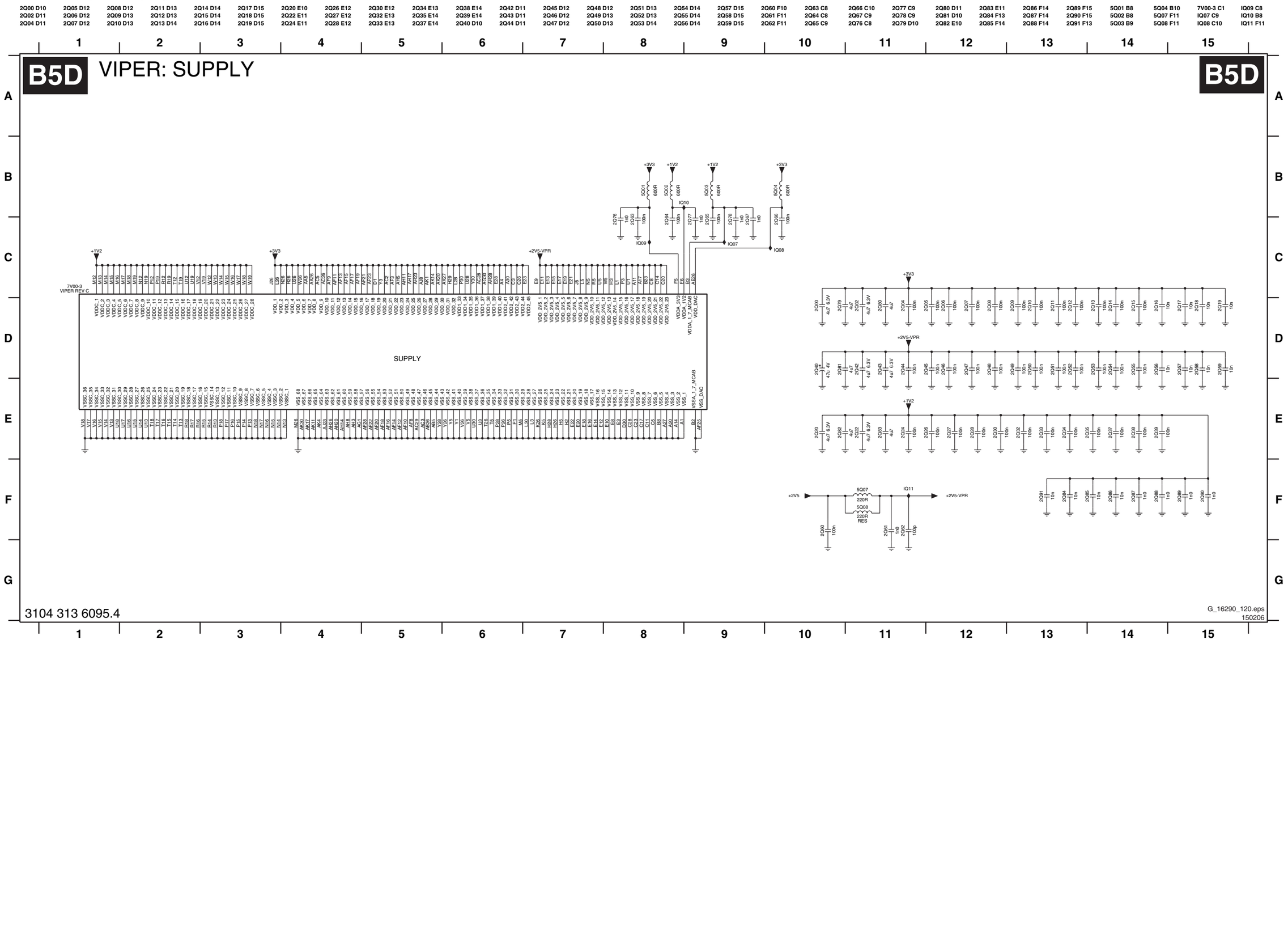

SSB: Viper: EEPROM

B5E VIPER: EEPROM

B5E

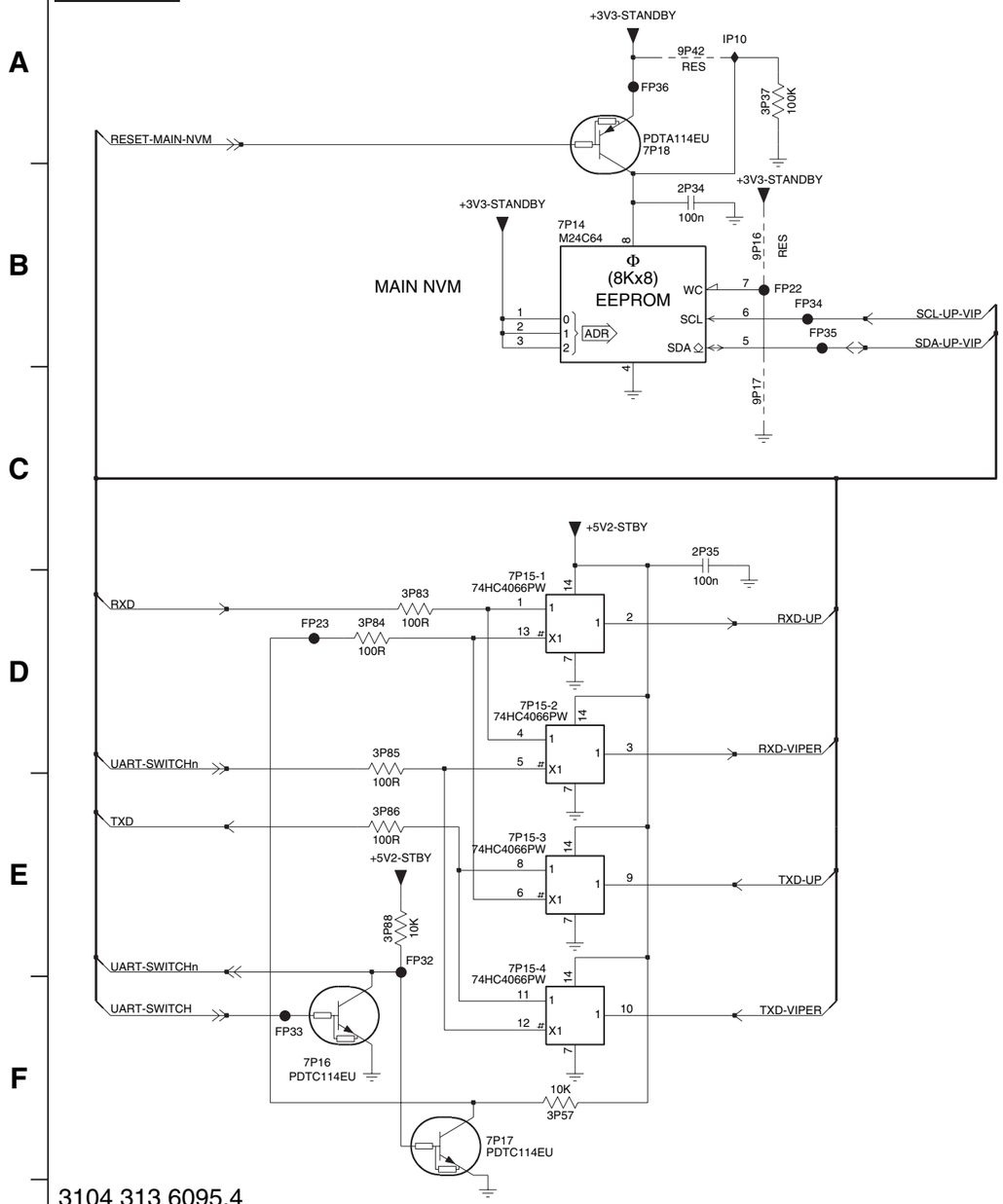

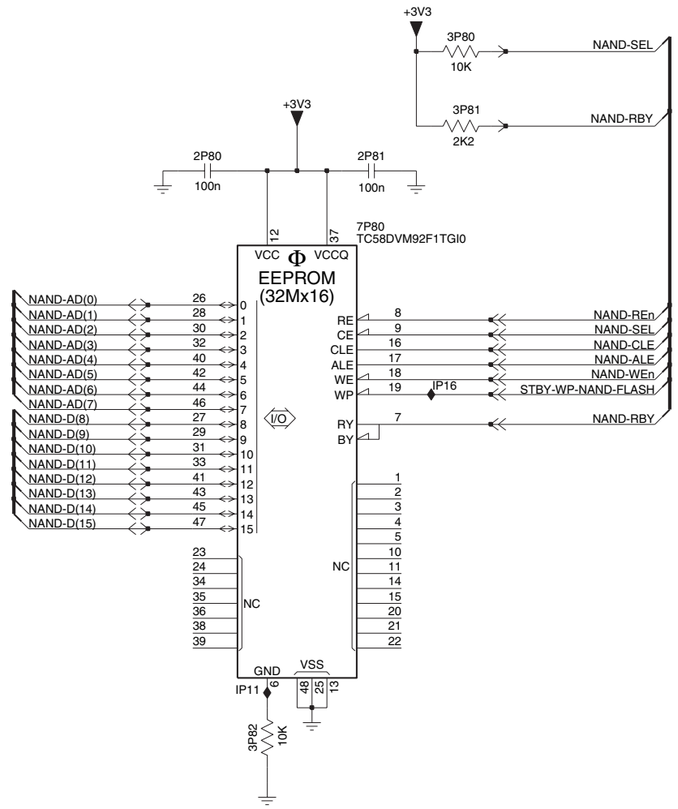

2P34 B3
2P35 C3
2P80 C7
2P81 C8
3P37 A4
3P57 F3
3P80 B8
3P81 C8
3P82 F7
3P83 D2
3P84 D2
3P85 D2
3P86 E2
3P88 E2
7P14 B3
7P15-1 D2
7P15-2 D3
7P15-3 E2
7P15-4 E2
7P16 F1
7P17 F2
7P18 A3
7P80 C8
9P16 B4
9P17 C4
9P42 A3
FP22 B4
FP23 D1
FP32 E2
FP33 F1
FP34 B4
FP35 B4
FP36 A3
IP10 A3
IP11 E7
IP16 D8

G_16290_121.eps
150206

SSB: Miscellaneous

B5F MISCELLANEOUS

B5F

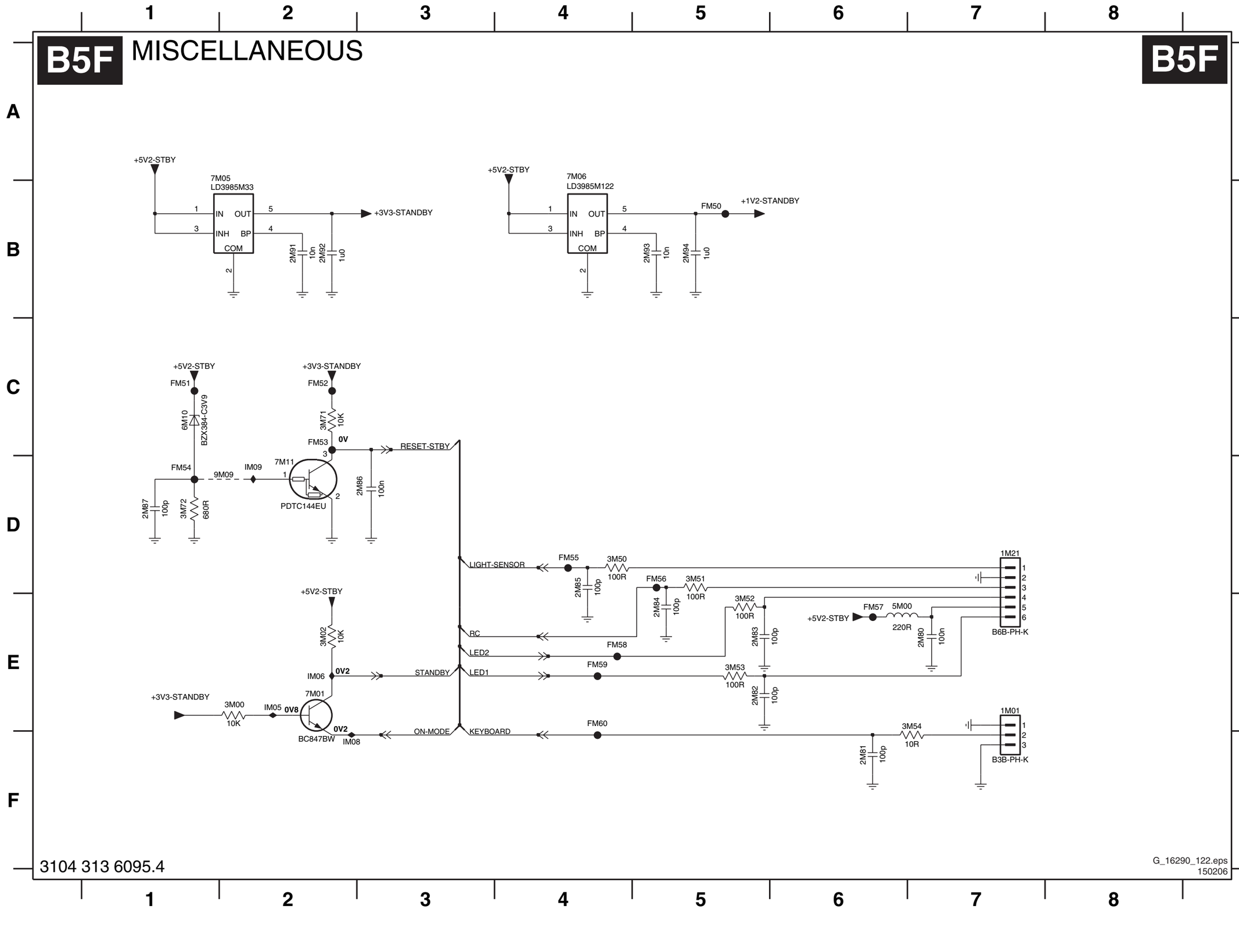

1M01 E7
1M21 D7
2M80 E7
2M81 F6
2M82 E5
2M83 E5
2M84 E5
2M85 D4
2M86 D3
2M87 D1
2M91 B2
2M92 B2
2M93 B5
2M94 B5
3M00 E2
3M02 E2
3M50 D4
3M51 D5
3M52 E5
3M53 E5
3M54 E7
3M71 C2
3M72 D1
5M00 E6
6M10 C1
7M01 E2
7M05 A1
7M06 A4
7M11 D2
9M09 D2
FM50 B5
FM51 C1
FM52 C2
FM53 C2
FM54 D1
FM55 D4
FM56 D5
FM57 E6
FM58 E4
FM59 E4
FM60 E4
IM05 E2
IM06 E2
IM08 F2
IM09 D2

G_16290_122.eps
150206

SSB: Video DAC

B6 VIDEO-DAC

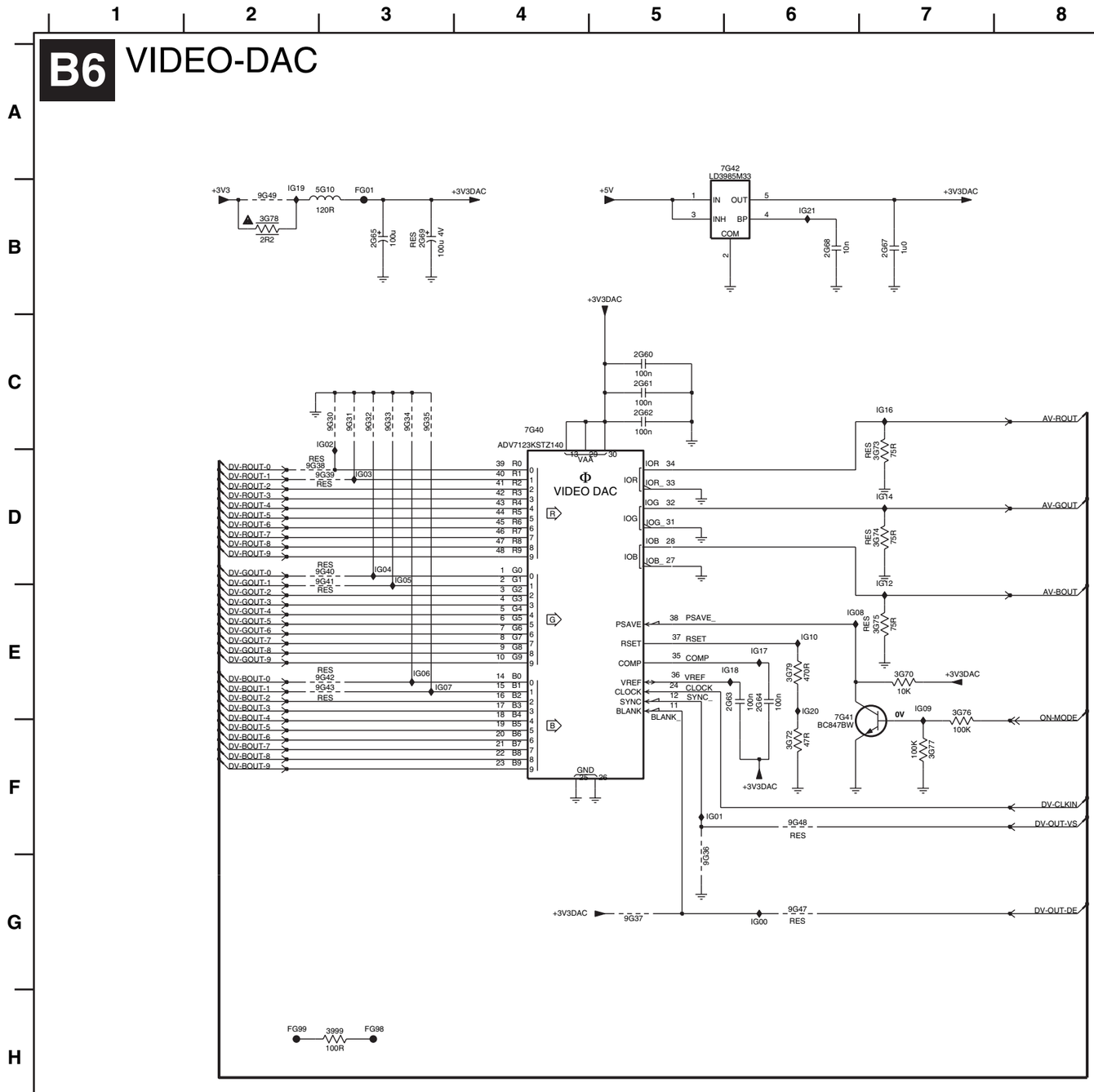

2G60 C5
2G61 C5
2G62 C5
2G63 E6
2G64 E6
2G65 B3
2G67 B7
2G68 B6
2G69 B3
3999 H3
3G70 E7
3G72 F6
3G73 D7
3G74 D7
3G75 E7
3G76 E7
3G77 F7
3G78 B2
3G79 E6
5G10 B3
7G40 C4
7G41 F6
7G42 A6
9G30 C3
9G31 C3
9G32 C3
9G33 C3
9G34 C3
9G35 C3
9G36 G5
9G37 G5
9G38 D2
9G39 D3
9G40 D3
9G41 D3
9G42 E3
9G43 E3
9G47 G6
9G48 F6
9G49 B2
FG01 B3
FG98 H3
FG99 H2
IG00 G6
IG01 F5
IG02 C3
IG03 D3
IG04 D3
IG05 D3
IG06 E3
IG07 E3
IG08 E6
IG09 E7
IG10 E6
IG12 D7
IG14 D7
IG16 C7
IG17 E6
IG18 E6
IG19 B2
IG20 E6
IG21 B6
cG10 D10
cG11 D10
cG12 D10
cG13 D10
cG14 D10
cG15 D10
cG16 D10
cG17 D10
cG18 D10
cG19 D10
cG20 D10
cG21 E10
cG22 E10
cG23 E10
cG24 E10
cG25 E10
cG26 E10
cG27 E10
cG28 E10
cG29 E10
cG30 E10
cG31 E10
cG32 F10
cG33 F10
cG34 F10
cG35 F10
cG36 F10
cG37 F10
cG38 F10
cG39 F10
cG40 F10
cG41 F10
cG42 F10
cG43 G10
cG44 G10

G_16290_123.eps
150206

SSB: HDMI: Supply

B7A HDMI + SUPPLY

B7A

HDMI CONNECTOR 1

DDC NVM HDMI 1

1B00 C3
1B03 C4
1B04 C4
1B20 I5
1I06 B1
2B00 C4
2B01 C5
2B03 I4
2B04 I6
2B10 B10
2B11 C9
2B12 C11
2B13 C11
2B14 C12
2B15 C12
2B16 C12
2B17 C12
2B18 E13
2B19 E13
2B20 E13
2B21 E13
2B22 E11
2B23 E11
2B24 E12
2B25 E12
2B26 D10
2B27 D10
2B31 G9
2B32 F10
2B33 F11
2B35 F12
2B36 F12
2B37 F12
2B38 F13
2B39 F13
2B40 I10
2B41 I10
2B45 I9
2B46 G10
3B02 C6
3B03 C7
3B04 D5
3B05 D6
3B06 D6
3B07 D5
3B08 D6
3B17 H5
3B18 I6
3B19 I4
3B20 I4
5B00 C5
5B10 C9
5B11 D9
5B12 D9
5B17 B9
5B18 F10
6B20 I4
6B21 I4
7B02 D4
7B20 I5
7B25 F9
7B45 H10
9B00 C2
9B38 H10
FB04 D5
FB09 C2
FB10 C2
FB11 C2
FB12 C2
FB13 C2
FB14 D2
FB16 C10
FB17 B10
FB18 D10
FB19 D10
FB20 F10
FB21 F11
FB45 H10
IB00 C7
IB02 C6
IB11 C5
IB19 H5
IB20 I6

3104 313 6095.4

G_16290_124.eps
150206

SSB: HDMI: I/O + Control

B7B HDMI: I/O + CONTROL

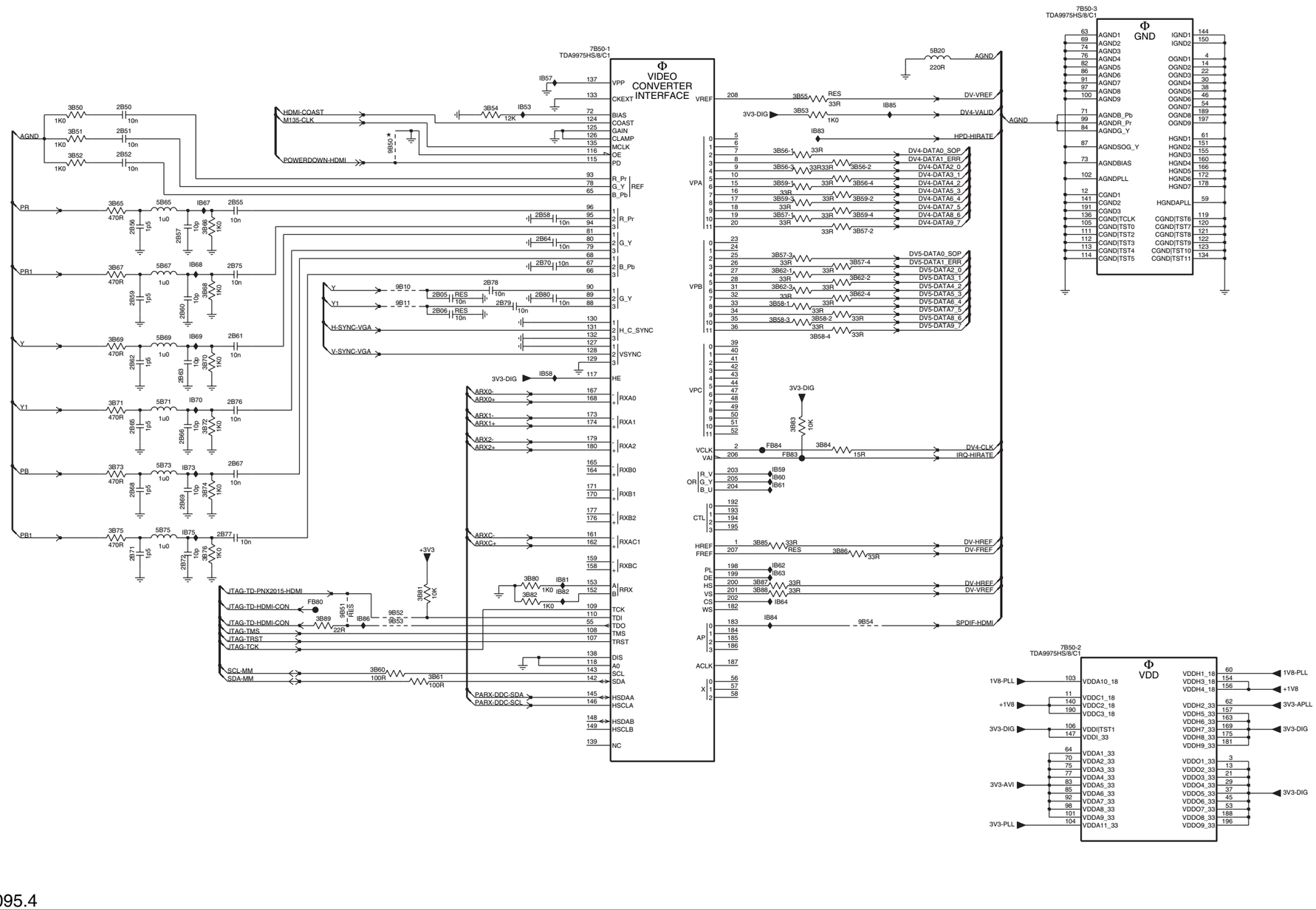

3104 313 6095.4

G_16290_125.eps
150206

2B05 D5 IB58 E6
2B06 D5 IB59 F8
2B50 C2 IB60 F8
2B51 C2 IB61 F8
2B52 C2 IB62 G8
2B55 C3 IB63 G8
2B56 D2 IB64 G8
2B57 D3 IB67 C3
2B58 D6 IB68 D3
2B59 D2 IB69 E3
2B60 D3 IB70 E3
2B61 E3 IB73 F3
2B62 E2 IB75 F3
2B63 E3 IB81 G6
2B64 D6 IB82 G6
2B65 E2 IB83 C8
2B66 F3 IB84 G8
2B67 F3 IB85 C9
2B68 F2 IB86 G4
2B69 F3
2B70 D6
2B71 G2
2B72 G3
2B75 D3
2B76 E3
2B77 F3
2B78 D5
2B79 D6
2B80 D6
3B50 C2
3B51 C2
3B52 C2
3B53 C8
3B54 C5
3B55 B8
3B56-1 C8
3B56-2 C9
3B56-3 C8
3B56-4 C9
3B57-1 D8
3B57-2 D9
3B57-3 D8
3B57-4 D9
3B58-1 D8
3B58-2 D8
3B58-3 D8
3B58-4 E8
3B59-1 C8
3B59-2 C9
3B59-3 C8
3B59-4 D9
3B60 H4
3B61 H5
3B62-1 D8
3B62-2 D9
3B62-3 D8
3B62-4 D9
3B65 C2
3B66 D3
3B67 D2
3B68 D3
3B69 E2
3B70 E3
3B71 E2
3B72 E3
3B73 F2
3B74 F3
3B75 F2
3B76 G3
3B80 G6
3B81 G5
3B82 G6
3B83 E8
3B84 F8
3B85 F8
3B86 G9
3B87 G8
3B88 G8
3B89 G4
5B20 B9
5B65 C2
5B67 D2
5B69 E2
5B71 E2
5B73 F2
5B75 F2
7B50-1 B6
7B50-2 G11
7B50-3 B11
9B10 D5
9B11 D5
9B50 C4
9B51 G4
9B52 G5
9B53 G5
9B54 G9
FB80 G4
FB83 F8
FB84 F8
IB53 C6
IB57 B6

SSB: Analog I/O

B7C ANALOG I/O **B7C**

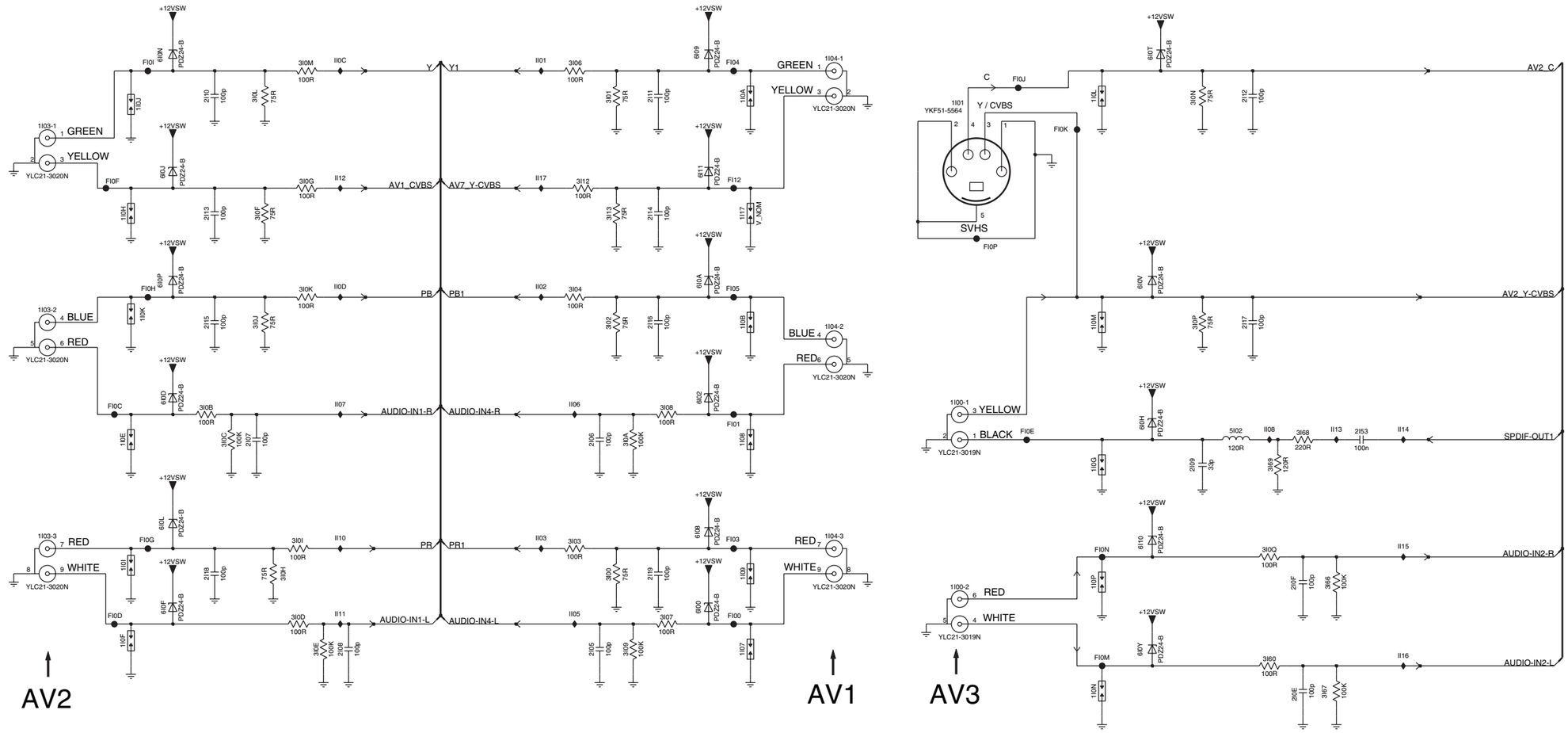

3104 313 6095.4

G_16290_126.eps
150206

1I00 E9
1I00 G9
1I01 C9
1I03-1 C1
1I03-2 E1
1I03-3 G1
1I04-1 B8
1I04-2 E8
1I04-3 G8
1I07 G7
1I08 F7
1I09 G7
1I0A C7
1I0B E7
1I0E F2
1I0F G2
1I0G F10
1I0H D2
1I0I G2
1I0J C2
1I0K E2
1I0L C10
1I0M E10
1I0N H10
1I0P G10
1I17 D7
2I05 G6
2I06 F6
2I07 F3
2I08 G4
2I09 F11
2I0E H12
2I0F G12
2I10 C3
2I11 C6
2I12 C11
2I13 D3
2I14 D6
2I15 E3
2I16 E6
2I17 E11
2I18 G3
2I19 G6
2I53 F12
3I00 G6
3I01 C6
3I02 E6
3I03 G6
3I04 D6
3I06 B6
3I07 G6
3I08 E6
3I09 G6
3I0A F6
3I0B E3
3I0C F3
3I0D G3
3I0E G3
3I0F D3
3I0G C3
3I0H G3
3I0I G3
3I0J E3
3I0K D3
3I0L C3
3I0M B3
3I0N C11
3I0P E11
3I0Q G12
3I12 C6
3I13 D6
3I60 H12
3I66 G12
3I67 H12
3I68 F12
3I69 F12
5I02 F11
6I00 G7
6I02 E7
6I08 F7
6I09 B7
6I0A D7
6I0D E2
6I0F G2
6I0H F10
6I0J C2
6I0L F2
6I0N B2
6I0P D2
6I0T B11
6I0V D11
6I0Y G11
6I10 G11
6I11 C7
FI00 G7
FI01 F7
FI03 G7
FI04 B7
FI05 D7
FI0C E2
FI0D G2
FI0E F10
FI0F C2
FI0G G2
FI0H D2
FI0I B2
FI0J C9
FI0K C10
FI0M H10
FI0N G10
FI0P D9
FI12 C7
II01 B5
II02 D5
II03 G5
II05 G6
II06 E6
II07 E4
II08 F12
II0C B4
II0D D4
II10 G4
II11 G4
II12 C4
II13 F12
II14 F13
II15 G13
II16 H13
II17 C5

SSB: UART

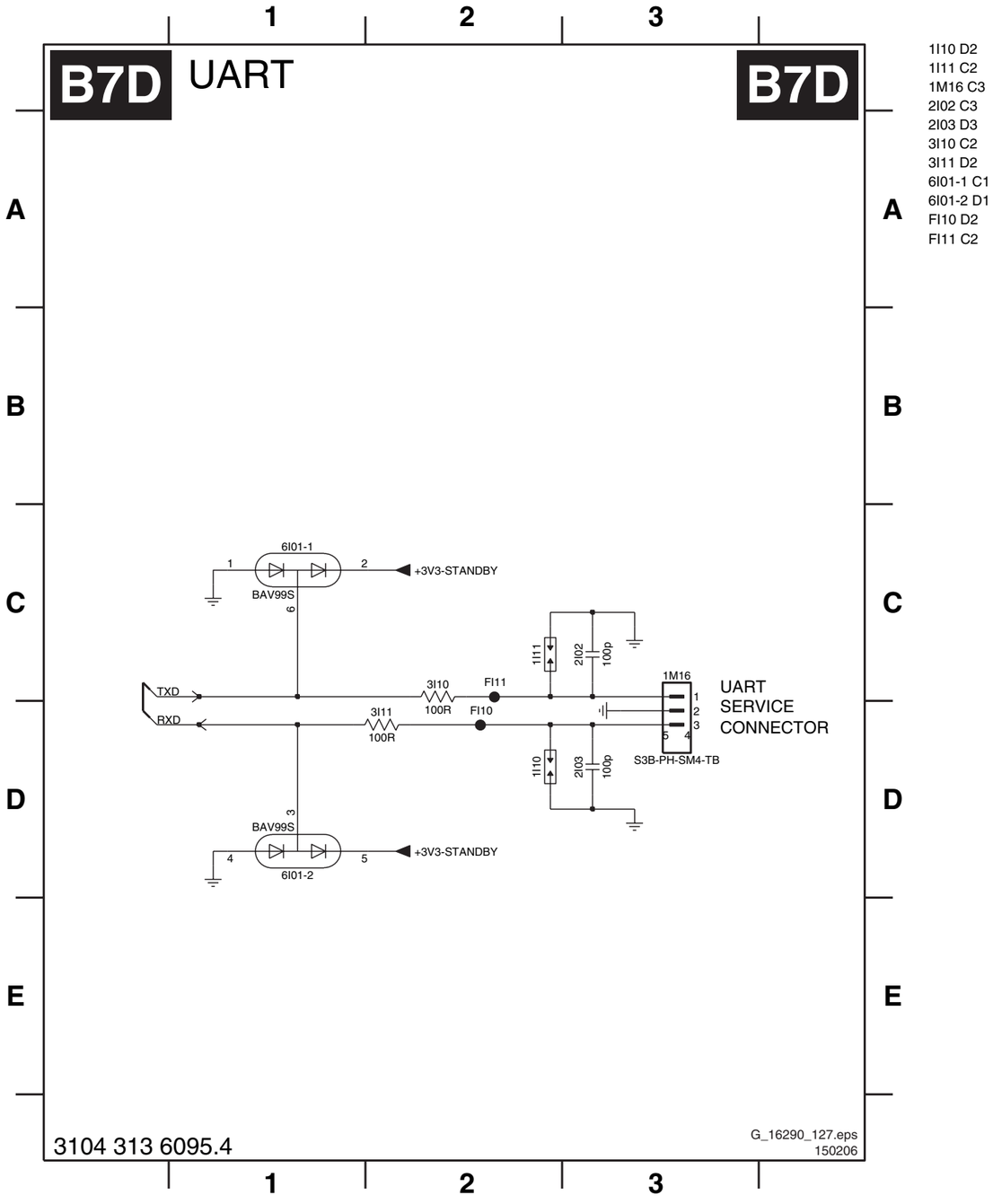

1I10 D2
1I11 C2
1M16 C3
2I02 C3
2I03 D3
3I10 C2
3I11 D2
6I01-1 C1
6I01-2 D1
FI10 D2
FI11 C2

Personal Notes:

E_06532_012.eps
131004

SSB: Audio: Amplifier

1DM1 H8	2D19 F2	2D31 G11	2D42 H7	2D51 C8	2D60 H9	2D70 C4	3D16 B6	3D25 C3	3D39-4 E5	3D46 F6	3D60 F6	3D72 H11	3D82 C7	3D91 E9	5D16 G2	7D11-1 B6	7D18-1 E5	7D24 E2	9D03-3 G6	FD49 B3	ID16 F6	ID28 G4	ID37 G11	ID46 H3	ID57 C3	ID70 B8	ID81 F1	cD04 D15
2D01 C4	2D20 F7	2D32 F6	2D43 H14	2D52 E6	2D61 H9	2D71 G1	3D17 B2	3D26 D3	3D40-1 G11	3D47 F13	3D61 F13	3D73 H3	3D83 C7	3D92 H3	5D18 F6	7D11-2 C5	7D18-2 G5	7D25-1 C8	9D03-4 G6	FD54 B3	ID17 F13	ID29 G12	ID38 G10	ID47 H11	ID60 B4	ID71 C10	ID82 F5	cD05 E15
2D02 C4	2D21 G14	2D35 G2	2D44 H15	2D53 F7	2D62 H9	2D72 F10	3D18 B2	3D34 E3	3D40-2 G11	3D49 E1	3D64 G4	3D74 H10	3D84 B8	3D93 H10	5D19 F14	7D12-1 D4	7D19 F11	7D25-2 B9	9D04-1 F13	FD73 C9	ID18 B5	ID30 C7	ID39 G2	ID48 B6	ID61 D4	ID72 C10	ID83 F5	
2D03 C5	2D22 H14	2D36 G9	2D45 H3	2D54 F14	2D63 C6	3D01 B5	3D19 C5	3D35 E4	3D40-3 E11	3D50 F1	3D65 G11	3D75 B9	3D85 B8	5D10 E7	6D10 B4	7D12-2 C3	7D20 E12	7D26-1 C9	9D04-2 F13	ID10 E7	ID20 F2	ID31 C8	ID40 G7	ID50 B5	ID62 F1	ID74 F9	ID86 F4	
2D11 B2	2D23 E14	2D37 G6	2D46 H10	2D55 F2	2D64 E9	3D10 A3	3D20 C6	3D37 E10	3D40-4 E13	3D51 F9	3D67 H3	3D76 G5	3D86 C9	5D11 E15	6D11 C4	7D14 F4	7D21-1 F12	7D26-2 B10	9D04-3 F13	ID11 E15	ID21 F11	ID32 G5	ID41 G15	ID51 B4	ID63 C7	ID75 F11	ID87 F4	
2D14 E7	2D26 F2	2D38 H2	2D47 H2	2D56 F6	2D65 F9	3D12 A4	3D21 C2	3D38 E11	3D42 C3	3D54 F1	3D68 H3	3D77 E6	3D87 C10	5D12 F6	7D10-1 B3	7D15 E5	7D21-2 F12	7D30 F6	9D04-4 G13	ID12 E11	ID22 F12	ID33 G12	ID42 G3	ID52 B2	ID64 F14	ID76 F11	ID91 C10	
2D15 E7	2D27 F9	2D39 F13	2D48 H3	2D57 F14	2D66 F9	3D13 B2	3D22 C6	3D39-1 G4	3D43 E1	3D56 G2	3D69 H10	3D78 E12	3D88 C10	5D13 F14	7D10-2 F3	7D16-1 F5	7D22 G12	7D31 F13	9D48 E2	ID13 E4	ID23 F4	ID34 G3	ID43 G10	ID53 B4	ID65 F6	ID77 F14	ID92 E6	
2D17 E15	2D28 H7	2D40 G13	2D49 H10	2D58 G14	2D67 H2	3D14 B2	3D23 D4	3D39-2 E4	3D44 F5	3D57 G9	3D70 H11	3D79 G12	3D89 B4	5D14 G7	7D10-3 F10	7D16-2 F4	7D23-1 E12	9D03-1 F6	FD26 F2	ID14 F5	ID24 F8	ID35 G5	ID44 H2	ID55 C6	ID66 F9	ID78 F13	ID93 E6	
2D18 E15	2D30 G3	2D41 H7	2D50 H10	2D59 G6	2D68 H10	3D15 B5	3D24 C4	3D39-3 G3	3D45 F12	3D58 G11	3D71 H3	3D81 G4	3D90 E9	5D15 G15	7D10-4 B3	7D17 G4	7D23-2 G12	9D03-2 F6	FD27 G10	ID15 F12	ID25 F1	ID36 G4	ID45 G13	ID56 C4	ID67 E9	ID80 E1	cD01 D15	

B8A AUDIO: AMPLIFIER

B8A

** = overcurrent protection

DIVERSITY LIST

POS	2x8W (8 ohm)	2x15W (8 ohm)
2D15	100uF/16V	----------
2D18	100uF/16V	----------
2D22	----------	100uF/25V
2D23	----------	100uF/25V
2D26	100nF/16V	100nF/25V
2D27	100nF/16V	100nF/25V
2D28	----------	100uF/25V
2D42	100uF/16V	----------
2D44	100uF/16V	----------
2D48	2n2	1n5
2D50	2n2	1n5
2D52	----------	100uF/25V
2D53	----------	470nF/25V
2D54	----------	470nF/25V
2D55	----------	1n5
2D56	2n2	----------
2D57	2n2	----------
2D58	2n2	----------
2D59	2n2	----------
3D25	2K2	1K0
3D35	1K2	1K0
3D38	1K2	1K0
3D49	----------	15K
3D50	10K	3K9
3D51	10K	3K9
3D54	----------	47K
3D64	1K2	1K0
3D65	1K2	1K0
3D90	----------	
3D91	1K2	
5D12	----------	33uH
5D13	----------	33uH
5D18	BEAD 0805 220 E 100MHz	----------
5D19	BEAD 0805 220 E 100MHz	----------
6D11	BZX384-C18	BZX384-C27
7D18	SI4532	SI4559
7D23	SI4532	SI4559
7D24	----------	BC817-25W
9D48	JMP	----------

B8A

3104 313 6095.4

G_16290_128.eps
150206

SSB: Audio: Connectors

B8B AUDIO: CONNECTORS

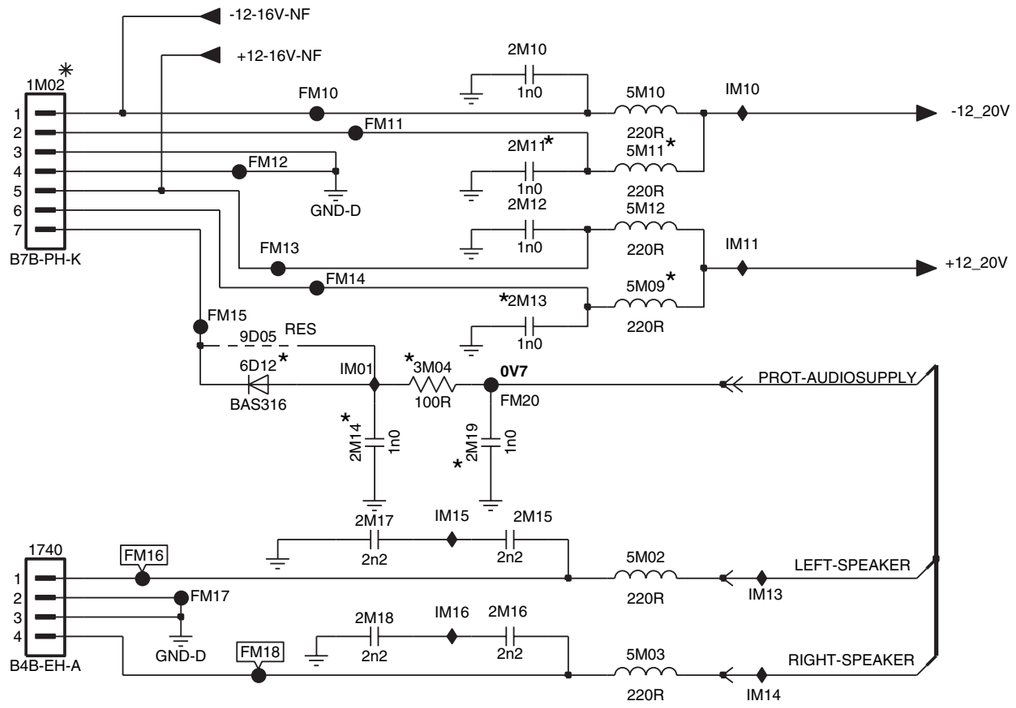

	2x8W (8 ohm)	2x15W (8 ohm)
2M11	----------	1nF
2M13	----------	1nF
2M14	----------	1nF
3M04	----------	100E
5M09	----------	220E 100MHz
5M11	----------	220E 100MHz

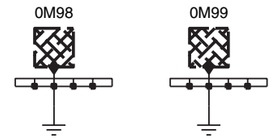

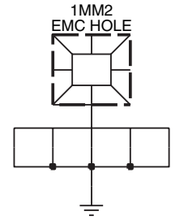

0M98 C6
0M99 C6
1740 C1
1M02 A1
1MM2 D6
2M10 A3
2M11 A3
2M12 B3
2M13 B3
2M14 C3
2M15 C3
2M16 C3
2M17 C3
2M18 C3
2M19 C3
3M04 B3
5M02 C4
5M03 C4
5M09 B4
5M10 A4
5M11 A4
5M12 B4
6D12 B2
9D05 B2
FM10 A2
FM11 A3
FM12 A2
FM13 B2
FM14 B2
FM15 B2
FM16 C2
FM17 C2
FM18 C2
FM20 B3
IM01 B3
IM10 A4
IM11 B4
IM13 C4
IM14 C4
IM15 C3
IM16 C3

G_16290_131.eps
150206

Layout SSB (Top Side Overview)

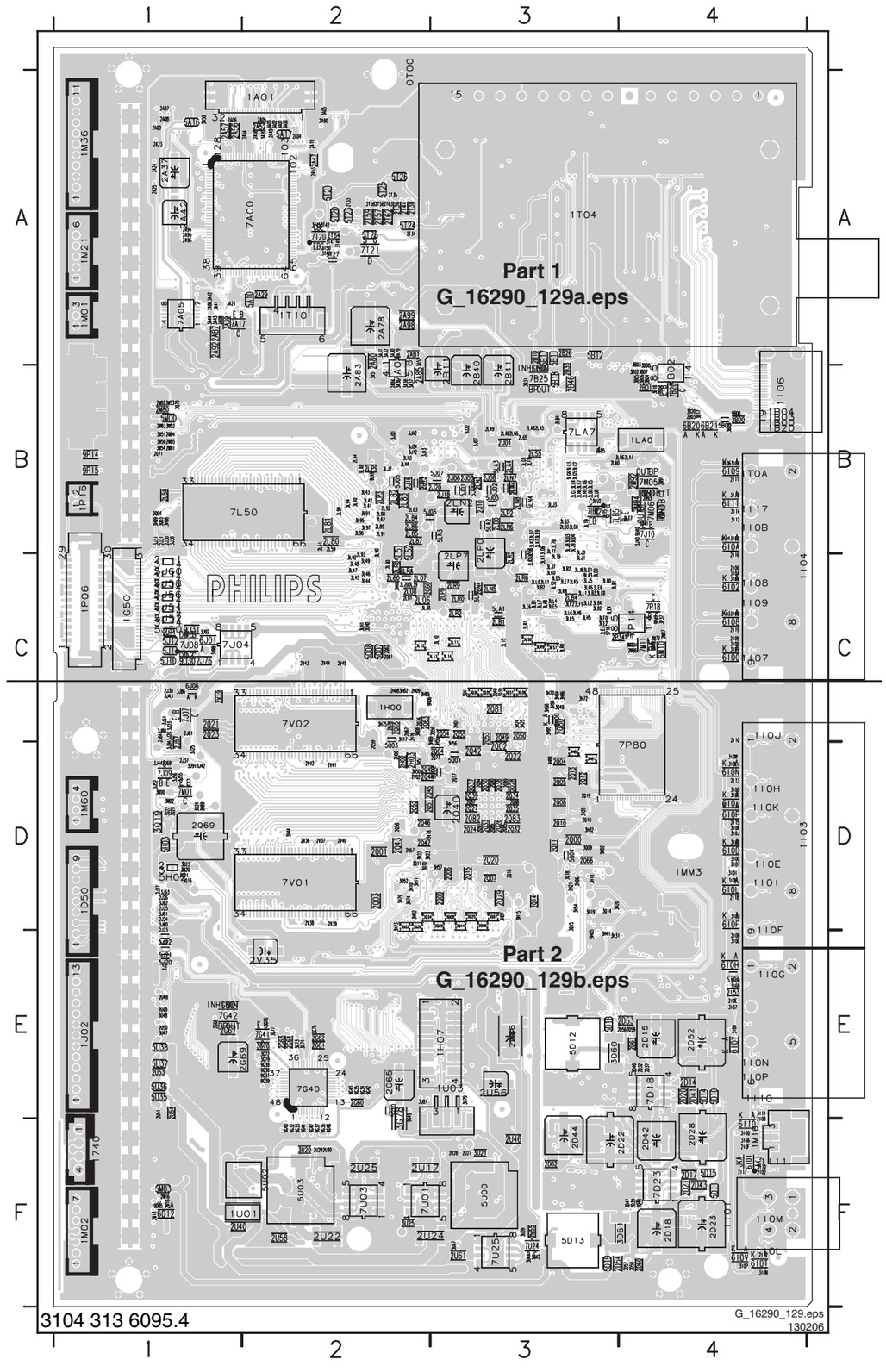

1740	F1	2D62	F3	2LN3	B3	2Q70	B1	3G70	E2	3J44	D1	3LJ0	B3	5A16	A1	7A17	A2
1A01	A2	2G60	E2	2LN4	C3	2Q71	B1	3G72	E2	3J51	C1	3LJ1	C3	5A17	A2	7B02	B4
1D50	D1	2G61	E2	2LN5	C3	2Q76	C2	3G73	E2	3J52	D1	3LJ2	B2	5B00	B4	7B20	B4
1G50	C1	2G62	E2	2LN6	B3	2Q77	D3	3G74	E2	3J55	D1	3LJ3	B3	5B11	A3	7B25	B3
1H00	C2	2G63	E2	2LN7	B3	2Q78	C2	3G75	E2	3J56	D1	3LJ5	C3	5B12	A3	7D18	E4
1H07	E3	2G64	E2	2LN8	B3	2Q79	D3	3G76	E2	3J60	D1	3LJ6	C3	5B17	A3	7D23	F4
1I00	E4	2G65	E2	2LP0	B3	2Q80	C3	3G77	E2	3J61	D1	3LJ7	C3	5B18	B3	7G40	E2
1I01	F4	2G67	E1	2LP2	B3	2Q81	C3	3G78	F2	3J62	D1	3LJ8	B3	5D10	E4	7G41	E2
1I03	C4	2G68	E1	2LP3	B2	2Q82	D3	3G79	E2	3J63	D1	3LJ9	B3	5D11	F4	7G42	E1
1I04	C4	2G69	E2	2LP4	C2	2Q83	D3	3H02	D2	3J86	C1	3LK0	C3	5D12	E3	7J04	C2
1I06	B4	2H00	D2	2LP7	C2	2Q84	D3	3H06	C3	3J88	C1	3LK1	C3	5D13	F3	7J07	C1
1J02	E1	2H01	C3	2LP8	C3	2Q85	D3	3H07	D3	3J91	D1	3LK2	B3	5D14	E4	7J08	C1
1LA0	B4	2H02	D2	2LP9	B2	2Q86	D3	3H08	C2	3J92	C1	3LK3	C3	5D15	F4	7J09	D1
1M01	A1	2H03	D2	2LR0	C3	2Q87	D3	3H10	D2	3J94	D1	3LK5	C3	5D18	E3	7J10	C4
1M02	F1	2H06	D3	2LR2	C3	2Q88	D3	3H11	D2	3J99	C1	3LK6	C3	5D19	F3	7L50	B1
1M16	F4	2H08	C2	2LR4	B3	2Q89	D3	3H16	C2	3JA2	B2	3LK7	B3	5G10	E2	7LA7	B3
1M21	A1	2H09	C2	2LR5	C3	2Q90	D3	3H17	C2	3L10	C3	3LK8	C3	5H02	D1	7LB2	B3
1M36	A1	2I02	F4	2LR6	C3	2Q91	D3	3H18	D3	3L11	C3	3LL0	C3	5H03	D1	7LB5	B3
1M60	D1	2I03	F4	2LR8	C2	2T33	A2	3H19	D3	3L12	C2	3LL1	C3	5I02	E4	7M01	D1
1P06	C1	2I05	C4	2LR9	C3	2T34	A2	3H20	D3	3L13	C3	3LL2	C3	5J00	B3	7M05	B4
1P16	B1	2I06	C4	2LS5	B3	2T35	A2	3H21	D3	3L14	C3	3LL4	C3	5J01	B3	7M06	B4
1T04	A2	2I07	D4	2M13	F1	2T36	A2	3H22	D2	3L15	C3	3LL5	C3	5J02	B3	7M11	C4
1T10	A2	2I08	E4	2M16	F1	2T38	A2	3H23	D2	3L20	C2	3LL6	C3	5J03	B3	7P14	C4
1U01	F1	2I09	E4	2M18	F1	2T44	A2	3H24	C3	3L38	C2	3LL7	C3	5J04	B2	7P18	C4
1U03	F3	2I0E	E4	2M80	B1	2T56	A2	3H25	C3	3L39	C2	3LR0	C3	5J05	B2	7P80	C4
2A04	A2	2I0F	F4	2M81	B1	2T57	A2	3H28	D3	3L40	B2	3LR1	C3	5J06	B2	7T20	A2
2A05	A2	2I10	C4	2M82	B1	2T58	A2	3H31	E3	3L41	B2	3LR2	C3	5J07	B3	7T21	A2
2A06	A1	2I11	B4	2M83	B1	2T59	A2	3H32	D3	3L42	B2	3LR9	C3	5J10	C1	7U01	F2
2A07	A1	2I12	F4	2M84	B1	2T62	A2	3H40	C2	3L43	B2	3LS0	C3	5J11	C1	7U03	F2
2A08	A1	2I13	D4	2M85	B1	2T63	A2	3H41	E3	3L44	C2	3LS1	C3	5J12	C1	7U24	F3
2A09	A1	2I14	B4	2M86	C4	2T64	A2	3H50	D2	3L45	C2	3LS2	C3	5J20	E1	7U25	F3
2A19	A2	2I15	D4	2M87	C4	2U17	F2	3H51	D2	3L46	C2	3LT5	B3	5J21	E1	7V01	D1
2A23	A1	2I16	C4	2M91	B4	2U22	F2	3H54	D3	3L47	C2	3LT7	B4	5J22	E1	7V02	C2
2A24	A1	2I17	F4	2M92	B4	2U24	F3	3H55	D3	3L48	C2	3LT9	B3	5J50	C1	9B00	B4
2A25	A1	2I18	D4	2M93	B4	2U25	F2	3H56	D3	3L49	C2	3LU0	B3	5J52	C1	9D05	F1
2A29	A2	2I19	C4	2M94	B4	2U27	F3	3H57	D3	3L77	B3	3LU1	B3	5J54	C1	9G30	E2
2A37	A1	2I53	E4	2P34	C3	2U28	F3	3H69	C3	3L78	B3	3LU2	B3	5J56	C1	9G31	E2
2A42	A1	2J01	B3	2Q00	D3	2U29	F2	3H70	C3	3L79	C3	3M00	D1	5J58	C1	9G32	F2
2A47	A2	2J03	B3	2Q01	D2	2U30	F2	3H72	C3	3L80	C3	3M02	D1	5J60	C1	9G33	F2
2A49	A2	2J06	B3	2Q02	D3	2U40	F1	3H73	D2	3L81	C3	3M50	B1	5L50	C2	9G34	E2
2A50	A1	2J08	B3	2Q03	D2	2U46	F3	3H74	D2	3L82	C3	3M51	B1	5L51	B2	9G35	E2
2A52	A2	2J10	B3	2Q04	D3	2U48	E1	3H75	C2	3L84	C3	3M52	B1	5L52	B2	9G36	F2
2A53	A2	2J13	B2	2Q05	D3	2U49	E1	3H79	D2	3L90	B2	3M53	B1	5LA1	C3	9G37	F2
2A54	A2	2J16	B2	2Q06	D3	2U50	E1	3H80	D3	3L91	B2	3M54	B1	5LA2	B3	9G38	E2
2A56	A1	2J18	B3	2Q07	D3	2U51	E1	3H81	D3	3L92	C2	3M71	C4	5LA3	B3	9G39	E2
2A57	A1	2J20	B3	2Q08	D3	2U53	E1	3H82	C2	3L93	C2	3M72	C4	5LN0	C3	9G40	F2
2A58	A2	2J21	E1	2Q09	D3	2U54	E1	3H84	C3	3L94	B2	3P37	C4	5LN1	B3	9G41	F2
2A78	A2	2J22	E1	2Q10	D3	2U55	F3	3H85	C2	3L95	B2	3Q02	D2	5LN2	C3	9G42	E2
2A79	A2	2J23	D1	2Q11	D3	2U56	E3	3H86	C3	3L96	B2	3Q03	B1	5LN3	B3	9G43	E2
2A80	A2	2J24	D1	2Q12	D3	2U58	F2	3H88	D3	3L97	B2	3Q04	B1	5LN4	B3	9G47	F2
2A81	A2	2J25	D1	2Q13	D3	2U61	F3	3H89	D1	3L98	B2	3Q05	D3	5M00	B1	9G48	F2
2A83	B2	2J26	D1	2Q14	D3	2U86	E3	3H94	C3	3LA8	C3	3Q07	D3	5M03	F1	9G49	E2
2A84	B2	2J27	D1	2Q15	D3	2V02	D2	3H95	C3	3LB1	C3	3Q08	D3	5Q01	D3	9H02	D3
2A85	B2	2J30	B1	2Q16	D3	2V19	C1	3H98	B1	3LB2	C3	3Q09	D3	5Q02	D3	9H05	E3
2A86	A1	2J31	B1	2Q17	D3	2V35	E2	3H99	B1	3LB3	C3	3Q10	D2	5Q03	D2	9H06	C2
2A87	A1	2J37	D1	2Q18	D3	2V36	D2	3I00	C4	3LB4	B3	3Q11	D2	5Q04	D3	9H15	D3
2A90	A2	2J38	C1	2Q19	D3	2V37	D2	3I01	B4	3LB5	B3	3Q14	D3	5Q07	C2	9J22	B3
2A92	A1	2J57	D1	2Q20	D3	2V38	D2	3I02	B4	3LB6	B4	3Q15	D3	5Q08	C2	9J24	B2
2A94	A1	2J61	C1	2Q21	C1	2V39	D2	3I03	C4	3LC0	B3	3Q16	D1	5T20	A2	9J30	C1
2A95	A1	2J64	C1	2Q22	D3	2V40	D2	3I04	B4	3LC1	C3	3Q18	D3	5T21	A2	9J31	C1
2A96	A1	2J69	D1	2Q23	C1	2V41	D2	3I06	B4	3LC2	B3	3Q19	D1	5T23	A2	9J40	B4
2A98	A2	2J71	C1	2Q24	D3	2V42	D2	3I07	C4	3LC3	B3	3Q20	D1	5T24	A2	9LA3	C3
2A99	A2	2J76	C1	2Q26	D3	2V43	C2	3I08	C4	3LC4	B3	3Q21	D1	5T25	A2	9LA8	B2
2B00	B4	2L01	C2	2Q27	D3	2V44	C2	3I09	C4	3LC5	B3	3Q22	D1	5T26	A2	9LA9	B2
2B01	B4	2L06	C2	2Q28	D3	2V45	C2	3I0A	C4	3LC6	B3	3Q23	D1	5T27	A2	9M09	C4
2B03	B4	2L07	C2	2Q30	D3	3A01	A2	3I0B	D4	3LC7	B3	3Q24	D1	5T28	A2	9P14	B1
2B04	B4	2L08	C2	2Q32	D3	3A02	A2	3I0C	D4	3LC8	C3	3Q25	D3	5U00	F3	9P15	B1
2B10	A3	2L58	B1	2Q33	D3	3A03	A2	3I0D	D4	3LD0	C3	3Q26	D2	5U02	F1	9P16	C3
2B11	B2	2L59	B2	2Q34	D3	3A05	A2	3I0E	E4	3LD1	C3	3Q28	D3	5U03	F2	9P17	C4
2B26	A3	2L60	C2	2Q35	D3	3A06	A2	3I0F	D4	3LD3	B3	3Q29	D1	5U35	E1	9P42	C4
2B31	B3	2L61	B2	2Q37	D3	3A08	A1	3I0G	D4	3LD4	B3	3Q34	D2	5U36	E1		
2B33	B3	2L62	B2	2Q38	D3	3A20	A2	3I0H	D4	3LD5	C3	3Q35	C3	5U37	E1		
2B40	B3	2L63	B2	2Q39	D3	3A21	A1	3I0I	D4	3LD6	B3	3Q36	C3	5U38	E1		
2B41	B3	2L64	B2	2Q40	D3	3A30	A2	3I0J	D4	3LD7	B3	3Q37	C3	6B20	B4		
2B46	B3	2L65	B3	2Q42	D3	3A31	A2	3I0K	D4	3LD8	B3	3Q38	C3	6B21	B4		
2D14	E4	2L66	B3	2Q43	D2	3A32	A2	3I0L	D4	3LE2	C3	3Q39	C3	6D12	F1		
2D15	E4	2L80	B2	2Q44	D2	3A36	B2	3I0M	D4	3LE3	C3	3Q40	C3	6H00	C3		
2D17	F4	2L81	B2	2Q45	D2	3A37	B2	3I0N	F4	3LE4	C3	3Q41	C3	6I00	C4		
2D18	F4	2L82	B2	2Q46	D2	3A38	B2	3I0P	F4	3LE5	C3	3Q44	D3	6I01	F4		
2D20	E4	2L83	B2	2Q47	D2	3A39	A1	3I0Q	F4	3LE6	C3	3Q48	C3	6I02	C4		
2D21	F4	2L84	B2	2Q48	D2	3A41	A1	3I10	F4	3LE7	C3	3Q52	D2	6I08	C4		
2D22	E3	2L85	B2	2Q49	C3	3A42	A1	3I11	E4	3LE8	C3	3T42	A2	6I09	B4		
2D23	F4	2L86	B2	2Q50	C3	3A43	A1	3I12	B4	3LE9	B3	3T45	A2	6I0A	B4		
2D28	E4	2L87	B2	2Q51	D2	3A44	A1	3I13	B4	3LF0	C3	3T46	A2	6I0D	D4		
2D32	E4	2L88	B2	2Q52	D2	3A51	B2	3I60	E4	3LF2	C3	3T47	A2	6I0F	D4		
2D37	E4	2L89	B2	2Q53	C3	3A52	A2	3I66	F4	3LF8	B3	3T49	A2	6I0H	E4		
2D39	F4	2L90	C2	2Q54	C3	3B02	B4	3I67	E4	3LF9	C3	3T50	A2	6I0J	D4		
2D40	F4	2L91	B2	2Q55	C3	3B03	A4	3I68	E4	3LG3	B3	3U20	F2	6I0L	D4		
2D41	E4	2L92	B2	2Q56	C3	3B04	B4	3J01	B2	3LG5	B3	3U21	F3	6I0N	D4		
2D42	E4	2LA0	B3	2Q57	D2	3B05	B4	3J07	B3	3LG6	B3	3U25	F2	6I0P	D4		
2D43	F4	2LA1	B4	2Q58	D2	3B06	B4	3J12	B2	3LG7	B3	3U39	F3	6I0T	F4		
2D44	F3	2LA4	B3	2Q59	D2	3B07	B4	3J13	B2	3LG8	B3	3U42	F3	6I0V	F4		
2D52	E4	2LA5	B3	2Q60	C2	3B08	B4	3J23	C1	3LG9	B3	3U44	F3	6I0Y	E4		
2D53	E4	2LA6	B3	2Q61	C2	3B17	B4	3J25	D1	3LH0	C2	3U47	E1	6I10	E4		
2D54	F3	2LA8	B3	2Q62	C2	3B18	B4	3J28	C1	3LH1	C2	3U48	E1	6I11	B4		
2D56	E4	2LA9	B3	2Q63	C2	3B19	B4	3J30	B1	3LH3	B2	3U79	E3	6J01	C1		
2D57	F4	2LB0	B3	2Q64	D3	3B20	B4	3J31	B1	3LH4	B2	3U81	E2	6J06	C1		
2D58	F4	2LB1	C3	2Q65	C2	3D46	E4	3J40	B4	3LH5	C3	3UA7	F3	6M10	C4		
2D59	E4	2LB3	B3	2Q66	D3	3D47	F4	3J41	B4	3LH6	C3	3V44	D2	7A00	A2		
2D60	F4	2LB4	C3	2Q67	C2	3D60	E3	3J42	D1	3LH8	B3	3V78	D2	7A04	B2		
2D61	E4	2LN2	B2	2Q69	D1	3D61	F3	3J43	C1	3LH9	B3	5A10	A2	7A05	A1		

Layout SSB (Top Side Part 1)

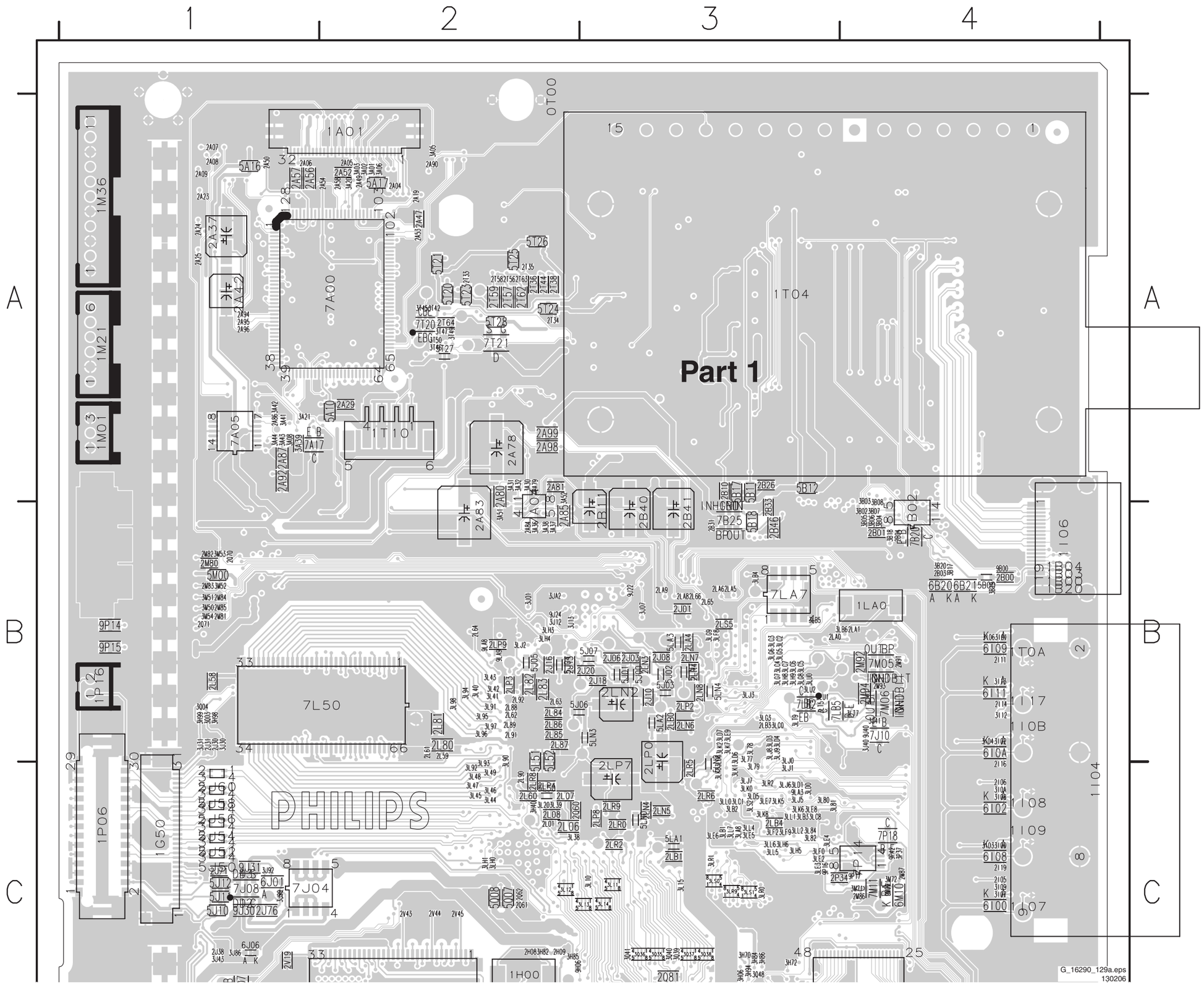

Layout SSB (Top Side Part 2)

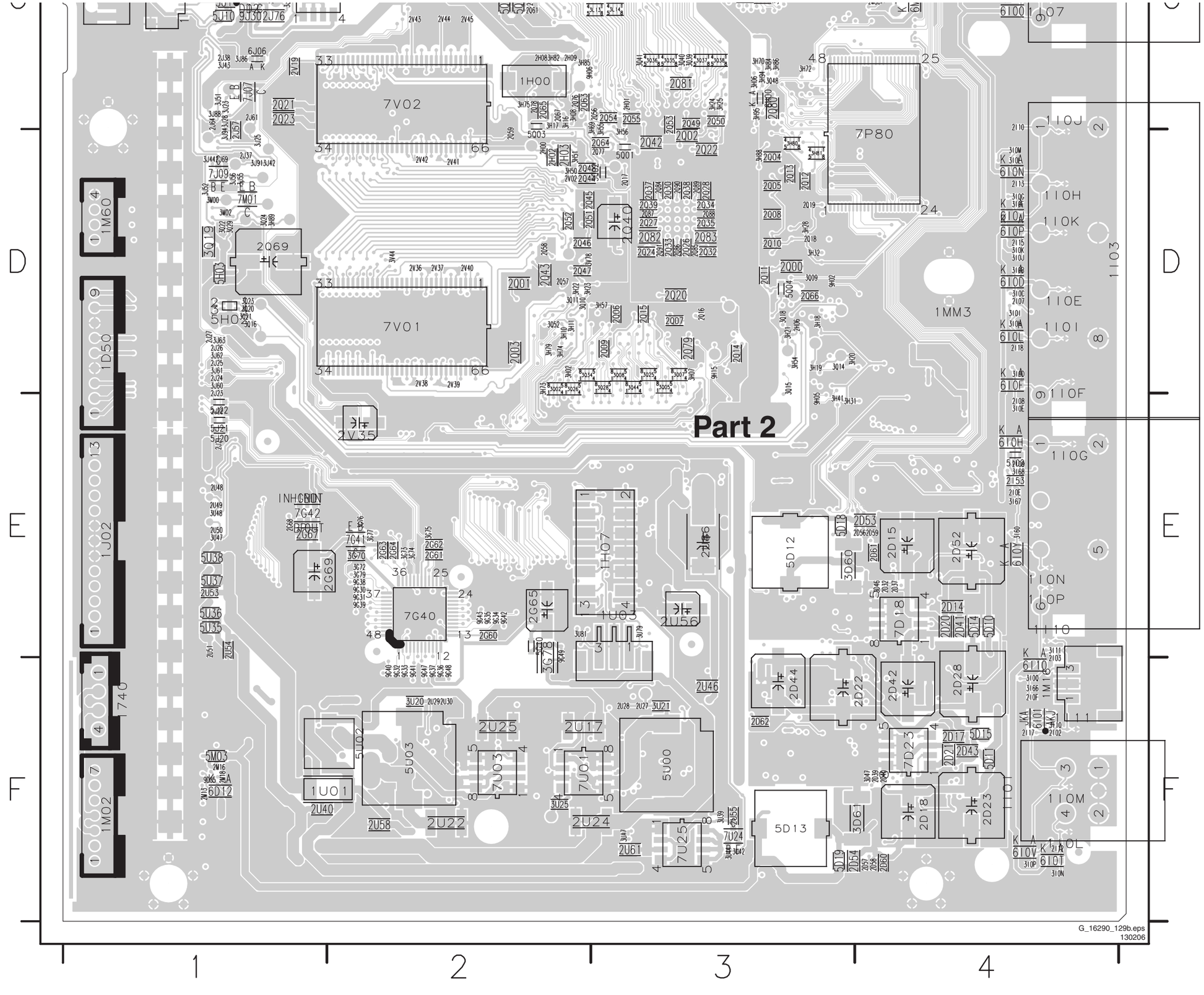

Layout SSB (Overview Bottom Side)

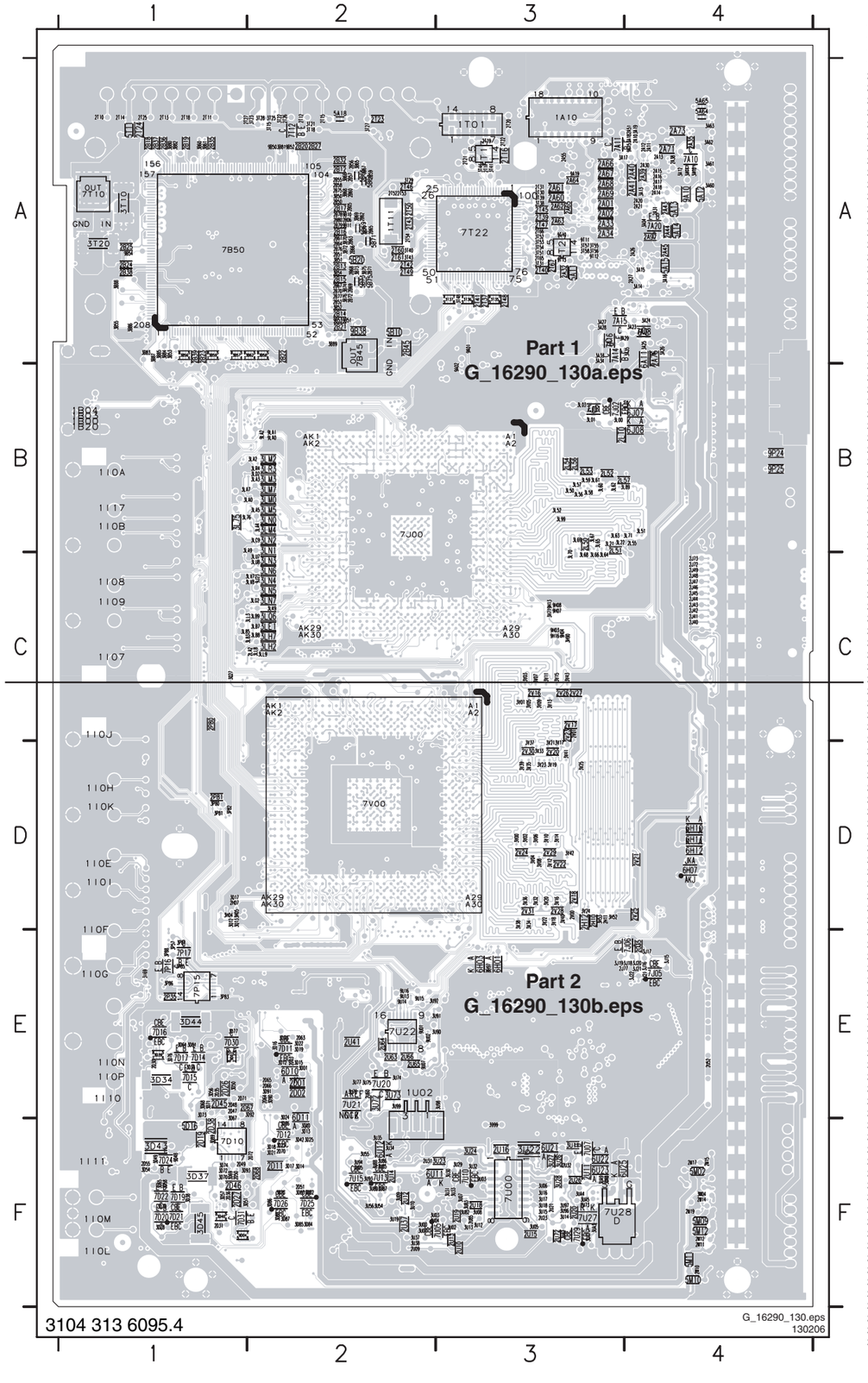

1A10	A3	2D38	F1	2U31	F2	3D37	F1	3LM0	B2	3U83	F3	7D10	F2
1T01	A3	2D45	E1	2U32	F3	3D38	F1	3LM2	B2	3U85	F2	7D11	E2
1T11	A2	2D46	F1	2U37	F2	3D39	E1	3LM3	B2	3U86	F2	7D12	F2
1U02	E2	2D47	E1	2U41	E2	3D40	F1	3LM4	B2	3U87	F2	7D14	E1
2A01	A3	2D48	E1	2U52	E4	3D42	F2	3LM5	B2	3U88	F2	7D15	E1
2A02	A3	2D49	F1	2U60	E2	3D43	F1	3LM7	B2	3U89	F2	7D16	E1
2A10	A4	2D50	F1	2U63	E2	3D44	E1	3LN0	B2	3U90	E3	7D17	E1
2A11	A4	2D51	F2	2U64	E2	3D45	F1	3LN1	B2	3U91	E3	7D19	F1
2A12	A4	2D55	F1	2U65	E2	3D49	F1	3LN2	B2	3U92	E2	7D20	F1
2A13	A4	2D63	E2	2U66	E2	3D50	E1	3LN3	C2	3U93	F2	7D21	F1
2A14	A4	2D64	E2	2U72	F3	3D51	F1	3LN4	C2	3U94	F2	7D22	F1
2A15	A4	2D65	E2	2U73	F3	3D54	F1	3LN5	C2	3U95	F2	7D24	F1
2A16	A4	2D66	E2	2U85	F3	3D56	E1	3LN6	C2	3U96	F3	7D25	F2
2A17	A4	2D67	E1	2V00	D3	3D57	F1	3LN7	C2	3U97	F3	7D26	F2
2A18	A4	2D68	F2	2V01	C3	3D58	F1	3LQ6	C2	3U98	E3	7D30	E2
2A20	A4	2D70	F2	2V16	C3	3D64	E1	3LR3	B2	3U99	E2	7D31	F2
2A21	A4	2D71	E1	2V17	C3	3D65	F1	3LR4	B2	3UA1	F3	7J00	C2
2A26	A4	2D72	F2	2V18	D3	3D67	E1	3LU7	C2	3UA2	F3	7J01	B3
2A27	A4	2G35	E4	2V20	D3	3D68	E1	3LU8	C2	3UA3	F3	7J02	B3
2A30	A4	2H07	D1	2V21	D4	3D69	F1	3LV7	C2	3UA4	F3	7J05	E4
2A31	A4	2H10	D3	2V22	D3	3D70	F1	3LV8	C2	3UA5	F3	7J06	E3
2A32	A3	2H11	D3	2V23	C3	3D71	E1	3M04	F4	3UA8	F3	7P15	E1
2A33	A3	2H12	D3	2V24	D3	3D72	F1	3P57	E1	3UA9	F3	7P16	E1
2A34	A3	2J40	C4	2V25	D4	3D73	E1	3P80	D1	3V00	D3	7P17	E1
2A35	A4	2J41	C4	2V26	C3	3D74	F1	3P81	D1	3V01	C3	7T10	A1
2A38	A4	2J42	C4	2V27	C3	3D75	F2	3P82	D1	3V02	D3	7T12	A2
2A39	A4	2J43	C4	2V28	D3	3D76	E1	3P83	E1	3V03	C3	7T13	A3
2A40	A4	2J44	C4	2V29	D3	3D77	E1	3P84	E1	3V04	D3	7T22	A3
2A41	A4	2J45	C4	2V30	D3	3D78	F1	3P85	E1	3V05	C3	7T23	A3
2A43	A4	2J46	C4	2V31	D3	3D79	F1	3P86	E1	3V06	D3	7U00	F3
2A44	A4	2J47	C4	3999	F3	3D81	E1	3P88	E1	3V07	C3	7U05	F3
2A45	A4	2J48	C4	3A04	A4	3D82	F2	3Q12	D1	3V08	D3	7U07	F3
2A51	A4	2J49	C4	3A10	A4	3D83	F2	3Q13	D1	3V09	C3	7U10	F3
2A55	A3	2J72	C4	3A11	A4	3D84	F2	3Q17	D1	3V10	D3	7U13	F2
2A60	A3	2J73	C4	3A12	A4	3D85	F2	3Q27	C1	3V11	C3	7U15	F2
2A61	A3	2J77	E3	3A13	A4	3D86	F2	3T10	A1	3V12	D3	7U20	E2
2A62	A3	2L50	B3	3A14	A4	3D87	F2	3T15	A2	3V13	C3	7U21	E2
2A63	A3	2L51	B3	3A15	A4	3D88	F2	3T18	A2	3V14	D3	7U22	E2
2A64	A3	2L52	B3	3A16	A4	3D89	F1	3T20	A1	3V15	C3	7U27	F3
2A65	A3	2L53	B3	3A17	A3	3D90	E2	3T21	A2	3V16	D3	7U28	F4
2A66	A3	2L54	B3	3A18	A4	3D91	E2	3T22	A2	3V17	D3	7U29	F3
2A67	A3	2L55	B4	3A19	A4	3D92	E2	3T23	A2	3V18	D3	7V00	D2
2A68	A3	2L56	B3	3A23	A4	3D93	F1	3T25	A2	3V19	D3	9A01	A3
2A69	A3	2L57	B3	3A24	A4	3H04	D1	3T27	A2	3V20	D3	9A02	B3
2A71	A4	2LA2	C2	3A25	A4	3H05	D1	3T28	A2	3V21	D3	9A10	A4
2A73	A4	2LT0	B3	3A26	A4	3H52	D3	3T29	A2	3V22	D3	9A15	A4
2A76	A4	2M10	F4	3A27	A3	3H53	D3	3T31	A3	3V23	D3	9A19	A3
2A97	A4	2M11	F4	3A28	A3	3H71	C3	3T35	A3	3V24	D3	9B10	A2
2B05	A2	2M12	F4	3A29	A3	3H90	C3	3T36	A3	3V25	D3	9B11	A2
2B06	A2	2M14	F4	3A33	A3	3H97	E3	3T37	A3	3V32	D3	9B38	A2
2B12	A2	2M15	F4	3A34	A3	3I69	E1	3T38	A3	3V33	D3	9B50	A2
2B13	A2	2M17	F4	3A35	A4	3J15	E4	3T39	A3	3V34	D3	9B51	A2
2B14	A2	2M19	F4	3A60	A4	3J16	E4	3T40	A2	3V35	D3	9B52	A2
2B15	A2	2P35	E1	3A61	A4	3J17	E4	3T41	A3	3V36	D3	9B53	A2
2B16	A2	2P80	C1	3A62	A4	3J18	E4	3T43	A2	3V37	D3	9B54	A1
2B17	A2	2P81	D1	3A63	A4	3J19	E3	3T44	A3	3V38	D3	9D03	E1
2B18	A1	2T10	A1	3B50	A2	3J20	E4	3T48	A3	3V39	D3	9D04	F1
2B19	A1	2T11	A1	3B51	A2	3J21	E4	3T51	A3	3V40	D3	9D48	F1
2B20	A2	2T12	A2	3B52	A2	3J22	E4	3T52	A3	3V41	D3	9H03	C3
2B21	A2	2T13	A1	3B53	A1	3L00	B3	3T53	A3	3V42	D3	9H04	C3
2B22	A2	2T14	A1	3B54	A2	3L01	B3	3T54	A3	3V43	C3	9H07	C3
2B23	A1	2T15	A2	3B55	A1	3L02	B4	3T55	A3	5A11	A3	9H08	C3
2B24	A1	2T16	A3	3B56	A1	3L03	B3	3T56	A3	5A12	A4	9H13	C3
2B25	A1	2T17	A3	3B57	A1	3L21	B3	3T57	A3	5A13	A4	9H16	C3
2B27	A2	2T18	A1	3B58	A2	3L22	B3	3T58	A3	5A14	A4	9J21	E4
2B32	A2	2T19	A3	3B59	A1	3L50	B3	3U00	F2	5A15	A4	9J23	C2
2B35	A1	2T20	A3	3B60	A1	3L51	B4	3U01	F2	5A18	A2	9LA0	B2
2B36	A1	2T21	A3	3B61	A1	3L52	B3	3U02	F3	5A64	A4	9LA1	B2
2B37	A1	2T22	A3	3B62	A2	3L56	B3	3U03	F2	5A65	A4	9LA2	B2
2B38	A1	2T23	A2	3B65	A2	3L57	B3	3U04	F2	5B10	A2	9P24	B4
2B39	A1	2T24	A1	3B66	A2	3L58	B3	3U05	F3	5B20	A2	9P25	B4
2B45	A2	2T25	A1	3B67	A2	3L59	B3	3U06	F3	5B65	A2	9T10	A3
2B50	A2	2T26	A2	3B68	A2	3L60	B3	3U07	F3	5B67	A2	9T11	A3
2B51	A2	2T27	A1	3B69	A2	3L61	B3	3U08	F3	5B69	A2	9T12	A3
2B52	A2	2T30	A3	3B70	A2	3L62	B3	3U09	F2	5B71	A2	9T13	A3
2B55	A2	2T31	A3	3B71	A2	3L63	B3	3U10	F2	5B73	A2	9U01	E2
2B56	A2	2T37	A3	3B72	A2	3L64	C3	3U11	F3	5B75	A2	9U02	E2
2B57	A2	2T39	A3	3B73	A2	3L65	B3	3U12	F3	5D16	F1	9U03	F3
2B58	A2	2T40	A3	3B74	A2	3L66	C3	3U13	F3	5M02	F4	9U07	E2
2B59	A2	2T41	A3	3B75	A2	3L67	B3	3U14	F3	5M09	F4	9U13	E2
2B60	A2	2T42	A2	3B76	A2	3L68	C3	3U15	F3	5M10	F4	9U14	E2
2B61	A2	2T43	A2	3B80	A1	3L69	B3	3U16	F3	5M11	F4	9U15	E2
2B62	A2	2T45	A3	3B81	A2	3L70	C3	3U17	F3	5M12	F4	9U16	E2
2B63	A2	2T46	A2	3B82	A1	3L71	B4	3U18	F3	5T11	A1		
2B64	A2	2T47	A3	3B83	A1	3L75	B1	3U19	F2	6A11	A4		
2B65	A2	2T48	A3	3B84	A1	3L76	B1	3U22	F3	6D10	E2		
2B66	A2	2T49	A2	3B85	A1	3L83	C2	3U23	F3	6D11	E2		
2B67	A2	2T50	A2	3B86	A1	3L85	C1	3U24	F3	6H01	E3		
2B68	A2	2T52	A2	3B87	A1	3L89	B4	3U26	F3	6H03	E3		
2B69	A2	2T53	A2	3B88	A1	3L99	B3	3U27	F3	6H07	D4		
2B70	A2	2T54	A2	3B89	A2	3LA0	B2	3U28	F3	6H10	D4		
2B71	A2	2T60	A2	3D01	E2	3LA2	B2	3U29	F3	6H11	D4		
2B72	A2	2T61	A2	3D10	F2	3LA3	B2	3U30	F3	6H12	D4		
2B75	A2	2T65	A3	3D12	E2	3LA4	B2	3U31	F3	6J07	B4		
2B76	A2	2T66	A3	3D13	F2	3LA5	B2	3U32	F3	6J08	B4		
2B77	A2	2T67	A3	3D14	F2	3LA7	B1	3U33	F3	6U11	F2		
2B78	A2	2U09	F2	3D15	E2	3LA9	B2	3U34	F2	6U12	F2		
2B79	A2	2U10	F3	3D16	E2	3LB7	C2	3U35	F2	6U21	F3		
2B80	A2	2U11	F3	3D17	F2	3LB8	C2	3U37	F2	6U22	F3		
2D01	E2	2U12	F2	3D18	F2	3LB9	C2	3U38	F2	6U23	F3		
2D02	E2	2U13	F3	3D19	E2	3LC9	B2	3U54	F2	6U25	F4		
2D03	E2	2U14	F2	3D20	E2	3LD2	B2	3U55	F2	7A08	A4		
2D11	F2	2U15	F3	3D21	F2	3LE1	C2	3U56	F2	7A10	A4		
2D19	F1	2U16	F3	3D22	E2	3LG2	C2	3U72	E2	7A11	A3		
2D26	E1	2U18	F3	3D23	F2	3LH2	C2	3U73	E2	7A14	A3		
2D27	F1	2U19	F3	3D24	E2	3LH7	C2	3U74	E2	7A15	A3		
2D30	E1	2U20	F3	3D25	F2	3LK9	C2	3U75	E2	7A16	A3		
2D31	F1	2U21	F3	3D26	F2	3LL3	C2	3U76	E2	7A20	A4		
2D35	E1	2U23	F3	3D34	E1	3LL8	C2	3U77	E2	7B45	A2		
2D36	F1	2U26	F3	3D35	E1	3LL9	C2	3U82	F3	7B50	A1		

Layout SSB (Bottom Side Part 1)

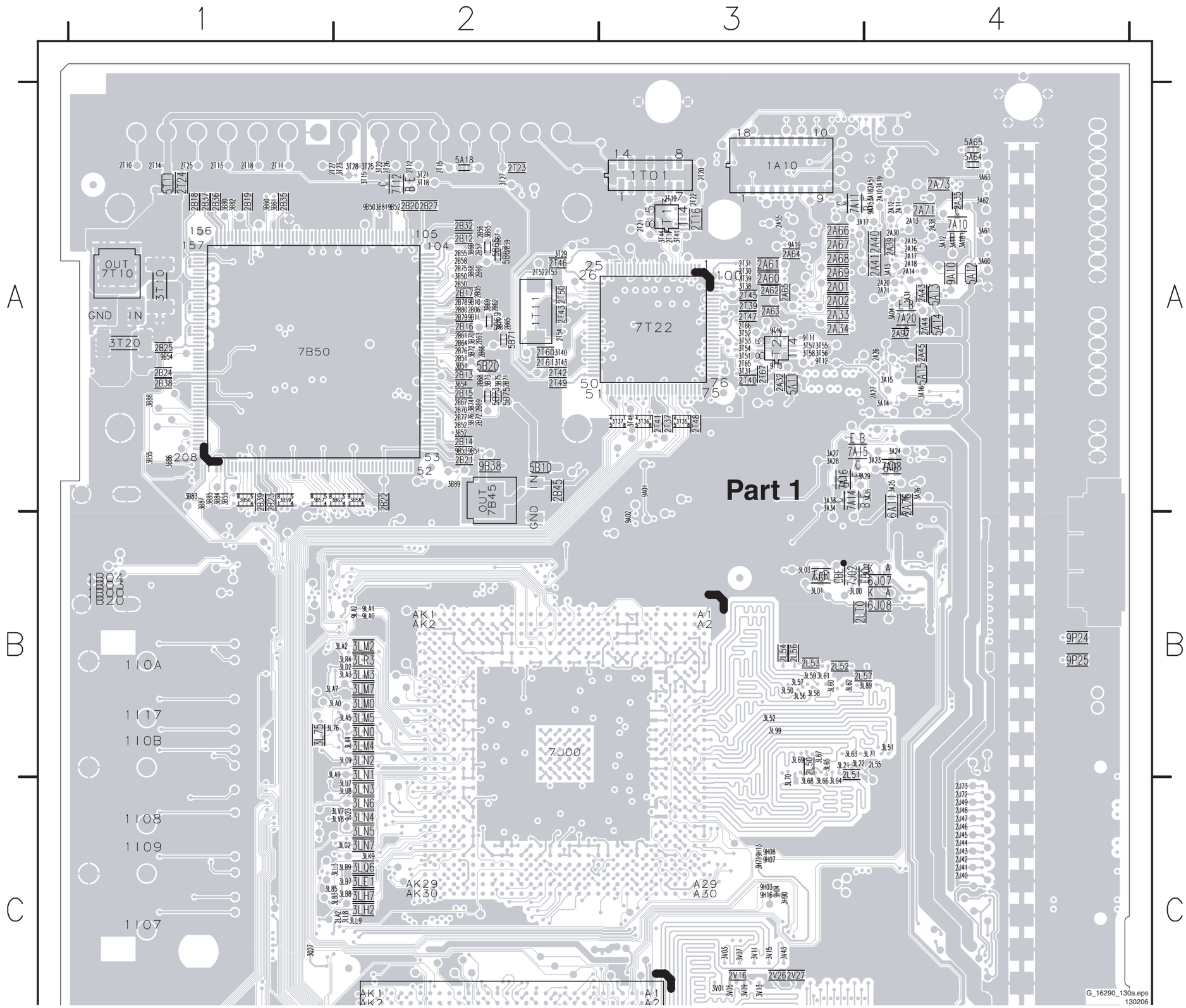

Layout SSB (Bottom Side Part 2)

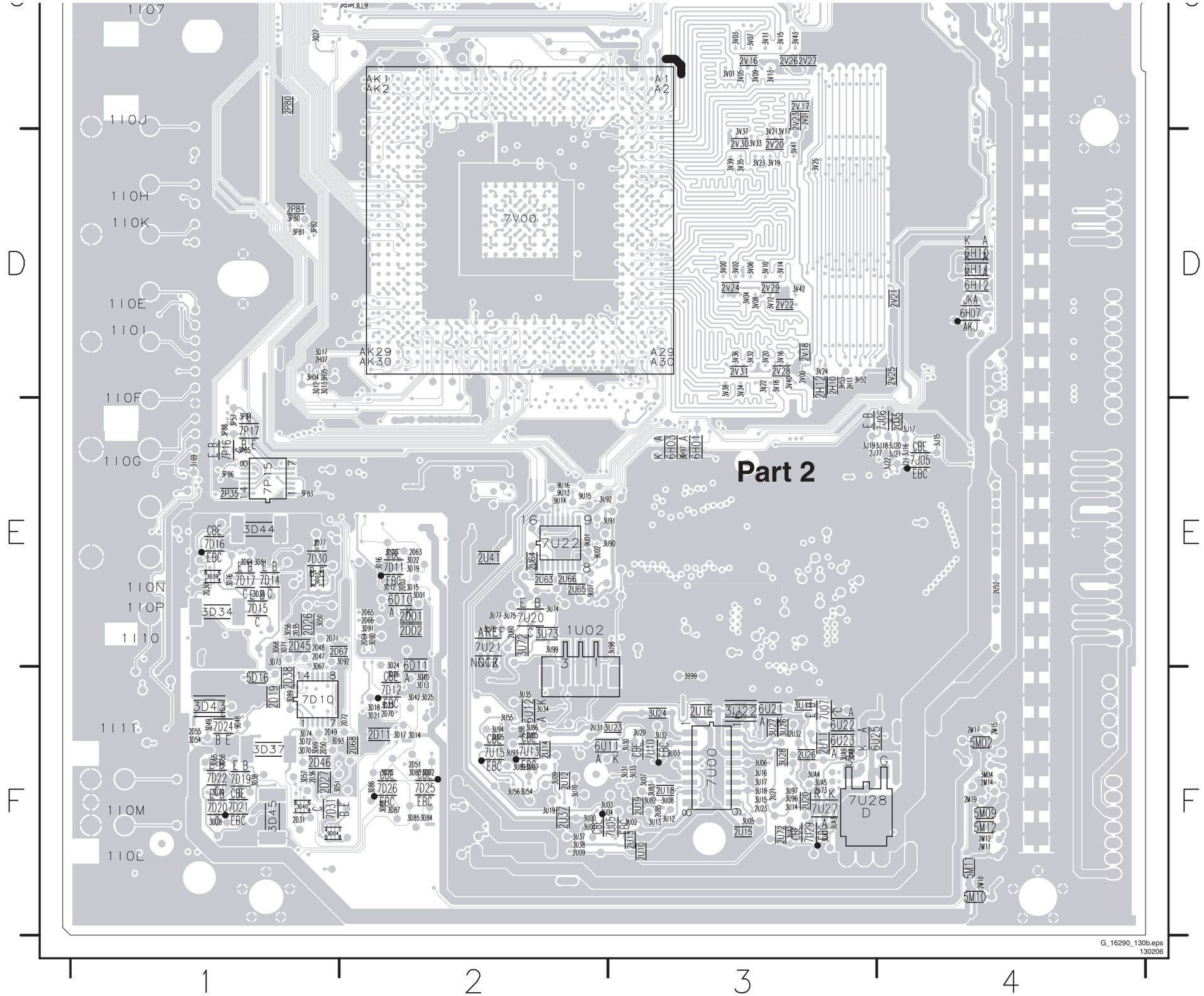

G_16290_130b.eps
130206

Side I/O Panel: (26” & 32”)

REAR FACING SIDE I/O (26” & 32”)

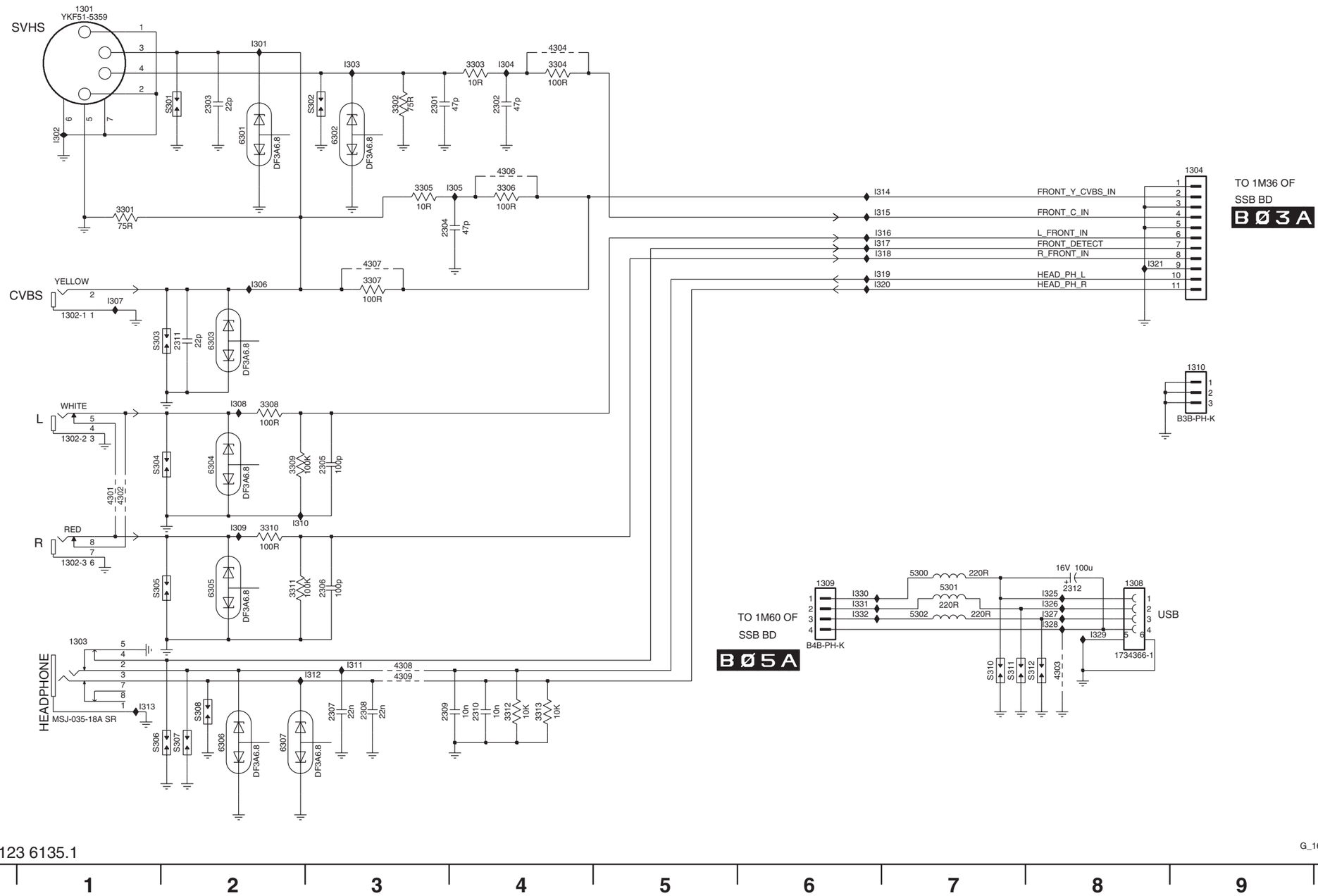

3139 123 6135.1

G_16290_052.eps
010206

1301 A1
1302-1 C1
1302-2 D1
1302-3 E1
1303 E1
1304 B9
1308 E8
1309 E6
1310 C9
2301 B3
2302 B4
2303 B2
2304 B3
2305 D3
2306 E3
2307 F3
2308 F3
2309 F3
2310 F4
2311 C2
2312 E8
3301 B1
3302 B3
3303 A4
3304 A4
3305 B3
3306 B4
3307 C3
3308 D2
3309 D2
3310 D2
3311 E2
3312 F4
3313 F4
4301 D1
4302 D1
4303 E8
4304 A4
4306 B4
4307 C3
4308 E3
4309 E3
5300 E7
5301 E7
5302 E7
6301 B2
6302 B3
6303 C2
6304 D2
6305 E2
6306 F2
6307 F2
I301 A2
I302 B1
I303 A3
I304 A4
I305 B4
I306 C2
I307 C1
I308 D2
I309 D2
I310 D2
I311 E3
I312 E3
I313 F1
I314 B7
I315 B7
I316 B7
I317 B7
I318 C7
I319 C7
I320 C7
I321 C8
I325 E8
I326 E8
I327 E8
I328 E8
I329 E8
I330 E6
I331 E6
I332 E6
S301 B2
S302 B3
S303 C1
S304 D1
S305 E1
S306 F1
S307 F2
S308 F2
S310 E7
S311 E7
S312 E8

Layout Side I/O Panel (26” & 32”) (Top Side)

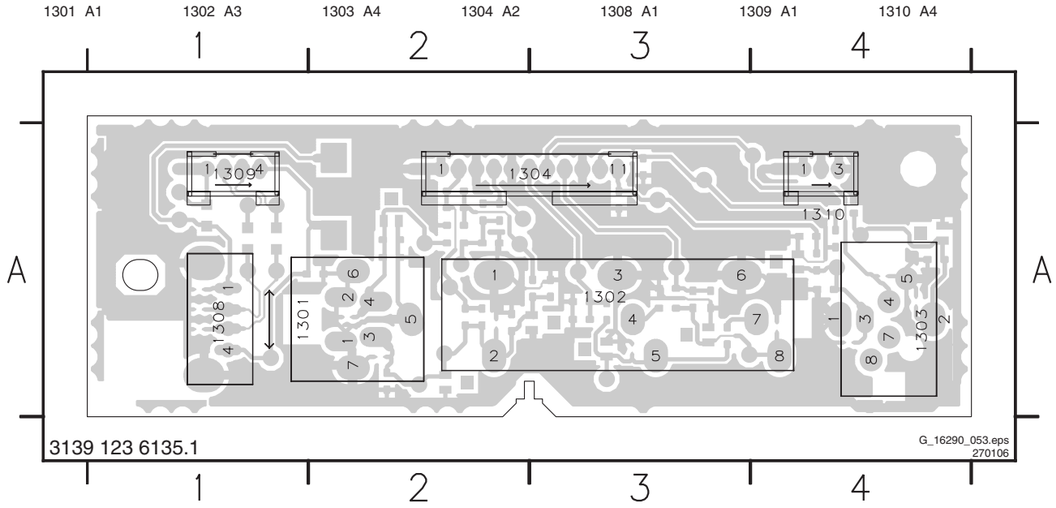

Layout Side I/O Panel (26” & 32”) (Bottom Side)

2301 A3	2305 A2	2309 A2	3301 A2	3305 A2	3309 A2	3313 A1	4304 A3	4309 A1	6301 A3	6305 A2
2302 A3	2306 A2	2310 A2	3302 A3	3306 A3	3310 A2	4301 A2	4306 A3	5300 A4	6302 A3	6306 A1
2303 A3	2307 A1	2311 A3	3303 A3	3307 A3	3311 A2	4302 A2	4307 A3	5301 A4	6303 A2	6307 A1
2304 A3	2308 A1	2312 A3	3304 A3	3308 A2	3312 A1	4303 A3	4308 A1	5302 A4	6304 A2	

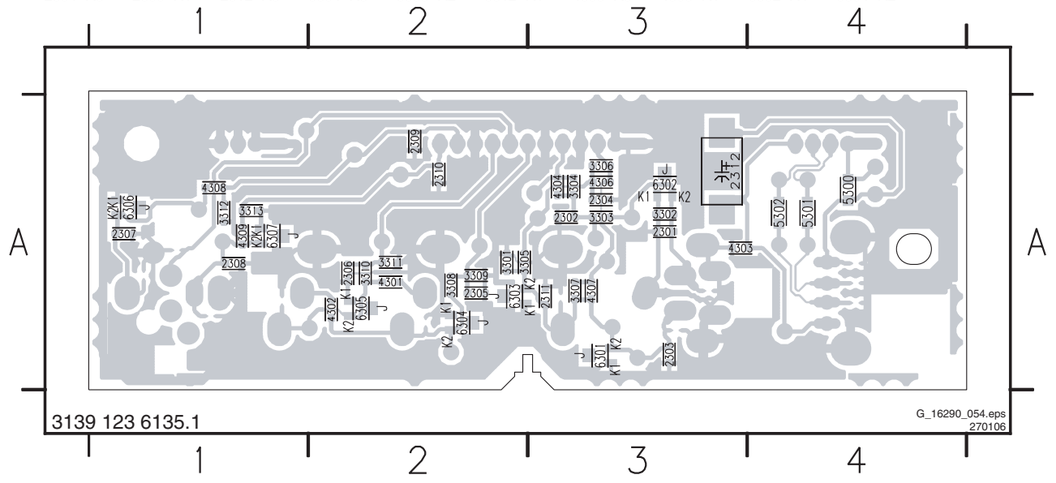

Personal Notes:

E_06532_012.eps
131004

Side I/O Panel: (37” & 42”)

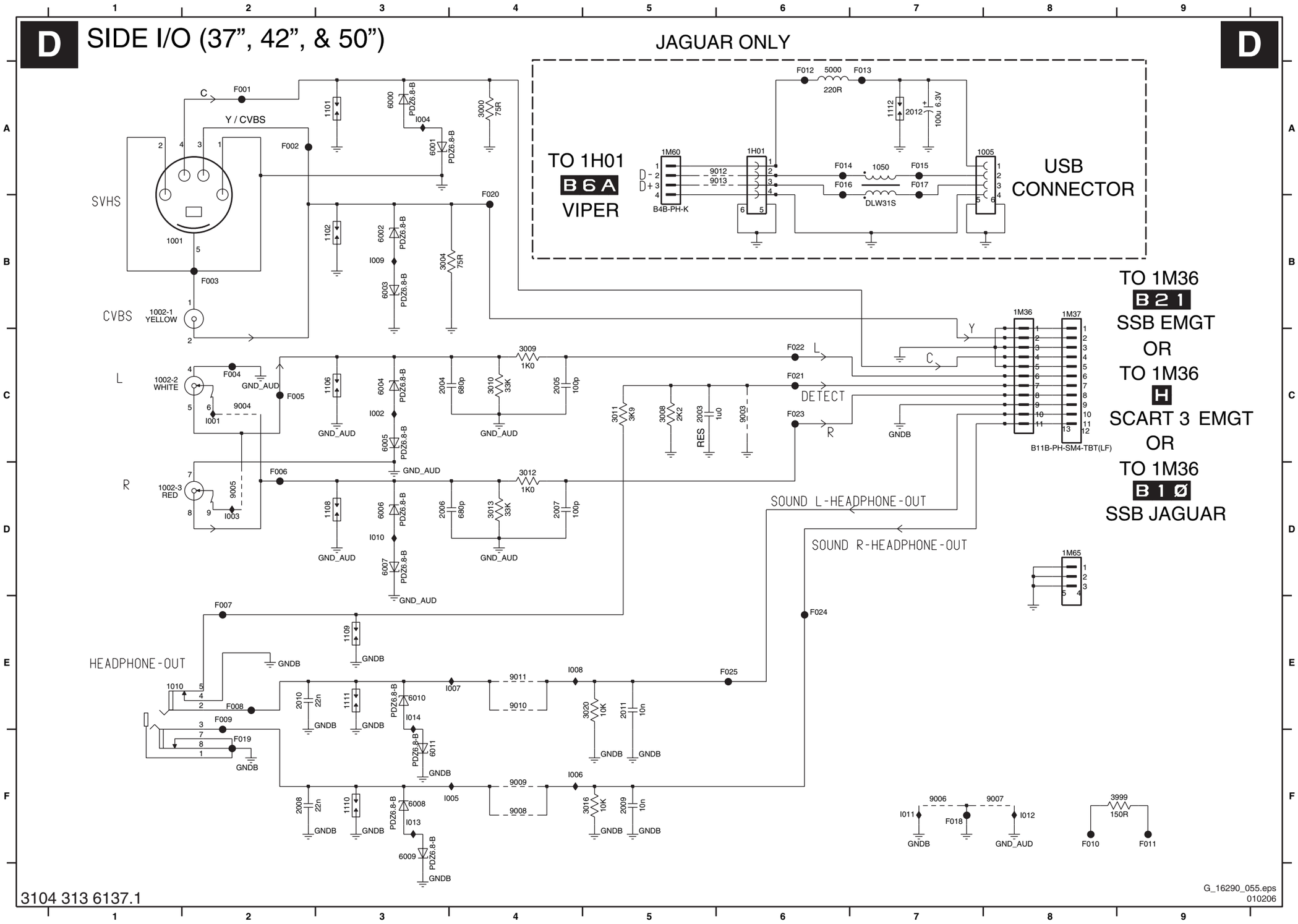

1001 B2	9012 A6
1002-1 B1	9013 A6
1002-2 C1	F001 A2
1002-3 D1	F002 A2
1005 A8	F003 B2
1010 E1	F004 C2
1050 A7	F005 C2
1101 A3	F006 D2
1102 B3	F007 E2
1106 C3	F008 E2
1108 D3	F009 E2
1109 E3	F010 F8
1110 F3	F011 F9
1111 E3	F012 A6
1112 A7	F013 A7
1H01 A6	F014 A6
1M36 B8	F015 A7
1M37 B8	F016 A6
1M60 A5	F017 A7
1M65 D8	F018 F7
2003 C5	F019 F2
2004 C3	F020 B4
2005 C4	F021 C6
2006 D3	F022 C6
2007 D4	F023 C6
2008 F2	F024 E6
2009 F5	F025 E6
2010 E2	I001 C2
2011 E5	I002 C3
2012 A7	I003 D2
3000 A4	I004 A3
3004 B3	I005 F4
3008 C5	I006 F4
3009 C4	I007 E4
3010 C4	I008 E4
3011 C5	I009 B3
3012 D4	I010 D3
3013 D4	I011 F7
3016 F5	I012 F8
3020 E5	I013 F3
3999 F9	I014 E3
5000 A6	
6000 A3	
6001 A3	
6002 B3	
6003 B3	
6004 C3	
6005 C3	
6006 D3	
6007 D3	
6008 F3	
6009 F3	
6010 E3	
6011 F3	
9003 C6	
9004 C2	
9005 D2	
9006 F7	
9007 F8	
9008 F4	
9009 F4	
9010 E4	
9011 E4	

Layout Side I/O Panel: (37” & 42”) (Top Side)

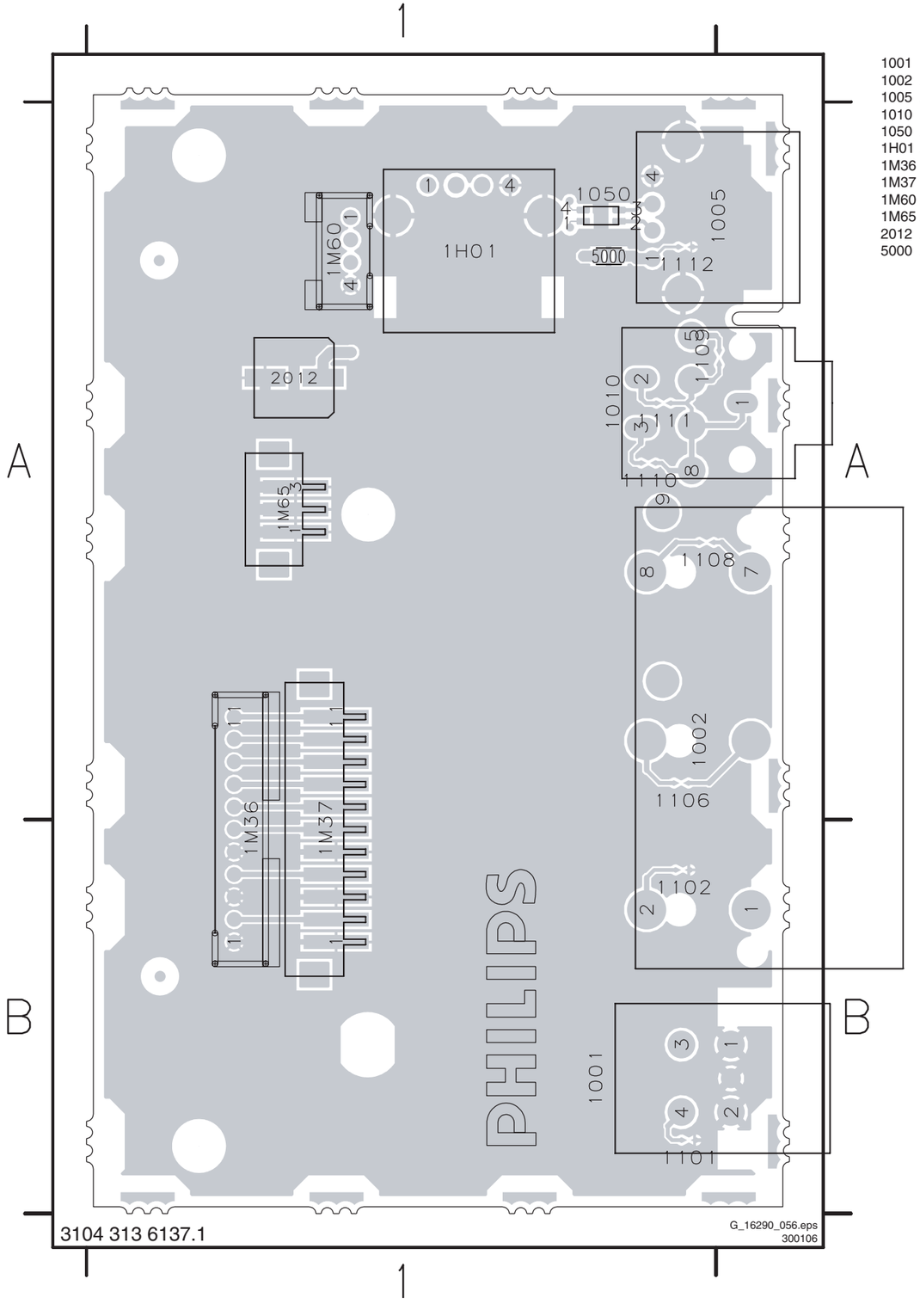

Layout Side I/O Panel: (37” & 42”) (Bottom Side)

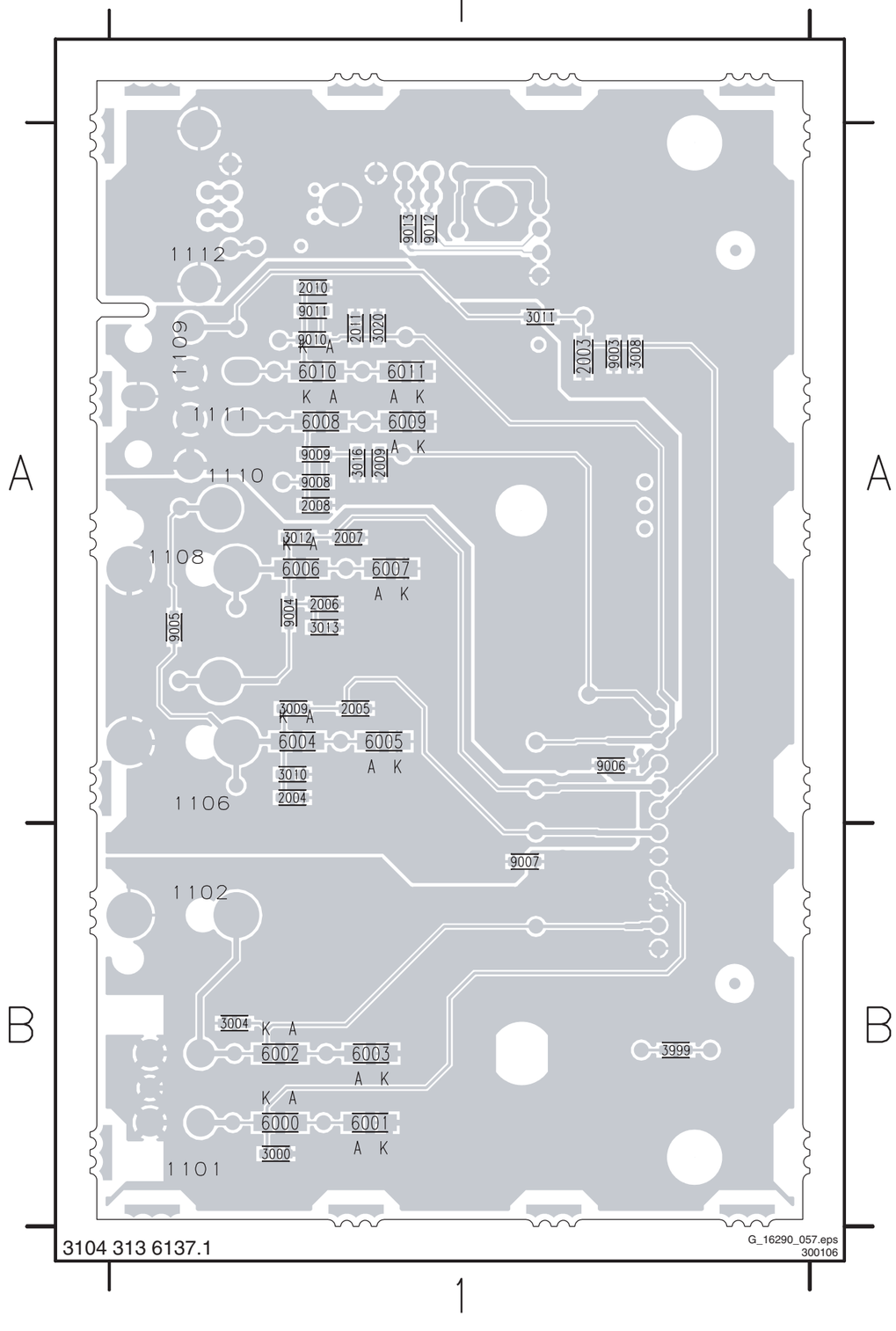

Control Panel (26” & 32”)

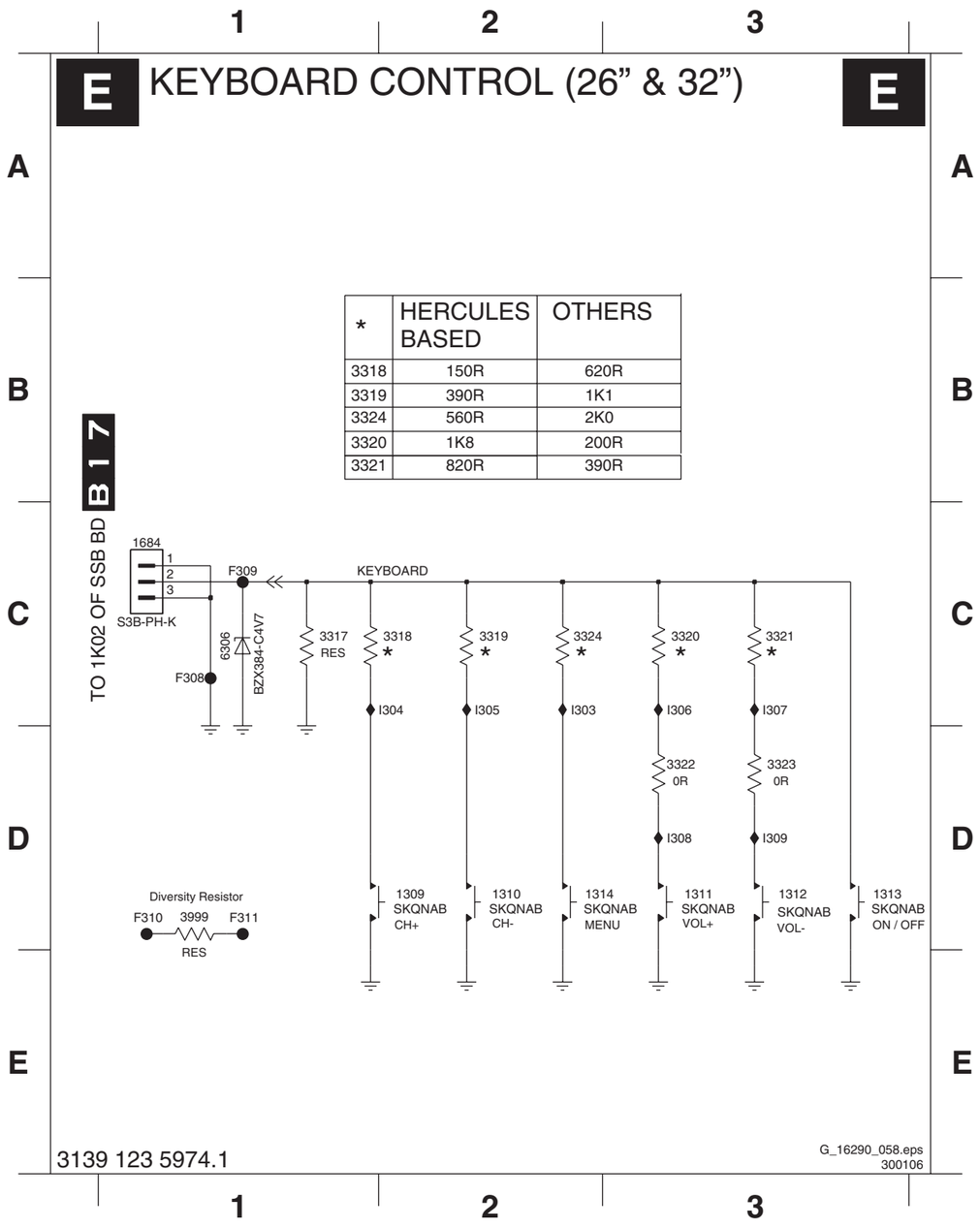

*	HERCULES BASED	OTHERS
3318	150R	620R
3319	390R	1K1
3324	560R	2K0
3320	1K8	200R
3321	820R	390R

Control Panel (37” & 42”)

1701 A1 1704 A2 1M01 A4 3004 C1 3007 C1 3999 C4 9003 C2 F003 C4 I007 C1 I010 C2 I102 B1 I105 B3
1702 A1 1705 A1 3002 C2 3005 C1 3008 C1 9001 C3 F001 A4 F004 C4 I008 C1 I100 B1 I103 B2
1703 A2 1706 A3 3003 C2 3006 C1 3009 C2 9002 C1 F002 A4 I006 C1 I009 C2 I101 B1 I104 B2

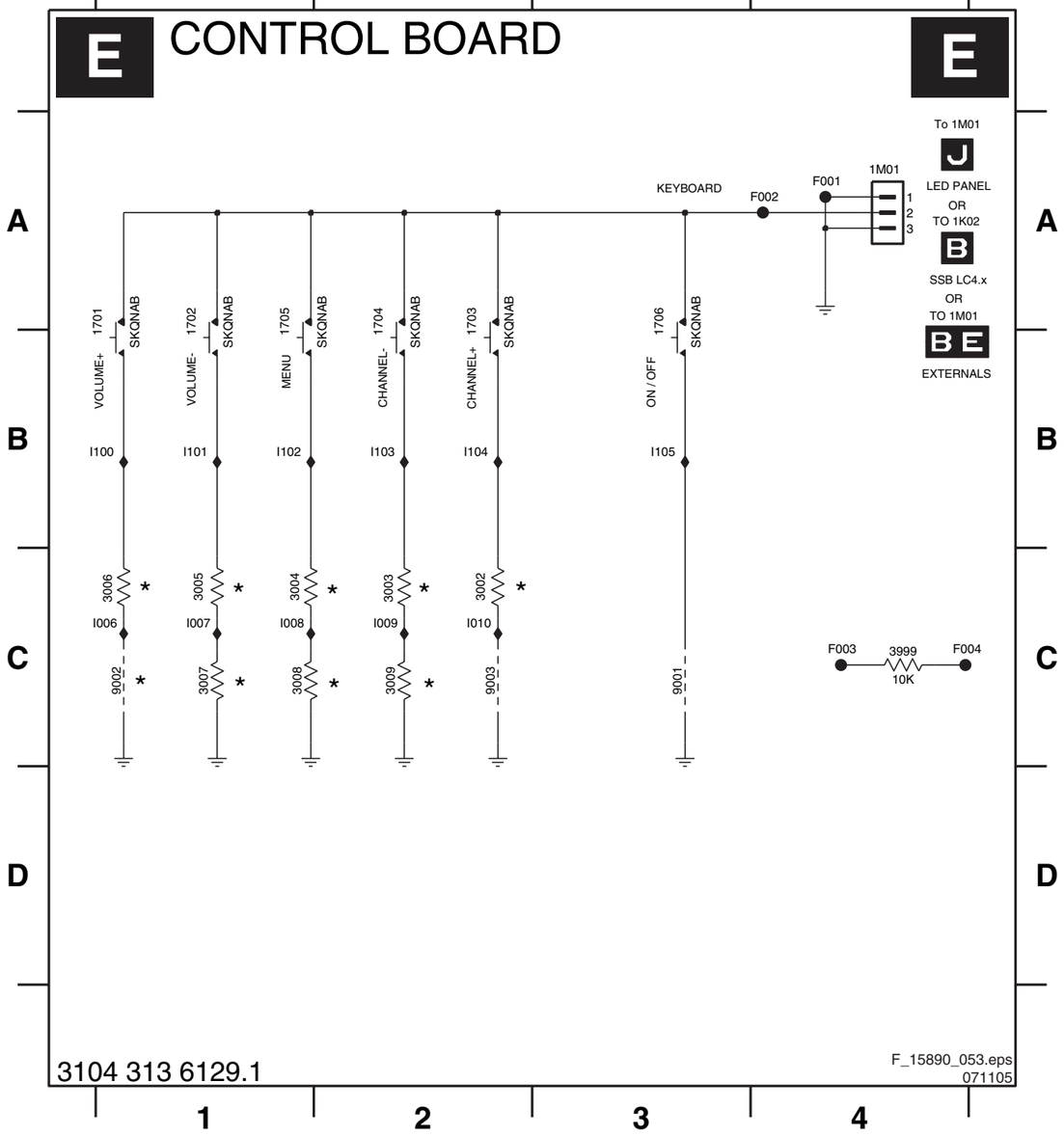

Layout Control Panel (26” & 32”) (Top Side)

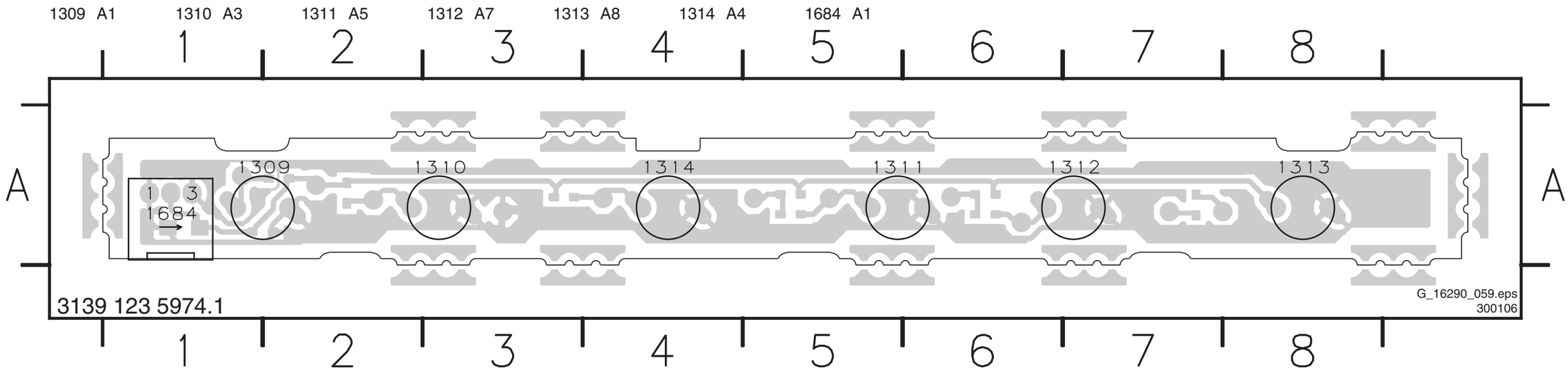

Layout Control Panel (26” & 32”) (Bottom Side)

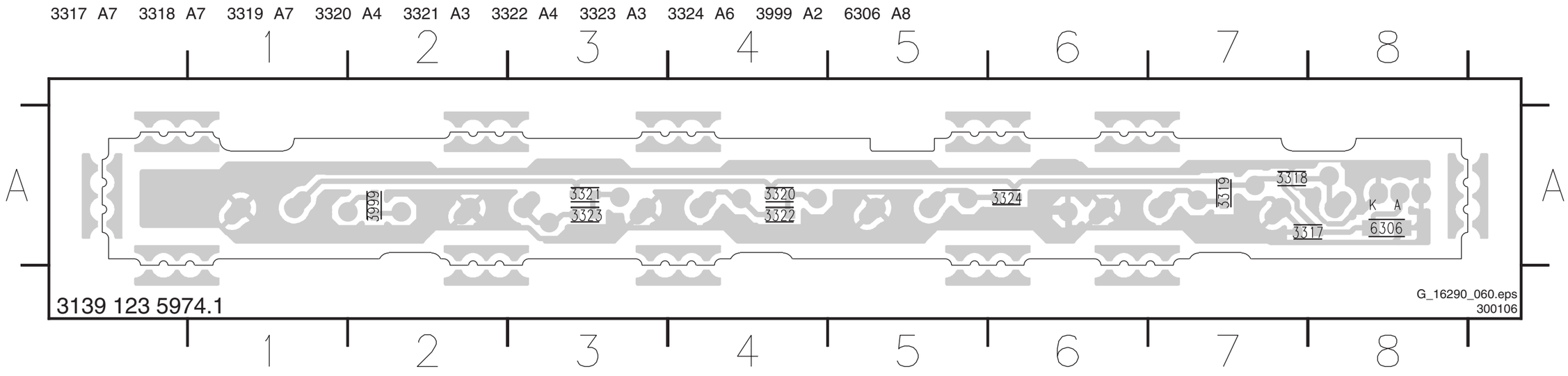

Layout Control Panel (37” & 42”) (Top Side)

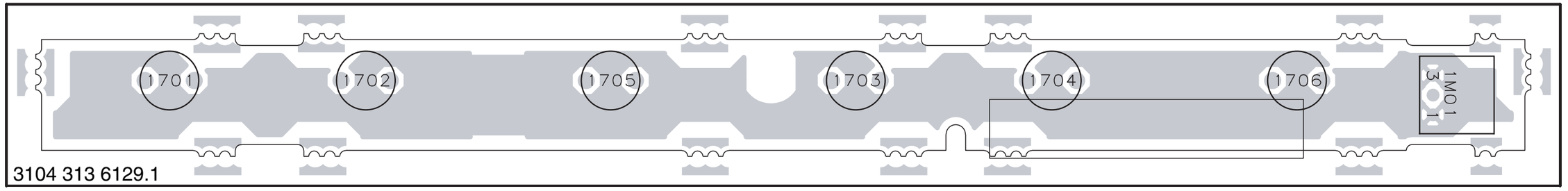

F_15890_057.eps
071105

Layout Control Panel (37” & 42”) (Bottom Side)

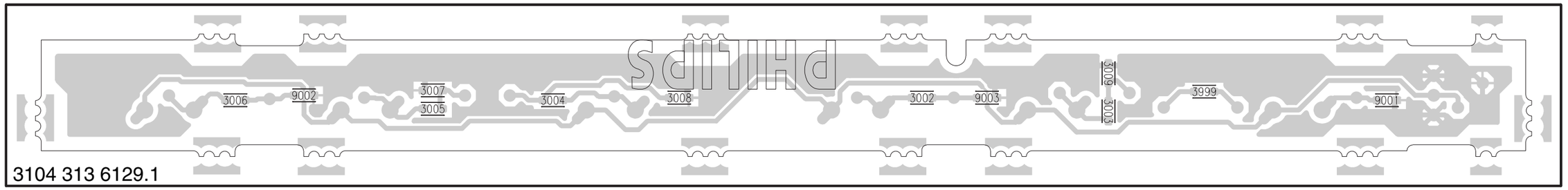

F_15890_058.eps
071105

Front IR / LED Panel (26”)

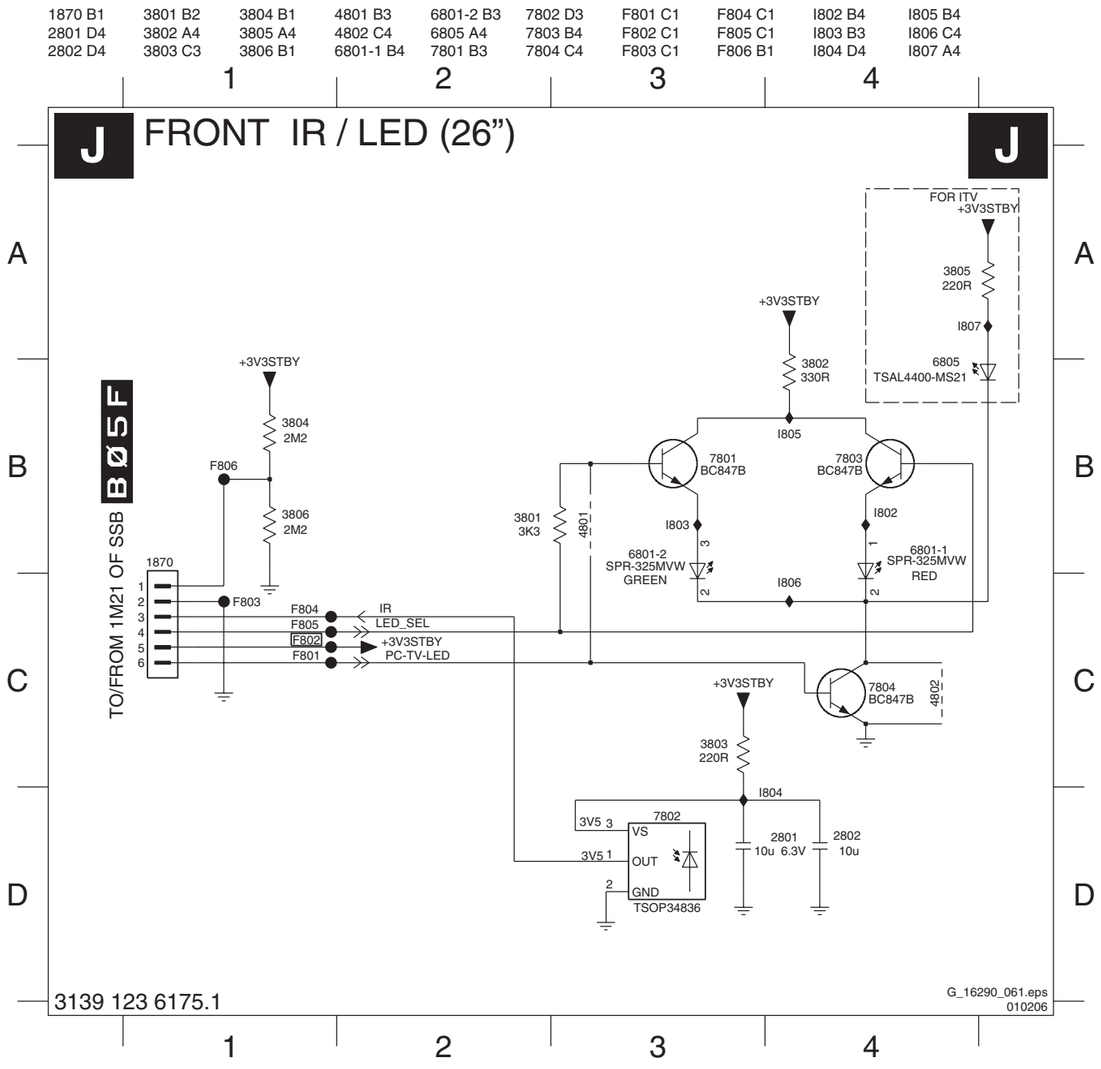

Layout Front IR / LED Panel (26”) (Top Side)

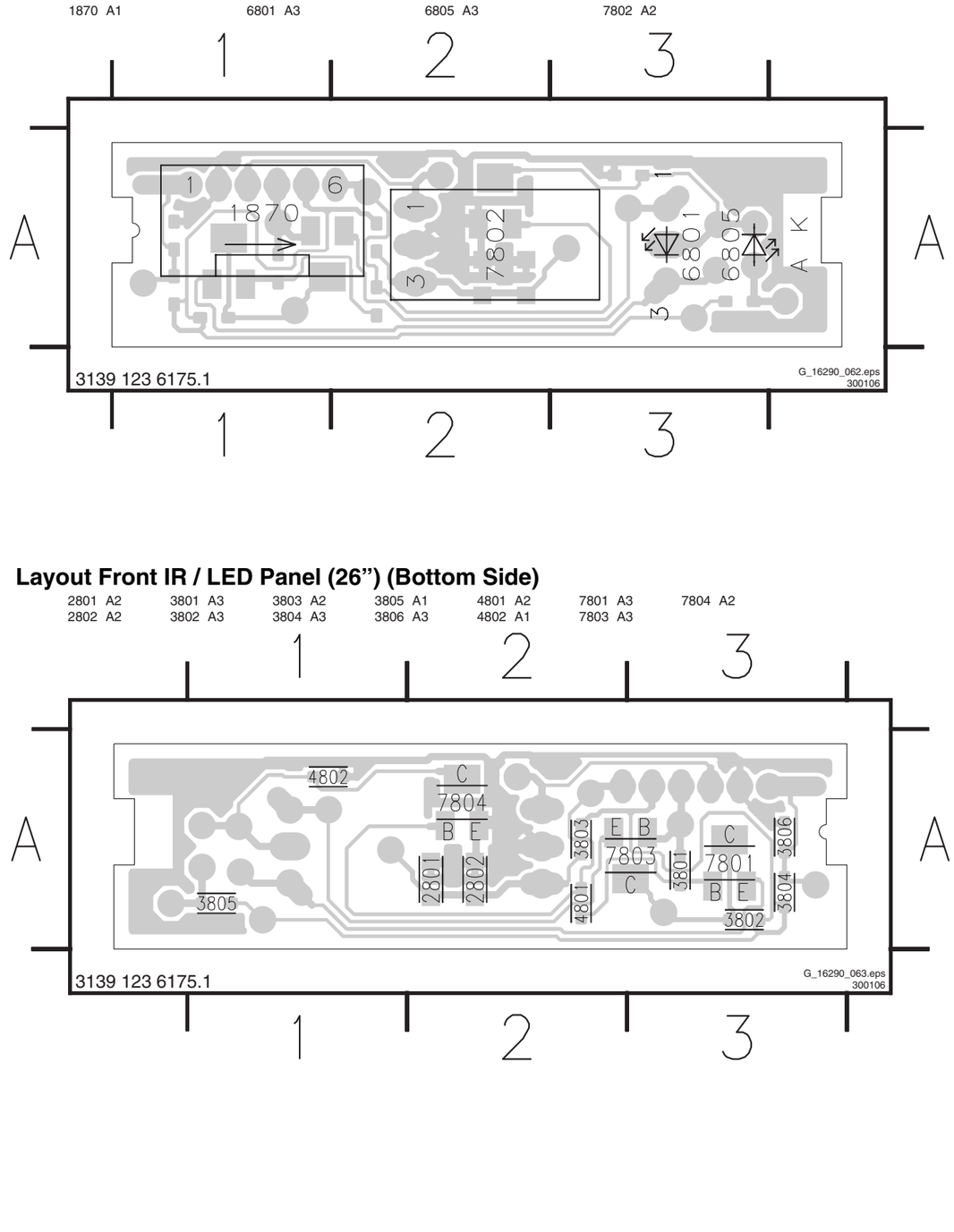

Layout Front IR / LED Panel (26”) (Bottom Side)

Front IR / LED Panel (32”, 37”, & 42”)

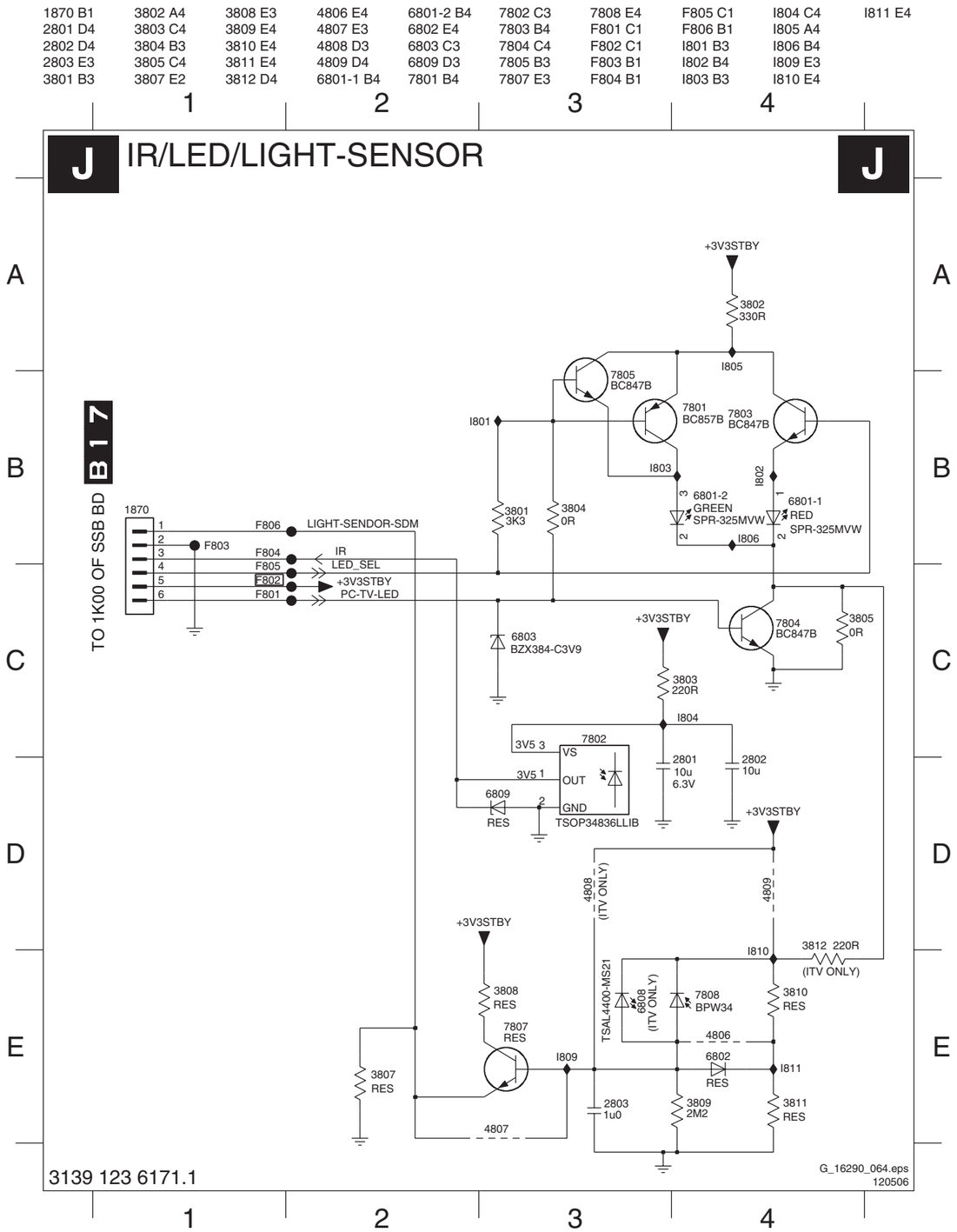

Layout Front IR / LED Panel (32”, 37”, & 42”) (Top Side)

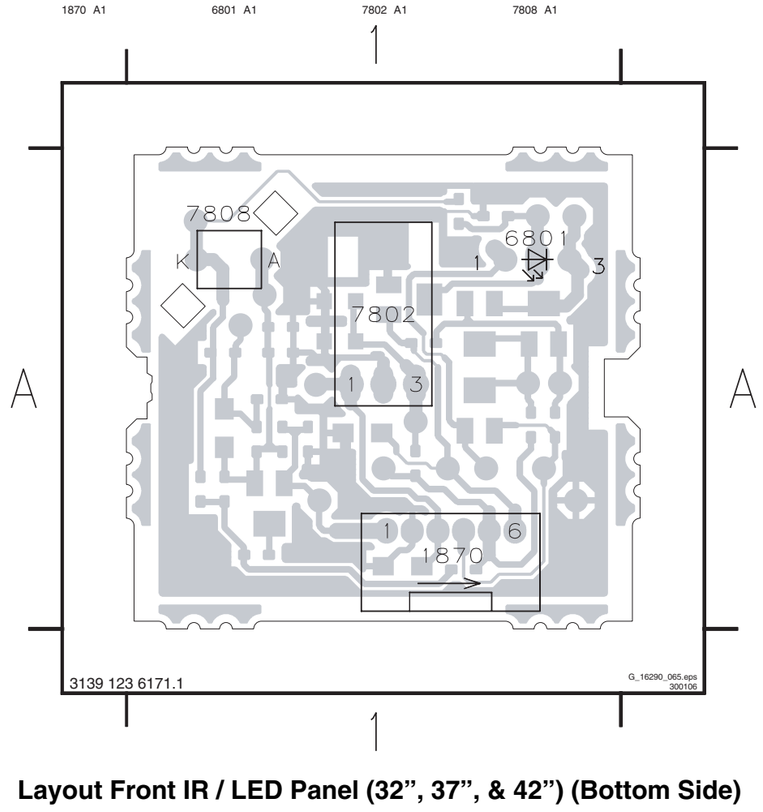

Layout Front IR / LED Panel (32”, 37”, & 42”) (Bottom Side)

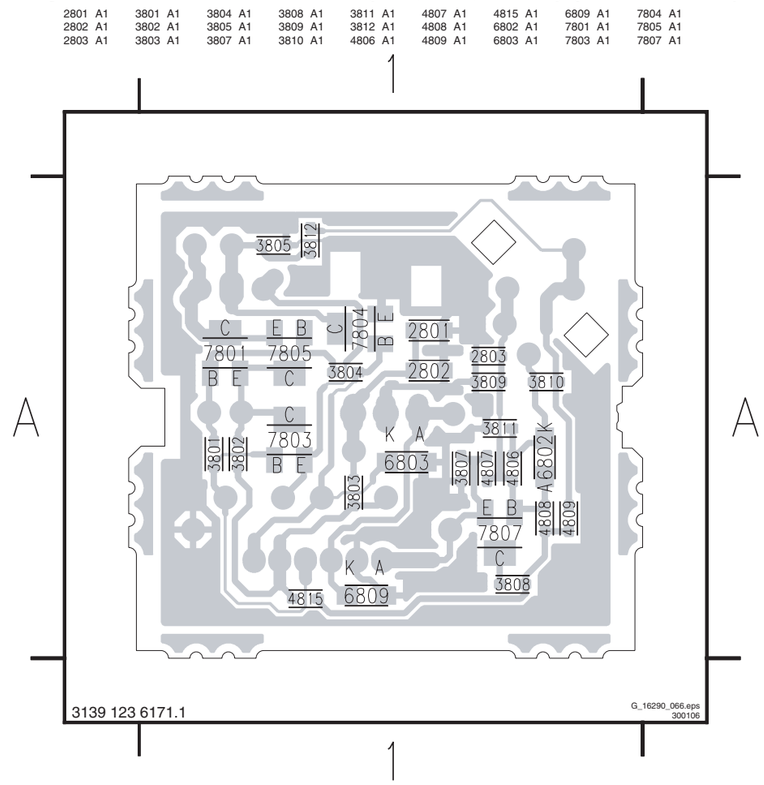

Standby/Audio Panel: Connections

SA1 CONNECTIONS

SA1

TO 1J02 B EL1.X

TO 1M46 B FTV 2.X BL 2.X JL 2.X LC 4.X

TO DISPLAY 1316 B12P-PH-K

TO DISPLAY 1317 B12P-PH-K

1318 B6B-PH-K

+5V_SW +5V_SW 9008 9009 RES

F137 F138

9002 RES 9003 RES

GND-SSP GND-SSP GND-SSP

GND-SSP

F105 F104

DIM_CONTROL SA1 (3x)

ON_OFF SA1 (3x)

DIM_CONTROL SA1 (3x)

ON_OFF SA1 (3x)

DIM_CONTROL SA1 (3x)

POR SA2

ON_OFF

F111 F113 F115

GND-SSP

+5V_SW 9113 I551

STANDBY F121

PROT_AUDIOSUPPLY F139

F122

+5V2-RELAY-IO2_PWM

DRIVE_AMBILIGHT

1M03 B10P-PH-K-S

9013

TO DISPLAY 1319 B14B-PH-K

GND-SSP 9012 I550 9014 GND-SSP

TO 1303 A LCD SUPPLY 42"

1303 B4P-VH

+24V_2 F103

1320 B3P-VH

GND-SSP

TO 1320 A LCD SUPPLY 42"

6516 BAS316 I525

3526 470R

VTUN

100K 3525

BZX384-C15 6515

BSP030 7515

9016

I524

2517 4u7 50V

220K 3520

3527 100R

GND-SSP GND-SSP

F140 1M10 B4B-PH-K

TO 1M10 AL AMBI LIGHT

F110

F101 +12V_+24V

1304 B4P-VH

9018

F108 +12V_A

TO 1304 A LCD SUPPLY 30"/37"/42"

9004 5018 68u 9010

9005 5019 68u 9011

F120 F119

9006 9007

3190 1K2 3191 1K2 3192 1K2

GND-SSP

TO DISPLAY 1314 B10P-PH-K-S

TO DISPLAY 1315 B10P-PH-K-S

GND-SSP

1M46 B11B-PH-K

F131 GND-SSP

+8V6 F135

+12V F136

+5V_SW F109

GND-SSP +5V2 F132

VTUN F114

+12V

9001 F117

TO 1J02 B EL1.X

TO 1M46 B FTV 2.X BL 2.X JL 2.X LC 4.X

1M63 B2B-PH-K +5V_SW GND-SSP

1309 B3P-VH F112 GND-SSP

TO 1309 A LCD SUPPLY 30"/32"/37"/42"

0001 GND screw 1 GND-SSP

0002 GND screw 1 GND-SSP

0003 GND screw 1 GND-SSP

1M49 B4B-PH-K I552 I553 I554 I555 1K49 B4B-PH-K

1D40 B5B-PH-K I556 I557 I558 I559 I560 1D42 B5B-PH-K

F_15710_116.eps 010206

3104 313 6064.4

0001 F4 F140 B8
0002 F4 I524 C8
0003 F5 I525 C7
1303 B7 I550 C6
1304 C8 I551 C4
1309 E7 I552 F6
1314 E1 I553 F6
1315 E2 I554 F6
1316 B1 I555 F6
1317 B2 I556 F7
1318 B3 I557 F8
1319 B6 I558 F7
1320 B7 I559 F8
1D40 F7 I560 F7
1D42 F8
1K49 F6
1M03 B5
1M10 B9
1M46 E4
1M49 F6
1M63 E6
2517 C7
3190 E7
3191 E7
3192 E7
3520 C8
3525 C7
3526 C7
3527 D7
5018 D6
5019 D6
6515 B8
6516 C7
7515 C8
9001 F3
9002 C3
9003 C3
9004 C6
9005 D6
9006 D7
9007 D7
9008 B3
9009 B3
9010 D6
9011 E6
9012 C5
9013 C5
9014 C6
9016 B8
9018 C9
9113 C4
F101 C9
F103 B7
F104 C3
F105 C3
F108 C9
F109 E3
F110 B8
F111 B4
F112 E7
F113 B5
F114 E3
F115 C4
F117 F3
F119 D6
F120 D6
F121 C4
F122 C5
F131 E3
F132 E3
F135 E3
F136 E3
F137 B3
F138 B3
F139 C4

Standby/Audio Panel: Standby (32”& Up)

SA2 STANDBY

SA2

HOT GROUND

COLD GROUND

TO 1306 A — LCD SUPPLY 30”/32”/37”/42” — B2P-VA-BF-BK

TO 1307 A — LCD SUPPLY 30”/32”/37”/42” — B4P-VH

TO 1305 A 1 — LCD SUPPLY 30”/37”/42” — B3B-EH-A

SA2 Prot-OVV

SA3(2x), SA1 PROT_AUDIOSUPPLY

SA1 POR

SA1 STANDBY 0V2 (0V2)

SA1 DRIVE_AMBILIGHT

+5V2-RELAY-IO2_PWM

3104 313 6064.4

F_15710_117.eps 010206

1301	B1	3506	H11	7511	A8	I186	G6
1305	D13	3507	F13	7512	A10	I187	D11
1306	B3	3508	G13	7513	B7	I188	D9
1307	H3	3509	A7	7514	A9	I189	H10
1310	A13	3510	F12	7531	E10	I190	G1
1311	A12	3511	C8	7532	D9	I191	G4
2101	C1	3512	C9	7560	E12	I192	H9
2102	F1	3513	D9	9015	E11	I197	C9
2103	D2	3514	A7	9019	A7	I198	D7
2105	D2	3515	A8	9020	C3	I199	D4
2107	B4	3516	A9	9021	B3	I501	F6
2108	B4	3517	A11	9022	B3	I502	F6
2109	F7	3518	A7	9023	C2	I503	F6
2110	G2	3519	A8	9024	D13	I504	G12
2111	E2	3521	B7	9110	H9	I505	F12
2112	E3	3522	A9	9111	D1	I506	F13
2115	E6	3523	A9	9112	E9	I507	F13
2118	D7	3524	A10	9120	B11	I508	A8
2123	E4	3528	C11	9121	B12	I509	A9
2124	H2	3529	C11	F100	E4	I510	A9
2129	B6	3530	D13	F123	B3	I511	A10
2131	C10	3531	D13	F124	B3	I512	H9
2132	C10	3532	C12	F125	E12	I513	D1
2140	G8	3533	D12	F126	E12	I514	E6
2141	D7	3534	H9	F127	H3	I515	E9
2143	D7	3535	H9	F128	H4	I516	D9
2144	F2	3536	H10	F129	H4	I517	C13
2145	D3	3537	H9	F130	H4	I518	B7
2149	G7	3538	F8	I133	H7	I519	B8
2150	H5	3539	H10	I134	H8	I520	A8
2152	B4	3540	G12	I100	B4	I521	A8
2153	F5	3541	G12	I101	B6	I522	A9
2154	G9	3542	H12	I102	B6	I523	A9
2159	E2	3543	D12	I103	C9		
2160	C9	3544	G12	I104	C9		
2162	D2	3560	E11	I105	B6		
2163	G1	3561	F12	I106	C10		
2503	D10	3562	E12	I107	C8		
2506	D5	3999	H7	I108	C8		
2507	C6	5102	E1	I109	C11		
2508	C6	5103	E6	I110	C2		
2509	G13	5104	C5	I111	C3		
2510	E7	5105	D5	I112	C9		
2511	B9	5106	D1	I113	C4		
2512	E9	5108	D4	I114	C6		
2513	E7	5110	B6	I115	C11		
2515	A10	5112	D6	I116	C10		
2518	A8	5115	B8	I117	C12		
2522	A9	5500	C5	I118	C5		
2523	A9	5501	B3	I119	C4		
2533	F11	5504	B3	I120	C6		
2534	E8	5505	B4	I121	C12		
2535	D9	5506	E8	I122	C1		
2536	D11	5507	B10	I123	C6		
2537	D13	5508	E9	I124	C5		
2538	H9	6103	C1	I125	D8		
2539	E8	6104	E2	I126	D9		
2540	H12	6105	D3	I127	B8		
2544	G12	6106	F2	I128	D7		
3100	G3	6107	E7	I129	D7		
3101	D2	6108	G2	I130	C3		
3102	E2	6109	A8	I131	C2		
3103	D2	6110	A8	I132	D4		
3104	D3	6113	C7	I133	D4		
3105	D2	6114	G1	I134	D2		
3106	E1	6115	D3	I135	D3		
3107	F1	6116	F4	I136	D2		
3108	D4	6117	C2	I137	E7		
3109	F1	6118	C2	I138	E7		
3110	G1	6119	C3	I139	E12		
3111	D1	6120	G7	I140	C1		
3112	G1	6121	G7	I141	D2		
3113	E7	6122	F7	I142	D2		
3114	F6	6125	B8	I143	D2		
3115	E6	6130	C9	I144	D2		
3116	A7	6132	C9	I145	D3		
3117	D3	6133	D8	I146	D4		
3118	A7	6134	C9	I147	E1		
3122	B6	6140	D6	I148	E10		
3123	F7	6142	F2	I149	E7		
3124	F7	6144	E3	I150	E12		
3125	F3	6147	D4	I151	E12		
3126	F3	6148	F8	I152	F12		
3127	F3	6149	F9	I153	E1		
3128	F6	6150	G4	I154	E4		
3132	D9	6151	G4	I155	E3		
3134	C10	6153	H5	I156	E4		
3135	C9	6156	G5	I157	F6		
3137	B8	6503	D9	I158	F7		
3138	E2	6504	B6	I159	F8		
3139	B8	6505	E7	I160	F7		
3140	C8	6508	H9	I161	F9		
3141	F9	6510	C13	I162	E1		
3142	G8	6511	A8	I163	F8		
3145	G2	6513	A8	I164	F7		
3146	F4	6514	B7	I165	G7		
3147	H2	6517	A7	I166	F3		
3148	E4	6531	F10	I167	F3		
3149	E4	6532	C11	I168	G9		
3150	D4	6540	F12	I169	F1		
3152	E3	6562	F12	I170	G7		
3153	C8	7100	F3	I171	F5		
3155	G4	7101	D3	I172	F2		
3156	G5	7102	C4	I173	F2		
3157	H5	7105	F4	I174	F2		
3158	G6	7131	B9	I175	F4		
3159	E8	7140	G10	I176	G7		
3160	D3	7150	G5	I177	F1		
3161	C9	7501	F6	I178	G13		
3171	C9	7503	D10	I179	G12		
3172	C10	7505	G12	I180	G4		
3175	G8	7506	C11	I181	G1		
3176	G9	7507	C12	I182	G12		
3502	C9	7508	H10	I183	G5		
3503	D11	7509	H12	I184	G5		
3504	D11	7510	F13	I185	F3		

Standby/Audio Panel: Audio (32"& Up)

0044 D14 0045 B1 1735 F2 1736 G2 1737 F7 1738 F7 1739 F5 1M02 A9 2702 B5 2704 C2
2705 A7 2706 B4 2707 B4 2708 G4 2709 D6 2710 D6 2711 E2 2712 E5 2713 B7 2714 C3
2715 F4 2716 B3 2717 G4 2718 E3 2719 F5 2720 F4 2721 C1 2722 D1 2723 F8 2725 F6
2726 E2 2727 E2 2728 B3 2729 F3 2741 F11 2743 F13 2753 E13 2754 D11 2755 D11 2756 G12
2758 G9 2759 F8 2762 E13 2764 B2 2766 A4 2768 E5 2769 E5 2777 D1 2778 C5 2779 E2
2780 E5 2781 E5 2782 D12 2783 D7 2784 D13 2785 B13 2786 B4 2787 C5 2788 D1 2789 D2
2790 E2 2791 C7 2792 G8 2793 D13 2794 C9 2795 D13 2796 C10 2797 D8 2798 E8 2799 D13
3701 E6 3702 B6 3703 A6 3704 B6 3705 E4 3706 E6 3707 D6 3708 F6 3709 F5 3710 B3
3711 E4 3712 E3 3713 D7 3714 C6 3715 B6 3716 B6 3717 F3 3718 G4 3720 F7 3721 C1
3722 C1 3723 C1 3724 F1 3725 B4 3726 F1 3727 F5 3729 G9 3730 F7 3741 F11 3743 F3
3744 G11 3746 C6 3747 C6 3748 C5 3749 A7 3750 G3 3751 G8 3752 B8 3753 G8 3754 C8
3755 B10 3756 F3 3757 G3 3758 C10 3759 D8 3760 E8 3761 B12 3762 B12 3763 C12 3764 C12
3765 C12 3766 C14 3767 B12 3768 B13 3790 B4 3791 C2 3792 B3 3793 B4 3794 D11 3795 C5
3796 E11 3797 C5 3798 D6 5701 F4 5702 F2 5703 B5 5704 F7 5705 F6 5707 D1 5708 E1
5711 E6 5712 E4 5723 D13 5730 F2 5731 G2 5732 G8 6701 C6 6702 B12
6703 C12 6704 B6 6710 D8 6711 E8 7700 C3 7701 B7 7702 E11 7703 C7 7704 B5 7705 B6
7706 C6 7707 C5 7708 C13 7709 C13 7710 B13 7711 B13 7712 D9 7713 E9 7714 C5 7715-1 C9
7715-2 C11 9717 B5 9718 B13 F708 F2 F710 G2 F711 A2 F712 B2 F713 C2 F714 B5 F718 D10
F720 G8 F721 G2 F722 F2 F731 G8 F736 G7 F737 G6 F738 F2 F739 G2 F741 G8 F742 B9
F743 B9 F744 B9 F745 A9 F747 G5 F748 G5 F749 G6 F751 F6 I700 E6 I701 E6 I702 A6
I703 B6 I704 A6 I705 D6 I706 D5 I707 E3 I708 F11 I709 C3 I710 F5 I711 B4 I712 A5
I713 B3 I714 C8 I715 A7 I716 C3 I717 B5 I718 B5 I719 F3 I720 C8 I721 E4 I722 B2
I723 B9 I724 E2 I725 E1 I726 C2 I727 B5 I728 C9 I729 C5 I730 F7 I731 B11 I732 C6
I733 C10 I734 F12 I735 D8 I736 E8 I737 C6 I738 F4 I739 D6 I740 D9 I741 E9 I742 C12
I743 C12 I744 E6 I745 B4 I746 E13 I747 D11 I748 F4 I749 E4 I750 B12 I751 A12 I752 E13
I753 F4 I754 E2 I755 F4 I756 C1 I757 D2 I758 G12 I759 F12 I760 C5 I761 F8 I762 D11
I763 C6 I764 D13 I765 D13 I766 G9 I767 F2 I768 G3 I769 F3 I771 G3 I772 F8
I773 G9 I774 F9 I775 F7 I776 E4 I778 E2 I779 E2 I780 E13 I781 C13 I782 C13
I783 B2 I784 F4 I785 B4 I786 B4 I787 C4 I788 E5 I790 F3 I791 B12 I792 B13 I793 B13
I794 B12 I795 F6 I796 C12 I797 C12 I798 E5 I799 E3

1 2 3 4 5 6 7 8 9 10 11 12 13 14

A B C D E F G

SA3 AUDIO **NOTE: AUDIO AMPLIFIER PART IS NOT USED FOR EL1.1U CHASSIS** **SA3**

SA3 AUDIO-L F711 · SA3 AUDIO-R F712 · SA3 (3x) PROT1 · SA3 DCPROT · SA3 AUDIO-SW · SA3 DCPROT

TO 1M02 A LCD SUPPLY 30"/37"/42" — 1M02 B7B-EH-A: F745, F742 +16V+19V, F743, F744 -16V-19V

TO 1M52 B FTV 2.X BL 2.X JL 2.X LC 4.C — 1739 B9B-PH-K: POR-CLASSD, SOUND-ENABLE, PROT_AUDIOSUPPLY, AUDIO-SW, AUDIO-R, AUDIO-L

15W/8 R — 1735 B3B-PH-K, F722, F708, F738, I767, 5730, PLT09H

15W/8 L — 1736 B3B-PH-K, F710, F721, F739, I770, 5731, PLT09H

15W/8 CENTERWOOFER — 1737 B2B-PH-K, 1736 B3B-PH-K, F741, F720, F731, I772, PLT09H, 5732

SA1,SA2,SA3 PROT_AUDIOSUPPLY

0044 HEATSINK

3104 313 6064.4

F_15710_118.eps 010206

Layout Standby/Audio Panel (32”& Up) (Top Side)

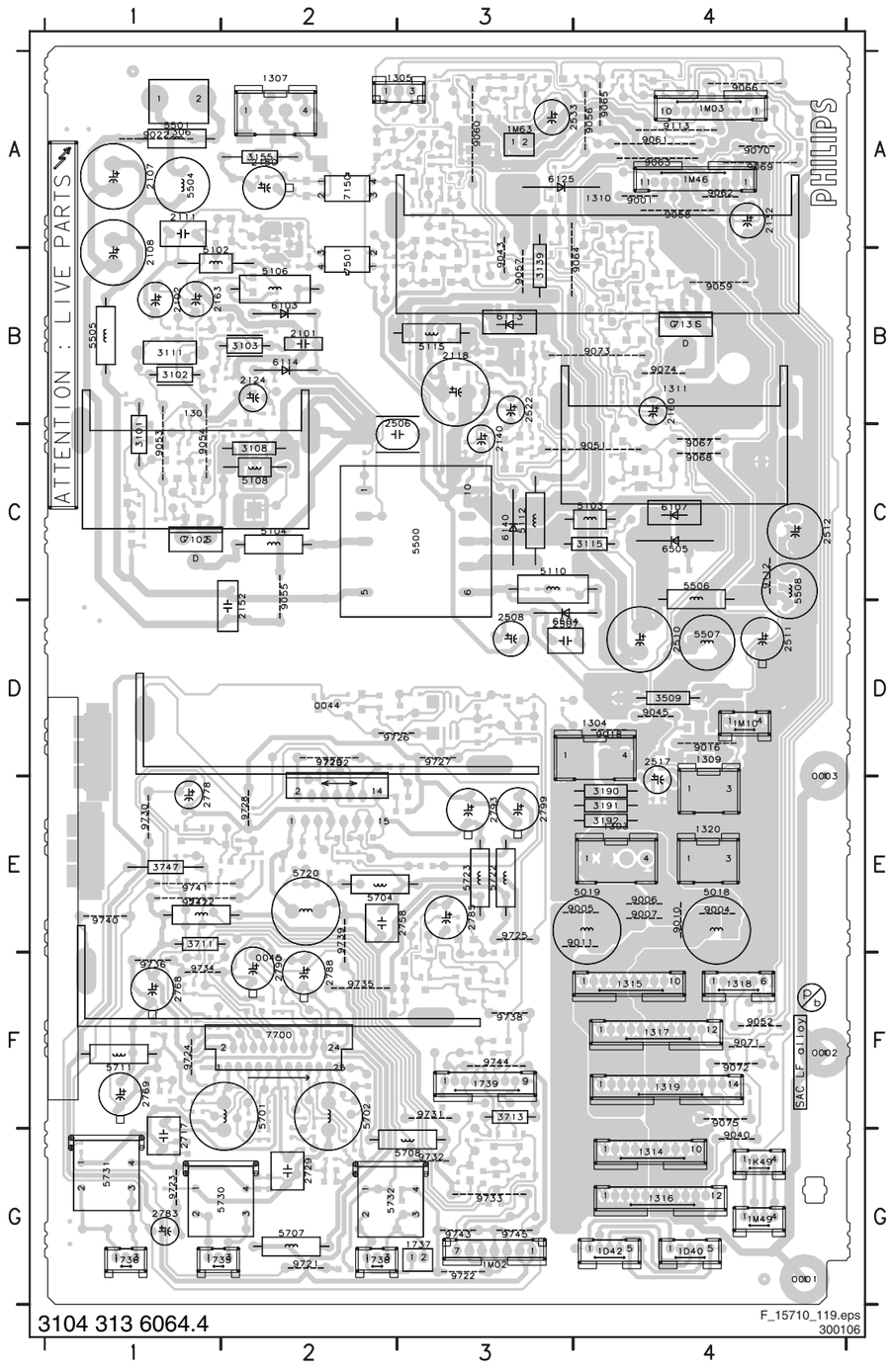

0001 G4 5102 B2 9725 E3
0002 F4 5103 C4 9726 D2
0003 D4 5104 C2 9727 D3
0044 D1 5106 B2 9728 E2
0045 E1 5108 C2 9729 D2
1301 C1 5110 C3 9730 E1
1303 E4 5112 C3 9731 F3
1304 D4 5115 B3 9732 G3
1305 A3 5500 C3 9733 G3
1306 A1 5501 A1 9734 F1
1307 A2 5504 A1 9735 F3
1309 D4 5505 B1 9736 F1
1310 A3 5506 C4 9738 F3
1311 B4 5507 D4 9739 F2
1314 G4 5508 C4 9740 E1
1315 F4 5701 F2 9741 E1
1316 G4 5702 F2 9742 E1
1317 F4 5704 E2 9743 G3
1318 F4 5707 G2 9744 F3
1319 F4 5708 G3 9745 G3
1320 E4 5711 F1
1735 G1 5712 E1
1736 G1 5720 E2
1737 G3 5722 E3
1738 G2 5723 E3
1739 F3 5730 G2
1D40 G4 5731 G1
1D42 G4 5732 G3
1K49 G4 6103 B2
1M02 G3 6107 C4
1M03 A4 6113 B3
1M10 D4 6114 B2
1M46 A4 6125 A3
1M49 G4 6140 C3
1M63 A3 6504 D3
2101 B2 6505 C4
2102 B1 7102 C1
2107 A1 7131 B4
2108 A1 7150 A2
2111 A1 7501 B2
2118 B3 7700 F2
2124 B2 7702 D2
2132 A4 9001 A4
2140 C3 9004 E4
2150 A2 9005 E4
2152 D2 9006 E4
2160 B4 9007 E4
2163 B1 9010 E4
2506 B2 9011 E4
2507 D3 9016 D4
2508 D3 9018 D4
2510 D4 9022 A1
2511 D4 9040 G4
2512 C4 9043 B3
2517 D4 9045 D4
2522 B3 9051 C4
2533 A4 9052 F4
2717 F1 9053 B1
2729 G2 9054 B1
2758 E3 9055 C2
2768 F1 9056 A4
2769 F1 9057 A3
2778 E1 9058 A4
2783 G1 9059 B4
2785 E3 9060 A3
2788 F2 9061 A4
2790 E2 9062 A4
2793 E3 9063 A4
2799 E3 9064 A3
3101 C1 9065 A4
3102 B1 9066 A4
3103 B2 9067 C4
3108 C2 9068 C4
3111 B1 9069 A4
3115 C4 9070 A4
3139 B3 9071 F4
3155 A2 9072 F4
3190 E3 9073 B4
3191 E3 9074 B4
3192 E3 9075 F4
3509 D4 9112 C4
3711 F1 9113 A4
3713 F3 9721 G2
3747 E1 9722 G3
5018 E4 9723 G1
5019 E4 9724 F1

Layout Standby/Audio Panel (32”& Up) (Overview Bottom Side)

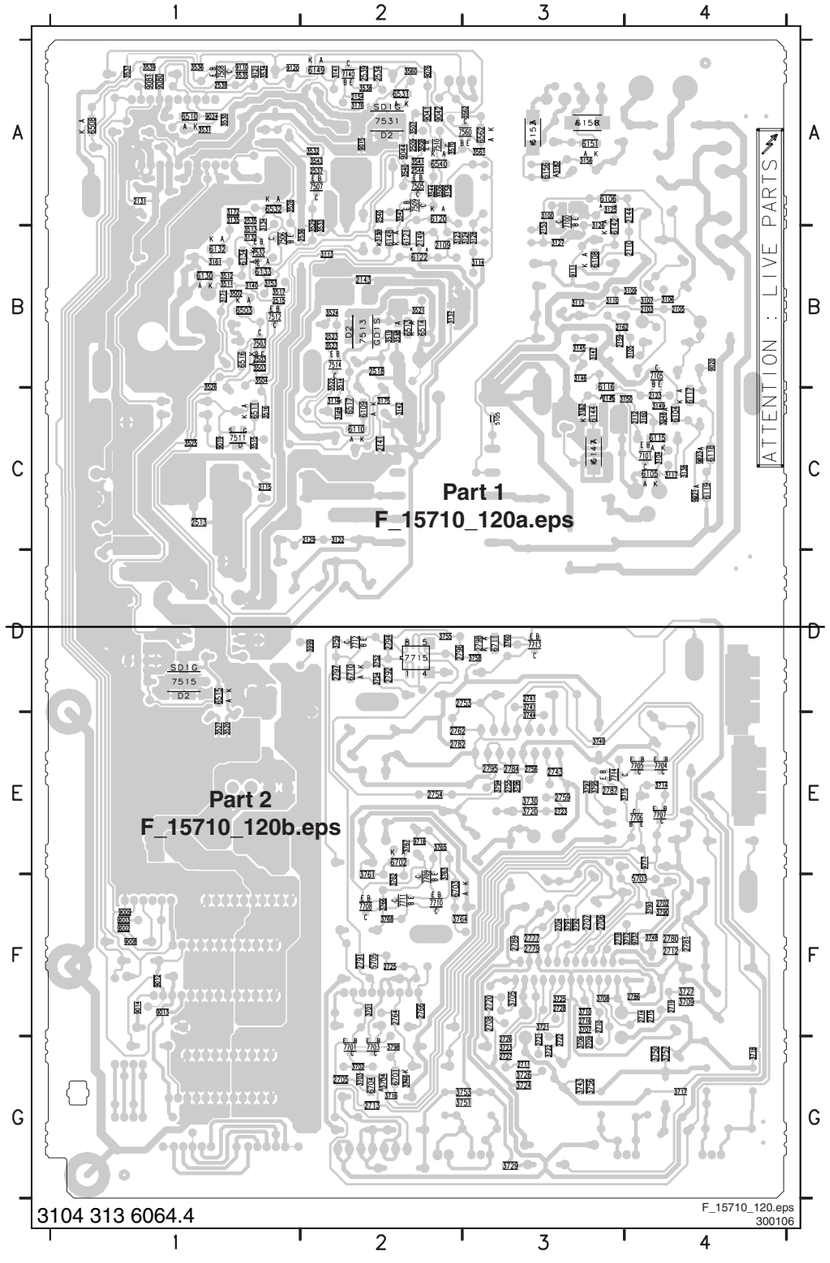

2103 B4 3110 B3 3705 F3 6508 A1
2105 B4 3112 B3 3706 G3 6510 A1
2109 B2 3113 B2 3707 F3 6511 C1
2110 B4 3114 B3 3708 F3 6513 B2
2112 C4 3116 C2 3709 F4 6514 B2
2115 C1 3117 C4 3710 F3 6515 D1
2123 C4 3118 C2 3712 F4 6516 B1
2129 C2 3122 C2 3714 E4 6517 C2
2131 A1 3123 B2 3715 E3 6531 A2
2141 C2 3124 B3 3716 G2 6532 A1
2143 B2 3125 A3 3717 G4 6540 A2
2144 A4 3126 A3 3718 G4 6562 A3
2145 C3 3127 B3 3720 E3 6701 G2
2149 B2 3128 B3 3721 F3 6702 E2
2153 B3 3132 B1 3722 G3 6703 F3
2154 A2 3134 A1 3723 G3 6704 G2
2159 B3 3135 A1 3724 G3 6710 D2
2162 B3 3137 B2 3725 F3 6711 D3
2503 B1 3138 C4 3726 G3 7100 A3
2509 A2 3140 B1 3727 F4 7101 C4
2513 C1 3141 A2 3729 G3 7105 B4
2515 B1 3142 C2 3730 E3 7140 A2
2518 B2 3145 B3 3741 D3 7503 B1
2523 B2 3146 B3 3743 G3 7505 A2
2534 A2 3147 B3 3744 E3 7506 B1
2535 A1 3148 C4 3746 G2 7507 A2
2536 B2 3149 C4 3748 F4 7508 A1
2537 A2 3150 C4 3749 E3 7509 A2
2538 A1 3152 C3 3750 G4 7510 A2
2539 A2 3153 B1 3751 G3 7511 C1
2540 A2 3156 A3 3752 D2 7512 B1
2544 A2 3157 A3 3753 G3 7513 B2
2702 F4 3158 A2 3754 D2 7514 B2
2704 F3 3159 B2 3755 D2 7515 D1
2705 G2 3160 C4 3756 G3 7531 A2
2706 F3 3161 B1 3757 G4 7532 B1
2707 F3 3171 B1 3758 D3 7560 A3
2708 F3 3172 A1 3759 D2 7701 G2
2709 G3 3175 C2 3760 D3 7703 G2
2710 F3 3176 A2 3761 F2 7704 E4
2711 G3 3502 B1 3762 F2 7705 E4
2712 F4 3503 B1 3763 E2 7706 E4
2713 G2 3504 B1 3764 F2 7707 E4
2714 F4 3506 A2 3765 E2 7708 F2
2715 F4 3507 A2 3766 F2 7709 F2
2716 F3 3508 A2 3767 E2 7710 F2
2718 F3 3510 A2 3768 F2 7711 F2
2719 F4 3511 B1 3790 F4 7712 D2
2720 F3 3512 B1 3791 F3 7713 D3
2721 G3 3513 B1 3792 F3 7714 E3
2722 G3 3514 B2 3793 F4 7715 D2
2723 E3 3515 C1 3794 E3 9002 F1
2725 F2 3516 C1 3795 E3 9003 F1
2726 G3 3517 B1 3796 E3 9008 F1
2727 G3 3518 B2 3797 E3 9009 F1
2728 F3 3519 B2 3798 G2 9012 F1
2741 D3 3520 E1 3999 D2 9013 F1
2743 E3 3521 B2 5105 C3 9014 F1
2753 D3 3522 B2 5703 F4 9015 A2
2754 E2 3523 B2 5705 F2 9019 C1
2755 E3 3524 B2 6104 C4 9020 B4
2756 E3 3525 C1 6105 C4 9021 C4
2759 E3 3526 B1 6106 A3 9023 C4
2762 E2 3527 E1 6108 B3 9024 A1
2764 F2 3528 A1 6109 C2 9041 A2
2766 F2 3529 B2 6110 C2 9042 A2
2777 F3 3530 A1 6115 C4 9044 A2
2779 F3 3531 A1 6116 B3 9076 A2
2780 F4 3532 A2 6117 B4 9080 A1
2781 F4 3533 B2 6118 C4 9081 A1
2782 E2 3534 A1 6119 C4 9110 A1
2784 E3 3535 A1 6120 A2 9111 B3
2786 F4 3536 A1 6121 B2 9120 A1
2787 E3 3537 A1 6122 B2 9121 A1
2789 F3 3538 A2 6130 B1 9717 E4
2791 F2 3539 A1 6132 B1 9718 E2
2792 D2 3540 A2 6133 B1 9737 F4
2794 D2 3541 A2 6134 B1
2795 E3 3542 A2 6142 B3
2796 D2 3543 A2 6144 C3
2797 D2 3544 A2 6147 C3
2798 D3 3560 A2 6148 B2
3100 A3 3561 A3 6149 A2
3104 C4 3562 A3 6150 A3
3105 B4 3701 F2 6151 A3
3106 B4 3702 G2 6153 A3
3107 B4 3703 G2 6156 A3
3109 B4 3704 G2 6503 B1

Layout Standby/Audio Panel (32”& Up) (Part 1 Bottom Side)

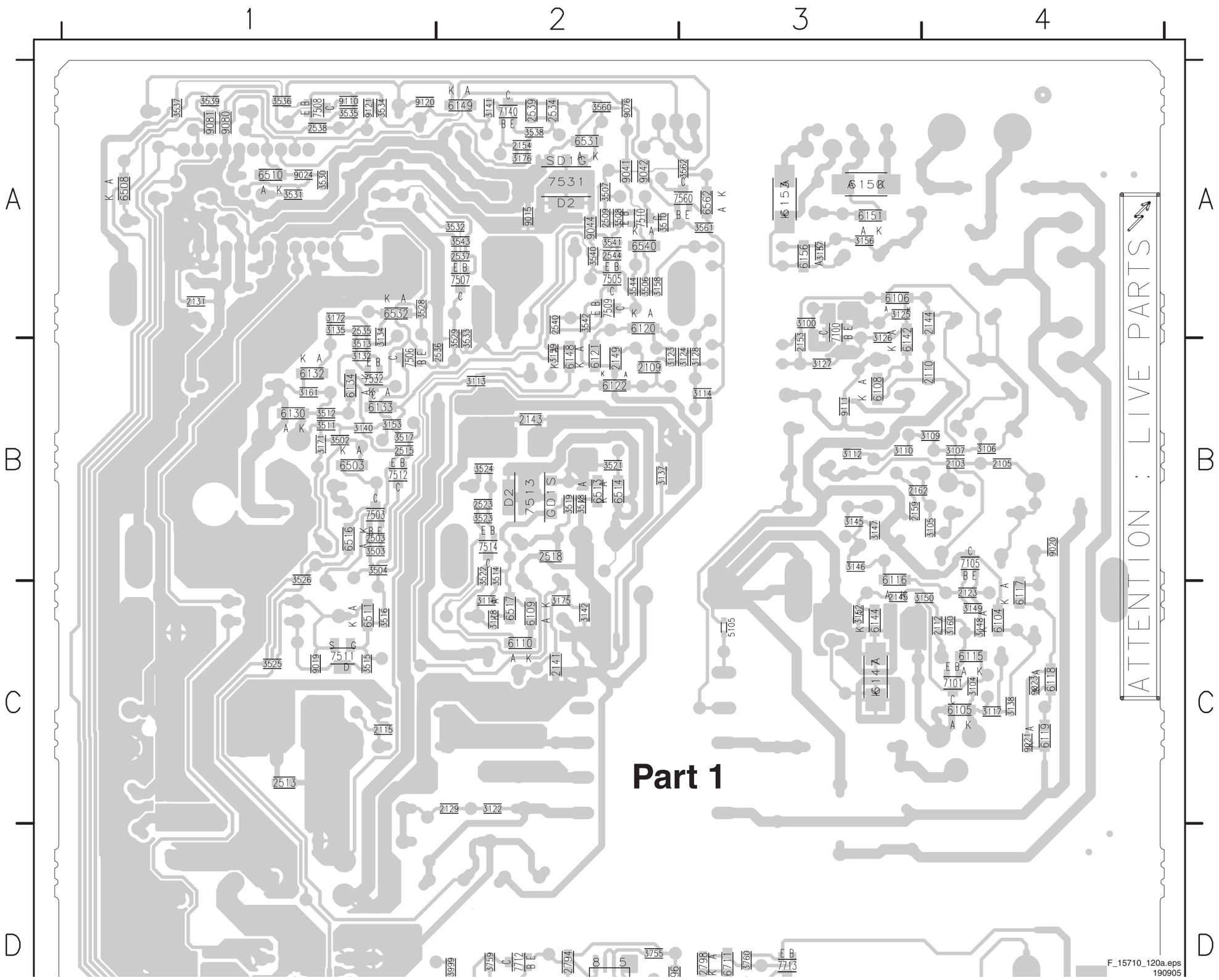

Layout Standby/Audio Panel (32"& Up) (Part 2 Bottom Side)

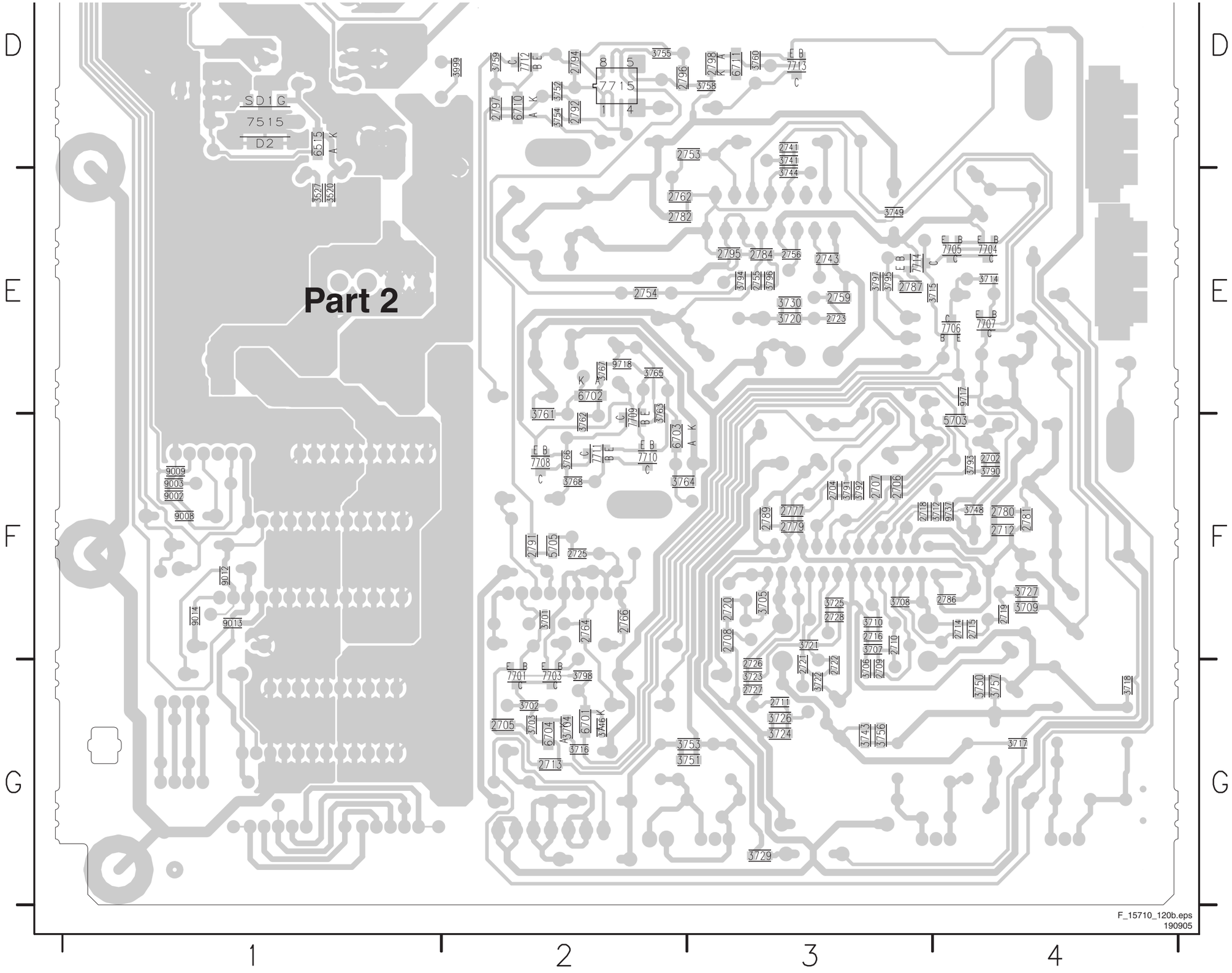

Personal Notes:

E_06532_013.eps
131004

8. Alignments

Index of this chapter:
8.1 General Alignment Conditions
8.2 Hardware Alignments
8.3 Software Alignments
8.4 Option Settings

8.1 General Alignment Conditions

8.1.1 Start Conditions

Perform all electrical adjustments under the following conditions:
- Power supply voltage: 120 V_{AC} / 60 Hz (± 10%).
- Connect the set to the AC Power via an isolation transformer with low internal resistance.
- Allow the set to warm up for approximately 15 minutes.
- Measure voltages and waveforms in relation to chassis ground (with the exception of the voltages on the primary side of the power supply).
  Caution: It is not allowed to use heatsinks as ground.
- Test probe: Ri > 10 Mohm, Ci < 20 pF.
- Use an isolated trimmer/screwdriver to perform alignments.

8.1.2 Initial Settings

Perform all electrical adjustments with the following initial settings (via the "Active Control" button on the RC):
1. To avoid the working of the lightsensor, set ACTIVE CONTROL to OFF.
2. Set SMART PICTURE to NATURAL/ECO.

8.1.3 Alignment Sequence

- First, set the correct options:
  – In SAM, select (SERVICE) OPTIONS -> OPT. NO,
  – Fill in the option settings according to the set sticker (see also paragraph "Option Settings"),
  – Select STORE OPTIONS and push OK on the remote control,
  – After storing, the set must be restarted!
- Warming up (>10 minutes).
- White point alignment.

8.2 Hardware Alignments

8.2.1 Backlight Voltage Alignment

Switch the set "on" and measure the voltage between pin 1 of connector 1304 and pin 1 of connector 1309 (ground). Align R3026 until this voltage is 24 V_{DC} +/- 0.1 V (for LPL displays).

Caution: This voltage must be aligned very precisely: when it is too high (> 27 V), it can destroy the inverters. When it is too low (< 23 V) the backlight will not start up.

Note: The 42" models have a double PSU, therefore an extra pot meter must be aligned: measure the voltage between pin 1 of connector 1303 and pin 1 of connector 1320 (ground). Align R3U26 until this voltage is 24 V_{DC} +/- 0.1 V.

8.3 Software Alignments

Put the set in SAM mode (see the "Service Modes, Error Codes and Fault Finding" section). The SAM menu will now appear on the screen. Select ALIGNMENTS and go to one of the sub menus. The alignments are explained below.

Notes:
- All changes must be stored manually.
- If an empty EAROM (permanent memory) is detected, all settings are set to pre-programmed default values.

8.3.1 General

For the next alignments, supply the following test signals via a video generator to the RF input: NTSC M/N TV-signal with a signal strength of at least 1 mV and a frequency of 61.25 MHz (channel 3).

Tuner AGC
Purpose: To keep the tuner output signal constant as the input signal amplitude varies.

For this chassis, no alignment is necessary, as the AGC alignment is done automatically (standard value: “32”).

8.3.2 White Point

- Set ACTIVE CONTROL to OFF.
- In the [MENU] -> PICTURE user menu, set:
  – DYNAMIC CONTRAST to OFF.
  – COLOUR ENHANCEMENT to OFF.
  – COLOUR to "0".
  – CONTRAST to "100".
  – BRIGHTNESS to "50".
- Go to the SAM and select ALIGNMENTS -> WHITE POINT.

Method 1 (with color analyzer):
- Use a 100% white screen as input signal and set the following values:
  – COLOR TEMPERATURE: "Tint to be aligned".
  – All WHITE POINT values to: "127".
  – RED BL OFFSET value to: "7".
  – GREEN BL OFFSET value to: "5".
- Measure with a calibrated (phosphor- independent) color analyzer in the centre of the screen. Consequently, the measurement needs to be done in a dark environment.
- Adjust, by means of decreasing the value of one or two white points, the correct x,y coordinates (see table "White D alignment values"). Tolerance: dx,dy: ± 0.004.
- Repeat this step for the other Color Temperatures that need to be aligned.
- When finished press STORE (in the SAM root menu) to store the aligned values to the NVM.
- Restore the initial picture settings after the alignments.

Table 8-1 White D alignment values

Color Temp. (degr. K)	Cool (11000)	Normal (9100)	Warm (6500)
x	0.276	0.285	0.313
y	0.282	0.293	0.329

When such equipment is not available, use “method 2”.

Method 2 (without color analyzer):

If you do not have a color analyzer, you can use the default values. This is the next best solution. The default values are average values coming from production (statistics).

1. Select a COLOUR TEMPERATURE (e.g. COOL, NORMAL, or WARM).
2. Set the RED, GREEN and BLUE default values according to the values in the "Tint settings" table.
3. When finished press STORE (in the SAM root menu) to store the aligned values to the NVM.
4. Restore the initial picture settings after the alignments.

Table 8-2 Tint

Colour Temp.	R	G	B
Cool	113	116	118
Normal	126	121	118
Warm	124	107	83

8.4 Option Settings

8.4.1 Introduction

The microprocessor communicates with a large number of I^2C ICs in the set. To ensure good communication and to make digital diagnosis possible, the microprocessor has to know which ICs to address. The presence / absence of these specific ICs (or functions) is made known via the option codes.

Notes:
- After changing the option(s), save them via “STORE”.
- The new option setting is only active after the TV is switched "off" and "on" again with the Mains switch (the EAROM is then read again).

8.4.2 Dealer Options

Table 8-3 Dealer options

Menu item	Subjects	Options	Description
Personal Options	Picture Mute	On	Picture mute active in case no picture detected
		Off	Noise in case of no picture detected
	Virgin Mode	On	TV starts up (once) with a language selection menu after the Mains switch is turned "on" for the first time (virgin mode)
		Off	TV does not start up (once) with a language selection menu after the Mains switch is turned "on" for the first time (virgin mode)
	2CS Korea (only for AP region)	On	
		Off	

8.4.3 (Service) Options

Select the sub menu's to set the initialization codes (options).

Table 8-4 Service options

Menu-item	Subjects	Options	Description
PIP/DS	Dual Screen	None / 1 tuner / 2 tuners	no DS / DS with one tuner / DS with two tuners
Data	EPG	On / Off	Feature present / not present
	RRT	Yes / No	Parental control is enabled via the Regional Rating Table (RRT)
Display	Screen	“Value”	Used screen size, type, and resolution (see table “Display code overview” in chapter “Service Modes” for the values)
	Scanning Backlight	On / Off	Feature present / not present
	Dimming Backlight	On / Off	Feature present / not present
Video Repro	Picture Processing	Spider / No Spider	Feature present / not present
	Combfilter	None / 2D / 3D	Only selectable with Columbus in set: No/without RAM/with RAM
	Ambient Light	None / Mono / Stereo	Inverter not present / two inverters mono / two inverters stereo
	MOP	On / Off	Feature present / not present (for sets with AmbiLight this is “on”)
Source Selection	HDMI 1	None / Audio / No Audio	No HDMI / HDMI with analog audio / HDMI without analog audio
	HDMI 2	None / Audio / No Audio	No HDMI / HDMI with analog audio / HDMI without analog audio
	USB version	None / 1.1 / 2.0 + CR	No USB / USB 1.1 in side I/O panel / USB 2.0 in cardreader panel
	IEEE1394	Yes / No	Connector present / not present
	Ethernet	Yes / No	Connector present / not present
	S/PDIF inputs	None / 1 conn. / 2 conn.	None / 1 connector present (in)/ 2 connectors present (in/out)
Audio Repro	Subwoofer Internal Present	Yes / No	Internal sub woofer present / not present
	Acoustic System (Cabinet design, used for setting dynamic audio parameters).	None	n.a.
		Entry ME5 15W	e.g. 32/37PF7320A
		(Soft) Wrap	n.a.
		Top	e.g. 42PF9830A
		Entry+	e.g. 32PF9630A, 42PF9730A
		Eco ME5 5W	e.g. 26PF5321D
		Eco ME5 15W	e.g. 32/37/42PF5321D
		Eco ME6 5W	e.g.
		Others	n.a.
Miscellaneous	Alternative Tuner	Philips / Alps	Tuner brand
	Tuner Type	TD1336S	Tuner type
Opt. no.	Group 1		xxxxx xxxxx xxxxx xxxxx (see set sticker)
	Group 2		xxxxx xxxxx xxxxx xxxxx (see set sticker)

8.4.4 Opt. No. (Option numbers)

Select this sub menu to set all options at once (expressed in two long strings of numbers).
An option number (or "option byte") represents a number of different options. When you change these numbers directly, you can set all options very quickly. All options are controlled via eight option numbers.
When the EAROM is replaced, all options will require resetting. To be certain that the factory settings are reproduced exactly, you must set both option number lines. You can find the correct option numbers on a sticker inside the TV set.

Example: The options sticker gives the following option numbers (depending on the model):
- 00016 00006 00033 14979
- 01035 00000 04768 00000

The first line (group 1) indicates hardware options 1 to 4, the second line (group 2) indicates software options 5 to 8.
Every 5-digit number represents 16 bits (so the maximum value will be 65536 if all options are set).
When all the correct options are set, the sum of the decimal values of each Option Byte (OB) will give the option number.

Table 8-5 Option code overview

Byte	Bit (dec. value)	Subject	Options	Settings (in decimal values)	Remarks
1	0 (1)	Video Repro	Picture Processing	0= No Spider, 1= Spider	Spider availability, influences, digital options.
	1 (2)				
	2 (4)				
	3 (8)		Comb Filter	0= None, 8= 2D Comb (Columbus without DRAM), 16= 3D Comb (Columbus with DRAM)	
	4 (16)				
	5 (32)		Ambient Light	0= None, 32=Ambi-light Stereo, 64= Ambi-light Mono	
	6 (64)				
	7 (128)				
	8 (256)		Dual Screen	0= None, 256= One Tuner DS, 512= Two Tuner DS	
	9 (512)				
	10 (1024)		MOP	0= Off, 1024= On	Matrix Output Processor (or EBILD)
	11 (2048)		JOP	0= Off, 2048= On	Jaguar Output Processor (or EBILD) Reserved for future use
	12 (4096)		POD	0= Off, 4096= On	
	13 (8192)		n.a.		
	14 (16384)		n.a.		
	15 (32768)		n.a.		
2	0 (1)	Sound Repro	Acoustic System (Cabinet)	0= None, 1= Entry_ ME5_5W, 2= Entry_ME5_15W, 3= (Soft)Wrap, 4= Top, 5= Entry+, 6= Eco ME5 5W, 7= Eco ME5 15W, 8= ECo ME6 9= Top-A 2K6, 10= Step Top -B Open 2K6, 11= ME6 2K6, 12= 51 WMAG, 13= 51 PHIL, 14= 60 PHIL, 15= MG Eco Slim	Cabinet design, used for setting dynamic audio parameters.
	1 (2)				
	2 (4)				
	3 (8)				
	4 (16)		Aux Headphone Sound	0= Off, 16= On	Dual AC3 sound in Aux available.
	5 (32)		n.a.		
	6 (64)		n.a.		
	7 (128)		n.a.		
	8 (256)		n.a.		
	9 (512)		Sub woofer Internal	0= Not Present, 512= Present	
	10 (1024)		Centre Mode Support	0= Not Supported, 1024= Supported	
	11 (2048)		n.a.		
	12 (4096)		n.a.		
	13 (8192)		n.a.		
	14 (16384)		n.a.		
	15 (32768)		n.a.		
3	0 (1)	Source Select	HDMI1	0= None, 1= With analog audio, 2= Without analog audio	
	1 (2)				
	2 (4)		HDMI2	0= None, 4= With analog audio, 8= Without analog audio	
	3 (8)				
	4 (16)		n.a.		
	5 (32)		USB Version	0= None, 32= USB 1.1, 64= USB 2.0 + Card reader	USB support.
	6 (64)				
	7 (128)		IEEE1394	0= Not Present, 128= Present	
	8 (256)		Ethernet	0= LAN not present, 256= LAN present	
	9 (512)		RRT	0= Off, 512= On	Regional Rating Table (RRT)
	10 (1024)		S/PDIF Inputs	0= None, 1024= 1 Connector, 2048= 2 Connectors	
	11 (2048)				
	12 (4096)		LCOS I/O	0= Not Present, 4096= Present	
	13 (8192)		n.a.		
	14 (16384)		n.a.		
	15 (32768)		n.a.		
4	0 (1)	Region	Region	0= EU, 1= AP-P, 2= AP-N, 3= US, 4= Latam	
	1 (2)				
	2 (4)				
	3 (8)	Interconnect	China IF	0= Off, 8= On	
	4 (16)		Alternative Tuner	0= Philips, 16= Alps	Tuner make.
	5 (32)		Tuner Type	0= TD1336s (B-Chassis US), 32= TD1331(J-Chassis US), 64= UV1318 (Analogue EU), 96= TD1316 (Hybrid EU)	Tuner type (B-chassis US is e.g "BP2.3U").
	6 (64)				
	7 (128)	Source Select	AGC Amp.	0= NEC IF Amp, 128= Sanyo IF Amp.	Pos.: 7T13 of B02B schematic
	8 (256)		AV1	0= CVBS/RGB, 256= CVBS/YC/LR, 512= CVBS/YC/YPbPr/HV/LR	Input type.
	9 (512)				
	10 (1024)		AV2	0= CVBS/YC/RGB/P50, 1024= CVBS/YC/LR	Input type.
	11 (2048)				
	12 (4096)		AV3	0= Not Available, 4096= CVBS, 8192= YPbPr	Input type.
	13 (8192)				
	14 (16384)		AV4	0= Not Available, 16384= YPbPr	Input type.
	15 (32768)				

Byte	Bit (dec. value)	Subject	Options	Settings (in decimal values)	Remarks
5	0 (1)	Display	Screen	See table “Display code overview” in chapter “Service Modes” for the values.	Screen size, type, and resolution.
	1 (2)				
	2 (4)				
	3 (8)				
	4 (16)				
	5 (32)				
	6 (64)				
	7 (128)				
	8 (256)		n.a.		
	9 (512)		PDP contrast reduction	0= Off, 512= On	To reduce the contrast of the PDP for a still picture after a certain time
	10 (1024)		Dimming Backlight	0= Off, 1024= On	
	11 (2048)		Scanning Backlight	0= Off, 2048= On	Option for Scanning Backlight, which is only applicable for Clear LCD
	12 (4096)		n.a.		
	13 (8192)		n.a.		
	14 (16384)		n.a.		
	15 (32768)		n.a.		
6	0 (1)	Miscellaneous	n.a.		Reserved for future use
	1 (2)		n.a.		
	2 (4)		n.a.		Reserved for future use
	3 (8)		n.a.		
	4 (16)		n.a.		
	5 (32)		n.a.		
	6 (64)		Proximity Sensor	0= Off, 64= On	
	7 (128)		n.a.		
	8 (256)		n.a.		
	9 (512)		n.a.		
	10 (1024)		n.a.		
	11 (2048)		n.a.		
	12 (4096)		n.a.		
	13 (8192)		n.a.		
	14 (16384)		n.a.		
	15 (32768)		n.a.		
7	0 (1)	Personal	Self Learning TV	0= Off, 1= On	Reserved for future use
	1 (2)		Auto Store Mode	0= None, 2= PDC/VPS, 4= TXT Page, 6= PDC/VPS/TXT Page	Fixed to: "None" in the AP-N and US versions.
	2 (4)				
	3 (8)		2CS Korea	0= Off, 8= On, 16= Auto	
	4 (16)				
	5 (32)		Picture Mute	0= Off, 32= On	
	6 (64)		n.a.		
	7 (128)		Virgin Mode	0= Off, 128= On	
	8 (256)		Hotel Mode	0= Off, 256= On	
	9 (512)		Content Browser	0= Not Present, 512= Present	
	10 (1024)		Connected Planet	0= Off, 1024= Full Connected Planet + logo support	
	11 (2048)				
	12 (4096)		ATSC/DVB	0= DVB, 4096= ATSC	
	13 (8192)				
	14 (16384)		EPG	0= Off, 16384= On	Applicable to Europe
	15 (32768)		Gemstar	0= Off, 32768= On	Applicable to NAFTA
8	0 (1)	n.a.	n.a.		
	1 (2)	n.a.	n.a.		
	2 (4)	n.a.	n.a.		
	3 (8)	n.a.	n.a.		
	4 (16)	n.a.	n.a.		
	5 (32)	n.a.	n.a.		
	6 (64)	n.a.	n.a.		
	7 (128)	n.a.	n.a.		
	8 (256)	n.a.	n.a.		
	9 (512)	n.a.	n.a.		
	10 (1024)	n.a.	n.a.		
	11 (2048)	n.a.	n.a.		
	12 (4096)	n.a.	n.a.		
	13 (8192)	n.a.	n.a.		
	14 (16384)	n.a.	n.a.		
	15 (32768)	n.a.	n.a.		

Table 8-6 Option code table

Model Number	Panel type	Option Group 1	Option Group 2
26PF5321D/37	LPL-SL01	00016 00006 00033 14979	01045 00000 04768 00000
	LPL-SL06	00016 00006 00033 14979	01069 00000 04768 00000
26HF5334D/27	LPL-SL01	00016 00006 00033 14979	01045 00000 05024 00000
	LPL-SL06	00016 00006 00033 14979	01069 00000 05024 00000
32PF5321D/37	LPL-SL02	00016 00007 00033 14979	01035 00000 04768 00000
	LPL-SL06	00016 00007 00033 14979	01070 00000 04768 00000
	AUO	00016 00007 00033 14979	01074 00000 04768 00000
32PF7321D/37	LPL-SL02	00016 00008 00033 14979	01035 00000 04768 00000
	LPL-SL06	00016 00008 00033 14979	01070 00000 04768 00000
	AUO	00016 00008 00033 14979	01074 00000 04768 00000
37PF7321D/37	LPL-SL02	00016 00008 00033 14979	01028 00000 04768 00000
	LPL-SL04	00016 00008 00033 14979	01077 00000 04768 00000
	AUO	00016 00008 00033 14979	01075 00000 04768 00000
42PF7421D/37	LPL-A6	00016 00008 00033 14979	01029 00000 04768 00000
	LPL-SLB1	00016 00008 00033 14979	01071 00000 04768 00000

9. Circuit Descriptions, Abbreviation List, and IC Data Sheets

Index of this chapter:

9.1 Introduction
9.2 Abbreviation List
9.3 IC Data Sheets

Notes:
- Only new circuits (circuits that are not published recently) are described. For other descriptions see the BL2.xU manual (3122 785 15570).
- Figures can deviate slightly from the actual situation, due to different set executions.
- For a good understanding of the following circuit descriptions, please use the wiring, block (chapter 6) and circuit diagrams (chapter 7). Where necessary, you will find a separate drawing for clarification.

9.1 Introduction

This chassis is specifically developed for ATSC reception without CableCARD™, and is in fact derived from the BL2.xU/BP2.xU chassis. The key components are:
- MPIF (PNX3000).
- AVIP/COLUMBUS (PNX2015).
- VIPER 2 (PNX8550).

Some delta's with respect to the BL2.xU/BP2.xU chassis:
- No POD, so only unscrambled ATSC channels.
- Audio Amplifier is integrated on the SSB.
- I/O's are integrated on the SSB.
- One HDMI connector (i.o. two).
- One USB1.1 connector (i.o. USB2.0).
- No card reader.
- No MOP (EPLD), due to the fact that these sets do not come with AmbiLight.

9.1.1 Features

The main features for this chassis are:
- The move from the analog world to the digital world. W.o.w. from signal processing via "hardware circuits" to signal processing via "software algorithms". This means: no software = no picture and sound!
- Fit for both analog and digital signal processing, this by converting analog signals into digital transport streams and allowing seamless zapping between all possible signal sources. This makes the chassis applicable for e.g. receiving ATSC in an integrated product form.
- The internal digital processing allows new "Multi-Media" applications such as Content Browser, Memory Card Slot, Local Area Network support and all kinds of streaming applications.
- The chassis can be upgraded in the future with internal functionality such as Personal Video Recording, DVD/RW.

9.1.2 Chassis Block Diagram

Description below refers to the block diagrams in chapter 6 "Block Diagrams, Test Point Overview, and Waveforms".

Analog Reception
The TV receives multimedia information by tuning the Hybrid tuner (for analog and digital reception) to one of many 6 MHz input channels available via a cable connection. When the input channel is an analog channel, the signal is processed via the NTSC decoder and the VBI data decoder of the MPIF.

Digital Reception
The TV receives multimedia information by tuning to one of many 6 MHz input channels available via a cable connection. When the input channel is a digital channel, it is processed via the QAM demodulator and then passed to the multi-media processor (VIPER), which handles the synchronization and display of audio-visual material.

Signal Processing
The AVIP together with the MPIF device is used to perform the input decoding of a single stream of analog audio and video broadcast signals. In addition, the AVIP is used for decoding and presentation of audio output streams. The main data connection between MPIF and AVIP is done via an I^2D bus. The AVIP converts the incoming video data to ITU-656 format for communication to the VIPER IC.
The audio data is transferred between the AVIP and VIPER using I^2S.
The AVIP IC is controlled by the VIPER via the I^2C bus.
The key part in the system, the VIPER, performs almost all key features, like video quality enhancement, motion compensation, picture-in-picture processing, and others. It is a completely digital IC with a TriMedia DSP (Digital Signal Processor) core and a MIPS microcontroller core. The DSP and some additional cores are used to do the video feature processing and some auxiliary sound feature processing. The MIPS microcontroller core is used for all internal and external controlling tasks including a system wide I^2C bus.
The VIPER provides a primary digital (YUV or RGB) output to the LVDS transmitter.

SSB Cell Layout

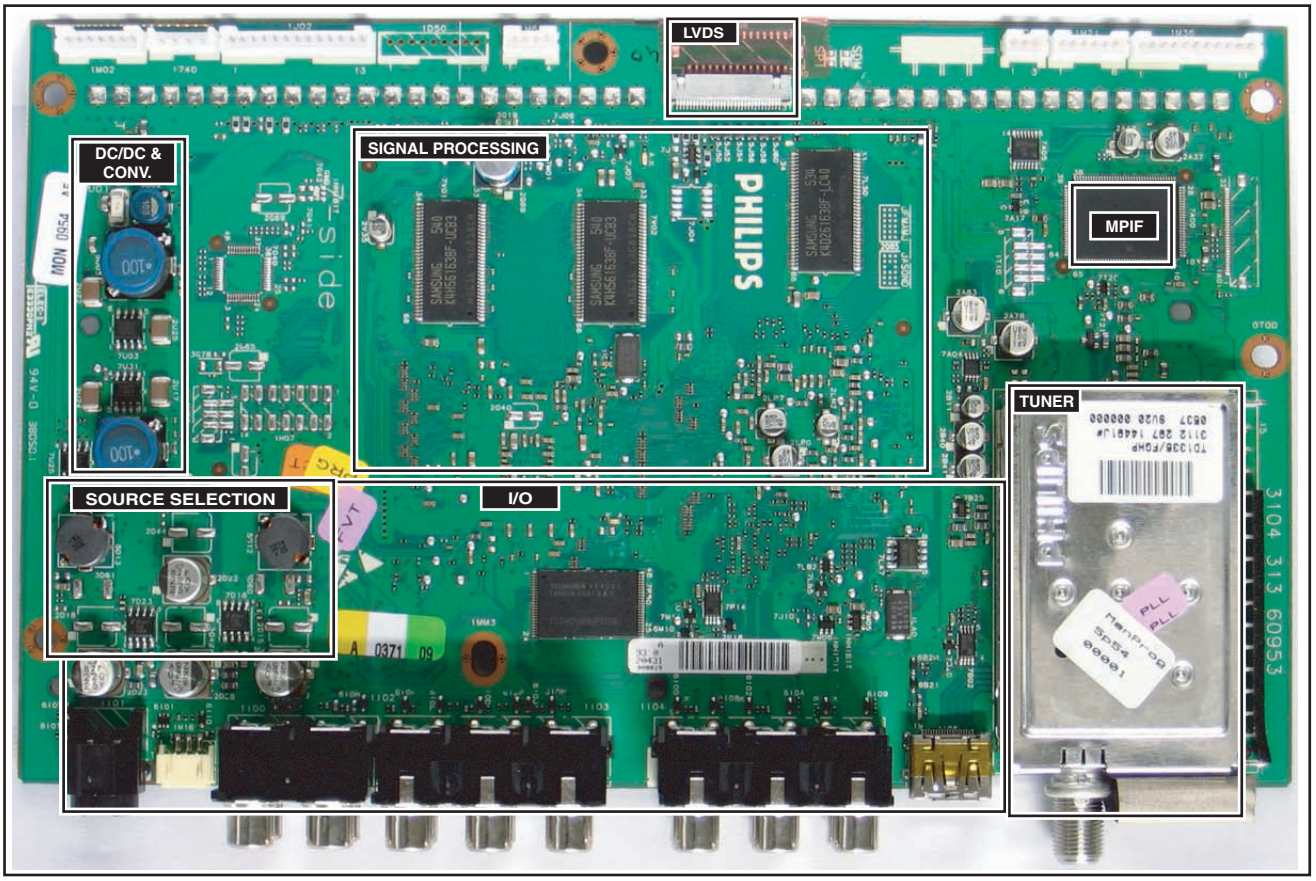

Figure 9-1 SSB top view

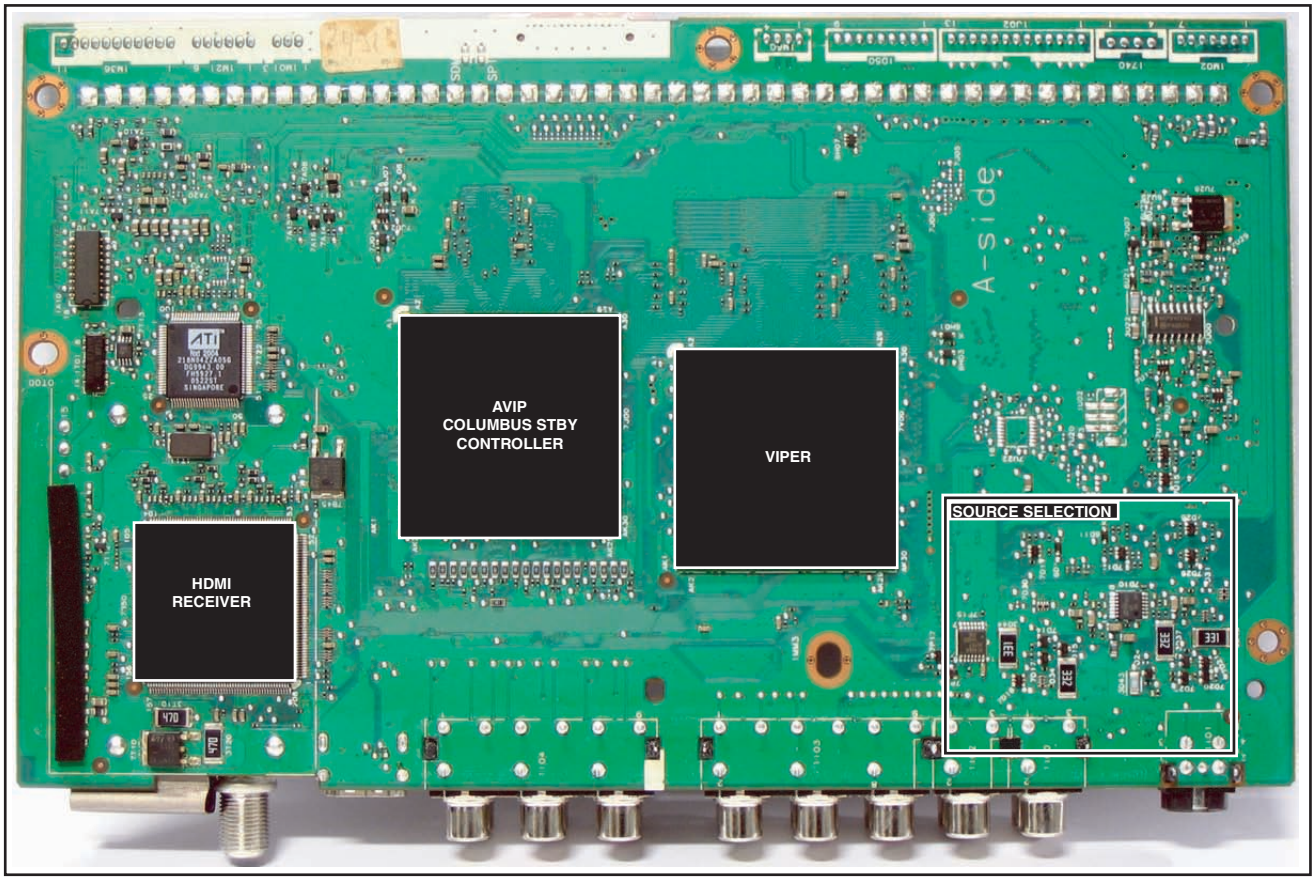

Figure 9-2 SSB bottom view

9.2 Abbreviation List

0/6/12	SCART switch control signal on A/V board. 0 = loop through (AUX to TV), 6 = play 16:9 format, 12 = play 4:3 format
2DNR	Spatial (2D) Noise Reduction
3DNR	Temporal (3D) Noise Reduction
AARA	Automatic Aspect Ratio Adaptation: algorithm that adapts aspect ratio to remove horizontal black bars; keeps the original aspect ratio
ACI	Automatic Channel Installation: algorithm that installs TV channels directly from a cable network by means of a predefined TXT page
ADC	Analogue to Digital Converter
AFC	Automatic Frequency Control: control signal used to tune to the correct frequency
AGC	Automatic Gain Control: algorithm that controls the video input of the feature box
AM	Amplitude Modulation
ANR	Automatic Noise Reduction: one of the algorithms of Auto TV
AP	Asia Pacific
AR	Aspect Ratio: 4 by 3 or 16 by 9
ASF	Auto Screen Fit: algorithm that adapts aspect ratio to remove horizontal black bars without discarding video information
ATSC	Advanced Television Systems Committee, the digital TV standard in the USA
ATV	See Auto TV
Auto TV	A hardware and software control system that measures picture content, and adapts image parameters in a dynamic way
AV	External Audio Video
AVIP	Audio Video Input Processor
B/G	Monochrome TV system. Sound carrier distance is 5.5 MHz
BTSC	Broadcast Television Standard Committee. Multiplex FM stereo sound system, originating from the USA and used e.g. in LATAM and AP-NTSC countries
B-TXT	Blue TeleteXT
C	Centre channel (audio)
CA(M)	Conditional Access (Module)
CEC	Consumer Electronics Control bus: remote control bus on HDMI connections
CIS	Card Information Structure: Protocol which identifies the card in a POD module
CL	Constant Level: audio output to connect with an external amplifier
COLUMBUS	COlor LUMinance Baseband Universal Sub-system
ComPair	Computer aided rePair
CP	Connected Planet / Copy Protection
CSM	Customer Service Mode
CSS	Content Scrambling System; An encryption method for MPEG-2 video on DVDs. The algorithm and keys required to decode the disc are stored on the DVD-player
CTI	Color Transient Improvement: manipulates steepness of chroma transients
CVBS	Composite Video Blanking and Synchronization
DAC	Digital to Analogue Converter
DBE	Dynamic Bass Enhancement: extra low frequency amplification
DDC	See "E-DDC"
D/K	Monochrome TV system. Sound carrier distance is 6.5 MHz
DFU	Directions For Use: owner's manual
DMR	Digital Media Reader: card reader
DNR	Digital Noise Reduction: noise reduction feature of the set
DRAM	Dynamic RAM
DRM	Digital Rights Management
DSP	Digital Signal Processing
DST	Dealer Service Tool: special remote control designed for service technicians
DTCP	Digital Transmission Content Protection; A protocol for protecting digital audio/video content that is traversing a high speed serial bus, such as IEEE-1394
DVD	Digital Versatile Disc
DVI(-d)	Digital Visual Interface (d= digital only)
EAS	Emergency Alert Signalling; A cable TV standard (SCTE18) to signal emergency information to digital terminal devices
ECM	Entitlement Control Message
E-DDC	Enhanced Display Data Channel (VESA standard for communication channel and display). Using E-DDC, the video source can read the EDID information form the display.
EDID	Extended Display Identification Data (VESA standard)
EEPROM	Electrically Erasable and Programmable Read Only Memory
EMI	Electro Magnetic Interference
EMM	Entitlement Management Message
EPLD	Erasable Programmable Logic Device
EU	Europe
EXT	EXTernal (source), entering the set by SCART or by cinches (jacks)
FAT	Forward Application Transport channel
FBL	Fast BLanking: DC signal accompanying RGB signals
FDC	
FDS	Full Dual Screen (same as FDW)
FDW	Full Dual Window (same as FDS)
FLASH	FLASH memory
FM	Field Memory or Frequency Modulation
FTV	Flat TeleVision
Gb/s	Giga bits per second
G-TXT	Green TeleteXT
H	H_sync to the module
HD	High Definition
HDD	Hard Disk Drive
HDCP	High-bandwidth Digital Content Protection: A "key" encoded into the HDMI/DVI signal that prevents video data piracy. If a source is HDCP coded and connected via HDMI/DVI without the proper HDCP decoding, the picture is put into a "snow vision" mode or changed to a low resolution. For normal content distribution the source and the display device must be enabled for HDCP "software key" decoding.
HDMI	High Definition Multimedia Interface
HP	HeadPhone

I	Monochrome TV system. Sound carrier distance is 6.0 MHz
I^2C	Integrated IC bus
I^2D	Integrated IC Data bus
I^2S	Integrated IC Sound bus
IB	In Band channel
IF	Intermediate Frequency
Interlaced	Scan mode where two fields are used to form one frame. Each field contains half the number of the total amount of lines. The fields are written in "pairs", causing line flicker.
IR	Infra Red
IRQ	Interrupt Request
ITU-656	The ITU Radio communication Sector (ITU-R) is a standards body subcommittee of the International Telecommunication Union relating to radio communication. ITU-656 (a.k.a. SDI), is a digitized video format used for broadcast grade video. Uncompressed digital component or digital composite signals can be used. The SDI signal is self-synchronizing, uses 8 bit or 10 bit data words, and has a maximum data rate of 270 Mbit/s, with a minimum bandwidth of 135 MHz.
ITV	Institutional TeleVision; TV sets for hotels, hospitals etc.
JOP	Jaguar Output Processor
LS	Last Status; The settings last chosen by the customer and read and stored in RAM or in the NVM. They are called at start-up of the set to configure it according to the customer's preferences
LATAM	Latin America
LCD	Liquid Crystal Display
LED	Light Emitting Diode
L/L'	Monochrome TV system. Sound carrier distance is 6.5 MHz. L' is Band I, L is all bands except for Band I
LORE	LOcal REgression approximation noise reduction
LPL	LG.Philips LCD (supplier)
LS	Loudspeaker
LVDS	Low Voltage Differential Signalling
Mbps	Mega bits per second
M/N	Monochrome TV system. Sound carrier distance is 4.5 MHz
MOP	Matrix Output Processor
MOSFET	Metal Oxide Silicon Field Effect Transistor, switching device
MPEG	Motion Pictures Experts Group
MPIF	Multi Platform InterFace
MUTE	MUTE Line
NC	Not Connected
NICAM	Near Instantaneous Compounded Audio Multiplexing. This is a digital sound system, mainly used in Europe.
NTC	Negative Temperature Coefficient, non-linear resistor
NTSC	National Television Standard Committee. Color system mainly used in North America and Japan. Color carrier NTSC M/N= 3.579545 MHz, NTSC 4.43= 4.433619 MHz (this is a VCR norm, it is not transmitted off-air)
NVM	Non-Volatile Memory: IC containing TV related data such as alignments
O/C	Open Circuit
OOB	Out Of Band channel
OSD	On Screen Display
OTC	On screen display Teletext and Control; also called Artistic (SAA5800)
P50	Project 50: communication protocol between TV and peripherals
PAL	Phase Alternating Line. Color system mainly used in West Europe (color carrier= 4.433619 MHz) and South America (color carrier PAL M= 3.575612 MHz and PAL N= 3.582056 MHz)
PCB	Printed Circuit Board (same as "PWB")
PCM	Pulse Code Modulation
PCMCIA	Personal Computer Memory Card International Association
PDP	Plasma Display Panel
PFC	Power Factor Corrector (or Pre-conditioner)
PIP	Picture In Picture
PLL	Phase Locked Loop. Used for e.g. FST tuning systems. The customer can give directly the desired frequency
POD	Point Of Deployment: A removable CAM module, implementing the CA system for a host (e.g. a TV-set)
POR	Power On Reset, signal to reset the uP
Progressive Scan	Scan mode where all scan lines are displayed in one frame at the same time, creating a double vertical resolution.
PSIP	Program and System Information Protocol: A standard for (broadcast) digital television. PSIP consists of channel mapping data, program guide data, information about closed captions and content advisory ratings, and other data related to the current and future programs.
PTC	Positive Temperature Coefficient, non-linear resistor
PWB	Printed Wiring Board (same as "PCB")
PWM	Pulse Width Modulation
QAM	Quadrature Amplitude Modulation; modulation method
QTNR	Quality Temporal Noise Reduction
QVCP	Quality Video Composition Processor
RAM	Random Access Memory
RGB	Red, Green, and Blue. The primary color signals for TV. By mixing levels of R, G, and B, all colors (Y/C) are reproduced.
RC	Remote Control
RC5 / RC6	Signal protocol from the remote control receiver
RESET	RESET signal
ROM	Read Only Memory
R-TXT	Red TeleteXT
RRT	This is one of the PSIP tables received via an ATSC compliant transport stream. In case of the OpenCable compliant transport stream, RRT is received via the out of band SI
SAM	Service Alignment Mode
S/C	Short Circuit
SCART	Syndicat des Constructeurs d'Appareils Radiorecepteurs et Televisieurs
SCL	Serial Clock I^2C
SCL-F	CLock Signal on Fast I^2C bus
SD	Standard Definition
SDA	Serial Data I^2C
SDA-F	DAta Signal on Fast I^2C bus
SDI	Serial Digital Interface, see “ITU-656”
SDRAM	Synchronous DRAM

SECAM	Séquence Couleur Avec Memoire. Color system mainly used in France and East Europe. Color carriers= 4.406250 MHz and 4.250000 MHz
SIF	Sound Intermediate Frequency
SMPS	Switched Mode Power Supply
SOG	Sync On Green
SOPS	Self Oscillating Power Supply
S/PDIF	Sony Philips Digital InterFace
SRAM	Static RAM
SSB	Small Signal Board
STBY	STandBY
SOG	Sync On Green
SVGA	800x600 (4:3)
SVHS	Super Video Home System
SW	Software
SWAN	Spatial temporal Weighted Averaging Noise reduction
SXGA	1280x1024
TFT	Thin Film Transistor
THD	Total Harmonic Distortion
TMDS	Transmission Minimized Differential Signalling
TXT	TeleteXT
TXT-DW	Dual Window with TeleteXT
uP	Microprocessor
UXGA	1600x1200 (4:3)
V	V-sync to the module
VCR	Video Cassette Recorder
VESA	Video Electronics Standards Association
VGA	640x480 (4:3)
VL	Variable Level out: processed audio output toward external amplifier
VSB	Vestigial Side Band; modulation method
WYSIWYR	What You See Is What You Record: record selection that follows main picture and sound
WXGA	1280x768 (15:9)
XTAL	Quartz crystal
XGA	1024x768 (4:3)
Y	Luminance signal
Y/C	Luminance (Y) and Chrominance (C) signal
YPbPr	Component video. Luminance and scaled color difference signals (B-Y and R-Y)
YUV	Component video

9.3 IC Data Sheets

This section shows the internal block diagrams and pin configurations of ICs that are drawn as "black boxes" in the electrical diagrams (with the exception of "memory" and "logic" ICs).

9.3.1 Diagram A3, AVS1ACP08 (IC 7H05)

Block Diagram

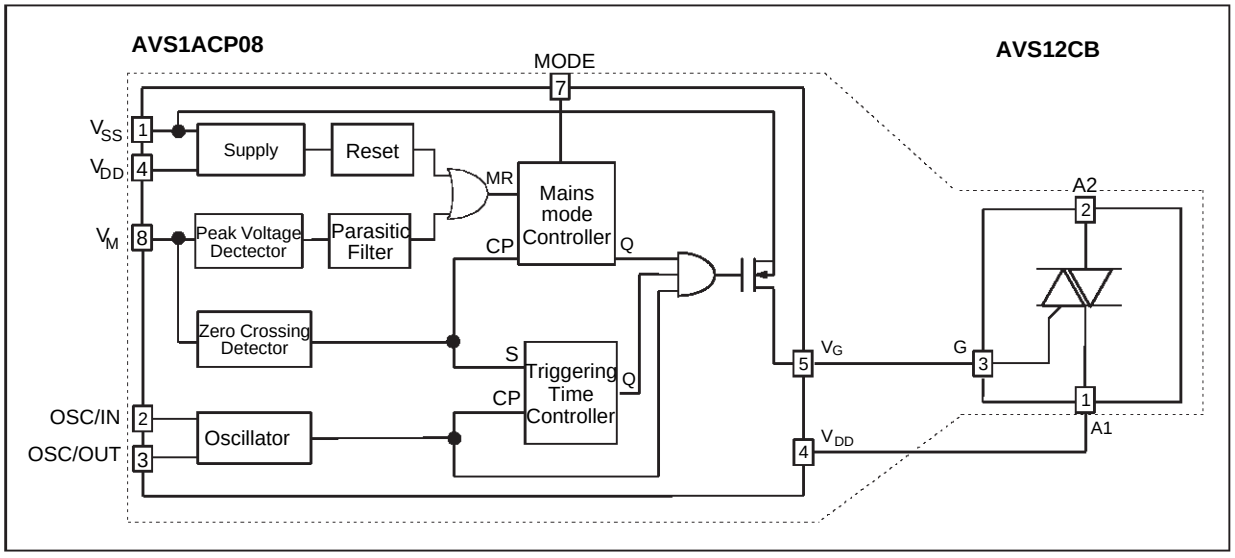

Pin Configuration

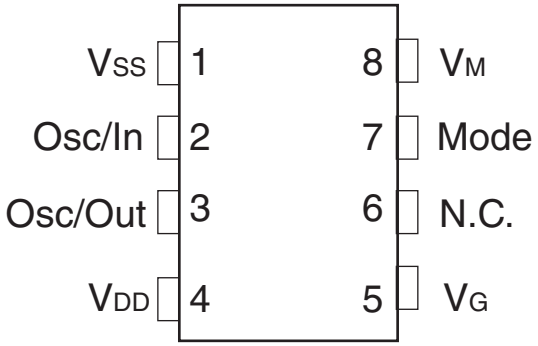

G_16290_081.eps
020206

Figure 9-3 Internal block diagram and pin configuration

9.3.2 Diagram A4, MC34067P (IC 7U01)

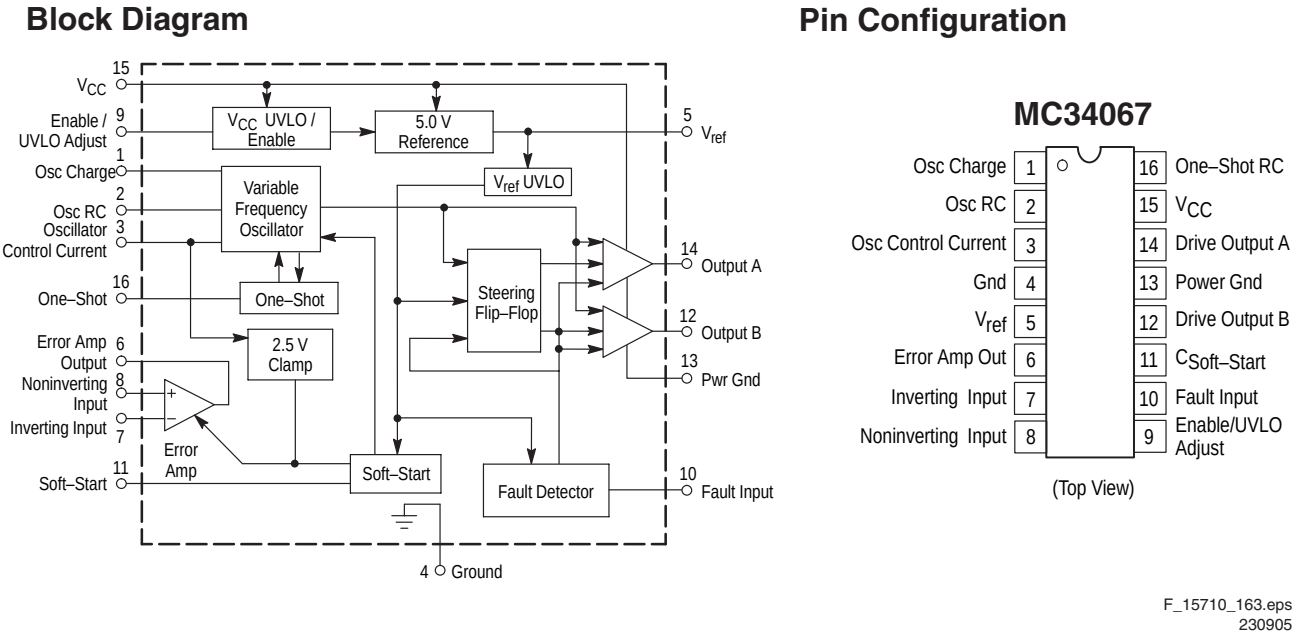

F_15710_163.eps
230905

Figure 9-4 Internal block diagram and pin configuration

9.3.3 Diagram B1A, NCP5422ADR2G (IC 7U00)

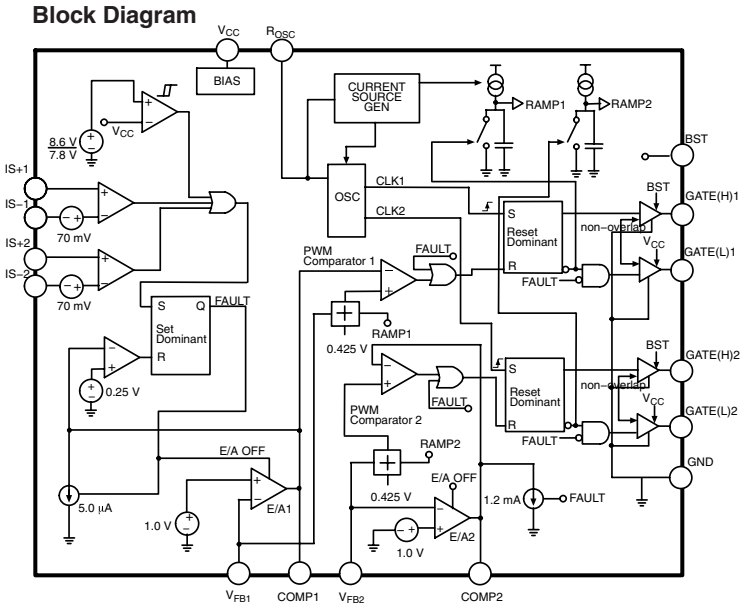

Pin Configuration

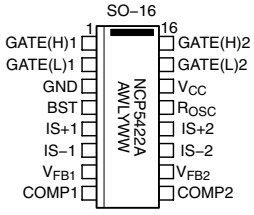

A = Assembly Location
WL = Wafer Lot
Y = Year
WW = Work Week

F_15400_129.eps
240505

Figure 9-5 Internal block diagram and pin configuration

9.3.4 Diagram B2A, NXT2004 (IC 7T22)

Block Diagram

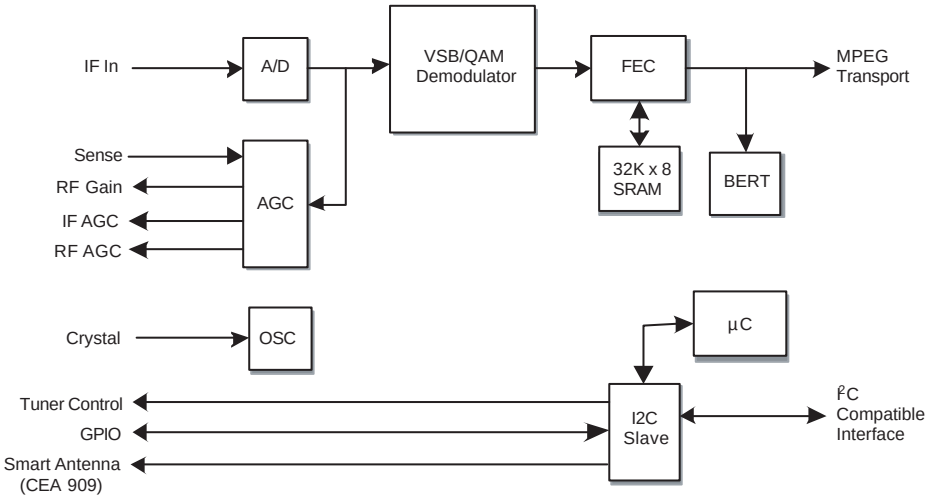

Pin Configuration

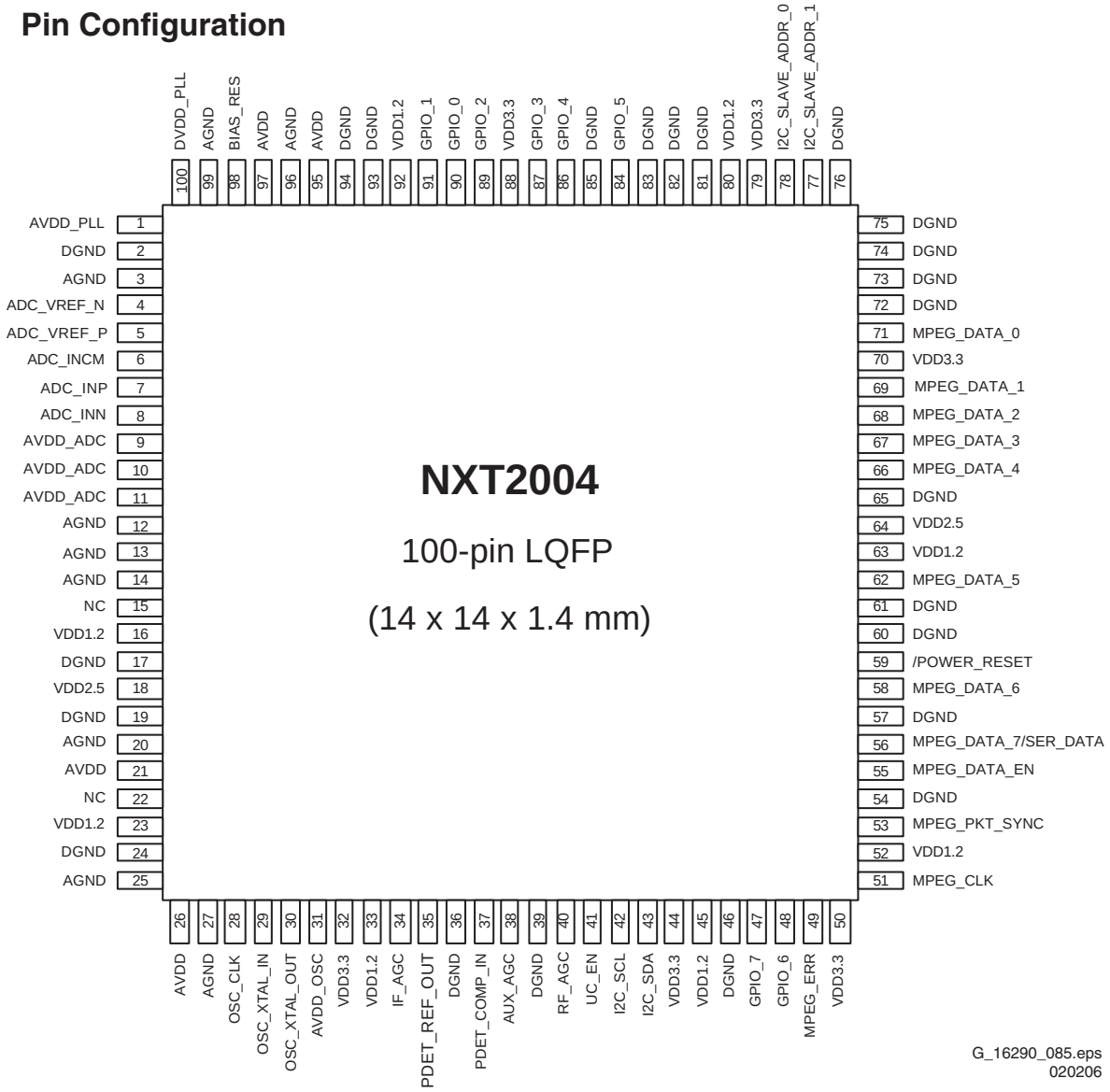

Figure 9-6 Internal block diagram and pin configuration

9.3.5 Diagram B3A/B/C/D, PNX 3000H (IC 7A00)

Block Diagram

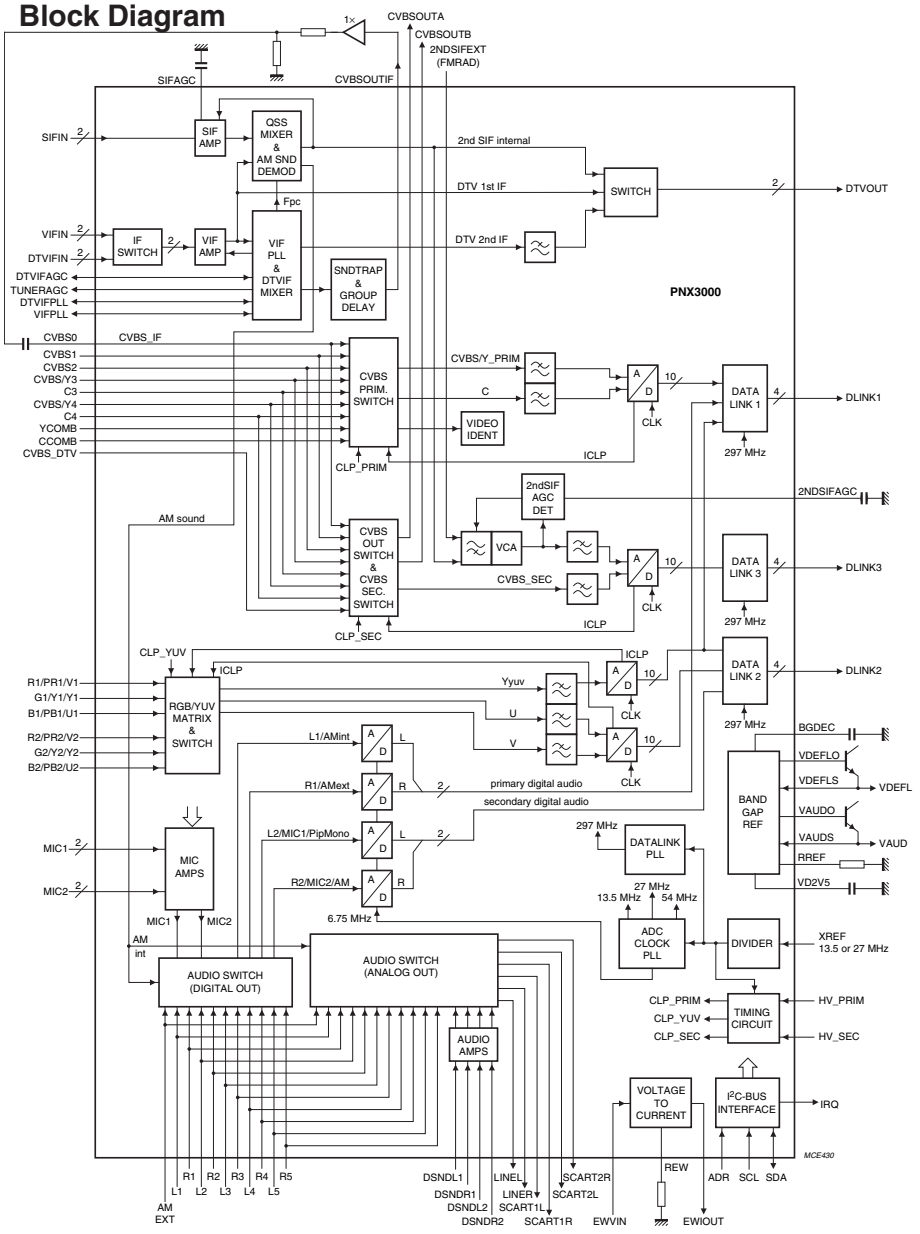

Pin Configuration

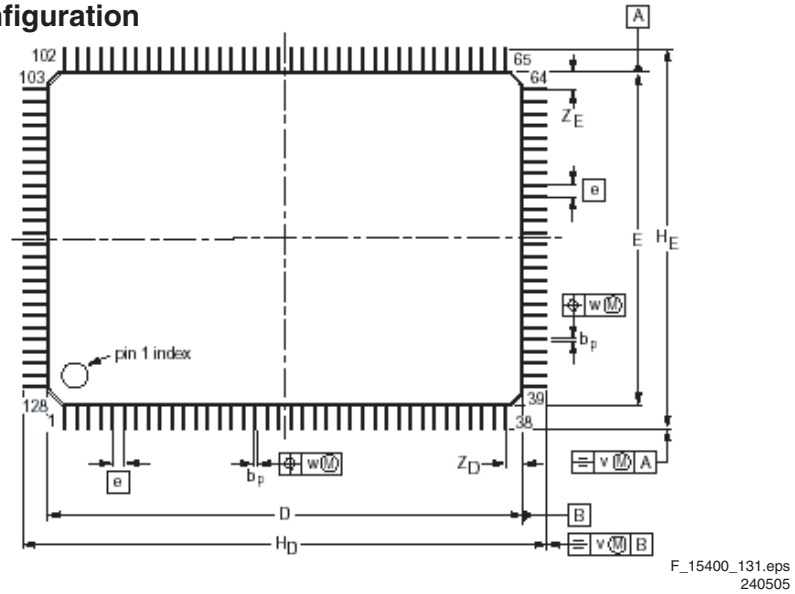

F_15400_131.eps
240505

Figure 9-7 Internal block diagram and pin configuration

9.3.6 Diagram B4A/B/C/D/E/F, PNX 2015 (IC 7J00)

Block Diagram

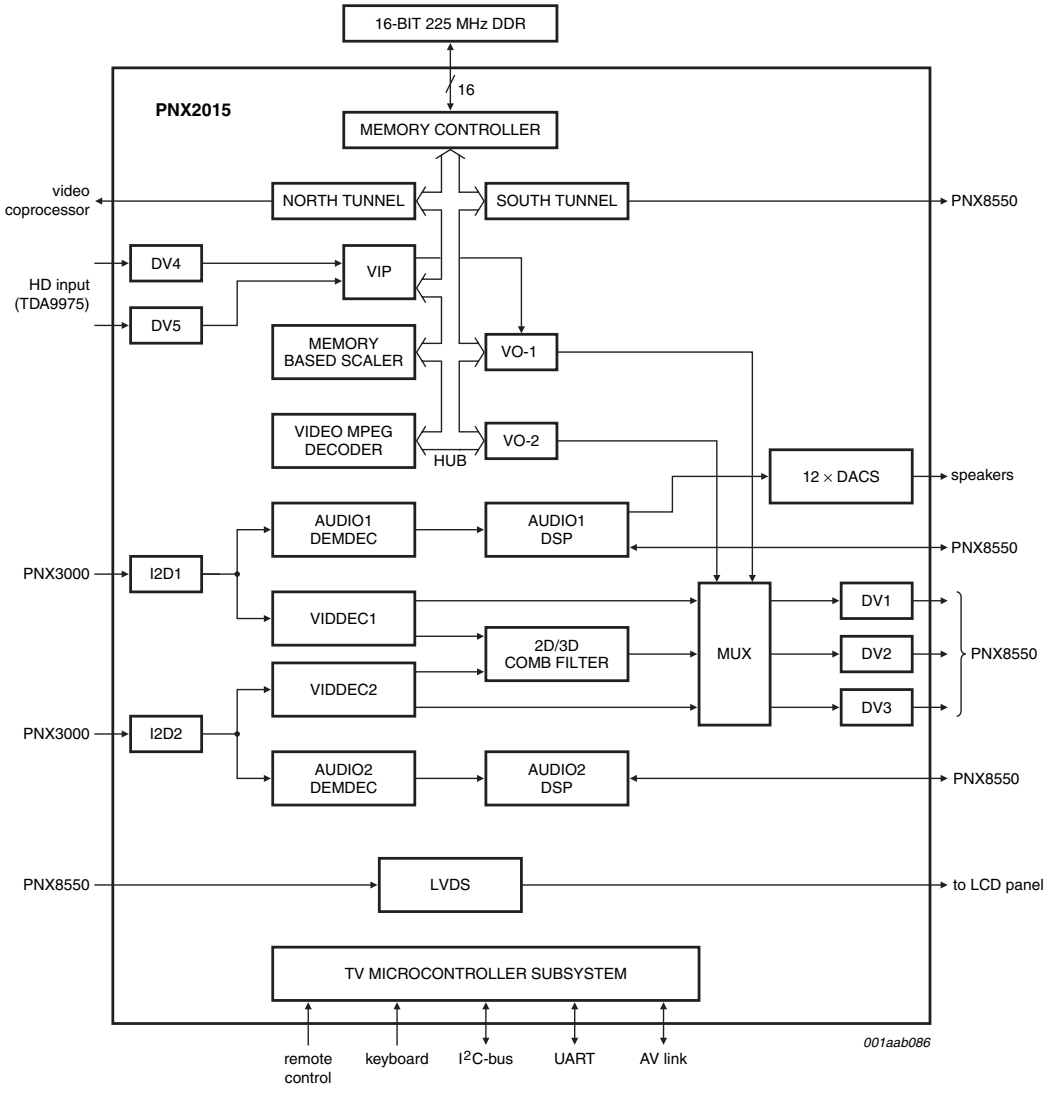

Pin Configuration

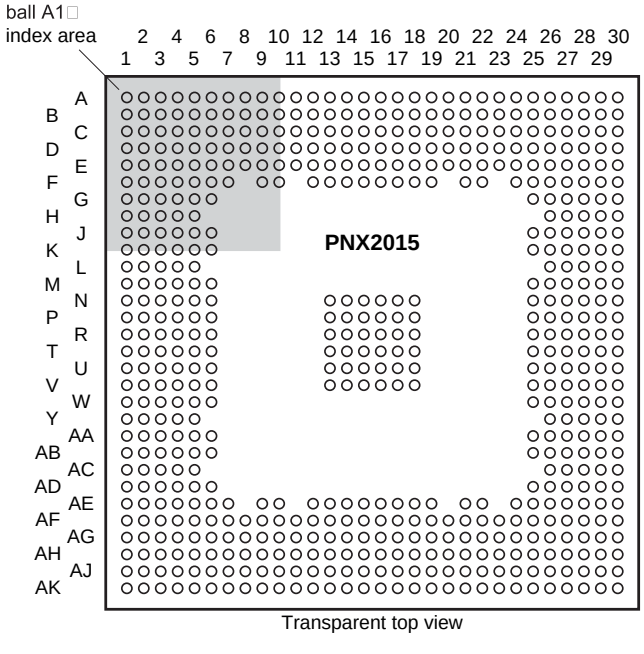

F_15400_132.eps
240505

Figure 9-8 Internal block diagram and pin configuration

9.3.7 Diagram B5C, VIPER (IC 7V00)

Block Diagram

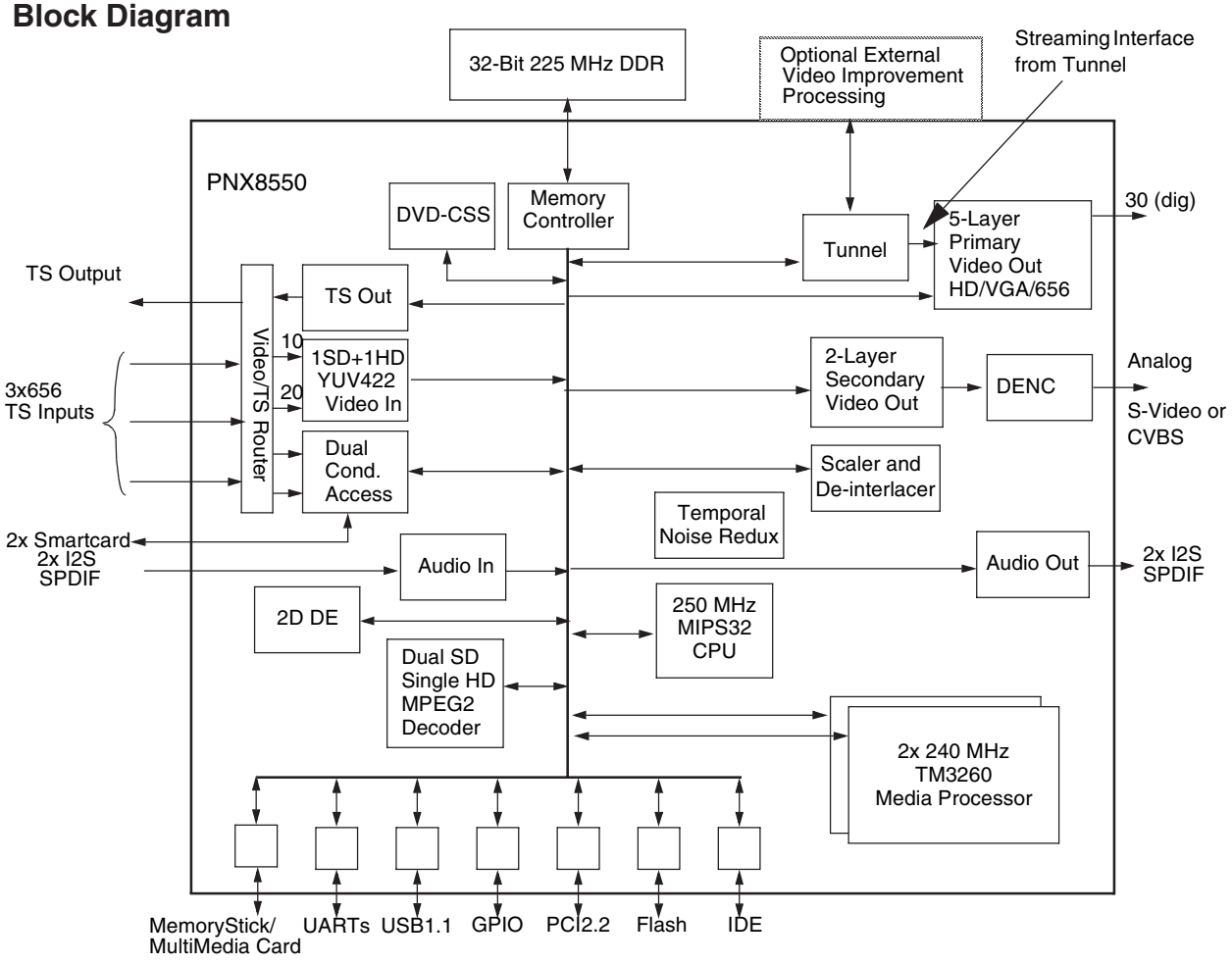

Pin Configuration

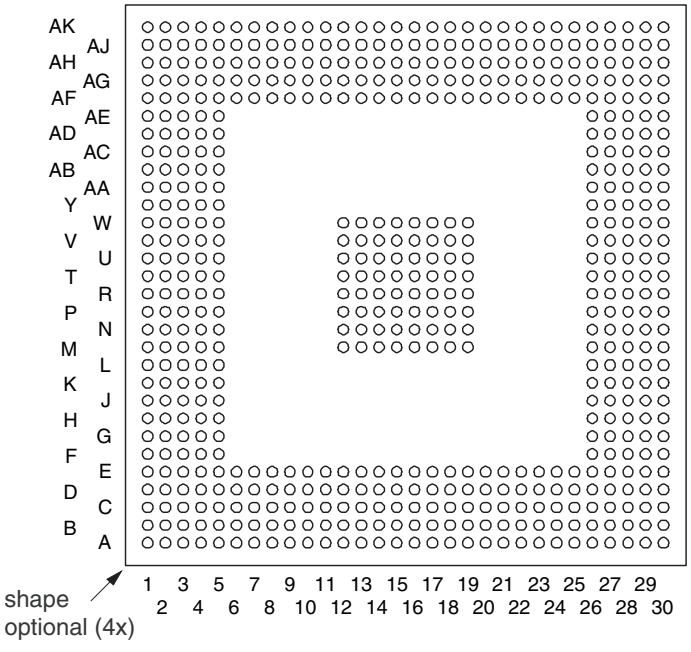

E_14700_088.eps
250505

Figure 9-9 Internal block diagram and pin configuration

9.3.8 Diagram B5F, LD3985M33 (IC 7M05/6)
Diagram B6, LD3985M33 (IC 7G42)
Diagram B7A, LD3985M33 (IC 7B25)

Block Diagram

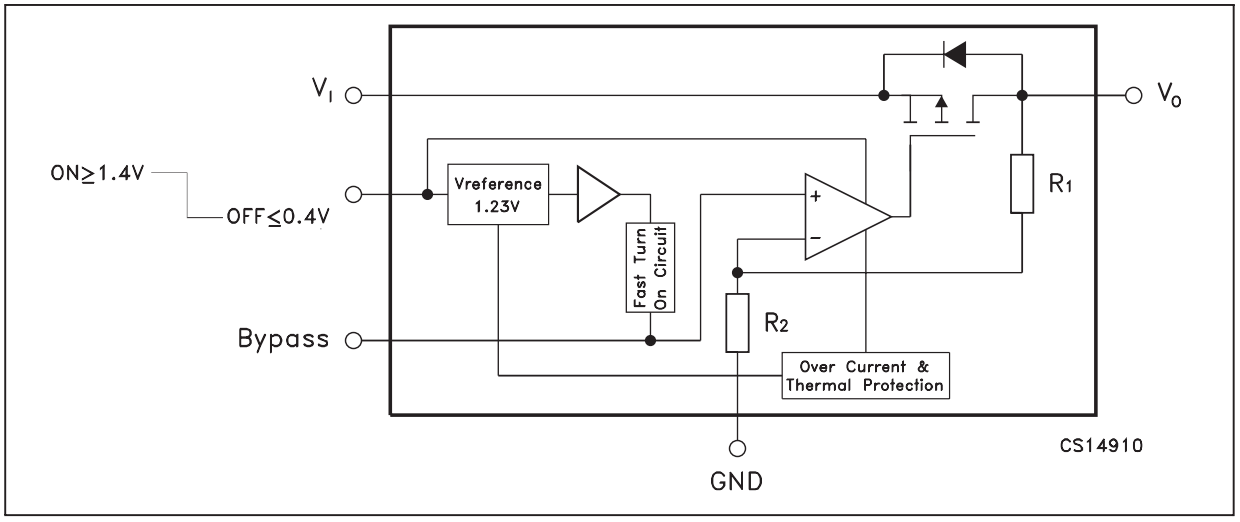

Pin Configuration

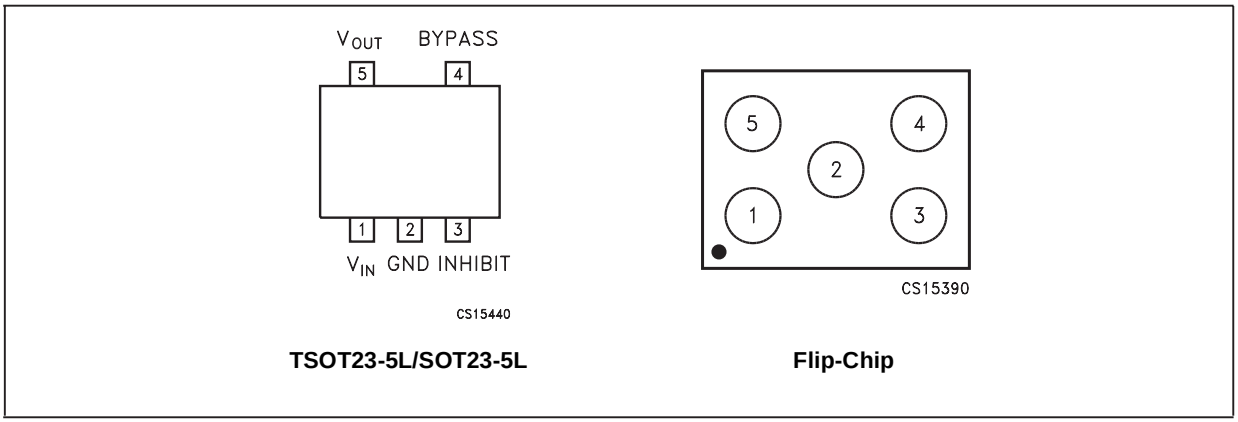

G_16290_084.eps
020206

Figure 9-10 Internal block diagram and pin configuration

9.3.9 Diagram B6, ADV7123KSTZ140 (IC 7G40)

Block Diagram

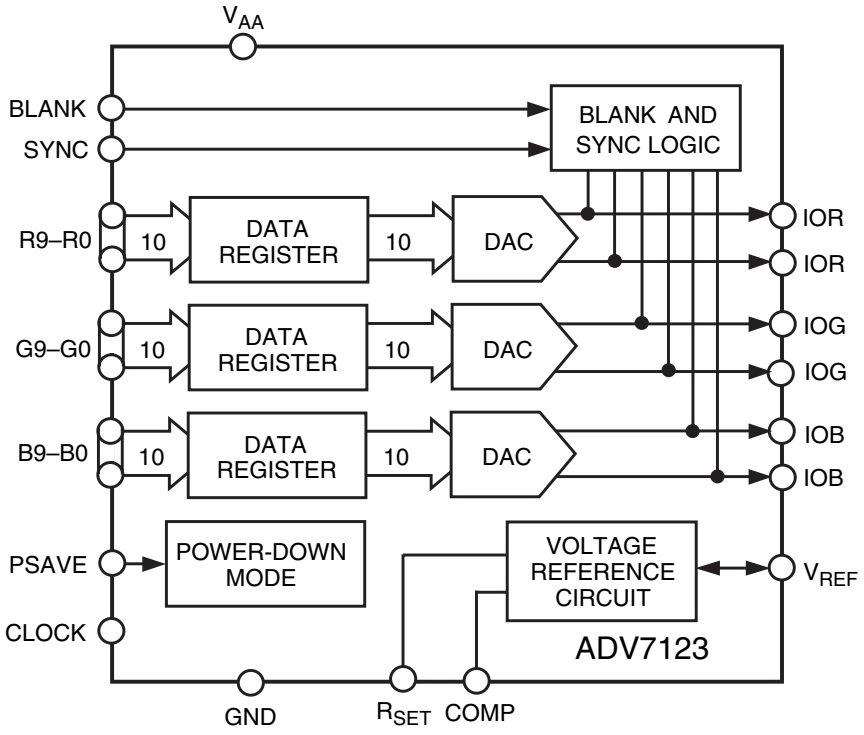

Pin Configuration

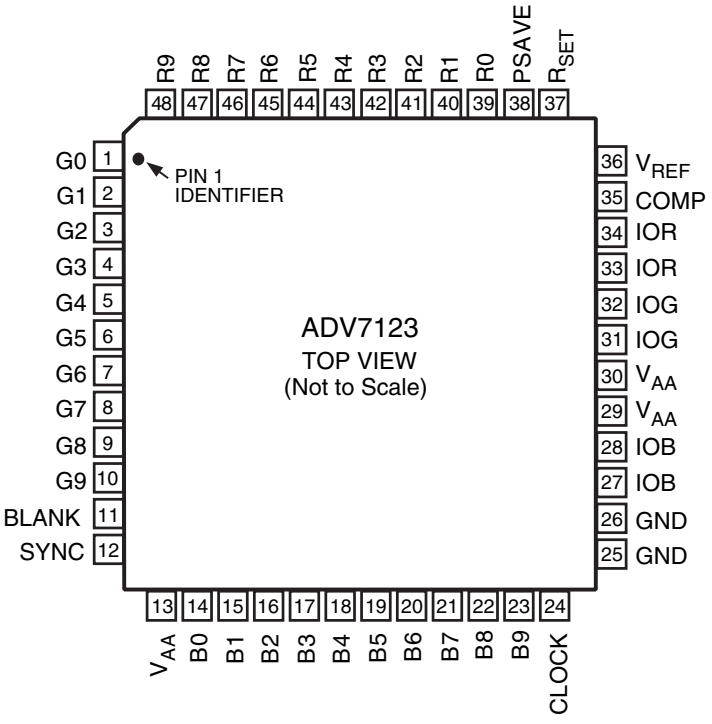

G_16290_083.eps
020206

Figure 9-11 Internal block diagram and pin configuration

9.3.10 Diagram B7A, LD1117DT33 (IC 7B45)

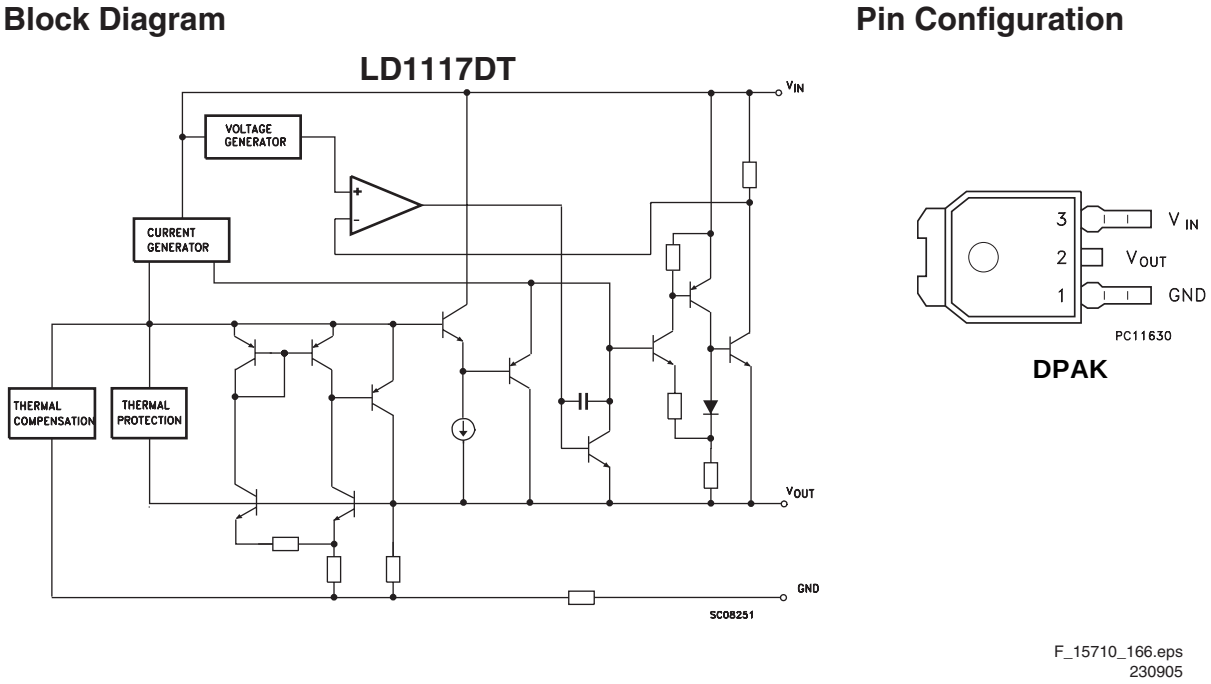

Figure 9-12 Internal block diagram and pin configuration

9.3.11 Diagram B8A, LM339P (IC 7D10)

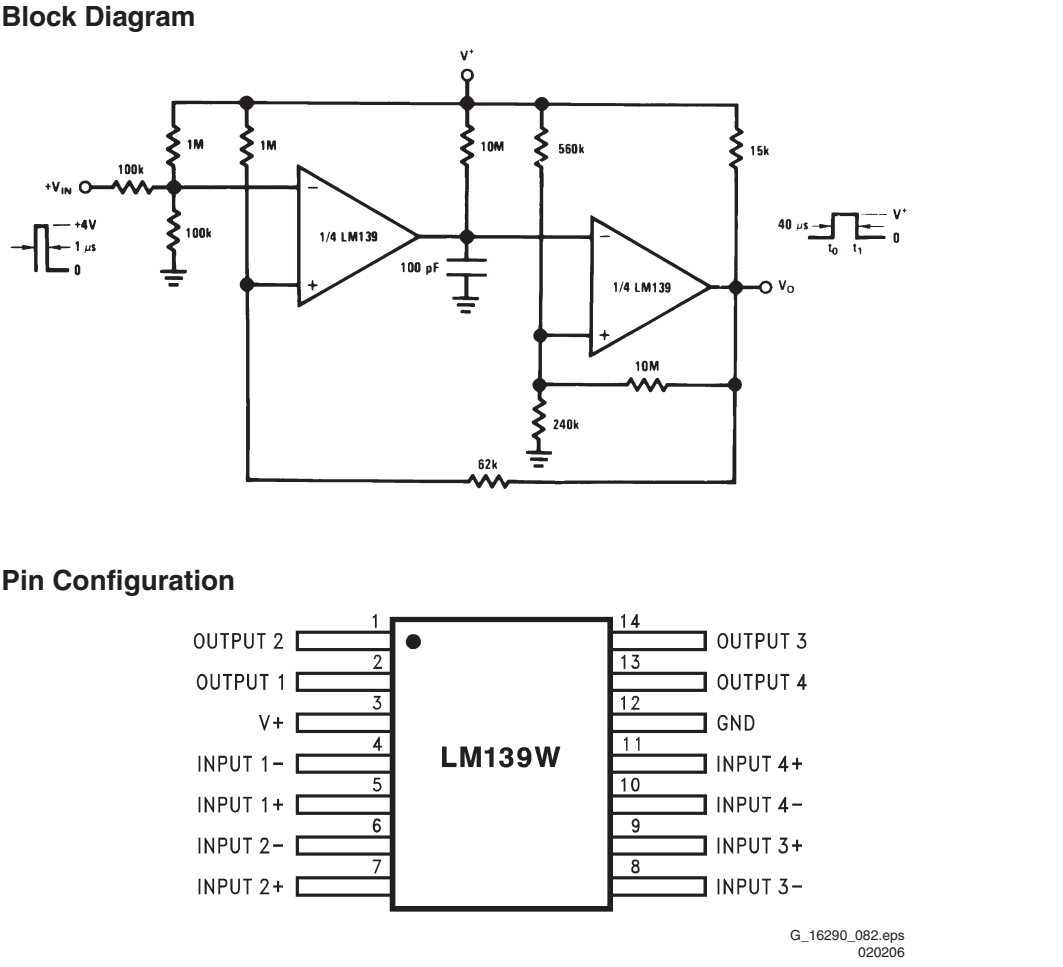

Figure 9-13 Internal block diagram and pin configuration

9.3.12 Diagram B7B, TDA9975H (IC 7B50)

Block Diagram

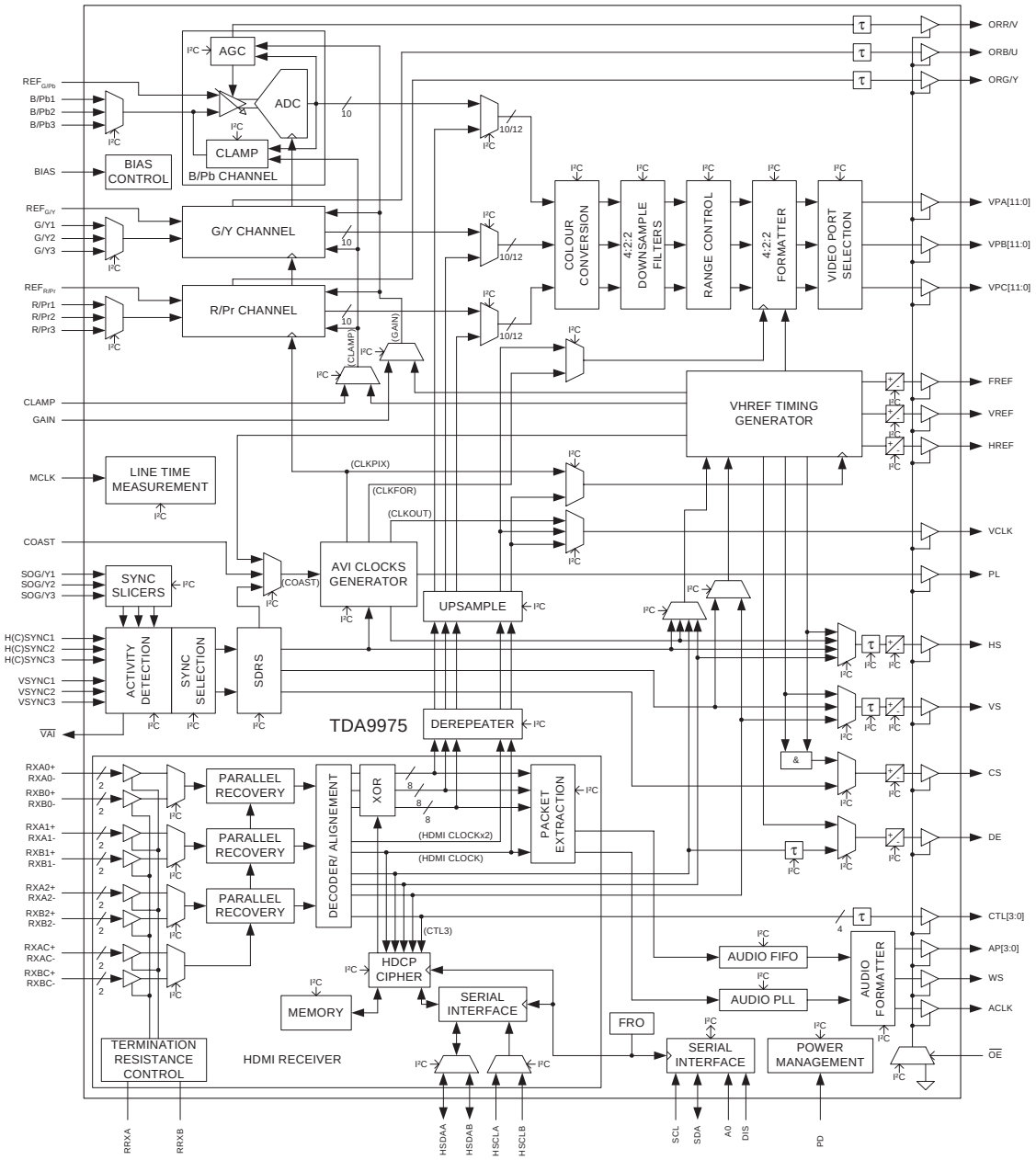

Pin Configuration

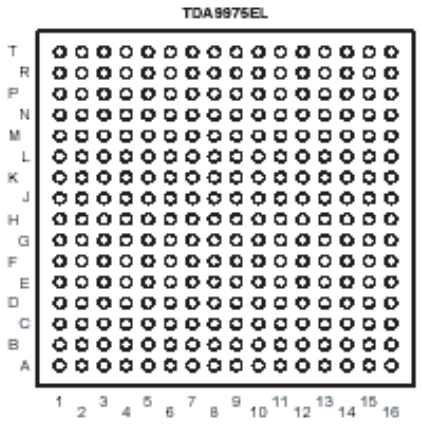

F_15400_135.eps
240505

Figure 9-14 Internal block diagram and pin configuration

10. Spare Parts List

Sets Listed

8670 000 22916	26PF5321D/37
8670 000 22895	32PF5321D/37
8670 000 22887	32PF7321D/37
8670 000 22903	37PF7321D/37
8670 000 24179	32PF7421D/37
8670 000 22891	42PF7421D/37

Set Level

Various

1012	3139 267 24441	IR Assy Ecobaby [J]
1014	3139 267 27821	Control Assy 32&26 [E]
1016	3139 267 17401	Side I/O Assy [D]
1069	3104 328 41725	Stby & Audio [SA] 32&37”
1069⚠	3104 328 43895	Stby & Audio[SA] 42”
1099⚠	9322 221 01682	LCD-LC260WX2-SL01
1099⚠	9322 226 39682	LCD-LC420W02-A6
1099⚠	9322 230 03682	LCD-LC320W01-SL06
1099⚠	9322 231 55682	LCD-LC370WX1-SL02
1099⚠	9322 231 56682	LCD-LC320W01-SL02
1150	3139 267 17613	SSB Assy 26”
1150	3139 267 24513	SSB Assy 37” & 42”
1153	3139 268 00211	SSB SUB Assy 32” & Up
1153	3139 268 01293	SSB SUB Assy 32” & Up
1188	3104 328 36211	LCD Supply 42"
1188	3104 328 36301	LCD Supply 32"
1188	3104 328 38621	LCD Supply 37"
1188⚠	3122 137 23241	LCD Supply 26"
8002	3104 311 08061	Cable 2p3/120/Inlet
8303	3104 311 08261	Cable 4p/820/4p
8304	3104 311 08291	Cable 4p/680/4p
8304	3139 131 06921	Cable 4p/480/4p Wh
8305⚠	3104 311 08401	Cable 3p/280/3p
8305	3104 311 08411	Cable 3p/340/3p
8305	3104 311 10871	Cable 3p/1000/3p
8306	3104 311 02431	Cable 2p3/820/2p3
8306	3104 311 08351	Cable 2p3/340/2p3
8308	3104 311 06951	Cable 2p3/180/2p
8308	3104 311 08071	Cable 2P3/140
8309	3104 311 08321	Cable 3p/680/3p
8309	3139 131 06911	Cable 3p/560/3p Wh
8310	3139 131 07361	Cable 2p3/120/GND
8316	3104 157 02041	Cable 12p/340/12p Bk
8316⚠	3104 311 07261	Cable 12p/120/12p
8316	3104 311 07981	Cable 12p/180/12p
8316	3139 131 07821	Cable 12p/340/12p
8317⚠	3104 311 08191	Cable 12p/1200/12p
8317	3104 311 08201	Cable 12p/1300/12p
8317	3139 131 07721	Cable 12p/680/12p
8317	3139 131 07921	Cable 14p/480/12p
8320	3104 311 08331	Cable 3p/820/3p
8520	3139 131 06081	Cable Inverter
8740	3139 131 06903	Cable 04p/1k 680/2x2ft
8740	3139 131 07351	Cable 4p/680 680/ft
8G50⚠	3104 311 08891	Cable 31p/480/30p
8G50	3104 311 09701	Cable 31p/380/30p
8G50	3139 131 05682	Cable 31p/220/30P
8J02	3139 131 06761	Cable 13p/140/13p Bk
8J02	3139 131 07201	Cable 13p/340/10 11p
8M01	3139 110 27691	Cable 3p/400/3p Bk
8M02	3139 131 07411	Cable 7p/820/7p
8M02⚠	3139 131 07421	Cable 7p/680/7p
8M02	3139 131 07431	Cable 7p/340/7p
8M21	3139 110 27901	Cable 6p/480/06p
8M36	3104 311 10291	Cable 11p/820/11p
8M36	3139 110 28221	Cable 11p/280/11p Bk
8M36	3139 110 28231	Cable 11p/340/11p Bk
8M60	3139 131 07191	Cable 4p/820/4p
8M60	3139 131 07301	Cable 4p/480/4p USB
8M60	3139 131 07371	Cable 4p/480/4p USB
8M60	3139 131 07441	Cable 4p/1k/4p USB
8M65	3139 131 07231	Cable 2p3/280/Gnd
8P06	3139 131 07511	Cable 30p/140/30p

-mm-

5213	2422 264 00485	Loudsp. 8Ω 15W FR
5213	2422 264 00595	Loudsp. 8Ω 15W FR
5215	2422 264 00582	Loudsp. 8Ω 15W TW

LCD Supply (32") [A]

Various

1007⚠	4822 071 55002	Fuse T5A 250V
1304	2422 025 10647	Connector 4p m
1305	4822 267 10735	Connector 3p
1306	2422 025 16374	Connector 2p m
1307	2422 025 10647	Connector 4p m
1308	4822 265 20723	Connector 2p
1309	2422 025 11143	Connector 3p m
1400⚠	2422 086 00208	Fuse 4A T 250V
1402	4822 252 60151	Surge protect
1410	4822 265 11253	Fuse holder
1411	4822 265 11253	Fuse holder
1450⚠	2422 132 07411	Relay 1p 5V 5A
1M02	2422 025 11244	Connector 7p m

-||-

2000⚠	2252 811 95022	1.5nF 20% 250V
2002	4822 124 11767	470μF 20% 25V
2003	4822 124 80061	1000μF 20% 25V
2007	4822 126 14583	470nF 10% 16V 0805
2008	4822 126 14583	470nF 10% 16V 0805
2009	2238 867 18101	100pF 1% 50V 0603
2010	4822 124 40207	100μF 20% 25V
2012	4822 126 14138	680pF 10% 2kV
2013	4822 126 14138	680pF 10% 2kV
2014⚠	4822 126 13451	2.2nF 10% 2kV
2015	5322 126 11583	10nF 10% 50V 0603
2016	2238 586 59812	100nF 20% 50V 0603
2019	5322 126 11583	10nF 10% 50V 0603
2020	4822 124 12285	2200μF 20% 16V
2021	4822 124 12285	2200μF 20% 16V
2022	2020 021 00039	1800μF 20% 35V
2023	4822 126 14583	470nF 10% 16V 0805
2024	2020 552 96326	220nF 10% 16V
2025	2020 552 96683	220nF 10% 50V
2026	4822 126 14238	2.2nF 50V 0603
2028	5322 126 11578	1nF 10% 50V 0603
2029	5322 126 11578	1nF 10% 50V 0603
2031	5322 126 11583	10nF 10% 50V 0603
2033	2020 552 96683	220nF 10% 50V
2034	2238 867 18101	100pF 1% 50V 0603
2035	2238 867 18101	100pF 1% 50V 0603
2038	2020 021 00039	1800μF 20% 35V
2039	4822 126 14583	470nF 10% 16V 0805
2040	4822 126 14249	560pF 10% 50V 0603
2041	2020 552 96683	220nF 10% 50V
2042	2020 552 96683	220nF 10% 50V
2043	2020 552 96683	220nF 10% 50V
2044	5322 126 11578	1nF 10% 50V 0603
2045	5322 126 11578	1nF 10% 50V 0603
2046	3198 017 34730	47nF 16V 0603
2047	5322 126 11583	10nF 10% 50V 0603
2048	5322 126 11578	1nF 10% 50V 0603
2050	5322 126 11578	1nF 10% 50V 0603
2051	2020 552 96683	220nF 10% 50V
2052	2020 552 96683	220nF 10% 50V
2053	2020 552 96683	220nF 10% 50V
2060	4822 126 14238	2.2nF 50V 0603
2061	4822 126 14238	2.2nF 50V 0603
2062	4822 126 14238	2.2nF 50V 0603
2063	4822 126 13881	470pF 5% 50V
2064	4822 126 13881	470pF 5% 50V
2065	4822 126 14238	2.2nF 50V 0603
2071	5322 126 11578	1nF 10% 50V 0603
2072	5322 126 11578	1nF 10% 50V 0603
2077	4822 126 14238	2.2nF 50V 0603
2290	5322 126 11583	10nF 10% 50V 0603
2291	4822 126 13881	470pF 5% 50V
2292	4822 124 12417	2200μF 20% 25V
2293	4822 126 13881	470pF 5% 50V
2294	4822 124 12417	2200μF 20% 25V
2400⚠	2222 338 22474	470nF 20% 275V
2401⚠	2222 338 22474	470nF 20% 275V
2407⚠	2252 811 95017	470pF 10% 250V
2815	2020 024 90748	820μF 20% 250V
2816	2020 024 90748	820μF 20% 250V

-WW-

3000⚠	4822 052 10478	4.7Ω 5% 0.33W
3001	4822 051 30101	100Ω 5% 0.062W
3002	4822 117 12925	47kΩ 1% 0.063W 0603
3003	4822 117 13632	100kΩ 1% 0603 0.62W
3004	4822 051 30273	27kΩ 5% 0.062W
3005	4822 051 30333	33kΩ 5% 0.062W
3006	4822 051 30103	10kΩ 5% 0.062W
3007	4822 051 30103	10kΩ 5% 0.062W
3008	4822 051 30331	330Ω 5% 0.062W
3009	4822 051 30332	3.3Ω 5% 0.062W
3010	4822 051 30471	47Ω 5% 0.062W
3011	4822 051 30471	47Ω 5% 0.062W
3012	4822 051 30153	15kΩ 5% 0.062W
3013	4822 051 30103	10kΩ 5% 0.062W
3014⚠	4822 052 10101	100Ω 5% 0.33W
3015⚠	4822 052 10479	47Ω 5% 0.33W
3016	4822 051 30332	3.3Ω 5% 0.062W
3017⚠	4822 052 10101	100Ω 5% 0.33W
3018⚠	4822 052 10479	47Ω 5% 0.33W
3019	4822 051 30332	3.3Ω 5% 0.062W
3020	4822 051 30332	3.3Ω 5% 0.062W
3021	4822 117 12971	15Ω 5% 0603 0.62W
3022	4822 051 30681	680Ω 5% 0.062W
3023	4822 051 30153	15kΩ 5% 0.062W
3025	3198 021 31820	1.8kΩ 5% 0.062W 0603
3026	2120 368 90118	Potm. lin. 470Ω hor.
3027	4822 117 13632	100kΩ 1% 0603 0.62W
3028	4822 051 30332	3.3Ω 5% 0.062W
3029	4822 051 30332	3.3Ω 5% 0.062W
3030	4822 051 30183	18kΩ 5% 0.062W
3031	4822 051 30103	10kΩ 5% 0.062W
3032	4822 051 30223	22kΩ 5% 0.062W
3033⚠	4822 052 11108	1Ω 5% 0.5W
3034	4822 051 30102	1kΩ 5% 0.062W
3035	4822 051 30332	3.3Ω 5% 0.062W
3037	4822 051 30153	15kΩ 5% 0.062W
3040	3198 021 38220	8.2kΩ 5% 0.062W 0603
3041	4822 051 30333	33kΩ 5% 0.062W
3043	4822 051 30109	10Ω 5% 0.062W
3045	4822 117 12971	15Ω 5% 0603 0.62W
3046	4822 117 12971	15Ω 5% 0603 0.62W
3047	4822 051 30479	47Ω 5% 0.062W
3048	4822 051 30272	2.7kΩ 5% 0.062W
3050	4822 050 28204	820kΩ 1% 0.6W
3052	2322 704 67502	7.5kΩ 1% 0.5W
3053	4822 050 26804	680kΩ 1% 0.6W
3055	4822 051 30221	220Ω 5% 0.062W
3056	4822 117 12968	820Ω 5% 0.62W
3057	4822 051 30221	220Ω 5% 0.062W
3058	4822 053 20565	5.6MΩ 5% 0.25W
3061	4822 051 30683	68kΩ 5% 0.062W
3064	4822 051 30103	10kΩ 5% 0.062W
3065	4822 117 13632	100kΩ 1% 0603 0.62W
3066	4822 051 30103	10kΩ 5% 0.062W
3067	4822 051 30101	100Ω 5% 0.062W
3068	4822 051 30222	2.2kΩ 5% 0.062W
3070	4822 051 30102	1kΩ 5% 0.062W
3071	4822 051 30103	10kΩ 5% 0.062W
3075	4822 051 30102	1kΩ 5% 0.062W
3089	4822 051 30103	10kΩ 5% 0.062W
3100	4822 051 30109	10Ω 5% 0.062W
3101	4822 051 30102	1kΩ 5% 0.062W
3292	4822 051 30561	560Ω 5% 0.062W
3400⚠	2122 550 00158	VDR 1mA 612V
3401⚠	4822 053 21475	4.7MΩ 5% 0.5W
3402⚠	4822 053 21475	4.7MΩ 5% 0.5W
3403⚠	4822 053 21475	4.7MΩ 5% 0.5W
3404	4822 116 83872	220Ω 5% 0.5W
3999	4822 051 30103	10kΩ 5% 0.062W

-mm-

5001	2422 531 02444	S13932-04Y
5002⚠	3104 308 21231	2652.0001A
5005	4822 526 10704	Bead 50 Ω at 100MHz
5007	4822 526 10704	Bead 50 Ω at 100MHz
5008	4822 526 10704	Bead 50 Ω at 100MHz
5009	4822 157 11411	Bead 80Ω at 100MHz
5010	4822 157 11411	Bead 80Ω at 100MHz
5013	4822 526 10704	Bead 50 Ω at 100MHz
5015	4822 157 11411	Bead 80Ω at 100MHz
5016	4822 157 11411	Bead 80Ω at 100MHz
5017	4822 526 10704	Bead 50 Ω at 100MHz
5025	4822 526 10704	Bead 50 Ω at 100MHz
5026	4822 526 10704	Bead 50 Ω at 100MHz
5027	4822 526 10704	Bead 50 Ω at 100MHz
5028	4822 526 10704	Bead 50 Ω at 100MHz
5040	4822 157 11411	Bead 80Ω at 100MHz
5291	2422 536 00776	33μH 10%
5292	2422 536 00776	33μH 10%
5293	2422 536 00776	33μH 10%
5401⚠	2422 549 43563	Filt. 23MHz 3A DMF3520

5402▲	2422 549 43563	Filt. 23MHz 3A DMF3520

6002	4822 130 11397	BAS316
6003	4822 130 11397	BAS316
6004	4822 130 80622	BAT54
6005	4822 130 80622	BAT54
6006	4822 130 11397	BAS316
6007	4822 130 11397	BAS316
6008	4822 130 11397	BAS316
6009	4822 130 11152	UDZ18B
6010	4822 130 11397	BAS316
6011	4822 130 11397	BAS316
6012	9322 208 80685	BZG05C15
6013	9322 208 80685	BZG05C15
6014	9340 548 67115	PDZ22B
6015	4822 130 11397	BAS316
6017	4822 130 11397	BAS316
6020	4822 130 11397	BAS316
6021	9322 206 26687	STPS20H100CT
6022	4822 130 11148	UDZ4.7B
6023	4822 130 11397	BAS316
6025	9322 206 26687	STPS20H100CT
6027	4822 130 11397	BAS316
6028	4822 130 11397	BAS316
6044	9322 207 11687	STPS20L45CT
6045	9322 207 11687	STPS20L45CT
6051	4822 130 11397	BAS316
6077	9322 202 55685	BYG22D
6078	9322 202 55685	BYG22D
6079	9322 202 55685	BYG22D
6080	9322 202 55685	BYG22D
6081	9340 548 67115	PDZ22B
6154	9322 099 61685	BYG10J
6155	9322 099 61685	BYG10J
6291	4822 130 11572	STPS8H100F
6293	4822 130 11572	STPS8H100F
6460	4822 130 11397	BAS316
6461	4822 130 11397	BAS316
6506▲	4822 130 83147	DF06M
6807▲	9322 199 74682	GBJ6J-B15

7001	9322 108 21682	MC34067P
7002▲	9322 149 04682	TCET1102
7004	3198 010 42310	BC847BW
7005	9322 192 18687	STP15NK50ZFP
7006	9322 192 18687	STP15NK50ZFP
7007	3198 010 42320	BC857BW
7008	3198 010 42320	BC857BW
7009	3198 010 42320	BC857BW
7010	9322 192 16685	TS2431AI
7017	3198 010 42320	BC857BW
7018	3198 010 42310	BC847BW
7030	3198 010 42310	BC847BW

LCD Supply (37") [A]

Various

0100	4822 070 35002	Fuse 5A
1007▲	4822 071 55002	Fuse T5A 250V
1302	4822 252 60151	Surge protect
1303	4822 252 60151	Surge protect
1304	2422 025 10647	Connector 4p m
1305	4822 267 10735	Connector 3p
1306	2422 025 16374	Connector 2p m
1308	4822 265 20723	Connector 2p
1309	2422 025 11143	Connector 3p m
1314	4822 265 11253	Fuse holder
1315	4822 265 11253	Fuse holder
1350▲	2422 132 07411	Relay 1p 5V 5A
1M02	2422 025 11244	Connector 7p m

2002	2020 012 00006	680µF 20% 25V
2003	4822 124 80061	1000µF 20% 25V
2006	5322 126 11578	1nF 10% 50V 0603
2007	2020 552 96684	470nF 10% 25V 0805
2008	4822 126 14583	470nF 10% 16V 0805
2009	4822 126 13881	470pF 5% 50V
2010	4822 124 40207	100µF 20% 25V
2012	4822 126 13862	1.5nF 10% 2kV
2013	4822 126 13862	1.5nF 10% 2kV
2014	4822 126 13451	2.2nF 10% 2kV
2015	5322 126 11583	10nF 10% 50V 0603
2016	2238 586 59812	100nF 20% 50V 0603
2018	4822 124 12417	2200µF 20% 25V
2019	5322 126 11583	10nF 10% 50V 0603
2020	2020 021 00039	1800µF 20% 35V
2021	4822 126 13881	470pF 5% 50V
2022	2020 021 00039	1800µF 20% 35V
2023	2020 552 96684	470nF 10% 25V 0805
2024	2238 586 59812	100nF 20% 50V 0603
2025	2022 552 05679	1µF 10% 16V 0805
2026	4822 126 14238	2.2nF 50V 0603
2028	5322 126 11578	1nF 10% 50V 0603
2029	5322 126 11578	1nF 10% 50V 0603
2031	5322 126 11583	10nF 10% 50V 0603
2033	2022 552 05679	1µF 10% 16V 0805
2034	4822 124 12417	2200µF 20% 25V
2035	5322 126 11578	1nF 10% 50V 0603
2036	5322 126 11578	1nF 10% 50V 0603
2037	4822 126 14238	2.2nF 50V 0603
2038	2020 021 00039	1800µF 20% 35V
2039	5322 126 11583	10nF 10% 50V 0603
2040	4822 126 14249	560pF 10% 50V 0603
2041	2020 021 00039	1800µF 20% 35V
2042	5322 126 11578	1nF 10% 50V 0603
2043	2020 021 00039	1800µF 20% 35V
2044	5322 126 11578	1nF 10% 50V 0603
2045	5322 126 11578	1nF 10% 50V 0603
2046	3198 017 34730	47nF 16V 0603
2047	5322 126 11583	10nF 10% 50V 0603
2048	5322 126 11578	1nF 10% 50V 0603
2049	5322 126 11578	1nF 10% 50V 0603
2050	5322 126 11578	1nF 10% 50V 0603
2051	5322 126 11583	10nF 10% 50V 0603
2052	4822 126 14238	2.2nF 50V 0603
2053	4822 126 13881	470pF 5% 50V
2054	4822 126 13881	470pF 5% 50V
2055	4822 126 14238	2.2nF 50V 0603
2056	4822 126 14238	2.2nF 50V 0603
2057	4822 126 14238	2.2nF 50V 0603
2058	2238 867 18101	100pF 1% 50V 0603
2059	2222 375 24153	15nF 5% 1kV
2060	2222 375 24153	15nF 5% 1kV
2061	2238 867 18101	100pF 1% 50V 0603
2062	2238 867 18101	100pF 1% 50V 0603
2063	2238 586 59812	100nF 20% 50V 0603
2300▲	2222 339 22474	470µF 20% 275V
2301▲	2222 339 22474	470µF 20% 275V
2315	2020 024 90748	820µF 20% 250V
2316	2020 024 90748	820µF 20% 250V
2319	2222 338 22105	1µF 20% 275V
2320	2020 024 90748	820µF 20% 250V
2321	2020 024 90748	820µF 20% 250V

3000▲	4822 052 10478	4.7Ω 5% 0.33W
3001	4822 051 30101	100Ω 5% 0.062W
3002	4822 051 30222	2.2kΩ 5% 0.062W
3003	4822 051 30472	4.7Ω 5% 0.062W
3004	4822 051 30273	27kΩ 5% 0.062W
3005	4822 051 30333	33kΩ 5% 0.062W
3006	4822 051 30103	10kΩ 5% 0.062W
3007	4822 051 30103	10kΩ 5% 0.062W
3008	4822 051 30331	330Ω 5% 0.062W
3009	4822 051 30332	3.3Ω 5% 0.062W
3010	4822 051 30471	47Ω 5% 0.062W
3011	4822 051 30471	47Ω 5% 0.062W
3012	4822 051 30223	22kΩ 5% 0.062W
3013	4822 051 30103	10kΩ 5% 0.062W
3014▲	4822 052 10101	100Ω 5% 0.33W
3015▲	4822 052 10479	47Ω 5% 0.33W
3016	4822 051 30332	3.3Ω 5% 0.062W
3017▲	4822 052 10101	100Ω 5% 0.33W
3018▲	4822 052 10479	47Ω 5% 0.33W
3019	4822 051 30332	3.3Ω 5% 0.062W
3020	4822 051 30332	3.3Ω 5% 0.062W
3021	4822 051 20229	22kΩ 5% 0.1W
3022	4822 051 30681	680Ω 5% 0.062W
3023	4822 051 30103	10kΩ 5% 0.062W
3025	4822 051 30152	1.5Ω 5% 0.062W
3026	2120 368 90118	Potm. lin. 470Ω hor.
3027	4822 117 13632	100kΩ 1% 0603 0.62W
3028	4822 051 30102	1kΩ 5% 0.062W
3029	4822 051 30332	3.3Ω 5% 0.062W
3030	4822 051 30183	18kΩ 5% 0.062W
3031	4822 051 30103	10kΩ 5% 0.062W
3032	4822 051 30223	22kΩ 5% 0.062W
3033	4822 051 30561	560Ω 5% 0.062W
3034	4822 051 30471	47Ω 5% 0.062W
3035	4822 051 30101	100Ω 5% 0.062W
3036	4822 051 30103	10kΩ 5% 0.062W
3037	4822 051 30153	15kΩ 5% 0.062W
3039	4822 051 30102	1kΩ 5% 0.062W
3040	3198 021 38220	8.2kΩ 5% 0.062W 0603
3041	4822 051 30333	33kΩ 5% 0.062W
3042	4822 051 30222	2.2kΩ 5% 0.062W
3043	4822 051 30109	10Ω 5% 0.062W
3044	4822 051 30103	10kΩ 5% 0.062W
3045	4822 051 20229	22kΩ 5% 0.1W
3046	4822 051 20229	22kΩ 5% 0.1W
3047	4822 051 30479	47Ω 5% 0.062W
3048	4822 051 30272	2.7kΩ 5% 0.062W
3049	4822 117 13632	100kΩ 1% 0603 0.62W
3050	4822 053 20155	1.5MΩ 5% 0.25W
3051	4822 051 30103	10kΩ 5% 0.062W
3052	4822 051 30153	15kΩ 5% 0.062W
3054	4822 051 30683	68kΩ 5% 0.062W
3055	4822 051 30221	220Ω 5% 0.062W
3056	4822 051 30221	220Ω 5% 0.062W
3057	4822 051 30221	220Ω 5% 0.062W
3058	4822 053 20565	5.6MΩ 5% 0.25W
3059	5322 117 13019	100kΩ 1% 0.063W 0603
3060	4822 051 30103	10kΩ 5% 0.062W
3061	4822 051 30332	3.3Ω 5% 0.062W
3062	4822 051 30332	3.3Ω 5% 0.062W
3063	4822 051 30103	10kΩ 5% 0.062W
3065	4822 051 30102	1kΩ 5% 0.062W
3071	4822 050 25602	5K60 1% 0.6W
3073	4822 050 25602	5K60 1% 0.6W
3076	4822 050 25602	5K60 1% 0.6W
3077	4822 050 25602	5K60 1% 0.6W
3078	4822 050 25602	5K60 1% 0.6W
3079	4822 050 25602	5K60 1% 0.6W
3081	4822 050 25602	5K60 1% 0.6W
3082	4822 050 25602	5K60 1% 0.6W
3083	4822 050 25602	5K60 1% 0.6W
3085	4822 050 25602	5K60 1% 0.6W
3086	4822 050 25602	5K60 1% 0.6W
3087	4822 050 25602	5K60 1% 0.6W
3089	4822 051 30103	10kΩ 5% 0.062W
3300▲	2122 550 00158	VDR 1mA 612V
3301▲	4822 053 21475	4.7MΩ 5% 0.5W
3302▲	4822 053 21475	4.7MΩ 5% 0.5W
3303▲	4822 053 21475	4.7MΩ 5% 0.5W
3304	4822 116 83872	220Ω 5% 0.5W
3305	4822 116 83872	220Ω 5% 0.5W
3306	4822 051 30102	1kΩ 5% 0.062W
3308	4822 053 11223	22kΩ 5% 2W
3318	4822 053 10471	470Ω 5% 1W
3999	4822 051 30101	100Ω 5% 0.062W
9311	3198 021 90030	Jumper 0603

5001	2422 531 02444	S13932-04Y
5002	3104 308 21211	BS51321-02 B
5005	4822 526 10704	Bead 50 Ω at 100MHz
5007	4822 526 10704	Bead 50 Ω at 100MHz
5008	4822 526 10704	Bead 50 Ω at 100MHz
5009	4822 157 11411	Bead 80Ω at 100MHz
5010	4822 157 11411	Bead 80Ω at 100MHz
5011	3104 308 21211	BS51321-02 B
5012	4822 526 10704	Bead 50 Ω at 100MHz
5013	4822 526 10704	Bead 50 Ω at 100MHz
5015	4822 157 11411	Bead 80Ω at 100MHz
5016	4822 157 11411	Bead 80Ω at 100MHz
5017	4822 526 10704	Bead 50 Ω at 100MHz
5018	2422 535 94636	3.3µF 20%
5019	2422 536 00776	33µH 10%
5020	2422 536 00776	33µH 10%
5021	4822 157 11411	Bead 80Ω at 100MHz
5022	4822 157 11411	Bead 80Ω at 100MHz
5025	4822 157 11411	Bead 80Ω at 100MHz
5026	4822 157 11411	Bead 80Ω at 100MHz
5305▲	2422 549 43563	Filt. 23MHz 3A DMF3520
5306▲	2422 549 43563	Filt. 23MHz 3A DMF3520
5308	4822 157 11411	Bead 80Ω at 100MHz

6002	4822 130 11397	BAS316
6003	4822 130 11397	BAS316
6004	4822 130 80622	BAT54
6005	4822 130 80622	BAT54
6006	4822 130 11397	BAS316
6007	4822 130 11397	BAS316
6008	4822 130 11397	BAS316
6010	4822 130 11397	BAS316
6011	4822 130 11397	BAS316
6012	9322 208 80685	BZG05C15
6013	9322 208 80685	BZG05C15
6014	9340 548 71115	PDZ33B
6015	4822 130 11397	BAS316
6017	4822 130 11397	BAS316
6018	4822 130 11152	UDZ18B
6019	9322 173 47687	STPS20L40CFP
6021	4822 130 11596	BYW29EX-200

6022	4822 130 11148	UDZ4.7B
6023	4822 130 11397	BAS316
6024	9322 202 55685	BYG22D
6025	9322 202 55685	BYG22D
6026	4822 130 11397	BAS316
6027	4822 130 11397	BAS316
6028	4822 130 11397	BAS316
6029	4822 130 11596	BYW29EX-200
6030	4822 130 11596	BYW29EX-200
6031	4822 130 11596	BYW29EX-200
6032	9322 202 55685	BYG22D
6033	9322 202 55685	BYG22D
6038	4822 130 11397	BAS316
6040	4822 130 11596	BYW29EX-200
6041	4822 130 11596	BYW29EX-200
6304	4822 130 11397	BAS316
6305	4822 130 11397	BAS316
6306	4822 130 83147	DF06M
6307	9322 199 74682	GBJ6J-B15
6314	9340 292 50135	BZG03-C200
6315	9340 292 50135	BZG03-C200
6316	9340 548 71115	PDZ33B
6317	9340 548 71115	PDZ33B
6318	4822 130 11397	BAS316
6360	4822 130 11397	BAS316
6361	4822 130 11397	BAS316

7001	9322 108 21682	MC34067P
7002▲	9322 149 04682	TCET1102
7003	3198 010 42310	BC847BW
7004	3198 010 42310	BC847BW
7005	9322 192 18687	STP15NK50ZFP
7006	9322 192 18687	STP15NK50ZFP
7007	3198 010 42320	BC857BW
7008	3198 010 42320	BC857BW
7009	3198 010 42320	BC857BW
7010	9322 192 16685	TS2431AI
7011	3198 010 42320	BC857BW
7012	3198 010 42310	BC847BW
7307▲	9322 149 04682	TCET1102

LCD Supply (42") [A]

Various

1303	2422 025 04475	Connector 4p m
1304	2422 025 10647	Connector 4p m
1305	4822 267 10735	Connector 3p
1306	2422 025 16374	Connector 2p m
1307	2422 025 10647	Connector 4p m
1308	4822 265 20723	Connector 2p
1309	2422 025 11143	Connector 3p m
1320	2422 025 11143	Connector 3p m
1400▲	2422 086 00208	Fuse 4A T 250V
1402	4822 252 60151	Surge protect
1405▲	4822 265 11253	Fuse holder
1410▲	4822 265 11253	Fuse holder
1420	3104 311 08391	Cable 3p/140/3p Wh
1450▲	2422 132 07411	Relay 1p 5V 5A
1B06	4822 267 10735	Connector 3p
1C05	4822 267 10735	Connector 3p
1D00▲	2422 086 00208	Fuse 4A T 250V
1D02	4822 252 60151	Surge protect
1D10▲	4822 265 11253	Fuse holder
1D50▲	2422 132 07411	Relay 1p 5V 5A
1M02	2422 025 11244	Connector 7p m
1U07	2422 086 00678	Fuse 5A T 250V
1U07▲	4822 071 55002	Fuse T5A 250V

2000	2022 554 04157	1.5NF 250V 20%
2000▲	2252 811 95022	1.5nF 20% 250V
2002	4822 124 11767	470µF 20% 25V
2003	4822 124 80061	1000µF 20% 25V
2007	2020 552 96684	470nF 10% 25V 0805
2008	4822 126 14583	470nF 10% 16V 0805
2009	2238 867 18101	100pF 1% 50V 0603
2010	4822 124 40207	100µF 20% 25V
2011	4822 121 70617	10nF 5% 1.6kV
2012	4822 126 13862	1.5nF 10% 2kV
2013	4822 126 13862	1.5nF 10% 2kV
2014	4822 126 13451	2.2nF 10% 2kV
2015	5322 126 11583	10nF 10% 50V 0603
2016	2238 586 59812	100nF 20% 50V 0603
2017	4822 121 70617	10nF 5% 1.6kV
2019	5322 126 11583	10nF 10% 50V 0603
2020	4822 124 12285	2200µF 20% 16V
2021	2238 867 18101	100pF 1% 50V 0603
2022	2020 021 00039	1800µF 20% 35V
2023	2020 552 96684	470nF 10% 25V 0805
2024	2020 552 96326	220nF 10% 16V
2025	4822 121 51319	1µF 10% 63V
2026	4822 126 14238	2.2nF 50V 0603
2028	5322 126 11578	1nF 10% 50V 0603
2029	5322 126 11578	1nF 10% 50V 0603
2031	5322 126 11583	10nF 10% 50V 0603
2032	4822 126 13193	4.7nF 10% 63V
2033	4822 121 51319	1µF 10% 63V
2034	2238 867 18101	100pF 1% 50V 0603
2035	5322 126 11578	1nF 10% 50V 0603
2038	2020 021 00039	1800µF 20% 35V
2039	5322 126 11583	10nF 10% 50V 0603
2040	4822 126 14249	560pF 10% 50V 0603
2044	5322 126 11578	1nF 10% 50V 0603
2045	5322 126 11578	1nF 10% 50V 0603
2046	3198 017 34730	47nF 16V 0603
2047	5322 126 11583	10nF 10% 50V 0603
2048	5322 126 11578	1nF 10% 50V 0603
2050	5322 126 11578	1nF 10% 50V 0603
2060	4822 126 14238	2.2nF 50V 0603
2061	4822 126 14238	2.2nF 50V 0603
2062	4822 126 14238	2.2nF 50V 0603
2063	4822 126 13881	470pF 5% 50V
2064	4822 126 13881	470pF 5% 50V
2065	4822 126 14238	2.2nF 50V 0603
2071	5322 126 11578	1nF 10% 50V 0603
2072	5322 126 11578	1nF 10% 50V 0603
2077	4822 126 14238	2.2nF 50V 0603
2290	5322 126 11583	10nF 10% 50V 0603
2400▲	2222 338 22474	470nF 20% 275V
2401▲	2222 338 22474	470nF 20% 275V
2405▲	2020 554 90167	220pF 10% 250V
2407▲	2020 554 90167	220pF 10% 250V
2815	2020 024 90748	820µF 20% 250V
2816	2020 024 90748	820µF 20% 250V
2817	4822 121 70162	10nF 5% 400V
2B90	5322 126 11583	10nF 10% 50V 0603
2B91	4822 126 13881	470pF 5% 50V
2B92	4822 124 12417	2200µF 20% 25V
2B93	4822 126 13881	470pF 5% 50V
2B94	4822 124 12417	2200µF 20% 25V
2D00▲	2222 338 22474	470nF 20% 275V
2D01▲	2222 338 22474	470nF 20% 275V
2D05▲	2020 554 90167	220pF 10% 250V
2D07▲	2020 554 90167	220pF 10% 250V
2H15	2020 024 90748	820µF 20% 250V
2H16	2020 024 90748	820µF 20% 250V
2H17	4822 121 70162	10nF 5% 400V
2U00	2022 554 04157	1.5NF 250V 20%
2U00▲	2252 811 95022	1.5nF 20% 250V
2U02	4822 124 11767	470µF 20% 25V
2U03	4822 124 80061	1000µF 20% 25V
2U07	2020 552 96684	470nF 10% 25V 0805
2U08	4822 126 14583	470nF 10% 16V 0805
2U09	2238 867 18101	100pF 1% 50V 0603
2U10	4822 124 40207	100µF 20% 25V
2U11	4822 121 70617	10nF 5% 1.6kV
2U12	4822 126 13862	1.5nF 10% 2kV
2U13	4822 126 13862	1.5nF 10% 2kV
2U14	4822 126 13451	2.2nF 10% 2kV
2U15	5322 126 11583	10nF 10% 50V 0603
2U16	2238 586 59812	100nF 20% 50V 0603
2U17	4822 121 70617	10nF 5% 1.6kV
2U19	5322 126 11583	10nF 10% 50V 0603
2U21	2238 867 18101	100pF 1% 50V 0603
2U22	2020 021 00039	1800µF 20% 35V
2U23	2020 552 96684	470nF 10% 25V 0805
2U24	2020 552 96326	220nF 10% 16V
2U25	4822 121 51319	1µF 10% 63V
2U26	4822 126 14238	2.2nF 50V 0603
2U29	5322 126 11578	1nF 10% 50V 0603
2U32	4822 126 13193	4.7nF 10% 63V
2U33	4822 121 51319	1µF 10% 63V
2U34	2238 867 18101	100pF 1% 50V 0603
2U38	2020 021 00039	1800µF 20% 35V
2U39	5322 126 11583	10nF 10% 50V 0603
2U40	4822 126 14249	560pF 10% 50V 0603
2U45	5322 126 11578	1nF 10% 50V 0603
2U46	3198 017 34730	47nF 16V 0603
2U47	5322 126 11583	10nF 10% 50V 0603
2U48	5322 126 11578	1nF 10% 50V 0603
2U50	5322 126 11578	1nF 10% 50V 0603
2U60	4822 126 14238	2.2nF 50V 0603
2U61	4822 126 14238	2.2nF 50V 0603
2U62	4822 126 14238	2.2nF 50V 0603
2U63	4822 126 13881	470pF 5% 50V
2U64	4822 126 13881	470pF 5% 50V
2U65	4822 126 14238	2.2nF 50V 0603
2U71	5322 126 11578	1nF 10% 50V 0603
2U72	5322 126 11578	1nF 10% 50V 0603
2U77	4822 126 14238	2.2nF 50V 0603

3000▲	4822 052 10478	4.7Ω 5% 0.33W
3001	4822 051 30101	100Ω 5% 0.062W
3002	4822 051 30103	10kΩ 5% 0.062W
3003	4822 117 13632	100kΩ 1% 0603 0.62W
3004	4822 051 30273	27kΩ 5% 0.062W
3005	4822 051 30333	33kΩ 5% 0.062W
3006	4822 051 30103	10kΩ 5% 0.062W
3007	4822 051 30103	10kΩ 5% 0.062W
3008	4822 051 30331	330Ω 5% 0.062W
3009	4822 051 30332	3.3Ω 5% 0.062W
3010	4822 051 30471	47Ω 5% 0.062W
3011	4822 051 30471	47Ω 5% 0.062W
3012	4822 051 30153	15kΩ 5% 0.062W
3013	4822 051 30103	10kΩ 5% 0.062W
3014▲	4822 052 10101	100Ω 5% 0.33W
3015▲	4822 052 10479	47Ω 5% 0.33W
3016	4822 051 30222	2.2kΩ 5% 0.062W
3017▲	4822 052 10101	100Ω 5% 0.33W
3018▲	4822 052 10479	47Ω 5% 0.33W
3019	4822 051 30222	2.2kΩ 5% 0.062W
3020	4822 051 30222	2.2kΩ 5% 0.062W
3021	3198 021 32290	22Ω 5% 0603
3021	9965 000 23109	22Ω 5% 0603
3022	4822 051 30681	680Ω 5% 0.062W
3023	4822 051 30153	15kΩ 5% 0.062W
3025	3198 021 31820	1.8kΩ 5% 0.062W 0603
3026	2120 368 90118	Potm. lin. 470Ω hor.
3027	4822 117 13632	100kΩ 1% 0603 0.62W
3028	4822 051 30102	1kΩ 5% 0.062W
3029	4822 051 30222	2.2kΩ 5% 0.062W
3030	4822 051 30183	18kΩ 5% 0.062W
3031	4822 051 30223	22kΩ 5% 0.062W
3032	4822 051 30103	10kΩ 5% 0.062W
3034	4822 051 30102	1kΩ 5% 0.062W
3037	4822 051 30153	15kΩ 5% 0.062W
3038	4822 051 30333	33kΩ 5% 0.062W
3040	3198 021 38220	8.2kΩ 5% 0.062W 0603
3041	4822 051 30333	33kΩ 5% 0.062W
3043	4822 051 30109	10Ω 5% 0.062W
3045	3198 021 32290	22Ω 5% 0603
3045	9965 000 23109	22Ω 5% 0603
3046	3198 021 32290	22Ω 5% 0603
3046	9965 000 23109	22Ω 5% 0603
3047	4822 051 30479	47Ω 5% 0.062W
3048	4822 051 30272	2.7kΩ 5% 0.062W
3050	4822 050 28204	820kΩ 1% 0.6W
3052	2322 704 67502	7.5kΩ 1% 0.5W
3053	4822 050 26804	680kΩ 1% 0.6W
3055	4822 051 30221	220Ω 5% 0.062W
3056	4822 051 30221	220Ω 5% 0.062W
3057	4822 051 30221	220Ω 5% 0.062W
3058	4822 053 20565	5.6MΩ 5% 0.25W
3061	4822 051 30683	68kΩ 5% 0.062W
3064	4822 051 30103	10kΩ 5% 0.062W
3065	4822 117 12925	47kΩ 1% 0.063W 0603
3066	4822 051 30103	10kΩ 5% 0.062W
3067	4822 051 30101	100Ω 5% 0.062W
3068	4822 051 30222	2.2kΩ 5% 0.062W
3070	4822 051 30102	1kΩ 5% 0.062W
3071	4822 051 30103	10kΩ 5% 0.062W
3075	4822 051 30102	1kΩ 5% 0.062W
3089	4822 051 30103	10kΩ 5% 0.062W
3292	4822 051 30561	560Ω 5% 0.062W
3400▲	2122 550 00158	VDR 1mA 612V
3401▲	4822 053 21475	4.7MΩ 5% 0.5W
3402▲	4822 053 21475	4.7MΩ 5% 0.5W
3403▲	4822 053 21475	4.7MΩ 5% 0.5W
3404	4822 116 83872	220Ω 5% 0.5W
3406▲	4822 052 10101	100Ω 5% 0.33W
3407▲	4822 052 10101	100Ω 5% 0.33W
3999	4822 051 30472	4.7Ω 5% 0.062W
3B92	4822 051 30561	560Ω 5% 0.062W
3D00▲	2122 550 00158	VDR 1mA 612V
3D04	4822 116 83872	220Ω 5% 0.5W
3U00▲	4822 052 10478	4.7Ω 5% 0.33W
3U01	4822 051 30101	100Ω 5% 0.062W
3U02	4822 051 30103	10kΩ 5% 0.062W
3U03	4822 117 13632	100kΩ 1% 0603 0.62W
3U04	4822 051 30273	27kΩ 5% 0.062W
3U05	4822 051 30333	33kΩ 5% 0.062W
3U06	4822 051 30103	10kΩ 5% 0.062W
3U07	4822 051 30103	10kΩ 5% 0.062W
3U08	4822 051 30331	330Ω 5% 0.062W
3U09	4822 051 30332	3.3Ω 5% 0.062W
3U10	4822 051 30471	47Ω 5% 0.062W
3U11	4822 051 30471	47Ω 5% 0.062W
3U12	4822 051 30153	15kΩ 5% 0.062W
3U13	4822 051 30103	10kΩ 5% 0.062W
3U14▲	4822 052 10101	100Ω 5% 0.33W
3U15▲	4822 052 10479	47Ω 5% 0.33W

3U16	4822 051 30222	2.2kΩ 5% 0.062W
3U17▲	4822 052 10101	100Ω 5% 0.33W
3U18▲	4822 052 10479	47Ω 5% 0.33W
3U19	4822 051 30222	2.2kΩ 5% 0.062W
3U20	4822 051 30222	2.2kΩ 5% 0.062W
3U21	3198 021 32290	22Ω 5% 0603
3U21	9965 000 23109	22Ω 5% 0603
3U22	4822 051 30331	330Ω 5% 0.062W
3U23	4822 051 30153	15kΩ 5% 0.062W
3U24	2322 704 61803	18kΩ 1% 0603
3U25	3198 021 31820	1.8kΩ 5% 0.062W 0603
3U26	2120 368 90118	Potm. lin. 470Ω hor.
3U27	4822 117 13632	100kΩ 1% 0603 0.62W
3U28	4822 051 30102	1kΩ 5% 0.062W
3U29	4822 051 30222	2.2kΩ 5% 0.062W
3U30	4822 051 30183	18kΩ 5% 0.062W
3U31	4822 051 30223	22kΩ 5% 0.062W
3U32	4822 051 30103	10kΩ 5% 0.062W
3U34	4822 051 30102	1kΩ 5% 0.062W
3U38	4822 051 30333	33kΩ 5% 0.062W
3U39	4822 051 30331	330Ω 5% 0.062W
3U40	3198 021 38220	8.2kΩ 5% 0.062W 0603
3U41	4822 051 30333	33kΩ 5% 0.062W
3U43	4822 051 30109	10Ω 5% 0.062W
3U45	3198 021 32290	22Ω 5% 0603
3U45	9965 000 23109	22Ω 5% 0603
3U46	3198 021 32290	22Ω 5% 0603
3U46	9965 000 23109	22Ω 5% 0603
3U47	4822 051 30479	47Ω 5% 0.062W
3U48	4822 051 30272	2.7kΩ 5% 0.062W
3U50	4822 050 28204	820kΩ 1% 0.6W
3U52	4822 051 30221	220Ω 5% 0.062W
3U53	4822 050 26804	680kΩ 1% 0.6W
3U55	4822 051 30221	220Ω 5% 0.062W
3U56	4822 051 30221	220Ω 5% 0.062W
3U57	4822 051 30221	220Ω 5% 0.062W
3U58▲	4822 053 20565	5.6MΩ 5% 0.25W
3U61	4822 051 30683	68kΩ 5% 0.062W
3U64	4822 051 30103	10kΩ 5% 0.062W
3U65	4822 117 12925	47kΩ 1% 0.063W 0603
3U66	4822 051 30103	10kΩ 5% 0.062W
3U67	4822 051 30101	100Ω 5% 0.062W
3U68	4822 051 30222	2.2kΩ 5% 0.062W
3U70	4822 051 30102	1kΩ 5% 0.062W
3U71	4822 051 30103	10kΩ 5% 0.062W
3U75	4822 051 30102	1kΩ 5% 0.062W
3U89	4822 051 30103	10kΩ 5% 0.062W
9002	4822 051 30008	Jumper 0603
9080	3198 036 90010	Wire 0.58mm
9082	3198 036 90010	Wire 0.58mm
9085	4822 051 30008	Jumper 0603
9088	3198 036 90010	Wire 0.58mm
9089	3198 036 90010	Wire 0.58mm
9090	3198 036 90010	Wire 0.58mm
9091	3198 036 90010	Wire 0.58mm
9092	3198 036 90010	Wire 0.58mm
9093	3198 036 90010	Wire 0.58mm
9094	3198 036 90010	Wire 0.58mm
9095	3198 036 90010	Wire 0.58mm
9096	3198 036 90010	Wire 0.58mm
9097	3198 036 90010	Wire 0.58mm
9098	3198 036 90010	Wire 0.58mm
9099	3198 036 90010	Wire 0.58mm
9H15	3198 036 90010	Wire 0.58mm
9H16	3198 036 90010	Wire 0.58mm
9H17	3198 036 90010	Wire 0.58mm
9U02	4822 051 30008	Jumper 0603
9U09	3198 036 90010	Wire 0.58mm
9U50	3198 036 90010	Wire 0.58mm
9U51	3198 036 90010	Wire 0.58mm
9U52	3198 036 90010	Wire 0.58mm
9U53	3198 036 90010	Wire 0.58mm
9U54	3198 036 90010	Wire 0.58mm
9U55	3198 036 90010	Wire 0.58mm
9U56	3198 036 90010	Wire 0.58mm
9U57	4822 051 30008	Jumper 0603
9U58	3198 036 90010	Wire 0.58mm
9U59	3198 036 90010	Wire 0.58mm
9U60	3198 036 90010	Wire 0.58mm
9U63	3198 036 90010	Wire 0.58mm
9U65	3198 036 90010	Wire 0.58mm
9U66	3198 036 90010	Wire 0.58mm
9U67	3198 036 90010	Wire 0.58mm
9U68	3198 036 90010	Wire 0.58mm
9U69	3198 036 90010	Wire 0.58mm
9U70	3198 036 90010	Wire 0.58mm
9U71	3198 036 90010	Wire 0.58mm
9U72	3198 036 90010	Wire 0.58mm
9U73	3198 036 90010	Wire 0.58mm
9U74	3198 036 90010	Wire 0.58mm
9U76	3198 036 90010	Wire 0.58mm
9U77	3198 036 90010	Wire 0.58mm
9U78	3198 036 90010	Wire 0.58mm
9U79	3198 036 90010	Wire 0.58mm
9U80	3198 036 90010	Wire 0.58mm
9U81	3198 036 90010	Wire 0.58mm
9U82	3198 036 90010	Wire 0.58mm
9U83	3198 036 90010	Wire 0.58mm
9U84	3198 036 90010	Wire 0.58mm
9U85	3198 036 90010	Wire 0.58mm
9U86	3198 036 90010	Wire 0.58mm
9U87	3198 036 90010	Wire 0.58mm
9U88	3198 036 90010	Wire 0.58mm
9U90	3198 036 90010	Wire 0.58mm
9U91	3198 036 90010	Wire 0.58mm

5001	2422 531 02444	S13932-04Y
5002▲	3104 308 21111	BS51312-01
5004	4822 526 10704	Bead 50 Ω at 100MHz
5005	4822 157 11411	Bead 80Ω at 100MHz
5007	4822 526 10704	Bead 50 Ω at 100MHz
5008	4822 157 11411	Bead 80Ω at 100MHz
5009	4822 157 11411	Bead 80Ω at 100MHz
5010	4822 157 11411	Bead 80Ω at 100MHz
5013	4822 157 11411	Bead 80Ω at 100MHz
5015	4822 157 11411	Bead 80Ω at 100MHz
5016	4822 157 11411	Bead 80Ω at 100MHz
5017	4822 526 10704	Bead 50 Ω at 100MHz
5025	4822 157 11411	Bead 80Ω at 100MHz
5026	4822 157 11411	Bead 80Ω at 100MHz
5027	4822 157 11411	Bead 80Ω at 100MHz
5028	4822 157 11411	Bead 80Ω at 100MHz
5040	4822 157 11411	Bead 80Ω at 100MHz
5041	4822 526 10704	Bead 50 Ω at 100MHz
5400▲	2422 549 43286	Filt. DMF2835H*B
5401▲	2422 549 43563	Filt. 23MHz 3A DMF3520
5402▲	2422 549 43563	Filt. 23MHz 3A DMF3520
5B91	2422 536 00776	33µH 10%
5B92	2422 536 00776	33µH 10%
5B93	2422 536 00776	33µH 10%
5D00▲	2422 549 43286	Filt. DMF2835H*B
5D01▲	2422 549 43563	Filt. 23MHz 3A DMF3520
5D02▲	2422 549 43563	Filt. 23MHz 3A DMF3520
5U01	2422 531 02444	S13932-04Y
5U02▲	3104 308 21111	BS51312-01
5U04	4822 526 10704	Bead 50 Ω at 100MHz
5U05	4822 157 11411	Bead 80Ω at 100MHz
5U07	4822 526 10704	Bead 50 Ω at 100MHz
5U08	4822 157 11411	Bead 80Ω at 100MHz
5U09	4822 157 11411	Bead 80Ω at 100MHz
5U10	4822 157 11411	Bead 80Ω at 100MHz
5U13	4822 157 11411	Bead 80Ω at 100MHz
5U15	4822 157 11411	Bead 80Ω at 100MHz
5U16	4822 157 11411	Bead 80Ω at 100MHz
5U17	4822 526 10704	Bead 50 Ω at 100MHz
5U25	4822 157 11411	Bead 80Ω at 100MHz
5U26	4822 157 11411	Bead 80Ω at 100MHz
5U40	4822 157 11411	Bead 80Ω at 100MHz
5U41	4822 526 10704	Bead 50 Ω at 100MHz

6001	4822 130 11397	BAS316
6002	4822 130 11397	BAS316
6003	4822 130 11397	BAS316
6004	4822 130 80622	BAT54
6005	4822 130 80622	BAT54
6006	4822 130 11397	BAS316
6007	4822 130 11397	BAS316
6008	4822 130 11397	BAS316
6009	4822 130 11152	UDZ18B
6010	4822 130 11397	BAS316
6011	4822 130 11397	BAS316
6012	9322 208 80685	BZG05C15
6013	9322 208 80685	BZG05C15
6014	4822 130 11596	BYW29EX-200
6015	9340 548 67115	PDZ22B
6016	4822 130 11397	BAS316
6017	4822 130 11397	BAS316
6020	4822 130 11397	BAS316
6021	9322 192 03687	STPS20H100CFP
6022	4822 130 11148	UDZ4.7B
6023	4822 130 11397	BAS316
6027	4822 130 11397	BAS316
6028	4822 130 11397	BAS316
6044	9322 207 11687	STPS20L45CT
6051	4822 130 11397	BAS316
6077	9322 202 55685	BYG22D
6078	4822 130 10871	SBYV27-200
6078	5322 130 31938	BYV27-200
6079	9322 202 55685	BYG22D
6080	9322 202 55685	BYG22D
6081	9340 548 67115	PDZ22B
6154	9322 099 61685	BYG10J
6155	9322 099 61685	BYG10J
6156	9322 099 61685	BYG10J
6157	9322 099 61685	BYG10J
6158	9322 099 61685	BYG10J
6159	9322 099 61685	BYG10J
6460	4822 130 11397	BAS316
6461	4822 130 11397	BAS316
6506	4822 130 83147	DF06M
6807	9322 199 74682	GBJ6J-B15
6A54	9322 099 61685	BYG10J
6A55	9322 099 61685	BYG10J
6B91	4822 130 11596	BYW29EX-200
6B93	4822 130 11596	BYW29EX-200
6D60	4822 130 11397	BAS316
6D61	4822 130 11397	BAS316
6H07	9322 199 74682	GBJ6J-B15
6U01	4822 130 11397	BAS316
6U02	4822 130 11397	BAS316
6U03	4822 130 11397	BAS316
6U04	4822 130 80622	BAT54
6U05	4822 130 80622	BAT54
6U06	4822 130 11397	BAS316
6U07	4822 130 11397	BAS316
6U08	4822 130 11397	BAS316
6U09	4822 130 11152	UDZ18B
6U10	4822 130 11397	BAS316
6U11	4822 130 11397	BAS316
6U12	9322 208 80685	BZG05C15
6U13	9322 208 80685	BZG05C15
6U15	9340 548 67115	PDZ22B
6U16	4822 130 11397	BAS316
6U17	4822 130 11397	BAS316
6U20	4822 130 11397	BAS316
6U21	9322 192 03687	STPS20H100CFP
6U22	4822 130 11148	UDZ4.7B
6U23	4822 130 11397	BAS316
6U27	4822 130 11397	BAS316
6U28	4822 130 11397	BAS316
6U51	4822 130 11397	BAS316
6U77	9322 202 55685	BYG22D
6U78	4822 130 10871	SBYV27-200
6U78	5322 130 31938	BYV27-200
6U79	9322 202 55685	BYG22D
6U81	9340 548 67115	PDZ22B

7001	9322 108 21682	MC34067P
7002▲	9322 149 04682	TCET1102
7004	3198 010 42310	BC847BW
7005	9322 192 18687	STP15NK50ZFP
7006	9322 192 18687	STP15NK50ZFP
7007	3198 010 42320	BC857BW
7008	3198 010 42320	BC857BW
7009	3198 010 42320	BC857BW
7010	4822 209 16406	TL431ACD
7017	3198 010 42320	BC857BW
7018	3198 010 42310	BC847BW
7030	3198 010 42310	BC847BW
7U01	9322 108 21682	MC34067P
7U02▲	9322 149 04682	TCET1102
7U04	3198 010 42310	BC847BW
7U05	9322 192 18687	STP15NK50ZFP
7U06	9322 192 18687	STP15NK50ZFP
7U07	3198 010 42320	BC857BW
7U08	3198 010 42320	BC857BW
7U09	3198 010 42320	BC857BW
7U10	4822 209 16406	TL431ACD
7U17	3198 010 42320	BC857BW
7U18	3198 010 42310	BC847BW
7U30	3198 010 42310	BC847BW

Small Signal Board [B]

Software (see Philips Service Website)

0802	Downloadable file

Various

1740	4822 267 10565	Connector 4p
1A10	2422 549 44377	Filter 45.75MHz
1G50	2422 025 18427	Connector 31p f
1H00	2422 543 01397	Xtal 27MHz 18pF
1I00	2422 026 05755	Socket Cinch 4p f
1I01	2422 026 05133	Connector SVHS 4p f
1I03	2422 026 05754	Socket Cinch 6p f
1I04	2422 026 05754	Socket Cinch 6p f
1I06	2422 033 00018	Connector 19p f
1J02	4822 267 10636	Conn 13p
1LA0	2422 543 01443	Xtal 16MHz 20pF

1M01	2422 025 10768	Connector 3p m
1M02	4822 267 10618	Connector 7p
1M16	2422 025 18749	Connector 3p m
1M21	2422 025 08149	Connector 6p m
1M36	2422 025 10655	Connector 11p m
1M60	2422 025 09406	Connector 4p m
1P06	2422 025 18772	Connector 30p m
1T01	2422 549 00137	Filter 44MHz
1T04	3112 297 14221	Tuner TD1336O/FGHP
1T04	3112 297 14491	TUNER TD1336/FGHP
1T11	2422 543 01522	Xtal 25.140MHz 20pF
1U01	2422 086 00623	Fuse 3A T 125V

⊣⊢

2A05	2020 552 96618	1nF 10% 50V 0402
2A07	2020 552 96623	2.2nF 10% 50V 0402
2A08	2020 552 96623	2.2nF 10% 50V 0402
2A09	2020 552 96623	2.2nF 10% 50V 0402
2A10	2238 787 15641	22nF 5% 16V 0402
2A11	2238 787 15641	22nF 5% 16V 0402
2A13	2238 787 15641	22nF 5% 16V 0402
2A14	2238 787 15641	22nF 5% 16V 0402
2A15	2238 787 15641	22nF 5% 16V 0402
2A16	2238 787 15641	22nF 5% 16V 0402
2A17	2238 787 15641	22nF 5% 16V 0402
2A18	2238 787 15641	22nF 5% 16V 0402
2A19	2020 552 96628	10nF 10% 16V 0402
2A21	2238 787 15641	22nF 5% 16V 0402
2A23	2020 552 96623	2.2nF 10% 50V 0402
2A24	2238 869 15101	100pF 5% 50V 0402
2A25	2238 869 15101	100pF 5% 50V 0402
2A26	2238 787 15641	22nF 5% 16V 0402
2A27	2238 787 15641	22nF 5% 16V 0402
2A29	2238 586 59812	100nF 20% 50V 0603
2A31	2238 787 15641	22nF 5% 16V 0402
2A32	2238 586 59812	100nF 20% 50V 0603
2A33	2022 552 05679	1µF 10% 16V 0805
2A34	2022 552 05679	1µF 10% 16V 0805
2A35	2238 586 59812	100nF 20% 50V 0603
2A37	4822 124 12108	100µF 20% 4V
2A38	2020 552 96618	1nF 10% 50V 0402
2A39	2238 586 59812	100nF 20% 50V 0603
2A40	2022 552 05679	1µF 10% 16V 0805
2A41	2022 552 05679	1µF 10% 16V 0805
2A42	4822 124 23237	22µF 6.3V
2A43	2238 586 59812	100nF 20% 50V 0603
2A44	2238 586 59812	100nF 20% 50V 0603
2A45	2238 586 59812	100nF 20% 50V 0603
2A47	2238 586 59812	100nF 20% 50V 0603
2A49	2020 552 96628	10nF 10% 16V 0402
2A50	2020 552 96628	10nF 10% 16V 0402
2A51	3198 035 03310	330pF 5% 50V 0402
2A52	2238 586 59812	100nF 20% 50V 0603
2A53	2020 552 96628	10nF 10% 16V 0402
2A54	2020 552 96628	10nF 10% 16V 0402
2A55	2020 552 96628	10nF 10% 16V 0402
2A56	2022 552 05679	1µF 10% 16V 0805
2A57	2022 552 05679	1µF 10% 16V 0805
2A58	2020 552 96628	10nF 10% 16V 0402
2A60	2022 552 05679	1µF 10% 16V 0805
2A61	2022 552 05679	1µF 10% 16V 0805
2A62	2238 586 59812	100nF 20% 50V 0603
2A63	2238 586 59812	100nF 20% 50V 0603
2A64	2238 586 59812	100nF 20% 50V 0603
2A65	2238 586 59812	100nF 20% 50V 0603
2A66	2022 552 05679	1µF 10% 16V 0805
2A67	2022 552 05679	1µF 10% 16V 0805
2A68	2022 552 05679	1µF 10% 16V 0805
2A69	2022 552 05679	1µF 10% 16V 0805
2A71	2022 552 05679	1µF 10% 16V 0805
2A73	2022 552 05679	1µF 10% 16V 0805
2A76	2022 552 05679	1µF 10% 16V 0805
2A78	4822 124 12095	100µF 20% 16V
2A79	4822 126 14324	33pF 5% 50V 0402
2A81	2238 586 59812	100nF 20% 50V 0603
2A83	4822 124 12095	100µF 20% 16V
2A84	4822 126 14324	33pF 5% 50V 0402
2A86	2020 552 96618	1nF 10% 50V 0402
2A87	2022 552 05679	1µF 10% 16V 0805
2A90	3198 035 14720	4.7nF 5% 25V 0402
2A92	2022 552 05679	1µF 10% 16V 0805
2B00	2238 586 59812	100nF 20% 50V 0603
2B01	2238 586 59812	100nF 20% 50V 0603
2B03	3198 035 14720	4.7nF 5% 25V 0402
2B04	2020 552 96628	10nF 10% 16V 0402
2B10	2238 586 59812	100nF 20% 50V 0603
2B11	4822 124 81058	47µF 20% 4V
2B12	2238 586 59812	100nF 20% 50V 0603
2B13	2238 586 59812	100nF 20% 50V 0603
2B14	2238 586 59812	100nF 20% 50V 0603
2B15	2238 586 59812	100nF 20% 50V 0603
2B16	2238 586 59812	100nF 20% 50V 0603
2B17	2238 586 59812	100nF 20% 50V 0603
2B18	2238 586 59812	100nF 20% 50V 0603
2B19	2238 586 59812	100nF 20% 50V 0603
2B20	2238 586 59812	100nF 20% 50V 0603
2B21	2238 586 59812	100nF 20% 50V 0603
2B22	2238 586 59812	100nF 20% 50V 0603
2B23	2238 586 59812	100nF 20% 50V 0603
2B24	2238 586 59812	100nF 20% 50V 0603
2B25	2238 586 59812	100nF 20% 50V 0603
2B26	2238 586 59812	100nF 20% 50V 0603
2B31	2020 552 96628	10nF 10% 16V 0402
2B32	2238 586 59812	100nF 20% 50V 0603
2B33	2238 586 59812	100nF 20% 50V 0603
2B35	2238 586 59812	100nF 20% 50V 0603
2B36	2238 586 59812	100nF 20% 50V 0603
2B37	2238 586 59812	100nF 20% 50V 0603
2B38	2238 586 59812	100nF 20% 50V 0603
2B39	2238 586 59812	100nF 20% 50V 0603
2B40	4822 124 12108	100µF 20% 4V
2B41	4822 124 12108	100µF 20% 4V
2B45	2022 552 05679	1µF 10% 16V 0805
2B46	2022 552 05679	1µF 10% 16V 0805
2B50	2020 552 96628	10nF 10% 16V 0402
2B51	2020 552 96628	10nF 10% 16V 0402
2B52	2020 552 96628	10nF 10% 16V 0402
2B55	2020 552 96628	10nF 10% 16V 0402
2B56	3198 034 01580	1.5pF 1% 50V 0402
2B57	2238 869 15109	10pF 5% 50V 0402
2B58	2020 552 96628	10nF 10% 16V 0402
2B59	3198 034 01580	1.5pF 1% 50V 0402
2B60	2238 869 15109	10pF 5% 50V 0402
2B61	2020 552 96628	10nF 10% 16V 0402
2B62	3198 034 01580	1.5pF 1% 50V 0402
2B63	2238 869 15109	10pF 5% 50V 0402
2B64	2020 552 96628	10nF 10% 16V 0402
2B65	3198 034 01580	1.5pF 1% 50V 0402
2B66	2238 869 15109	10pF 5% 50V 0402
2B67	2020 552 96628	10nF 10% 16V 0402
2B68	3198 034 01580	1.5pF 1% 50V 0402
2B69	2238 869 15109	10pF 5% 50V 0402
2B70	2020 552 96628	10nF 10% 16V 0402
2B71	3198 034 01580	1.5pF 1% 50V 0402
2B72	2238 869 15109	10pF 5% 50V 0402
2B75	2020 552 96628	10nF 10% 16V 0402
2B76	2020 552 96628	10nF 10% 16V 0402
2B77	2020 552 96628	10nF 10% 16V 0402
2B78	2020 552 96628	10nF 10% 16V 0402
2B79	2020 552 96628	10nF 10% 16V 0402
2B80	2020 552 96628	10nF 10% 16V 0402
2D01	2020 552 96637	10µF 10% 6.3V 0805
2D02	2020 552 96637	10µF 10% 6.3V 0805
2D03	3198 035 02210	220pF 5% 50V 0402
2D11	2022 552 05615	2.2µF 10% 6.3V 0805
2D14	2222 580 15649	100nF 10% 50V 0805
2D15	4822 124 12095	100µF 20% 16V
2D17	2222 580 15649	100nF 10% 50V 0805
2D18	4822 124 12095	100µF 20% 16V
2D19	2222 580 15649	100nF 10% 50V 0805
2D20	2222 580 15649	100nF 10% 50V 0805
2D21	2222 580 15649	100nF 10% 50V 0805
2D22	2020 021 00215	220µF 20% 25V
2D23	2020 021 00215	220µF 20% 25V
2D26	2222 780 15663	1µF 10% 0805
2D27	2222 780 15663	1µF 10% 0805
2D28	2020 021 00215	220µF 20% 25V
2D30	2238 787 15641	22nF 5% 16V 0402
2D30	4822 117 13605	Jumper 0402
2D31	2238 787 15641	22nF 5% 16V 0402
2D31	4822 117 13605	Jumper 0402
2D32	2020 552 96621	1.5nF 10% 50V 0402
2D35	2020 552 96621	1.5nF 10% 50V 0402
2D36	2020 552 96621	1.5nF 10% 50V 0402
2D37	2020 552 96621	1.5nF 10% 50V 0402
2D38	2222 580 15649	100nF 10% 50V 0805
2D39	2020 552 96621	1.5nF 10% 50V 0402
2D40	2020 552 96621	1.5nF 10% 50V 0402
2D41	2222 580 15649	100nF 10% 50V 0805
2D42	4822 124 12095	100µF 20% 16V
2D43	2222 580 15649	100nF 10% 50V 0805
2D44	4822 124 12095	100µF 20% 16V
2D45	2222 580 15649	100nF 10% 50V 0805
2D45	2222 780 15663	1µF 10% 0805
2D46	2222 580 15649	100nF 10% 50V 0805
2D46	2222 780 15663	1µF 10% 0805
2D47	2020 552 96621	1.5nF 10% 50V 0402
2D48	2020 552 96621	1.5nF 10% 50V 0402
2D48	2020 552 96623	2.2nF 10% 50V 0402
2D49	2020 552 96621	1.5nF 10% 50V 0402
2D50	2020 552 96621	1.5nF 10% 50V 0402
2D50	2020 552 96623	2.2nF 10% 50V 0402
2D51	2020 552 96618	1nF 10% 50V 0402
2D52	2020 021 00215	220µF 20% 25V
2D53	2020 552 96684	470nF 10% 25V 0805
2D54	2020 552 96684	470nF 10% 25V 0805
2D55	2020 552 96621	1.5nF 10% 50V 0402
2D56	2020 552 96623	2.2nF 10% 50V 0402
2D57	2020 552 96623	2.2nF 10% 50V 0402
2D58	2020 552 96623	2.2nF 10% 50V 0402
2D59	2020 552 96623	2.2nF 10% 50V 0402
2D63	2238 787 15641	22nF 5% 16V 0402
2D64	3198 034 02280	2.2pF 1% 50V 0402
2D65	3198 034 02280	2.2pF 1% 50V 0402
2D66	3198 034 02280	2.2pF 1% 50V 0402
2D67	2238 586 59812	100nF 20% 50V 0603
2D68	2238 586 59812	100nF 20% 50V 0603
2D71	3198 034 04780	4.7pF 50V NP0 0402
2D72	3198 034 04780	4.7pF 50V NP0 0402
2G35	2238 586 59812	100nF 20% 50V 0603
2H00	2238 869 15101	100pF 5% 50V 0402
2H01	2020 552 96618	1nF 10% 50V 0402
2H02	2238 586 59812	100nF 20% 50V 0603
2H03	2222 780 15663	1µF 10% 0805
2H06	2020 552 96618	1nF 10% 50V 0402
2H07	2020 552 96618	1nF 10% 50V 0402
2H08	3198 034 02790	47pF 1% 50V 0402
2H09	3198 034 02790	47pF 1% 50V 0402
2H10	2238 586 59812	100nF 20% 50V 0603
2H11	2238 869 15101	100pF 5% 50V 0402
2H12	2222 780 15663	1µF 10% 0805
2I02	2238 869 15101	100pF 5% 50V 0402
2I03	2238 869 15101	100pF 5% 50V 0402
2I05	2238 869 15101	100pF 5% 50V 0402
2I06	2238 869 15101	100pF 5% 50V 0402
2I07	2238 869 15101	100pF 5% 50V 0402
2I08	2238 869 15101	100pF 5% 50V 0402
2I09	4822 126 14324	33pF 5% 50V 0402
2I0E	2238 869 15101	100pF 5% 50V 0402
2I0F	2238 869 15101	100pF 5% 50V 0402
2I10	2238 869 15101	100pF 5% 50V 0402
2I11	2238 869 15101	100pF 5% 50V 0402
2I12	2238 869 15101	100pF 5% 50V 0402
2I13	2238 869 15101	100pF 5% 50V 0402
2I14	2238 869 15101	100pF 5% 50V 0402
2I15	2238 869 15101	100pF 5% 50V 0402
2I16	2238 869 15101	100pF 5% 50V 0402
2I17	2238 869 15101	100pF 5% 50V 0402
2I18	2238 869 15101	100pF 5% 50V 0402
2I19	2238 869 15101	100pF 5% 50V 0402
2I20	2238 869 15101	100pF 5% 50V 0402
2I21	2238 869 15101	100pF 5% 50V 0402
2I22	2238 869 15101	100pF 5% 50V 0402
2I23	2238 869 15101	100pF 5% 50V 0402
2I24	2238 869 15101	100pF 5% 50V 0402
2I25	2238 869 15101	100pF 5% 50V 0402
2I53	2238 586 59812	100nF 20% 50V 0603
2J01	2238 586 59812	100nF 20% 50V 0603
2J03	2238 586 59812	100nF 20% 50V 0603
2J06	2238 586 59812	100nF 20% 50V 0603
2J08	2238 586 59812	100nF 20% 50V 0603
2J10	2238 586 59812	100nF 20% 50V 0603
2J13	2238 586 59812	100nF 20% 50V 0603
2J16	2238 586 59812	100nF 20% 50V 0603
2J18	2238 586 59812	100nF 20% 50V 0603
2J20	2238 586 59812	100nF 20% 50V 0603
2J57	2238 586 59812	100nF 20% 50V 0603
2J76	2022 552 05679	1µF 10% 16V 0805
2J77	2238 869 15101	100pF 5% 50V 0402
2L01	2020 552 96618	1nF 10% 50V 0402
2L06	2022 552 05679	1µF 10% 16V 0805
2L07	2238 586 59812	100nF 20% 50V 0603
2L08	2238 586 59812	100nF 20% 50V 0603
2L50	2238 586 59812	100nF 20% 50V 0603
2L51	2238 586 59812	100nF 20% 50V 0603
2L52	2238 586 59812	100nF 20% 50V 0603
2L53	2238 586 59812	100nF 20% 50V 0603
2L54	2238 586 59812	100nF 20% 50V 0603
2L55	2020 552 96618	1nF 10% 50V 0402
2L56	2238 586 59812	100nF 20% 50V 0603
2L57	2238 586 59812	100nF 20% 50V 0603
2L58	2238 586 59812	100nF 20% 50V 0603
2L59	2020 552 96618	1nF 10% 50V 0402
2L60	2238 586 59812	100nF 20% 50V 0603
2L61	2020 552 96618	1nF 10% 50V 0402
2L62	2020 552 96618	1nF 10% 50V 0402
2L63	2238 869 15101	100pF 5% 50V 0402
2L64	2020 552 96618	1nF 10% 50V 0402
2L65	3198 035 03320	3.3nF 5% 50V 0402
2L66	3198 035 03320	3.3nF 5% 50V 0402
2L80	2022 552 05615	2.2µF 10% 6.3V 0805
2L81	2022 552 05615	2.2µF 10% 6.3V 0805
2L82	2022 552 05615	2.2µF 10% 6.3V 0805
2L83	2022 552 05615	2.2µF 10% 6.3V 0805
2L84	2238 586 59812	100nF 20% 50V 0603
2L85	2238 586 59812	100nF 20% 50V 0603
2L86	2238 586 59812	100nF 20% 50V 0603
2L87	2238 586 59812	100nF 20% 50V 0603
2L88	2238 869 15101	100pF 5% 50V 0402
2L89	2020 552 96618	1nF 10% 50V 0402

2L90	2020 552 96618	1nF 10% 50V 0402
2L91	2020 552 96618	1nF 10% 50V 0402
2L92	2020 552 96618	1nF 10% 50V 0402
2LA0	4822 126 14519	22pF 5% 50V 0402
2LA1	4822 126 14519	22pF 5% 50V 0402
2LA2	2238 869 15109	10pF 5% 50V 0402
2LA4	2238 586 59812	100nF 20% 50V 0603
2LA5	3198 035 03320	3.3nF 5% 50V 0402
2LA6	3198 035 03320	3.3nF 5% 50V 0402
2LA8	3198 035 03320	3.3nF 5% 50V 0402
2LA9	3198 035 03320	3.3nF 5% 50V 0402
2LB0	2238 586 59812	100nF 20% 50V 0603
2LB1	2238 586 59812	100nF 20% 50V 0603
2LB3	2020 552 96618	1nF 10% 50V 0402
2LB4	2238 586 59812	100nF 20% 50V 0603
2LN2	4822 124 81058	47µF 20% 4V
2LN3	2238 586 59812	100nF 20% 50V 0603
2LN4	2238 586 59812	100nF 20% 50V 0603
2LN5	2238 586 59812	100nF 20% 50V 0603
2LN6	2238 586 59812	100nF 20% 50V 0603
2LN7	2238 586 59812	100nF 20% 50V 0603
2LN8	2238 586 59812	100nF 20% 50V 0603
2LP0	4822 124 12108	100µF 20% 4V
2LP2	2238 586 59812	100nF 20% 50V 0603
2LP3	2238 586 59812	100nF 20% 50V 0603
2LP4	2238 586 59812	100nF 20% 50V 0603
2LP7	4822 124 12108	100µF 20% 4V
2LP8	2238 586 59812	100nF 20% 50V 0603
2LP9	2238 586 59812	100nF 20% 50V 0603
2LR0	2238 586 59812	100nF 20% 50V 0603
2LR2	2238 586 59812	100nF 20% 50V 0603
2LR4	2238 586 59812	100nF 20% 50V 0603
2LR5	2238 586 59812	100nF 20% 50V 0603
2LR6	2238 586 59812	100nF 20% 50V 0603
2LR8	2238 586 59812	100nF 20% 50V 0603
2LR9	2238 586 59812	100nF 20% 50V 0603
2LS5	2238 586 59812	100nF 20% 50V 0603
2LT0	2022 552 05679	1µF 10% 16V 0805
2M10	2020 552 96618	1nF 10% 50V 0402
2M11	2020 552 96618	1nF 10% 50V 0402
2M12	2020 552 96618	1nF 10% 50V 0402
2M13	2020 552 96618	1nF 10% 50V 0402
2M14	2020 552 96618	1nF 10% 50V 0402
2M15	2020 552 96623	2.2nF 10% 50V 0402
2M16	2020 552 96623	2.2nF 10% 50V 0402
2M17	2020 552 96623	2.2nF 10% 50V 0402
2M18	2020 552 96623	2.2nF 10% 50V 0402
2M19	2020 552 96618	1nF 10% 50V 0402
2M80	2238 586 59812	100nF 20% 50V 0603
2M81	2238 869 15101	100pF 5% 50V 0402
2M81	4822 117 13548	1kΩ 5% 0402
2M82	2238 869 15101	100pF 5% 50V 0402
2M83	2238 869 15101	100pF 5% 50V 0402
2M84	2238 869 15101	100pF 5% 50V 0402
2M85	2238 869 15101	100pF 5% 50V 0402
2M86	2238 787 15641	22nF 5% 16V 0402
2M87	2238 869 15101	100pF 5% 50V 0402
2M91	2020 552 96628	10nF 10% 16V 0402
2M92	2022 552 05679	1µF 10% 16V 0805
2M93	2020 552 96628	10nF 10% 16V 0402
2M94	2022 552 05679	1µF 10% 16V 0805
2P34	2238 586 59812	100nF 20% 50V 0603
2P35	2238 586 59812	100nF 20% 50V 0603
2P80	2238 586 59812	100nF 20% 50V 0603
2P81	2238 586 59812	100nF 20% 50V 0603
2Q01	2222 780 15663	1µF 10% 0805
2Q03	2222 780 15663	1µF 10% 0805
2Q04	2238 586 59812	100nF 20% 50V 0603
2Q05	2238 586 59812	100nF 20% 50V 0603
2Q06	2238 586 59812	100nF 20% 50V 0603
2Q07	2238 586 59812	100nF 20% 50V 0603
2Q08	2238 586 59812	100nF 20% 50V 0603
2Q09	2238 586 59812	100nF 20% 50V 0603
2Q10	2238 586 59812	100nF 20% 50V 0603
2Q11	2238 586 59812	100nF 20% 50V 0603
2Q12	2238 586 59812	100nF 20% 50V 0603
2Q13	2238 586 59812	100nF 20% 50V 0603
2Q14	2238 586 59812	100nF 20% 50V 0603
2Q15	2238 586 59812	100nF 20% 50V 0603
2Q16	2020 552 96628	10nF 10% 16V 0402
2Q17	2020 552 96628	10nF 10% 16V 0402
2Q18	2020 552 96628	10nF 10% 16V 0402
2Q19	2020 552 96628	10nF 10% 16V 0402
2Q20	2020 552 00141	4.7µF 10% 6.3V 0805
2Q21	2222 780 15663	1µF 10% 0805
2Q22	2020 552 00141	4.7µF 10% 6.3V 0805
2Q23	2222 780 15663	1µF 10% 0805
2Q24	2238 586 59812	100nF 20% 50V 0603
2Q26	2238 586 59812	100nF 20% 50V 0603
2Q27	2238 586 59812	100nF 20% 50V 0603
2Q28	2238 586 59812	100nF 20% 50V 0603
2Q30	2238 586 59812	100nF 20% 50V 0603
2Q32	2238 586 59812	100nF 20% 50V 0603
2Q33	2238 586 59812	100nF 20% 50V 0603
2Q34	2238 586 59812	100nF 20% 50V 0603
2Q35	2238 586 59812	100nF 20% 50V 0603
2Q37	2238 586 59812	100nF 20% 50V 0603
2Q38	2238 586 59812	100nF 20% 50V 0603
2Q39	2238 586 59812	100nF 20% 50V 0603
2Q42	2020 552 00141	4.7µF 10% 6.3V 0805
2Q44	2238 586 59812	100nF 20% 50V 0603
2Q45	2238 586 59812	100nF 20% 50V 0603
2Q46	2238 586 59812	100nF 20% 50V 0603
2Q47	2238 586 59812	100nF 20% 50V 0603
2Q48	2238 586 59812	100nF 20% 50V 0603
2Q49	2238 586 59812	100nF 20% 50V 0603
2Q50	2238 586 59812	100nF 20% 50V 0603
2Q51	2238 586 59812	100nF 20% 50V 0603
2Q52	2238 586 59812	100nF 20% 50V 0603
2Q53	2238 586 59812	100nF 20% 50V 0603
2Q54	2238 586 59812	100nF 20% 50V 0603
2Q55	2238 586 59812	100nF 20% 50V 0603
2Q56	2020 552 96628	10nF 10% 16V 0402
2Q57	2020 552 96628	10nF 10% 16V 0402
2Q58	2020 552 96628	10nF 10% 16V 0402
2Q59	2020 552 96628	10nF 10% 16V 0402
2Q60	2238 586 59812	100nF 20% 50V 0603
2Q61	2020 552 96618	1nF 10% 50V 0402
2Q62	2238 869 15101	100pF 5% 50V 0402
2Q63	2238 586 59812	100nF 20% 50V 0603
2Q64	2238 586 59812	100nF 20% 50V 0603
2Q65	2238 586 59812	100nF 20% 50V 0603
2Q66	2238 586 59812	100nF 20% 50V 0603
2Q67	2020 552 96618	1nF 10% 50V 0402
2Q69	2020 012 00028	470µF 20% 16V
2Q70	2238 869 15101	100pF 5% 50V 0402
2Q71	2238 869 15101	100pF 5% 50V 0402
2Q76	2020 552 96618	1nF 10% 50V 0402
2Q77	2020 552 96618	1nF 10% 50V 0402
2Q82	2020 552 00141	4.7µF 10% 6.3V 0805
2Q83	2020 552 00141	4.7µF 10% 6.3V 0805
2Q84	2020 552 96628	10nF 10% 16V 0402
2Q85	2020 552 96628	10nF 10% 16V 0402
2Q86	2020 552 96628	10nF 10% 16V 0402
2Q87	2020 552 96618	1nF 10% 50V 0402
2Q88	2020 552 96618	1nF 10% 50V 0402
2Q89	2020 552 96618	1nF 10% 50V 0402
2Q90	2020 552 96618	1nF 10% 50V 0402
2Q91	2020 552 96628	10nF 10% 16V 0402
2T10	2020 552 96628	10nF 10% 16V 0402
2T11	2020 552 96628	10nF 10% 16V 0402
2T12	2020 552 96628	10nF 10% 16V 0402
2T13	2020 552 96628	10nF 10% 16V 0402
2T14	2020 552 96628	10nF 10% 16V 0402
2T15	2020 552 96628	10nF 10% 16V 0402
2T16	2022 552 05679	1µF 10% 16V 0805
2T17	2020 552 96628	10nF 10% 16V 0402
2T18	2020 552 96628	10nF 10% 16V 0402
2T19	2020 552 96628	10nF 10% 16V 0402
2T20	2020 552 96628	10nF 10% 16V 0402
2T21	2020 552 96628	10nF 10% 16V 0402
2T22	2020 552 96628	10nF 10% 16V 0402
2T23	2238 586 59812	100nF 20% 50V 0603
2T24	2022 552 05679	1µF 10% 16V 0805
2T25	2020 552 96628	10nF 10% 16V 0402
2T26	3198 034 01510	150pF 1% 50V 0402
2T27	3198 034 01510	150pF 1% 50V 0402
2T30	2020 552 96628	10nF 10% 16V 0402
2T31	2020 552 96628	10nF 10% 16V 0402
2T33	2020 552 96628	10nF 10% 16V 0402
2T34	2020 552 96628	10nF 10% 16V 0402
2T35	2020 552 96628	10nF 10% 16V 0402
2T36	2238 586 59812	100nF 20% 50V 0603
2T37	2238 586 59812	100nF 20% 50V 0603
2T38	2238 586 59812	100nF 20% 50V 0603
2T39	2238 586 59812	100nF 20% 50V 0603
2T40	2238 586 59812	100nF 20% 50V 0603
2T41	2238 586 59812	100nF 20% 50V 0603
2T42	2238 586 59812	100nF 20% 50V 0603
2T43	2238 586 59812	100nF 20% 50V 0603
2T44	2238 586 59812	100nF 20% 50V 0603
2T45	2238 586 59812	100nF 20% 50V 0603
2T46	2238 586 59812	100nF 20% 50V 0603
2T47	2238 586 59812	100nF 20% 50V 0603
2T48	2238 586 59812	100nF 20% 50V 0603
2T49	2238 586 59812	100nF 20% 50V 0603
2T50	2238 586 59812	100nF 20% 50V 0603
2T53	4822 126 14324	33pF 5% 50V 0402
2T54	4822 126 14324	33pF 5% 50V 0402
2T56	2020 552 96628	10nF 10% 16V 0402
2T57	2022 552 05679	1µF 10% 16V 0805
2T58	2020 552 96628	10nF 10% 16V 0402
2T59	2022 552 05679	1µF 10% 16V 0805
2T60	2238 586 59812	100nF 20% 50V 0603
2T61	2238 586 59812	100nF 20% 50V 0603
2T62	2022 552 05679	1µF 10% 16V 0805
2T63	2020 552 96628	10nF 10% 16V 0402
2T64	2238 586 59812	100nF 20% 50V 0603
2T65	4822 126 14524	68pF 5% 50V 0402
2T66	4822 126 14524	68pF 5% 50V 0402
2U09	2238 869 15101	100pF 5% 50V 0402
2U10	2238 586 59812	100nF 20% 50V 0603
2U11	2022 552 05679	1µF 10% 16V 0805
2U12	2238 586 59812	100nF 20% 50V 0603
2U13	2238 586 59812	100nF 20% 50V 0603
2U14	2238 586 59812	100nF 20% 50V 0603
2U15	2238 586 59812	100nF 20% 50V 0603
2U16	2022 552 05679	1µF 10% 16V 0805
2U17	2022 552 05635	22µF 10% 16V
2U18	2238 586 59812	100nF 20% 50V 0603
2U19	2238 586 59812	100nF 20% 50V 0603
2U20	2238 586 59812	100nF 20% 50V 0603
2U21	3198 035 03320	3.3nF 5% 50V 0402
2U22	2020 552 00207	100µF 20% 6V3 1812
2U23	2238 869 15101	100pF 5% 50V 0402
2U24	2022 552 05635	22µF 10% 16V
2U25	2022 552 05635	22µF 10% 16V
2U26	2238 586 59812	100nF 20% 50V 0603
2U27	2020 552 96618	1nF 10% 50V 0402
2U28	2020 552 96618	1nF 10% 50V 0402
2U29	2020 552 96618	1nF 10% 50V 0402
2U30	2020 552 96618	1nF 10% 50V 0402
2U31	3198 035 03320	3.3nF 5% 50V 0402
2U32	3198 035 03320	3.3nF 5% 50V 0402
2U37	2020 552 96684	470nF 10% 25V 0805
2U40	2022 552 05679	1µF 10% 16V 0805
2U41	2022 552 05679	1µF 10% 16V 0805
2U46	2022 552 05679	1µF 10% 16V 0805
2U55	2238 586 59812	100nF 20% 50V 0603
2U58	2022 552 05679	1µF 10% 16V 0805
2U61	2022 552 05679	1µF 10% 16V 0805
2U73	2238 787 15641	22nF 5% 16V 0402
2U85	3198 035 03320	3.3nF 5% 50V 0402
2V00	2020 552 96618	1nF 10% 50V 0402
2V01	2020 552 96618	1nF 10% 50V 0402
2V02	2020 552 96618	1nF 10% 50V 0402
2V16	2238 586 59812	100nF 20% 50V 0603
2V17	2238 586 59812	100nF 20% 50V 0603
2V18	2238 586 59812	100nF 20% 50V 0603
2V19	2238 586 59812	100nF 20% 50V 0603
2V20	2238 586 59812	100nF 20% 50V 0603
2V21	2238 586 59812	100nF 20% 50V 0603
2V22	2238 586 59812	100nF 20% 50V 0603
2V23	2238 586 59812	100nF 20% 50V 0603
2V24	2238 586 59812	100nF 20% 50V 0603
2V25	2238 586 59812	100nF 20% 50V 0603
2V26	2238 586 59812	100nF 20% 50V 0603
2V27	2238 586 59812	100nF 20% 50V 0603
2V28	2238 586 59812	100nF 20% 50V 0603
2V29	2238 586 59812	100nF 20% 50V 0603
2V30	2238 586 59812	100nF 20% 50V 0603
2V31	2238 586 59812	100nF 20% 50V 0603
2V35	4822 124 81058	47µF 20% 4V
2V36	2238 869 15101	100pF 5% 50V 0402
2V37	2238 869 15101	100pF 5% 50V 0402
2V38	2238 869 15101	100pF 5% 50V 0402
2V39	2238 869 15101	100pF 5% 50V 0402
2V40	2238 869 15101	100pF 5% 50V 0402
2V41	2238 869 15101	100pF 5% 50V 0402
2V42	2238 869 15101	100pF 5% 50V 0402
2V43	2238 869 15101	100pF 5% 50V 0402
2V44	2238 869 15101	100pF 5% 50V 0402
2V45	2238 869 15101	100pF 5% 50V 0402

–WW–

3A08	3198 031 01830	18kΩ 5% 0.01W 0402
3A10	2322 706 75601	560Ω 1% 0402
3A11	3198 031 01220	1.2kΩ 5% 0.01W 0402
3A12	3198 031 01220	1.2kΩ 5% 0.01W 0402
3A13	3198 031 04730	47Ω 5% 0402
3A14	4822 117 13545	100Ω 1% 0402
3A15	4822 117 13545	100Ω 1% 0402
3A17	4822 117 13545	100Ω 1% 0402
3A18	3198 031 01810	180Ω 5% 0402
3A19	3198 031 01810	180Ω 5% 0402
3A20	3198 031 03910	390Ω 1% 0402
3A21	4822 117 13543	470Ω 5% 0402
3A23	4822 117 11297	100kΩ 5% 0.1W
3A24	4822 117 13606	10kΩ 5% 0.01W 0402
3A25	3198 031 06840	680kΩ 5% 0.01W 0402
3A26	3198 031 04730	47Ω 5% 0402
3A27	3198 031 03390	33Ω 1% 0402
3A28	3198 031 03390	33Ω 1% 0402
3A29	4822 117 13548	1kΩ 5% 0402
3A30	3198 031 01530	15kΩ 5% 0.01W 0402
3A33	3198 031 03390	33Ω 1% 0402
3A34	3198 031 03390	33Ω 1% 0402
3A35	4822 117 13548	1kΩ 5% 0402
3A36	3198 031 01530	15kΩ 5% 0.01W 0402
3A39	4822 051 30689	68Ω 5% 0.063W 0603

3A41	4822 117 13548	1kΩ 5% 0402
3A42	4822 117 13606	10kΩ 5% 0.01W 0402
3A43	4822 117 13606	10kΩ 5% 0.01W 0402
3A44	4822 117 13606	10kΩ 5% 0.01W 0402
3A51	3198 031 02730	27kΩ 5% 0402
3A52	3198 031 02730	27kΩ 5% 0402
3A60	4822 117 13543	470Ω 5% 0402
3A61	4822 117 13543	470Ω 5% 0402
3A62	4822 117 13545	100Ω 1% 0402
3A63	4822 117 13545	100Ω 1% 0402
3B02	4822 117 13545	100Ω 1% 0402
3B03	4822 117 13545	100Ω 1% 0402
3B04	4822 117 13606	10kΩ 5% 0.01W 0402
3B05	3198 031 04730	47Ω 5% 0402
3B06	3198 031 04730	47Ω 5% 0402
3B07	4822 117 13545	100Ω 1% 0402
3B08	4822 117 13545	100Ω 1% 0402
3B17	3198 031 02290	22Ω 5% 0.1W 0402
3B18	4822 117 13606	10kΩ 5% 0.01W 0402
3B19	4822 117 13548	1kΩ 5% 0402
3B20	4822 117 11297	100kΩ 5% 0.1W
3B50	4822 117 13597	330Ω 5% 0.01W 0402
3B51	4822 117 13597	330Ω 5% 0.01W 0402
3B52	4822 117 13597	330Ω 5% 0.01W 0402
3B53	4822 117 13548	1kΩ 5% 0402
3B54	3198 031 01230	12kΩ 5% 0402
3B56	2350 033 11339	4 x 33Ω 5%
3B57	2350 033 11339	4 x 33Ω 5%
3B58	2350 033 11339	4 x 33Ω 5%
3B59	2350 033 11339	4 x 33Ω 5%
3B60	4822 117 13545	100Ω 1% 0402
3B61	4822 117 13545	100Ω 1% 0402
3B62	2350 033 11339	4 x 33Ω 5%
3B65	4822 117 13543	470Ω 5% 0402
3B66	4822 117 13548	1kΩ 5% 0402
3B67	4822 117 13543	470Ω 5% 0402
3B68	4822 117 13548	1kΩ 5% 0402
3B69	4822 117 13543	470Ω 5% 0402
3B70	4822 117 13548	1kΩ 5% 0402
3B71	4822 117 13543	470Ω 5% 0402
3B72	4822 117 13548	1kΩ 5% 0402
3B73	4822 117 13543	470Ω 5% 0402
3B74	4822 117 13548	1kΩ 5% 0402
3B75	4822 117 13543	470Ω 5% 0402
3B76	4822 117 13548	1kΩ 5% 0402
3B80	4822 117 13548	1kΩ 5% 0402
3B81	4822 117 13606	10kΩ 5% 0.01W 0402
3B82	4822 117 13548	1kΩ 5% 0402
3B83	4822 117 13606	10kΩ 5% 0.01W 0402
3B84	3198 031 01590	15Ω 5% 0402
3B86	3198 031 03390	33Ω 1% 0402
3B87	3198 031 03390	33Ω 1% 0402
3B88	3198 031 03390	33Ω 1% 0402
3B89	3198 031 02290	22Ω 5% 0.1W 0402
3D01	4822 117 11297	100kΩ 5% 0.1W
3D10	3198 031 04730	47Ω 5% 0402
3D12	3198 031 05620	5.6kΩ 5% 0.01W 0402
3D12	4822 117 13601	22kΩ 5% 0402
3D13	3198 031 02720	2.7kΩ 5% 0.01W 0402
3D14	3198 031 02240	220kΩ 5% 0.1W 0402
3D15	3198 031 04740	470kΩ 5% 0402
3D16	4822 117 13602	2.2kΩ 5% 0.01W 0402
3D17	3198 031 02240	220kΩ 5% 0.1W 0402
3D18	3198 031 04730	47Ω 5% 0402
3D20	4822 117 13601	22kΩ 5% 0402
3D21	3198 031 02720	2.7kΩ 5% 0.01W 0402
3D22	4822 117 13606	10kΩ 5% 0.01W 0402
3D23	4822 117 13602	2.2kΩ 5% 0.01W 0402
3D24	4822 117 13606	10kΩ 5% 0.01W 0402
3D25	4822 117 13548	1kΩ 5% 0402
3D25	4822 117 13602	2.2kΩ 5% 0.01W 0402
3D26	4822 117 13602	2.2kΩ 5% 0.01W 0402
3D34	2322 762 60332	3.3kΩ 5% 2512
3D35	3198 031 01220	1.2kΩ 5% 0.01W 0402
3D35	4822 117 13548	1kΩ 5% 0402
3D37	2322 762 60332	3.3kΩ 5% 2512
3D38	3198 031 01220	1.2kΩ 5% 0.01W 0402
3D38	4822 117 13548	1kΩ 5% 0402
3D39	2350 033 11223	22kΩ 5%
3D40	2350 033 11223	22kΩ 5%
3D42	3198 031 04730	47Ω 5% 0402
3D43	5322 117 11726	10Ω 5%
3D44	2322 762 60331	330Ω 5% 2512
3D45	2322 762 60331	330Ω 5% 2512
3D46	3198 031 04780	4.7Ω 5% 0402
3D47	3198 031 04780	4.7Ω 5% 0402
3D49	3198 031 01530	15kΩ 5% 0.01W 0402
3D50	3198 031 03920	3.9kΩ 5% 0402
3D50	4822 117 13606	10kΩ 5% 0.01W 0402
3D51	3198 031 03920	3.9kΩ 5% 0402
3D51	4822 117 13606	10kΩ 5% 0.01W 0402
3D54	3198 031 04730	47Ω 5% 0402
3D56	3198 031 01530	15kΩ 5% 0.01W 0402
3D57	3198 031 01530	15kΩ 5% 0.01W 0402
3D58	3198 031 06810	680Ω 5% 0.01W 0402
3D64	3198 031 01220	1.2kΩ 5% 0.01W 0402
3D64	4822 117 13548	1kΩ 5% 0402
3D65	3198 031 01220	1.2kΩ 5% 0.01W 0402
3D65	4822 117 13548	1kΩ 5% 0402
3D67	3198 031 03920	3.9kΩ 5% 0402
3D68	4822 117 11297	100kΩ 5% 0.1W
3D69	3198 031 03920	3.9kΩ 5% 0402
3D70	4822 117 11297	100kΩ 5% 0.1W
3D71	4822 117 13606	10kΩ 5% 0.01W 0402
3D72	4822 117 13606	10kΩ 5% 0.01W 0402
3D73	3198 031 05610	560Ω 5% 0.01W 0402
3D74	3198 031 05610	560Ω 5% 0.01W 0402
3D75	4822 117 13603	33kΩ 5% 0402
3D76	4822 117 13601	22kΩ 5% 0402
3D78	4822 117 13601	22kΩ 5% 0402
3D79	4822 117 13601	22kΩ 5% 0402
3D81	3198 031 06810	680Ω 5% 0.01W 0402
3D82	3198 031 04730	47Ω 5% 0402
3D83	3198 031 04730	47Ω 5% 0402
3D84	3198 031 04730	47Ω 5% 0402
3D85	3198 031 04730	47Ω 5% 0402
3D86	4822 117 11297	100kΩ 5% 0.1W
3D87	3198 031 04730	47Ω 5% 0402
3D88	4822 117 13603	33kΩ 5% 0402
3D89	4822 117 13601	22kΩ 5% 0402
3D91	4822 117 13603	33kΩ 5% 0402
3D91	4822 117 13605	Jumper 0402
3H02	3198 031 06890	68Ω 5% 0402
3H04	3198 031 01820	1.8kΩ 5% 0.01W 0402
3H05	3198 031 01820	1.8kΩ 5% 0.01W 0402
3H06	3198 031 02290	22Ω 5% 0.1W 0402
3H07	3198 031 02290	22Ω 5% 0.1W 0402
3H08	3198 031 04720	4.7kΩ 5% 0402
3H10	3198 031 04720	4.7kΩ 5% 0402
3H11	3198 031 04720	4.7kΩ 5% 0402
3H16	3198 031 04720	4.7kΩ 5% 0402
3H17	3198 031 04720	4.7kΩ 5% 0402
3H18	3198 031 04720	4.7kΩ 5% 0402
3H22	3198 031 04720	4.7kΩ 5% 0402
3H23	3198 031 04720	4.7kΩ 5% 0402
3H25	4822 117 13545	100Ω 1% 0402
3H28	3198 031 04720	4.7kΩ 5% 0402
3H31	3198 031 04720	4.7kΩ 5% 0402
3H32	3198 031 04720	4.7kΩ 5% 0402
3H40	3198 031 04720	4.7kΩ 5% 0402
3H41	3198 031 04720	4.7kΩ 5% 0402
3H50	2322 706 76801	680Ω 1% 0402
3H51	2322 706 73301	330Ω 1% 0402
3H52	2322 706 75601	560Ω 1% 0402
3H53	2322 706 75601	560Ω 1% 0402
3H54	4822 117 13606	10kΩ 5% 0.01W 0402
3H55	4822 117 13606	10kΩ 5% 0.01W 0402
3H56	4822 117 13606	10kΩ 5% 0.01W 0402
3H57	4822 117 13606	10kΩ 5% 0.01W 0402
3H69	4822 117 13606	10kΩ 5% 0.01W 0402
3H70	3198 031 04720	4.7kΩ 5% 0402
3H71	3198 031 04720	4.7kΩ 5% 0402
3H72	4822 117 13545	100Ω 1% 0402
3H73	3198 031 02290	22Ω 5% 0.1W 0402
3H74	3198 031 06890	68Ω 5% 0402
3H75	4822 117 13545	100Ω 1% 0402
3H79	3198 031 02290	22Ω 5% 0.1W 0402
3H80	2350 033 11472	4x 4.7kΩ 5%
3H81	2350 033 11472	4x 4.7kΩ 5%
3H82	3198 031 01050	1MΩ 5% 0402
3H84	3198 031 04720	4.7kΩ 5% 0402
3H85	3198 031 04720	4.7kΩ 5% 0402
3H86	3198 031 04720	4.7kΩ 5% 0402
3H88	3198 031 04720	4.7kΩ 5% 0402
3H90	3198 031 04720	4.7kΩ 5% 0402
3H94	3198 031 04720	4.7kΩ 5% 0402
3H95	4822 117 13597	330Ω 5% 0.01W 0402
3H97	3198 031 04720	4.7kΩ 5% 0402
3H98	4822 117 13545	100Ω 1% 0402
3H99	4822 117 13545	100Ω 1% 0402
3I00	3198 031 07590	75Ω 5% 0402
3I01	3198 031 07590	75Ω 5% 0402
3I02	3198 031 07590	75Ω 5% 0402
3I03	4822 117 13545	100Ω 1% 0402
3I04	4822 117 13545	100Ω 1% 0402
3I06	4822 117 13545	100Ω 1% 0402
3I07	4822 117 13545	100Ω 1% 0402
3I08	4822 117 13545	100Ω 1% 0402
3I09	4822 117 11297	100kΩ 5% 0.1W
3I0A	4822 117 11297	100kΩ 5% 0.1W
3I0B	4822 117 13545	100Ω 1% 0402
3I0C	4822 117 11297	100kΩ 5% 0.1W
3I0D	4822 117 13545	100Ω 1% 0402
3I0E	4822 117 11297	100kΩ 5% 0.1W
3I0F	3198 031 07590	75Ω 5% 0402
3I0G	4822 117 13545	100Ω 1% 0402
3I0H	3198 031 07590	75Ω 5% 0402
3I0I	4822 117 13545	100Ω 1% 0402
3I0J	3198 031 07590	75Ω 5% 0402
3I0K	4822 117 13545	100Ω 1% 0402
3I0L	3198 031 07590	75Ω 5% 0402
3I0M	4822 117 13545	100Ω 1% 0402
3I0N	3198 031 07590	75Ω 5% 0402
3I0P	3198 031 07590	75Ω 5% 0402
3I0Q	4822 117 13545	100Ω 1% 0402
3I10	4822 117 13545	100Ω 1% 0402
3I11	4822 117 13545	100Ω 1% 0402
3I12	4822 117 13545	100Ω 1% 0402
3I13	3198 031 07590	75Ω 5% 0402
3I14	3198 031 01510	150Ω 5% 0.01W 0402
3I15	3198 031 01510	150Ω 5% 0.01W 0402
3I60	4822 117 13545	100Ω 1% 0402
3I66	4822 117 11297	100kΩ 5% 0.1W
3I67	4822 117 11297	100kΩ 5% 0.1W
3I68	4822 117 13596	220Ω 5% 0.01W 0402
3I69	3198 031 01210	120Ω 5% 0.01W 0402
3J07	3198 031 06890	68Ω 5% 0402
3J16	3198 031 01230	12kΩ 5% 0402
3J17	4822 117 13606	10kΩ 5% 0.01W 0402
3J18	3198 031 04720	4.7kΩ 5% 0402
3J20	4822 117 13605	Jumper 0402
3J21	3198 031 01530	15kΩ 5% 0.01W 0402
3J25	3198 031 04730	47Ω 5% 0402
3J28	4822 117 13606	10kΩ 5% 0.01W 0402
3J86	4822 117 13548	1kΩ 5% 0402
3J92	3198 031 04730	47Ω 5% 0402
3J94	4822 117 13606	10kΩ 5% 0.01W 0402
3J99	4822 117 13546	47Ω 5% 0402
3L00	4822 117 11297	100kΩ 5% 0.1W
3L01	4822 117 11297	100kΩ 5% 0.1W
3L02	4822 117 13606	10kΩ 5% 0.01W 0402
3L03	3198 031 04740	470kΩ 5% 0402
3L10	3198 031 03390	33Ω 1% 0402
3L11	2350 033 11339	4 x 33Ω 5%
3L12	2350 033 11339	4 x 33Ω 5%
3L13	2350 033 11339	4 x 33Ω 5%
3L14	2350 033 11339	4 x 33Ω 5%
3L15	3198 031 03390	33Ω 1% 0402
3L20	4822 117 13546	47Ω 5% 0402
3L21	2322 706 75601	560Ω 1% 0402
3L22	2322 706 75601	560Ω 1% 0402
3L38	2322 706 71002	1kΩ 1% 0402
3L39	2322 706 71002	1kΩ 1% 0402
3L40	3198 031 03390	33Ω 1% 0402
3L41	3198 031 03390	33Ω 1% 0402
3L42	3198 031 03390	33Ω 1% 0402
3L43	3198 031 03390	33Ω 1% 0402
3L44	3198 031 03390	33Ω 1% 0402
3L45	3198 031 03390	33Ω 1% 0402
3L46	3198 031 03390	33Ω 1% 0402
3L47	3198 031 03390	33Ω 1% 0402
3L48	3198 031 03390	33Ω 1% 0402
3L49	3198 031 03390	33Ω 1% 0402
3L50	3198 031 02290	22Ω 5% 0.1W 0402
3L51	4822 117 13545	100Ω 1% 0402
3L52	3198 031 02290	22Ω 5% 0.1W 0402
3L56	3198 031 02290	22Ω 5% 0.1W 0402
3L57	3198 031 02290	22Ω 5% 0.1W 0402
3L58	3198 031 02290	22Ω 5% 0.1W 0402
3L59	3198 031 02290	22Ω 5% 0.1W 0402
3L60	3198 031 02290	22Ω 5% 0.1W 0402
3L61	3198 031 02290	22Ω 5% 0.1W 0402
3L62	3198 031 02290	22Ω 5% 0.1W 0402
3L63	3198 031 02290	22Ω 5% 0.1W 0402
3L64	3198 031 02290	22Ω 5% 0.1W 0402
3L65	3198 031 02290	22Ω 5% 0.1W 0402
3L66	3198 031 02290	22Ω 5% 0.1W 0402
3L67	3198 031 02290	22Ω 5% 0.1W 0402
3L68	3198 031 02290	22Ω 5% 0.1W 0402
3L69	3198 031 02290	22Ω 5% 0.1W 0402
3L70	3198 031 02290	22Ω 5% 0.1W 0402
3L71	3198 031 02290	22Ω 5% 0.1W 0402
3L75	4822 117 11373	100Ω 1% 0805
3L76	4822 117 13606	10kΩ 5% 0.01W 0402
3L77	4822 117 13545	100Ω 1% 0402
3L78	4822 117 13606	10kΩ 5% 0.01W 0402
3L80	4822 117 13545	100Ω 1% 0402
3L81	4822 117 13606	10kΩ 5% 0.01W 0402
3L82	4822 117 13606	10kΩ 5% 0.01W 0402
3L83	4822 117 13606	10kΩ 5% 0.01W 0402
3L84	4822 117 13606	10kΩ 5% 0.01W 0402
3L85	4822 117 13606	10kΩ 5% 0.01W 0402
3L89	3198 031 02290	22Ω 5% 0.1W 0402
3L90	4822 117 13548	1kΩ 5% 0402
3L91	3198 031 03390	33Ω 1% 0402
3L92	3198 031 03390	33Ω 1% 0402
3L93	3198 031 03390	33Ω 1% 0402
3L94	3198 031 03390	33Ω 1% 0402
3L95	3198 031 03390	33Ω 1% 0402
3L96	3198 031 03390	33Ω 1% 0402
3L97	3198 031 03390	33Ω 1% 0402
3L98	3198 031 03390	33Ω 1% 0402

3L99	3198 031 02290	22Ω 5% 0.1W 0402
3LA0	4822 117 13606	10kΩ 5% 0.01W 0402
3LA2	4822 117 13606	10kΩ 5% 0.01W 0402
3LA3	4822 117 13606	10kΩ 5% 0.01W 0402
3LA4	4822 117 13606	10kΩ 5% 0.01W 0402
3LA5	4822 117 13548	1kΩ 5% 0402
3LA7	4822 117 13606	10kΩ 5% 0.01W 0402
3LA8	4822 117 13606	10kΩ 5% 0.01W 0402
3LA9	4822 117 13606	10kΩ 5% 0.01W 0402
3LB1	4822 117 13606	10kΩ 5% 0.01W 0402
3LB2	4822 117 13606	10kΩ 5% 0.01W 0402
3LB3	4822 117 13606	10kΩ 5% 0.01W 0402
3LB4	4822 117 13606	10kΩ 5% 0.01W 0402
3LB5	4822 117 13606	10kΩ 5% 0.01W 0402
3LB7	4822 117 13606	10kΩ 5% 0.01W 0402
3LB8	4822 117 13606	10kΩ 5% 0.01W 0402
3LB9	4822 117 13606	10kΩ 5% 0.01W 0402
3LC0	4822 117 13606	10kΩ 5% 0.01W 0402
3LC1	4822 117 13606	10kΩ 5% 0.01W 0402
3LC2	4822 117 13606	10kΩ 5% 0.01W 0402
3LC3	4822 117 13606	10kΩ 5% 0.01W 0402
3LC4	4822 117 13606	10kΩ 5% 0.01W 0402
3LC5	4822 117 11297	100kΩ 5% 0.1W
3LC6	3198 031 04720	4.7kΩ 5% 0402
3LC7	3198 031 04720	4.7kΩ 5% 0402
3LC8	4822 117 13606	10kΩ 5% 0.01W 0402
3LC9	4822 117 13606	10kΩ 5% 0.01W 0402
3LD0	4822 117 13606	10kΩ 5% 0.01W 0402
3LD1	4822 117 13606	10kΩ 5% 0.01W 0402
3LD2	4822 117 13606	10kΩ 5% 0.01W 0402
3LD3	4822 117 13606	10kΩ 5% 0.01W 0402
3LD4	4822 117 13606	10kΩ 5% 0.01W 0402
3LD5	4822 117 13606	10kΩ 5% 0.01W 0402
3LD6	4822 117 13606	10kΩ 5% 0.01W 0402
3LD7	4822 117 13606	10kΩ 5% 0.01W 0402
3LD8	4822 117 13606	10kΩ 5% 0.01W 0402
3LE1	4822 117 11373	100Ω 1% 0805
3LE2	4822 117 13545	100Ω 1% 0402
3LE3	3198 031 04720	4.7kΩ 5% 0402
3LE4	3198 031 04720	4.7kΩ 5% 0402
3LE5	4822 117 13606	10kΩ 5% 0.01W 0402
3LE6	4822 117 13606	10kΩ 5% 0.01W 0402
3LE7	4822 117 13606	10kΩ 5% 0.01W 0402
3LE8	4822 117 13606	10kΩ 5% 0.01W 0402
3LE9	4822 117 13606	10kΩ 5% 0.01W 0402
3LF0	4822 117 13545	100Ω 1% 0402
3LF8	4822 117 13545	100Ω 1% 0402
3LG2	4822 117 11297	100kΩ 5% 0.1W
3LG3	4822 117 13545	100Ω 1% 0402
3LG5	4822 117 13545	100Ω 1% 0402
3LG6	4822 117 13545	100Ω 1% 0402
3LG7	4822 117 13545	100Ω 1% 0402
3LG8	4822 117 13545	100Ω 1% 0402
3LG9	4822 117 13545	100Ω 1% 0402
3LH0	4822 117 13545	100Ω 1% 0402
3LH1	4822 117 13545	100Ω 1% 0402
3LH2	4822 117 11373	100Ω 1% 0805
3LH3	4822 117 13545	100Ω 1% 0402
3LH4	4822 117 13545	100Ω 1% 0402
3LH5	4822 117 13606	10kΩ 5% 0.01W 0402
3LH6	4822 117 13606	10kΩ 5% 0.01W 0402
3LH7	4822 117 11373	100Ω 1% 0805
3LH8	4822 117 13545	100Ω 1% 0402
3LH9	4822 117 13545	100Ω 1% 0402
3LJ0	4822 117 13545	100Ω 1% 0402
3LJ1	4822 117 13545	100Ω 1% 0402
3LJ2	4822 117 13606	10kΩ 5% 0.01W 0402
3LJ3	4822 117 13606	10kΩ 5% 0.01W 0402
3LJ5	4822 117 13545	100Ω 1% 0402
3LJ6	4822 117 13545	100Ω 1% 0402
3LJ7	4822 117 13545	100Ω 1% 0402
3LJ8	4822 117 13545	100Ω 1% 0402
3LJ9	4822 117 13545	100Ω 1% 0402
3LK0	4822 117 13545	100Ω 1% 0402
3LK1	4822 117 13545	100Ω 1% 0402
3LK2	4822 117 13545	100Ω 1% 0402
3LK3	4822 117 13545	100Ω 1% 0402
3LK5	4822 117 13545	100Ω 1% 0402
3LK6	4822 117 13545	100Ω 1% 0402
3LK7	4822 117 13545	100Ω 1% 0402
3LK8	4822 117 13545	100Ω 1% 0402
3LK9	4822 117 13545	100Ω 1% 0402
3LL0	4822 117 13545	100Ω 1% 0402
3LL1	4822 117 13545	100Ω 1% 0402
3LL2	4822 117 13545	100Ω 1% 0402
3LL3	4822 117 13545	100Ω 1% 0402
3LL4	4822 117 13545	100Ω 1% 0402
3LL5	4822 117 13545	100Ω 1% 0402
3LL6	4822 117 13545	100Ω 1% 0402
3LL7	4822 117 13545	100Ω 1% 0402
3LL8	4822 117 13597	330Ω 5% 0.01W 0402
3LL9	4822 117 13596	220Ω 5% 0.01W 0402
3LM0	4822 117 11373	100Ω 1% 0805
3LM2	4822 117 11373	100Ω 1% 0805
3LM3	4822 117 11373	100Ω 1% 0805
3LM4	4822 117 11373	100Ω 1% 0805
3LM5	4822 117 11373	100Ω 1% 0805
3LM7	4822 117 11373	100Ω 1% 0805
3LN0	4822 117 11373	100Ω 1% 0805
3LN1	4822 117 11373	100Ω 1% 0805
3LN2	4822 117 11373	100Ω 1% 0805
3LN3	4822 117 11373	100Ω 1% 0805
3LN4	4822 117 11373	100Ω 1% 0805
3LN5	4822 117 11373	100Ω 1% 0805
3LN6	4822 117 11373	100Ω 1% 0805
3LN7	4822 117 11373	100Ω 1% 0805
3LQ6	4822 117 11373	100Ω 1% 0805
3LR0	3198 031 03390	33Ω 1% 0402
3LR1	3198 031 03390	33Ω 1% 0402
3LR2	4822 117 13606	10kΩ 5% 0.01W 0402
3LR3	4822 117 11373	100Ω 1% 0805
3LR4	4822 117 13606	10kΩ 5% 0.01W 0402
3LR9	2350 033 11339	4 x 33Ω 5%
3LS0	2350 033 11339	4 x 33Ω 5%
3LS1	2350 033 11339	4 x 33Ω 5%
3LS2	3198 031 06810	680Ω 5% 0.01W 0402
3LT5	4822 117 13606	10kΩ 5% 0.01W 0402
3LT7	4822 117 11297	100kΩ 5% 0.1W
3LT9	3198 031 04730	47Ω 5% 0402
3LU0	4822 117 13606	10kΩ 5% 0.01W 0402
3LU1	4822 117 13606	10kΩ 5% 0.01W 0402
3LU2	4822 117 13606	10kΩ 5% 0.01W 0402
3LU7	4822 117 13602	2.2kΩ 5% 0.01W 0402
3LU8	4822 117 13548	1kΩ 5% 0402
3LV7	4822 117 13606	10kΩ 5% 0.01W 0402
3LV8	3198 031 02730	27kΩ 5% 0402
3M00	4822 117 13606	10kΩ 5% 0.01W 0402
3M02	4822 117 13606	10kΩ 5% 0.01W 0402
3M04	4822 117 13545	100Ω 1% 0402
3M50	4822 117 13605	Jumper 0402
3M51	4822 117 13605	Jumper 0402
3M52	4822 117 13605	Jumper 0402
3M53	4822 117 13605	Jumper 0402
3M54	4822 117 13605	Jumper 0402
3M71	4822 117 13606	10kΩ 5% 0.01W 0402
3M72	3198 031 06810	680Ω 5% 0.01W 0402
3P37	4822 117 11297	100kΩ 5% 0.1W
3P57	4822 117 13606	10kΩ 5% 0.01W 0402
3P80	4822 117 13606	10kΩ 5% 0.01W 0402
3P81	4822 117 13602	2.2kΩ 5% 0.01W 0402
3P82	4822 117 13606	10kΩ 5% 0.01W 0402
3P83	4822 117 13545	100Ω 1% 0402
3P84	4822 117 13545	100Ω 1% 0402
3P85	4822 117 13545	100Ω 1% 0402
3P86	4822 117 13545	100Ω 1% 0402
3P88	4822 117 13606	10kΩ 5% 0.01W 0402
3Q02	2350 033 11689	4x 68Ω 5% Netw.
3Q03	3198 031 04720	4.7kΩ 5% 0402
3Q04	3198 031 04720	4.7kΩ 5% 0402
3Q05	2350 033 11689	4x 68Ω 5% Netw.
3Q07	2350 033 11689	4x 68Ω 5% Netw.
3Q08	2350 033 11689	4x 68Ω 5% Netw.
3Q09	3198 031 03390	33Ω 1% 0402
3Q10	4822 117 13545	100Ω 1% 0402
3Q11	4822 117 13545	100Ω 1% 0402
3Q12	4822 117 13545	100Ω 1% 0402
3Q13	4822 117 13545	100Ω 1% 0402
3Q14	4822 117 13545	100Ω 1% 0402
3Q15	4822 117 13545	100Ω 1% 0402
3Q16	3198 031 01530	15kΩ 5% 0.01W 0402
3Q17	3198 031 01530	15kΩ 5% 0.01W 0402
3Q18	3198 031 01530	15kΩ 5% 0.01W 0402
3Q19	2122 662 00166	PTC 0.4Ω 6V 3216
3Q20	3198 031 02290	22Ω 5% 0.1W 0402
3Q21	3198 031 02290	22Ω 5% 0.1W 0402
3Q22	4822 117 13606	10kΩ 5% 0.01W 0402
3Q23	3198 031 01530	15kΩ 5% 0.01W 0402
3Q25	2350 033 11689	4x 68Ω 5% Netw.
3Q26	2350 033 11689	4x 68Ω 5% Netw.
3Q27	3198 031 04720	4.7kΩ 5% 0402
3Q28	2350 033 11689	4x 68Ω 5% Netw.
3Q29	3198 031 05620	5.6kΩ 5% 0.01W 0402
3Q34	2350 033 11689	4x 68Ω 5% Netw.
3Q35	2350 033 11339	4 x 33Ω 5%
3Q36	2350 033 11339	4 x 33Ω 5%
3Q37	2350 033 11339	4 x 33Ω 5%
3Q38	2350 033 11339	4 x 33Ω 5%
3Q39	3198 031 03390	33Ω 1% 0402
3Q40	3198 031 03390	33Ω 1% 0402
3Q41	3198 031 03390	33Ω 1% 0402
3Q44	2350 033 11689	4x 68Ω 5% Netw.
3Q48	4822 117 13545	100Ω 1% 0402
3Q52	4822 117 13545	100Ω 1% 0402
3T10	2322 762 60479	47Ω 5% 2512
3T15	3198 031 04720	4.7kΩ 5% 0402
3T18	3198 031 04720	4.7kΩ 5% 0402
3T20	2322 762 60479	47Ω 5% 2512
3T21	3198 031 04720	4.7kΩ 5% 0402
3T21	4822 117 11297	100kΩ 5% 0.1W
3T22	4822 117 13596	220Ω 5% 0.01W 0402
3T23	4822 117 13596	220Ω 5% 0.01W 0402
3T25	4822 117 13602	2.2kΩ 5% 0.01W 0402
3T27	4822 117 13548	1kΩ 5% 0402
3T28	4822 117 13602	2.2kΩ 5% 0.01W 0402
3T29	4822 117 13548	1kΩ 5% 0402
3T35	2350 033 11689	4x 68Ω 5% Netw.
3T36	2350 033 11689	4x 68Ω 5% Netw.
3T37	2350 033 11689	4x 68Ω 5% Netw.
3T38	2322 706 73303	33kΩ 5% 0402
3T39	2322 706 73303	33kΩ 5% 0402
3T40	4822 117 13548	1kΩ 5% 0402
3T41	4822 117 13596	220Ω 5% 0.01W 0402
3T42	3198 031 08220	8.2kΩ 5% 0.5W
3T43	4822 117 13548	1kΩ 5% 0402
3T44	4822 117 13596	220Ω 5% 0.01W 0402
3T45	3198 031 04730	47Ω 5% 0402
3T46	3198 031 04730	47Ω 5% 0402
3T47	4822 117 13548	1kΩ 5% 0402
3T48	3198 031 04720	4.7kΩ 5% 0402
3T49	3198 031 04730	47Ω 5% 0402
3T50	3198 031 04730	47Ω 5% 0402
3T51	4822 117 13545	100Ω 1% 0402
3T52	4822 117 13545	100Ω 1% 0402
3T57	4822 117 13605	Jumper 0402
3T58	4822 117 13605	Jumper 0402
3U00	4822 117 13603	33kΩ 5% 0402
3U01	4822 117 13603	33kΩ 5% 0402
3U02	4822 117 13596	220Ω 5% 0.01W 0402
3U03	4822 117 13606	10kΩ 5% 0.01W 0402
3U04	4822 117 13601	22kΩ 5% 0402
3U05	4822 117 13596	220Ω 5% 0.01W 0402
3U06	3198 031 03930	39kΩ 5% 0402
3U07	3198 031 06820	6.8kΩ 5% 0.01W 0402
3U08	3198 031 03320	3.3kΩ 5% 0402
3U09	3198 031 03320	3.3kΩ 5% 0402
3U10	4822 117 13548	1kΩ 5% 0402
3U11	4822 051 30221	220Ω 5% 0.062W
3U12	4822 117 13548	1kΩ 5% 0402
3U13	3198 031 06820	6.8kΩ 5% 0.01W 0402
3U14	3198 031 06820	6.8kΩ 5% 0.01W 0402
3U15	4822 117 13548	1kΩ 5% 0402
3U16	3198 031 04720	4.7kΩ 5% 0402
3U17	2322 706 71002	1kΩ 1% 0402
3U18	4822 117 13596	220Ω 5% 0.01W 0402
3U19	4822 117 13601	22kΩ 5% 0402
3U20	4822 051 30109	10Ω 5% 0.062W
3U21	4822 051 30109	10Ω 5% 0.062W
3U22	5322 117 11726	10Ω 5%
3U23	4822 051 30008	Jumper 0603
3U24	4822 051 30109	10Ω 5% 0.062W
3U25	4822 117 13613	2.2Ω 5% 0603
3U26	4822 051 30008	Jumper 0603
3U27	4822 051 30109	10Ω 5% 0.062W
3U28	4822 117 13613	2.2Ω 5% 0603
3U29	4822 117 13548	1kΩ 5% 0402
3U30	4822 117 13548	1kΩ 5% 0402
3U32	4822 117 13606	10kΩ 5% 0.01W 0402
3U33	4822 117 13606	10kΩ 5% 0.01W 0402
3U34	4822 117 13606	10kΩ 5% 0.01W 0402
3U35	4822 117 13601	22kΩ 5% 0402
3U37	2322 706 74701	470Ω 1% 0402
3U38	3198 031 06820	6.8kΩ 5% 0.01W 0402
3U39	4822 117 11297	100kΩ 5% 0.1W
3U42	3198 031 04730	47Ω 5% 0402
3U44	3198 031 04730	47Ω 5% 0402
3U47	4822 117 13545	100Ω 1% 0402
3U48	4822 117 13545	100Ω 1% 0402
3U54	3198 031 01090	10Ω 5% 0.01W 0402
3U55	4822 117 13606	10kΩ 5% 0.01W 0402
3U56	4822 117 13548	1kΩ 5% 0402
3U82	3198 031 06820	6.8kΩ 5% 0.01W 0402
3U83	3198 031 06820	6.8kΩ 5% 0.01W 0402
3U85	4822 117 13606	10kΩ 5% 0.01W 0402
3U86	4822 117 13606	10kΩ 5% 0.01W 0402
3U87	4822 117 13606	10kΩ 5% 0.01W 0402
3U88	4822 117 13545	100Ω 1% 0402
3U89	4822 117 13606	10kΩ 5% 0.01W 0402
3U90	4822 117 13606	10kΩ 5% 0.01W 0402
3U91	4822 117 13606	10kΩ 5% 0.01W 0402
3U92	4822 117 13606	10kΩ 5% 0.01W 0402
3U93	4822 117 13606	10kΩ 5% 0.01W 0402
3U94	3198 031 03320	3.3kΩ 5% 0402
3U95	4822 117 13602	2.2kΩ 5% 0.01W 0402
3U96	3198 031 06820	6.8kΩ 5% 0.01W 0402
3U96	4822 117 13601	22kΩ 5% 0402
3U97	3198 031 03320	3.3kΩ 5% 0402
3UA1	3198 031 03320	3.3kΩ 5% 0402
3UA3	4822 117 13602	2.2kΩ 5% 0.01W 0402
3UA4	2322 706 71002	1kΩ 1% 0402
3UA5	2322 706 76809	68Ω 1% 0402 RC32
3UA7	2322 706 71002	1kΩ 1% 0402
3UA8	3198 031 06890	68Ω 5% 0402

3UA9	3198 031 06890	68Ω 5% 0402
3V00	3198 031 02290	22Ω 5% 0.1W 0402
3V01	3198 031 02290	22Ω 5% 0.1W 0402
3V02	3198 031 02290	22Ω 5% 0.1W 0402
3V03	3198 031 02290	22Ω 5% 0.1W 0402
3V04	3198 031 02290	22Ω 5% 0.1W 0402
3V05	3198 031 02290	22Ω 5% 0.1W 0402
3V06	3198 031 02290	22Ω 5% 0.1W 0402
3V07	3198 031 02290	22Ω 5% 0.1W 0402
3V08	3198 031 02290	22Ω 5% 0.1W 0402
3V09	3198 031 02290	22Ω 5% 0.1W 0402
3V10	3198 031 02290	22Ω 5% 0.1W 0402
3V11	3198 031 02290	22Ω 5% 0.1W 0402
3V12	3198 031 02290	22Ω 5% 0.1W 0402
3V13	3198 031 02290	22Ω 5% 0.1W 0402
3V14	3198 031 02290	22Ω 5% 0.1W 0402
3V15	3198 031 02290	22Ω 5% 0.1W 0402
3V16	3198 031 02290	22Ω 5% 0.1W 0402
3V17	3198 031 02290	22Ω 5% 0.1W 0402
3V18	3198 031 02290	22Ω 5% 0.1W 0402
3V19	3198 031 02290	22Ω 5% 0.1W 0402
3V20	3198 031 02290	22Ω 5% 0.1W 0402
3V21	3198 031 02290	22Ω 5% 0.1W 0402
3V22	3198 031 02290	22Ω 5% 0.1W 0402
3V23	3198 031 02290	22Ω 5% 0.1W 0402
3V24	4822 117 13596	220Ω 5% 0.01W 0402
3V25	4822 117 13596	220Ω 5% 0.01W 0402
3V32	3198 031 02290	22Ω 5% 0.1W 0402
3V33	3198 031 02290	22Ω 5% 0.1W 0402
3V34	3198 031 02290	22Ω 5% 0.1W 0402
3V35	3198 031 02290	22Ω 5% 0.1W 0402
3V36	3198 031 02290	22Ω 5% 0.1W 0402
3V37	3198 031 02290	22Ω 5% 0.1W 0402
3V38	3198 031 02290	22Ω 5% 0.1W 0402
3V39	3198 031 02290	22Ω 5% 0.1W 0402
3V40	3198 031 02290	22Ω 5% 0.1W 0402
3V41	3198 031 02290	22Ω 5% 0.1W 0402
3V42	3198 031 02290	22Ω 5% 0.1W 0402
3V43	3198 031 02290	22Ω 5% 0.1W 0402
3V78	4822 117 13548	1kΩ 5% 0402
9A10	4822 051 20008	Jumper 0805
9A19	4822 117 13605	Jumper 0402
9B10	4822 117 13605	Jumper 0402
9B11	4822 117 13605	Jumper 0402
9B52	4822 117 13605	Jumper 0402
9B53	4822 117 13605	Jumper 0402
9B54	4822 117 13605	Jumper 0402
9D03	2350 033 91001	4 x Jumper
9D04	2350 033 91001	4 x Jumper
9D05	4822 117 13605	Jumper 0402
9D48	4822 117 13605	Jumper 0402
9H02	4822 117 13605	Jumper 0402
9H03	4822 117 13605	Jumper 0402
9H05	4822 117 13605	Jumper 0402
9H06	4822 117 13605	Jumper 0402
9H07	4822 117 13605	Jumper 0402
9H08	4822 117 13605	Jumper 0402
9H13	4822 117 13605	Jumper 0402
9H15	4822 117 13605	Jumper 0402
9H16	4822 117 13605	Jumper 0402
9J21	4822 117 13605	Jumper 0402
9J22	4822 117 13605	Jumper 0402
9J23	4822 117 13605	Jumper 0402
9J31	4822 051 20008	Jumper 0805
9J40	4822 117 13605	Jumper 0402
9LA0	4822 117 13605	Jumper 0402
9LA1	4822 117 13605	Jumper 0402
9LA8	4822 117 13605	Jumper 0402
9LA9	4822 117 13605	Jumper 0402
9M09	4822 117 13605	Jumper 0402
9P17	4822 117 13605	Jumper 0402
9T10	4822 117 13605	Jumper 0402
9T11	4822 117 13605	Jumper 0402
9T12	4822 117 13605	Jumper 0402
9T13	4822 117 13605	Jumper 0402
9U03	4822 117 13605	Jumper 0402

5A10	2422 549 44197	Bead 220Ω at 100MHz
5A11	2422 549 44197	Bead 220Ω at 100MHz
5A12	2422 549 44197	Bead 220Ω at 100MHz
5A13	2422 549 44197	Bead 220Ω at 100MHz
5A14	2422 549 44197	Bead 220Ω at 100MHz
5A15	2422 549 44197	Bead 220Ω at 100MHz
5A16	2422 549 44197	Bead 220Ω at 100MHz
5A17	2422 549 44197	Bead 220Ω at 100MHz
5A18	2422 535 94565	0.56µH 10% 0603
5A64	2422 549 43062	Bead 600Ω at 100MHz
5A65	2422 549 43062	Bead 600Ω at 100MHz
5B00	2422 549 43062	Bead 600Ω at 100MHz
5B10	2422 549 44197	Bead 220Ω at 100MHz
5B11	2422 549 44197	Bead 220Ω at 100MHz
5B12	2422 549 44197	Bead 220Ω at 100MHz
5B17	2422 549 44197	Bead 220Ω at 100MHz
5B18	2422 549 44197	Bead 220Ω at 100MHz
5B20	2422 535 94151	22nH 2% 0805
5B20	2422 535 94778	22nH 5% 0603
5B65	3198 018 51080	1µH 10% 0603
5B67	3198 018 51080	1µH 10% 0603
5B69	3198 018 51080	1µH 10% 0603
5B71	3198 018 51080	1µH 10% 0603
5B73	3198 018 51080	1µH 10% 0603
5B75	3198 018 51080	1µH 10% 0603
5D10	2422 549 44197	Bead 220Ω at 100MHz
5D11	2422 549 44197	Bead 220Ω at 100MHz
5D12	2422 536 00707	33µH 20%
5D13	2422 536 00707	33µH 20%
5D14	2422 549 44197	Bead 220Ω at 100MHz
5D15	2422 549 44197	Bead 220Ω at 100MHz
5D16	2422 549 44197	Bead 220Ω at 100MHz
5D18	2422 549 44197	Bead 220Ω at 100MHz
5D19	2422 549 44197	Bead 220Ω at 100MHz
5H02	2422 549 45325	Bead 67Ω at 100MHz
5H03	2422 549 44197	Bead 220Ω at 100MHz
5I02	2422 549 42896	Bead 120Ω 100MHz
5J00	2422 549 42896	Bead 120Ω 100MHz
5J01	2422 549 42896	Bead 120Ω 100MHz
5J02	2422 549 42896	Bead 120Ω 100MHz
5J03	2422 549 42896	Bead 120Ω 100MHz
5J04	2422 549 42896	Bead 120Ω 100MHz
5J05	2422 549 42896	Bead 120Ω 100MHz
5J06	2422 549 42896	Bead 120Ω 100MHz
5J07	2422 549 42896	Bead 120Ω 100MHz
5J10	4822 051 20008	Jumper 0805
5J11	4822 051 20008	Jumper 0805
5J12	4822 051 20008	Jumper 0805
5J50	2422 549 45325	Bead 67Ω at 100MHz
5J52	2422 549 45325	Bead 67Ω at 100MHz
5J54	2422 549 45325	Bead 67Ω at 100MHz
5J56	2422 549 45325	Bead 67Ω at 100MHz
5J58	2422 549 45325	Bead 67Ω at 100MHz
5L50	2422 549 43769	Bead 30Ω at 100MHz
5L51	2422 549 44197	Bead 220Ω at 100MHz
5L52	2422 549 44197	Bead 220Ω at 100MHz
5LA1	2422 549 43062	Bead 600Ω at 100MHz
5LA2	2422 549 43062	Bead 600Ω at 100MHz
5LA3	2422 549 43062	Bead 600Ω at 100MHz
5LN0	2422 549 43062	Bead 600Ω at 100MHz
5LN1	2422 549 43062	Bead 600Ω at 100MHz
5LN2	2422 549 43062	Bead 600Ω at 100MHz
5LN3	2422 549 43062	Bead 600Ω at 100MHz
5LN4	2422 549 43062	Bead 600Ω at 100MHz
5M00	2422 549 44197	Bead 220Ω at 100MHz
5M02	2422 549 44197	Bead 220Ω at 100MHz
5M03	2422 549 44197	Bead 220Ω at 100MHz
5M09	2422 549 44197	Bead 220Ω at 100MHz
5M10	2422 549 44197	Bead 220Ω at 100MHz
5M11	2422 549 44197	Bead 220Ω at 100MHz
5M12	2422 549 44197	Bead 220Ω at 100MHz
5Q01	2422 549 43062	Bead 600Ω at 100MHz
5Q02	2422 549 43062	Bead 600Ω at 100MHz
5Q03	2422 549 43062	Bead 600Ω at 100MHz
5Q04	2422 549 43062	Bead 600Ω at 100MHz
5Q07	2422 549 44197	Bead 220Ω at 100MHz
5Q08	2422 549 44197	Bead 220Ω at 100MHz
5T11	2422 549 44197	Bead 220Ω at 100MHz
5T20	2422 549 44197	Bead 220Ω at 100MHz
5T21	2422 549 44197	Bead 220Ω at 100MHz
5T23	2422 549 44197	Bead 220Ω at 100MHz
5T24	2422 549 44197	Bead 220Ω at 100MHz
5T25	2422 549 44197	Bead 220Ω at 100MHz
5T26	2422 549 44197	Bead 220Ω at 100MHz
5T27	2422 549 43062	Bead 600Ω at 100MHz
5T28	2422 549 44197	Bead 220Ω at 100MHz
5U00	2422 536 00671	10µH 20%
5U02	2422 536 00779	10µH 20%
5U03	2422 536 00671	10µH 20%
5U35	4822 051 20008	Jumper 0805
5U36	4822 051 20008	Jumper 0805
5U37	4822 051 20008	Jumper 0805
5U38	4822 051 20008	Jumper 0805

6A11	4822 130 11397	BAS316
6B20	4822 130 11397	BAS316
6B21	9340 548 68115	PDZ24B
6D10	4822 130 11397	BAS316
6D11	4822 130 11152	UDZ18B
6D11	9340 548 69115	PDZ27B
6D12	4822 130 11397	BAS316
6H00	9322 134 46685	SML-310MT
6H01	4822 130 11397	BAS316
6H03	4822 130 11397	BAS316
6H07	9340 566 10115	BAV99S
6H10	4822 130 11416	PDZ6.8B
6H11	4822 130 11416	PDZ6.8B
6H12	4822 130 11416	PDZ6.8B
6I00	9340 548 68115	PDZ24B
6I01	9340 566 10115	BAV99S
6I02	9340 548 68115	PDZ24B
6I08	9340 548 68115	PDZ24B
6I09	9340 548 68115	PDZ24B
6I0A	9340 548 68115	PDZ24B
6I0D	9340 548 68115	PDZ24B
6I0F	9340 548 68115	PDZ24B
6I0H	9340 548 68115	PDZ24B
6I0J	9340 548 68115	PDZ24B
6I0L	9340 548 68115	PDZ24B
6I0N	9340 548 68115	PDZ24B
6I0P	9340 548 68115	PDZ24B
6I0T	9340 548 68115	PDZ24B
6I0V	9340 548 68115	PDZ24B
6I0Y	9340 548 68115	PDZ24B
6I10	9340 548 68115	PDZ24B
6I11	9340 548 68115	PDZ24B
6J01	3198 020 55680	BZX384-C5V6
6J06	9322 134 46685	SML-310MT
6J07	4822 130 11397	BAS316
6J08	4822 130 80622	BAT54
6M10	4822 130 11564	UDZ3.9B
6U11	9322 159 70685	MM3Z9V1
6U12	4822 130 11397	BAS316
6U21	4822 130 11152	UDZ18B
6U22	4822 130 11397	BAS316
6U23	4822 130 11397	BAS316

7A00	9352 767 55557	PNX3000HL/N3
7A04	9322 187 67668	TS482IS
7A05	9322 185 74668	LM324P
7A08	3198 010 42310	BC847BW
7A10	3198 010 42310	BC847BW
7A11	3198 010 42310	BC847BW
7A14	9340 219 30115	BC817-25W
7A15	3198 010 42320	BC857BW
7A16	9340 219 30115	BC817-25W
7A17	3198 010 42310	BC847BW
7B02		For SW see item 0802
7B20	3198 010 42310	BC847BW
7B25	9322 213 41685	LD3985M18
7B45	4822 209 17398	LD1117DT33
7B50	9352 798 04557	TDA9970HS/8/C2
7D10	9322 213 35668	LM339P
7D11	9340 425 20115	BC847BS
7D12	9340 425 20115	BC847BS
7D14	3198 010 42310	BC847BW
7D15	3198 010 44350	BC807-25W
7D16	9340 425 30115	BC847BPN
7D17	9340 219 30115	BC817-25W
7D18	8238 277 12651	SI4532ADY
7D18	9322 224 40668	FET FDS4559_NL
7D19	3198 010 42310	BC847BW
7D20	3198 010 44350	BC807-25W
7D21	9340 425 30115	BC847BPN
7D22	9340 219 30115	BC817-25W
7D23	8238 277 12651	SI4532ADY
7D23	9322 224 40668	FET FDS4559_NL
7D24	9340 219 30115	BC817-25W
7D25	9340 425 30115	BC847BPN
7D26	9340 425 30115	BC847BPN
7J00	9352 806 65557	PNX2015E/M1E03
7J01	3198 010 42310	BC847BW
7J02	9340 425 30115	BC847BPN
7J06	3198 010 42310	BC847BW
7J07	3198 010 42310	BC847BW
7J08	9322 204 10685	SI3441BDV
7L50	9322 228 06671	K4D261638I-LC40
7LA7		For SW see item 0802
7LB2	9340 425 20115	BC847BS
7LB5	3198 010 42310	BC847BW
7M01	3198 010 42310	BC847BW
7M05	9322 213 43685	LD3985M33
7M06	9322 218 04685	LD3985M122
7M11	9340 310 30215	PDTC144ET
7P14	9322 206 22668	M24C64-WDW6P
7P15	9351 750 00118	74HC4066PW
7P16	3198 010 44310	PDTC114EU
7P17	3198 010 44310	PDTC114EU
7P18	3198 010 44210	PDTA114EU
7P80		For SW see item 0802
7T10	9322 202 58668	LD1117DT50
7T12	3198 010 42310	BC847BW
7T13	9322 183 24669	LA7795T-E
7T20	9340 425 30115	BC847BPN
7T21	9322 163 75685	SI2306DS
7T22	9322 211 68668	NXT2004

7U00	9322 207 46668	NCP5422AD
7U01	9322 160 70668	SI4936ADY
7U03	9322 160 70668	SI4936ADY
7U05	9340 425 20115	BC847BS
7U07	9340 219 30115	BC817-25W
7U10	9340 425 10115	BC857BS
7U13	9340 425 30115	BC847BPN
7U15	9340 425 20115	BC847BS
7U24	3198 010 42310	BC847BW
7U25	9322 160 70668	SI4936ADY
7U27	9322 192 16685	TS2431AI
7U28	9340 575 87118	PHD38N02LT
7V00	9352 803 38557	PNX8552EH/M2/S1
7V01	9322 221 77671	K4D551638F-LC40
7V02	9322 221 77671	K4D551638F-LC40

Side I/O Panel [D]

Various

1001	2422 026 05133	Connector SVHS 4p f
1002	2422 026 05807	Sckt Cinch 3p f YeWhRd
1005	2422 033 00486	Socket USB 4p F
1010	4822 267 31014	Sckt headphone
1301	4822 267 10484	YKF51-5359
1302	2422 026 05808	Cinch 3p f Ye
1303	2422 026 05059	Connector Phone
1304	2422 025 10655	Connector 11p m
1308	2422 025 18984	Sock. USB 4p f 2/2.5
1309	2422 025 09406	Connector 4p m
1310	2422 025 10768	Connector 3p m
1M36	2422 025 10655	Connector 11p m
1M60	2422 025 09406	Connector 4p m
1M65	2422 025 18738	Connector 3p m

⊣⊢

2003	2022 552 05679	1µF 10% 16V 0805
2004	4822 126 14249	560pF 10% 50V 0603
2005	2020 552 94427	100pF 5% 50V
2006	4822 126 14249	560pF 10% 50V 0603
2007	2020 552 94427	100pF 5% 50V
2008	2238 916 15641	22nF 10% 25V 0603
2009	5322 126 11583	10nF 10% 50V 0603
2010	2238 916 15641	22nF 10% 25V 0603
2011	5322 126 11583	10nF 10% 50V 0603
2012	2020 012 00016	100µF 20% 6.3V
2301	4822 126 11785	47pF 5% 50V 0603
2302	4822 126 11785	47pF 5% 50V 0603
2303	4822 122 33761	22pF 5% 50V
2304	4822 126 11785	47pF 5% 50V 0603
2305	2020 552 94427	100pF 5% 50V
2306	2020 552 94427	100pF 5% 50V
2307	2238 916 15641	22nF 10% 25V 0603
2308	2238 916 15641	22nF 10% 25V 0603
2309	5322 126 11583	10nF 10% 50V 0603
2310	5322 126 11583	10nF 10% 50V 0603
2311	4822 122 33761	22pF 5% 50V
2312	2020 004 90297	100µF 20% 16V

⊣WW⊢

3000	4822 051 30759	75Ω 5% 0.062W
3004	4822 051 30759	75Ω 5% 0.062W
3008	4822 051 30222	2.2kΩ 5% 0.062W
3009	4822 051 30102	1kΩ 5% 0.062W
3010	4822 051 30333	33kΩ 5% 0.062W
3011	4822 051 30392	3.9Ω 5% 0.063W 0603
3012	4822 051 30102	1kΩ 5% 0.062W
3013	4822 051 30333	33kΩ 5% 0.062W
3016	4822 051 30103	10kΩ 5% 0.062W
3020	4822 051 30103	10kΩ 5% 0.062W
3301	4822 051 30759	75Ω 5% 0.062W
3302	4822 051 30759	75Ω 5% 0.062W
3303	4822 051 30109	10Ω 5% 0.062W
3304	4822 051 30101	100Ω 5% 0.062W
3305	4822 051 30109	10Ω 5% 0.062W
3306	4822 051 30101	100Ω 5% 0.062W
3307	4822 051 30101	100Ω 5% 0.062W
3308	4822 051 30101	100Ω 5% 0.062W
3309	4822 117 13632	100kΩ 1% 0603 0.62W
3310	4822 051 30101	100Ω 5% 0.062W
3311	4822 117 13632	100kΩ 1% 0603 0.62W
3312	4822 051 30103	10kΩ 5% 0.062W
3313	4822 051 30103	10kΩ 5% 0.062W
3999	4822 051 30151	150Ω 5% 0.062W

⌐⌐

5000	2422 549 44197	Bead 220Ω at 100MHz
5300	2422 549 44197	Bead 220Ω at 100MHz
5301	4822 051 20008	Jumper 0805
5302	4822 051 20008	Jumper 0805

⊣▷⊢

6000	4822 130 11416	PDZ6.8B
6001	4822 130 11416	PDZ6.8B
6002	4822 130 11416	PDZ6.8B
6003	4822 130 11416	PDZ6.8B
6004	4822 130 11416	PDZ6.8B
6005	4822 130 11416	PDZ6.8B
6006	4822 130 11416	PDZ6.8B
6007	4822 130 11416	PDZ6.8B
6008	4822 130 11416	PDZ6.8B
6009	4822 130 11416	PDZ6.8B
6010	4822 130 11416	PDZ6.8B
6011	4822 130 11416	PDZ6.8B
6301	9322 146 61685	DF3A6.8FU
6302	9322 146 61685	DF3A6.8FU
6303	9322 146 61685	DF3A6.8FU
6304	9322 146 61685	DF3A6.8FU
6305	9322 146 61685	DF3A6.8FU
6306	9322 146 61685	DF3A6.8FU
6307	9322 146 61685	DF3A6.8FU

Control Panel [E]

Various

1701	4822 276 13775	Switch 1p 0.1A 12V
1702	4822 276 13775	Switch 1p 0.1A 12V
1703	4822 276 13775	Switch 1p 0.1A 12V
1704	4822 276 13775	Switch 1p 0.1A 12V
1705	4822 276 13775	Switch 1p 0.1A 12V
1706	4822 276 13775	Switch 1p 0.1A 12V
1M01	4822 267 10459	Connector 3p

⊣WW⊢

3002	4822 051 30681	680Ω 5% 0.062W
3003	4822 051 30102	1kΩ 5% 0.062W
3004	4822 051 30102	1kΩ 5% 0.062W
3005	4822 051 30391	390Ω 5% 0.062W
3006	4822 051 30101	100Ω 5% 0.062W
3008	4822 051 30102	1kΩ 5% 0.062W
3009	4822 051 30101	100Ω 5% 0.062W
3999	4822 051 30103	10kΩ 5% 0.062W
9002	4822 051 30101	100Ω 5% 0.062W

Front IR / LED Panel [J]

Various

1309	4822 276 13775	Switch 1p 0.1A 12V
1310	4822 276 13775	Switch 1p 0.1A 12V
1311	4822 276 13775	Switch 1p 0.1A 12V
1312	4822 276 13775	Switch 1p 0.1A 12V
1313	4822 276 13775	Switch 1p 0.1A 12V
1314	4822 276 13775	Switch 1p 0.1A 12V
1684	4822 267 10459	Connector 3p
1870	4822 265 31067	Connector 7p m

⊣⊢

2801	2020 552 96637	10µF 10% 6.3V 0805
2802	2020 552 96637	10µF 10% 6.3V 0805

⊣WW⊢

3318	4822 051 30621	620R00 5% 0,062W
3319	2322 702 60112	1.1kΩ 5% 0603
3320	2322 702 60201	200Ω 5% 0603
3321	4822 051 30391	390Ω 5% 0.062W
3324	2322 702 60202	2kΩ 5% 0603
3802	4822 051 30151	150Ω 5% 0.062W
3802	4822 051 30331	330Ω 5% 0.062W
3803	4822 051 30221	220Ω 5% 0.062W
3804	3198 021 32250	2.2MΩ 5% 0603
3804	4822 051 30151	150Ω 5% 0.062W
3805	3198 021 31080	1Ω 5% 0603
3806	3198 021 32250	2.2MΩ 5% 0603
3807	4822 051 30151	150Ω 5% 0.062W
3809	3198 021 32250	2.2MΩ 5% 0603
3810	3198 021 32250	2.2MΩ 5% 0603
4806	4822 051 30008	Jumper 0603
4807	4822 051 30008	Jumper 0603
4809	4822 051 30008	Jumper 0603
4815	4822 051 30008	Jumper 0603

⊣▷⊢

6306	4822 130 11416	PDZ6.8B
6801	9322 192 35676	SPR-325MVW
6804	4822 130 11564	UDZ3.9B
6809	4822 130 11564	UDZ3.9B

7801	5322 130 60159	BC846B
7802	9322 206 81667	TSOP34836YA1
7802	9322 207 16667	TSOP34836LL1B
7803	5322 130 60159	BC846B
7805	5322 130 60159	BC846B

Standby & Audio Panel [SA]

Various

1303	2422 025 04475	Connector 4p m
1304	2422 025 10647	Connector 4p m
1305	4822 267 10735	Connector 3p
1306	2422 025 16374	Connector 2p m
1307	2422 025 10647	Connector 4p m
1309	2422 025 11143	Connector 3p m
1315	2422 025 10771	Connector 10p m
1316	2422 025 10772	Connector 12p m
1317	2422 025 10772	Connector 12p m
1320	2422 025 11143	Connector 3p m
1M03	2422 025 10771	Connector 10p m
1M46	2422 025 10655	Connector 11p m

⊣⊢

2101	4822 121 51598	2.2nF 5% 400V
2102	4822 124 40207	100µF 20% 25V
2103	2020 552 94427	100pF 5% 50V
2105	2020 552 94427	100pF 5% 50V
2109	4822 126 14583	470nF 10% 16V 0805
2110	2022 552 05679	1µF 10% 16V 0805
2111	4822 121 43526	47nF 5% 250V
2112	5322 126 11583	10nF 10% 50V 0603
2123	2238 586 59812	100nF 20% 50V 0603
2124	4822 124 40248	10µF 20% 63V
2129	5322 126 11578	1nF 10% 50V 0603
2140	4822 124 40248	10µF 20% 63V
2141	4822 126 14583	470nF 10% 16V 0805
2144	2022 552 05679	1µF 10% 16V 0805
2145	4822 126 13881	470pF 5% 50V
2149	4822 126 14583	470nF 10% 16V 0805
2150	4822 124 12379	220µF 25V
2152	4822 121 70162	10nF 5% 400V
2153	5322 126 11582	6.8nF 10% 63V
2154	3198 017 31530	15nF 20% 50V 0603
2163	4822 124 40207	100µF 20% 25V
2506	2022 554 04155	470pF 20% 250V
2507	4822 126 13682	100pF 5% 1kV
2508	4822 124 40764	22µF 100V
2510	2020 021 91668	2200µF 20% 10V
2511	4822 124 12379	220µF 25V
2512	4822 124 80061	1000µF 20% 25V
2513	2222 930 56627	2.2nF 10% 200V 0805
2533	4822 124 40207	100µF 20% 25V
2534	2022 552 05679	1µF 10% 16V 0805
2535	5322 126 11583	10nF 10% 50V 0603
2536	5322 126 11583	10nF 10% 50V 0603
2537	4822 126 14238	2.2nF 50V 0603
2539	2022 552 05679	1µF 10% 16V 0805
2540	5322 126 11583	10nF 10% 50V 0603
2544	5322 126 11583	10nF 10% 50V 0603

⊣WW⊢

3100	4822 051 30101	100Ω 5% 0.062W
3101	4822 053 20475	4.7MΩ 5% 0.25W
3102	2312 915 11002	1kΩ 1% 0.5W
3103	2312 915 11002	1kΩ 1% 0.5W
3104	4822 051 30479	47Ω 5% 0.062W
3105	4822 051 30221	220Ω 5% 0.062W
3106	4822 051 30391	390Ω 5% 0.062W
3107	4822 051 30391	390Ω 5% 0.062W
3108	2322 193 14688	6.8Ω 5%
3109	4822 051 30391	390Ω 5% 0.062W
3110	4822 051 30391	390Ω 5% 0.062W
3111	4822 053 10152	1.5kΩ 5% 1W
3112	4822 051 30391	390Ω 5% 0.062W
3113	3198 021 32290	22Ω 5% 0603
3114	4822 051 30221	220Ω 5% 0.062W

3117	4822 051 30479	47Ω 5% 0.062W
3121	4822 051 30223	22kΩ 5% 0.062W
3122	4822 051 30471	47Ω 5% 0.062W
3123	4822 051 30109	10Ω 5% 0.062W
3124	4822 051 30339	33Ω 5% 0.062W
3125	4822 117 12971	15Ω 5% 0603 0.62W
3126	4822 051 30103	10kΩ 5% 0.062W
3127	4822 051 30562	5.6kΩ 5% 0.063W 0603
3128	3198 021 34780	4.7Ω 5% 0603
3132	4822 051 30333	33kΩ 5% 0.062W
3134	4822 051 30102	1kΩ 5% 0.062W
3138	4822 051 30105	1MΩ 5% 0.062W
3140	4822 051 30223	22kΩ 5% 0.062W
3141	4822 051 30471	47Ω 5% 0.062W
3145	4822 051 30472	4.7Ω 5% 0.062W
3146	4822 051 30479	47Ω 5% 0.062W
3147	4822 051 30223	22kΩ 5% 0.062W
3148	4822 051 30339	33Ω 5% 0.062W
3149	4822 051 30103	10kΩ 5% 0.062W
3150	4822 051 30101	100Ω 5% 0.062W
3152	4822 051 30102	1kΩ 5% 0.062W
3153	4822 051 30223	22kΩ 5% 0.062W
3155	4822 050 21003	10kΩ 1% 0.6W
3156	4822 051 30102	1kΩ 5% 0.062W
3157	4822 051 30223	22kΩ 5% 0.062W
3158	4822 051 30479	47Ω 5% 0.062W
3159	4822 051 30479	47Ω 5% 0.062W
3160	4822 051 30102	1kΩ 5% 0.062W
3175	4822 051 30103	10kΩ 5% 0.062W
3176	4822 051 30103	10kΩ 5% 0.062W
3190	4822 053 10122	1.2kΩ 5% 1W
3191	4822 053 10122	1.2kΩ 5% 1W
3192	4822 053 10122	1.2kΩ 5% 1W
3506	4822 051 30471	47Ω 5% 0.062W
3513	4822 051 30333	33kΩ 5% 0.062W
3528	4822 051 30472	4.7Ω 5% 0.062W
3529	4822 051 30101	100Ω 5% 0.062W
3531	4822 051 30153	15kΩ 5% 0.062W
3532	4822 051 30472	4.7Ω 5% 0.062W
3538	4822 051 30101	100Ω 5% 0.062W
3540	4822 051 30222	2.2kΩ 5% 0.062W
3541	4822 051 30222	2.2kΩ 5% 0.062W
3542	4822 051 30103	10kΩ 5% 0.062W
3543	4822 051 30223	22kΩ 5% 0.062W
3544	4822 051 30221	220Ω 5% 0.062W
3560	4822 051 30682	6.8Ω 5% 0.062W
3561	4822 051 30392	3.9Ω 5% 0.063W 0603
3562	3198 021 34780	4.7Ω 5% 0603
3999	4822 051 30223	22kΩ 5% 0.062W
3999	4822 117 12925	47kΩ 1% 0.063W 0603
9001	3198 036 90010	Wire 0.58mm
9020	4822 051 30008	Jumper 0603
9022	3198 036 90010	Wire 0.58mm
9024	4822 051 30008	Jumper 0603
9040	3198 036 90010	Wire 0.58mm
9041	4822 051 20008	Jumper 0805
9042	4822 051 20008	Jumper 0805
9044	4822 051 20008	Jumper 0805
9045	3198 036 90010	Wire 0.58mm
9051	3198 036 90010	Wire 0.58mm
9052	3198 036 90010	Wire 0.58mm
9053	3198 036 90010	Wire 0.58mm
9054	3198 036 90010	Wire 0.58mm
9055	3198 036 90010	Wire 0.58mm
9056	3198 036 90010	Wire 0.58mm
9057	3198 036 90010	Wire 0.58mm
9058	3198 036 90010	Wire 0.58mm
9059	3198 036 90010	Wire 0.58mm
9060	3198 036 90010	Wire 0.58mm
9061	3198 036 90010	Wire 0.58mm
9062	3198 036 90010	Wire 0.58mm
9063	3198 036 90010	Wire 0.58mm
9064	3198 036 90010	Wire 0.58mm
9065	3198 036 90010	Wire 0.58mm
9066	3198 036 90010	Wire 0.58mm
9067	3198 036 90010	Wire 0.58mm
9068	3198 036 90010	Wire 0.58mm
9069	3198 036 90010	Wire 0.58mm
9070	3198 036 90010	Wire 0.58mm
9071	3198 036 90010	Wire 0.58mm
9072	3198 036 90010	Wire 0.58mm
9073	3198 036 90010	Wire 0.58mm
9074	3198 036 90010	Wire 0.58mm
9075	3198 036 90010	Wire 0.58mm
9076	4822 051 30008	Jumper 0603
9077	4822 051 30008	Jumper 0603
9080	4822 051 20008	Jumper 0805
9081	4822 051 20008	Jumper 0805
9101	3198 036 90010	Wire 0.58mm
9104	4822 051 30008	Jumper 0603
9105	4822 051 30008	Jumper 0603
9112	3198 036 90010	Wire 0.58mm
9120	4822 051 30008	Jumper 0603

5018	2422 536 00945	10µF 20%
5019	2422 536 00945	10µF 20%
5102	4822 526 10704	Bead 50 Ω at 100MHz
5103	4822 526 10704	Bead 50 Ω at 100MHz
5104	4822 157 11411	Bead 80Ω at 100MHz
5105	2422 549 43769	Bead 30Ω at 100MHz
5106	4822 157 11441	22µH 5%
5108	4822 526 10704	Bead 50 Ω at 100MHz
5110	4822 157 71736	10µH 5%
5500	2422 531 00117	BS25511-00
5504	2422 536 00776	33µH 10%
5505	4822 157 11411	Bead 80Ω at 100MHz
5506	4822 157 11411	Bead 80Ω at 100MHz
5507	2422 536 00433	15µH 10%

6103	5322 130 31938	BYV27-200
6104	9340 548 69115	PDZ27B
6105	4822 130 11522	UDZ15B
6106	9340 548 67115	PDZ22B
6108	4822 130 80622	BAT54
6114	5322 130 31938	BYV27-200
6115	4822 130 80622	BAT54
6116	3198 020 55680	BZX384-C5V6
6120	4822 130 11397	BAS316
6121	4822 130 11397	BAS316
6122	9322 129 34685	BZM55-C3V9
6133	4822 130 11397	BAS316
6140	4822 130 83755	BYW36
6142	4822 130 80622	BAT54
6144	4822 130 11397	BAS316
6147	9322 208 44685	BZG05C6V8
6148	4822 130 11397	BAS316
6149	3198 020 55680	BZX384-C5V6
6150	9340 292 50135	BZG03-C200
6151	9340 548 71115	PDZ33B
6153	9340 292 50135	BZG03-C200
6156	4822 130 11397	BAS316
6504	9322 203 12673	BYV27-600
6505	9322 161 78682	SB360L-7024
6531	4822 130 11522	UDZ15B
6532	4822 130 11397	BAS316
6540	4822 130 80622	BAT54
6562	9340 548 67115	PDZ22B

7100	3198 010 42320	BC857BW
7101	9340 219 30115	BC817-25W
7102	9322 160 34687	FQPF3N60
7105	3198 010 42320	BC857BW
7140	3198 010 42310	BC847BW
7150	9322 149 04682	TCET1102
7501	9322 149 04682	TCET1102
7505	3198 010 42320	BC857BW
7506	3198 010 42310	BC847BW
7507	3198 010 42310	BC847BW
7509	3198 010 42310	BC847BW
7531	9340 436 50115	BSP030
7532	3198 010 42310	BC847BW
7560	9340 219 30115	BC817-25W

11. Revision List

Manual xxxx xxx xxxx.0

- First release.

Manual xxxx xxx xxxx.1

- **Chapter 1:** Description of some connections added and/or changed.
- **Chapter 3:** Description of software upgrade removed.
- **Chapter 3:** Description of Hotel Mode added.
- **Chapter 5:** Remark about Hotel Mode added.
- **Chapter 5:** Display option code table updated.
- **Chapter 5:** SSB service kit table updated.
- **Chapter 8:** Option code overview updated.
- **Chapter 8:** Option code table added.
- **Chapter 9:** SSB cell layout updated.
- **Chapter 10:** Spare parts list added.
- Some minor changes.

Service
Service
Service

15HF5234/10	20PFL4112S/60	26HF5444/10
15HF5234C/10	20PFL5122/01	26PF5321D/37
15PF5121/01	20PFL5122/58	26PF7321/12
15PF5121/58	20PFL5122/77	26PF7521D/10
20HF5234/10	23HF5474/10	26PF7521D/12
20HF5474/10	23PF5321/01	26PF7521D/32
20PF5121/01	23PF5321/58	26PFL5322/77
20PF5121/58	26HF5334D/27	26PFL5322/78

Styling Sheet

Mechanical Parts List

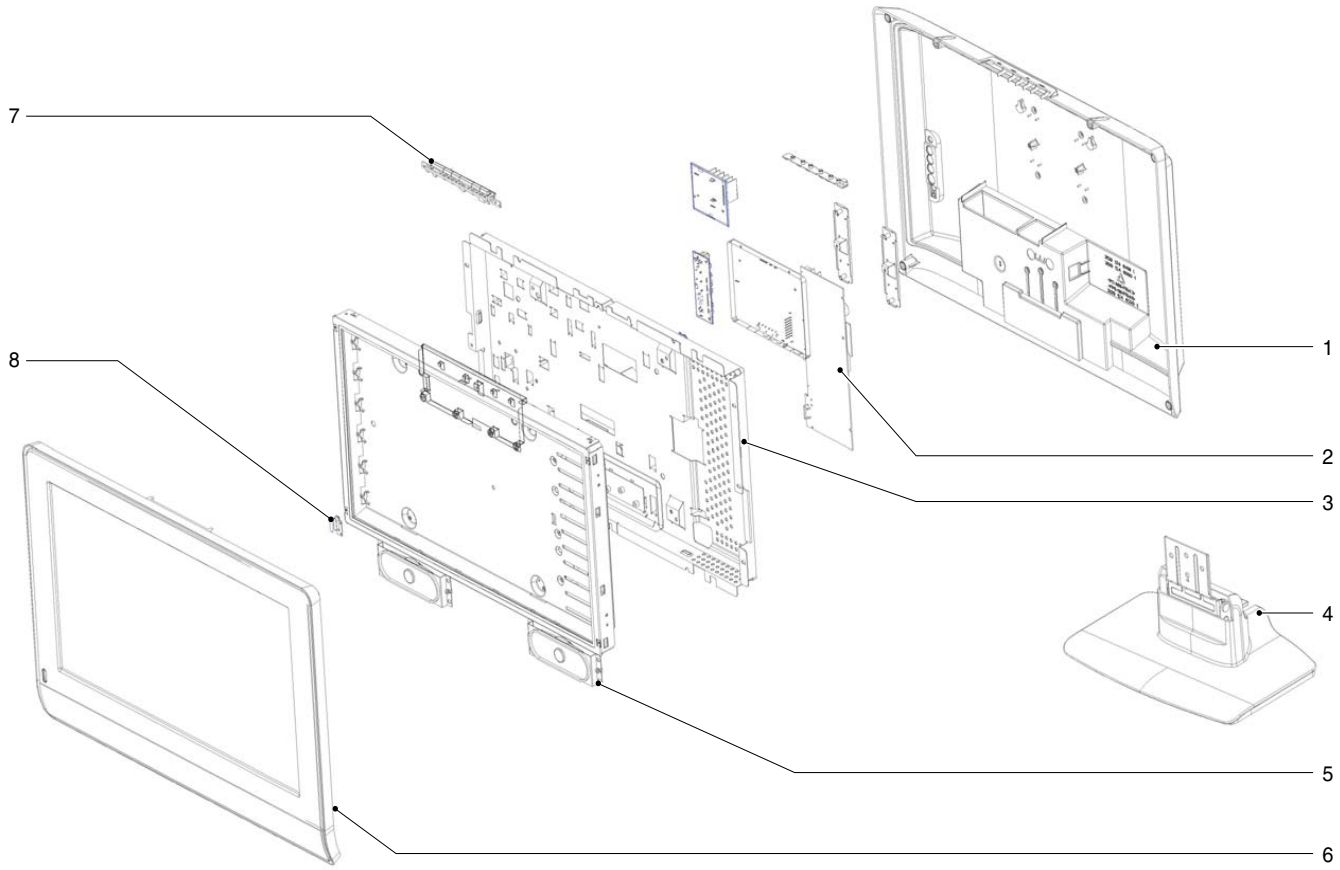

ME5P_2006_29_A_FS
250706

©Copyright 2006 Philips Consumer Electronics B.V. Eindhoven, The Netherlands.
All rights reserved. No part of this publication may be reproduced, stored in a retrieval system or transmitted, in any form or by any means, electronic, mechanical, photocopying, or otherwise without the prior permission of Philips**.**

Safety regulations require that the set is restored to its original condition and that parts which are identical with those specified are used.

PHILIPS

ME5P Styling

Pos. Number	Item number	12NC	Description	15HF5234/10	15HF5234C/10	15PF5121/01 AUO	15PF5121/01 QDI	15PF5121/58 AUO	15PF5121/58 QDI	20HF5234/10	20HF5474/10	20PF5121/01 AUO	20PF5121/01 LPL	20PF5121/58 AUO	20PF5121/58 LPL	20PFL4112S/60	20PFL5122/01	20PFL5122/58	20PFL5122/77	23HF5474/10	23PF5321/01	23PF5321/58	26HF5334D/27	26HF5444/10	26PF5321D/37	26PF7321/12 (AUOP)	26PF7321/12 (LGPH)	26PF7521D/10	26PF7521D/12	26PF7521D/32	26PFL5322/77 (LPL)	26PFL5322/78 (LPL)
1	0933	3143 027 63871	Rear cover 15"				x																									
1	X371	3127 107 50331	Rear cover 15"			x		x																								
1	X371	3127 107 50421	Rear cover 15"	x	x																											
1	0008	3139 124 64921	Rear cover 20"													x																
1	0933	3143 027 63891	Rear cover 20"									x	x	x	x																	
1	X371	3127 107 50301	Rear cover 20"							x																						
1	X371	3127 107 50431	Rear cover 20"								x																					
1	0020	9965 200 31381	Rear cover 20"														x	x														
1	0008	3106 104 30331	Rear cover 20"																x													
1	0933	3143 027 63912	Rear cover 23"																		x	x										
1	X371	3127 107 50401	Rear cover 23"																	x												
1	0011	3104 308 18591	Rear cover 26"																													
1	0941	3121 237 57121	Rear cover 26"																				x		x							
1	X371	3127 107 50441	Rear cover 26"																					x								
1	X371	3143 027 64321	Rear cover 26"																							x	x					
1	X371,0933	3143 027 64331	Rear cover 26"																									x	x	x		
1	0012	3139 124 69571	Rear cover 26"																													x
1	0012	3106 108 04001	Rear cover 26"																												x	
2	1188	3122 429 70011	PSU 20" BL6L60P3																x													
2	1188	3341 101 20101	PSU 20" BL6L60P3							x						x																
2	1188	3341 101 20171	PSU 20"NHC BL6L60P7								x																					
2	0270	9965 200 31396	PSU 20PFL5122														x	x														
2	1188	3139 128 78371	PSU 26" Open Frame DPS-160NP																							x	x	x	x	x		
2	1188	3122 137 23191	PSU 26"PLCD170P2																					x		x	x	x	x	x		
2	1005	3106 108 04001	PSU 2632 GLOBAL DEL																												x	
2	1005	3139 128 78452	PSU 2632 GLOBAL DEL																													x
2	1188	3139 128 77301	PSU DAC-12M018B	x	x		x		x																							
2	1188	3139 128 78081	PSU DAC-12M018C			x		x																								
2	1188	3139 128 77611	PSU DAC-12M019A										x		x																	
2	1188	3139 128 77681	PSU DAC-12M019C									x		x																		
2	1188	3122 137 23071	PSU PLCD150P1																	x												
2	1188	3122 137 23361	PSU PLCD150P1 C2K6																	x	x	x										
2	1188	3122 137 23241	PSU PLCD170P4																				x		x							
3	1099	9322 225 63682	LCD panel A201SN02V4									x		x																		
3	1099	9322 220 99682	LCD panel LC201V02-A3KB										x		x																	
3	1099, 0200	9322 242 65682	LCD panel LC201V02-SDB1							x	x					x	x	x	x													
3	1099	9322 221 01682	LCD panel LC260WX2-SL01																						x							
3	1099, 1004	9322 234 13682	LCD panel LC260WX2-SLB2																				x	x			x	x	x	x	x	x
3	1099	9322 229 22682	LCD panel QD15XL16 REV01	x	x		x		x																							
3	1099	9322 232 69682	LCD panel QD23HL02-REV01(03)																	x	x	x										
3	1099	9322 229 53682	LCD panel T150XG01 V2			x		x																								
3	1099	9322 231 90682	LCD panel T260XW02V4																							x						
4	0210	3139 178 16031	Metal stand	x		x	x	x	x																							
4	0212	3139 178 16041	Metal stand							x	x	x	x	x	x	x				x	x	x										
4	0210	3139 178 15651	Metal stand																				x	x	x	x	x	x	x	x		
4	0030	9965 100 04530	Metal stand														x	x														
4	0221	3106 101 29251	Stand arm																												x	x
4	0234	3106 101 29241	Stand arm																x													
4	0220	3106 104 30261	Stand base																												x	x
4	0232	3106 104 90041	Stand base																x													
4	0233	3106 104 30241	Stand neck																x													
5	5213	2422 264 00579	Loudspeaker 4R 5W	x	x	x	x																									
5	5213	2422 264 00616	Loudspeaker 6R 15W																												x	x
5	0210	9965 200 31423	Loudspeaker 8R 10W														x	x														
5	5213	2422 264 00485	Loudspeaker 8R 15W																				x	x	x	x	x	x	x			
5	5213	2422 264 00587	Loudspeaker 8R 15W																									x	x	x		
5	5213	2422 264 00536	Loudspeaker 8R 5W							x	x	x	x	x	x	x			x	x	x	x										

ME5P Styling

Pos. Number	Item number	12NC	Description	15HF5234/10	15HF5234C/10	15PF5121/01 AUO	15PF5121/01 QDI	15PF5121/58 AUO	15PF5121/58 QDI	20HF5234/10	20HF5474/10	20PF5121/01 AUO	20PF5121/01 LPL	20PF5121/58 AUO	20PF5121/58 LPL	20PFL4112S/60	20PFL5122/01	20PFL5122/58	20PFL5122/77	23HF5474/10	23PF5321/01	23PF5321/58	26HF5334D/27	26HF5444/10	26PF5321D/37	26PF7321/12 (AUOP)	26PF7321/12 (LGPH)	26PF7521D/10	26PF7521D/12	26PF7521D/32	26PFL5322/77 (LPL)	26PFL5322/78 (LPL)
6	0003	3139 187 50791	Deco front 26"																												x	x
6	0931	3143 027 63862	Front cabinet 15"				x		x																							
6	X370	3127 107 60541	Front cabinet 15"	x	x	x		x																								
6	X370	3127 107 60691	Front cabinet 20"									x		x																		
6	X370	3127 107 60532	Front cabinet 20"							x		x	x	x	x																	
6	X370	3127 107 60621	Front cabinet 20"								x																					
6	X370, 0931	3143 027 63882	Front cabinet 20"													x																
6	0010	9965 100 04469	Front cabinet 20"														x	x														
6	0011	3139 187 54881	Front cabinet 20"																x													
6	0931	3143 027 63903	Front cabinet 23"																		x	x										
6	X370	3127 107 60603	Front cabinet 23"																	x												
6	0004	3139 187 50811	Front Cabinet 26"																												x	x
6	0940	3121 237 56441	Front cabinet 26"																				x		x							
6	X370	3127 107 60711	Front cabinet 26"																					x								
6	X370	3143 027 64312	Front cabinet 26"																							x	x					
6	X370, 0931	3143 027 64392	Front cabinet 26"																									x	x	x		
7	0025	3106 107 79081	Control knob assy																x												x	x
7	1014	3139 267 27821	Top Control Buttons																						x							
7	1114	3139 267 23521	Top Control Buttons	x	x	x	x	x	x	x	x	x	x	x	x	x				x	x	x										
7	1114	3139 267 23941	Top Control Buttons																					x							x	
7	1114	3139 267 17541	Top Control Buttons																				x									
7	1114	3139 268 02131	Top Control Buttons																							x	x	x	x			
7	0050	9965 100 04470	Top Control Buttons														x	x														
8	0041	3139 124 64901	Lens	x	x	x	x	x	x	x	x	x	x	x	x	x				x	x	x	x	x	x	x	x	x	x	x		
8	0179	3106 104 29811	Lens																												x	x
	0121	3139 123 11761	Cleaning cloth			x	x	x	x			x	x	x	x		x	x			x	x	x		x	x	x	x	x	x	x	x
	0188	3139 124 67021	Cover Bracket for Digital Module																									x	x	x		
	8102	3139 131 06741	FFC cable								x		x																			
	8404	3139 131 06451	LVDS cable	x	x	x	x	x	x																							
	8404	3139 131 06101	LVDS cable																	x	x	x										
	8101	3139 131 06411	LVDS cable								x		x																			
	8402	3139 131 03981	LVDS cable							x	x		x		x	x																
	8402	3139 131 03982	LVDS cable														x	x	x						x							
	8P06	3139 131 07511	LVDS cable																				x		x							
	8P06	3139 131 06001	LVDS cable																					x		x	x	x	x	x		
	8G51	3139 131 08282	LVDS cable 30P/180/30P FI-X																												x	x
	8188	2422 070 98151	Mains cord EU	x	x	x	x	x	x	x	x	x	x	x	x	x				x	x	x						x	x			
	8188	4622 001 56774	Mains cord EU																					x		x	x			x		
	8191	2422 070 98259	Mains cord EU														x	x														
	8187	9965 000 07586	Mains cord UK	x	x	x	x			x	x	x	x							x	x							x				
	8187	4822 321 10886	Mains cord UK																					x								
	8187	2422 070 98208	Mains cord UL																				x		x							
	8191, 8187	3101 107 97701	Mainscord ARG																x												x	
	8191	2422 070 00062	Mainscord BRZ																													x
	1910	3139 238 13171	Remote control RC1553814/01																							x	x					
	1910	3139 238 11771	Remote control RC1683803	x	x	x	x	x	x	x		x	x	x	x	x					x	x										
	1085	3139 238 07951	Remote control RC19335018/01								x									x				x								
	1910	3139 238 08161	Remote control RC19335021/01																x													
	1085	3139 238 14291	Remote control RC2023606/01																												x	x
	0285	9965 200 31431	Remote control RC2023615/01														x	x														
	1910	3139 238 12241	Remote control RC4346/01B																				x		x							
	1910	3139 238 12971	Remote control RC4347/01																									x	x	x		
	0061	9965 200 31392	SSB Bracket Analog														x	x														
	0269	3139 128 78051	Stand screw			x	x	x	x																							
	0269	3139 128 78061	Stand screw	x						x	x	x	x	x	x	x				x	x	x										
	0269	3139 128 78031	Stand screw																				x	x	x	x	x	x	x	x		
	0084	3139 121 32041	Vesa plate																												x	
	0222	3139 121 29651	Vesa plate																x													

Service
Service
Service

AUO (ACER UNIP.) LCD 2k7

T260XW02V400, T260XW02V401
T296XW01V0, T296XW01V3
T315XW01V5
T370XW01V1
T420HW01V2, T420XW01V8

Service Manual

Contents **Page**

1. Technical Specifications, Connections, and Chassis Overview 2
2. Safety Instructions, Warnings, and Notes 3
3. Directions for Use 4
4. Mechanical Instructions 5
5. Service Modes, Error Codes, and Fault Finding 20
6. Block Diagrams, Test Point Overviews, and Waveforms 22
7. Circuit Diagrams and PWB Layouts 22
8. Alignments 22
9. Circuit Descriptions, Abbreviation List, and IC Data Sheets 22
10. Spare Parts List 22
11. Revision List 22

©Copyright 2007 Philips Consumer Electronics B.V. Eindhoven, The Netherlands.
All rights reserved. No part of this publication may be reproduced, stored in a retrieval system or transmitted, in any form or by any means, electronic, mechanical, photocopying, or otherwise without the prior permission of Philips.

Published by MW 0770 BU CD Customer Service Printed in the Netherlands Subject to modification EN 3122 785 16901

PHILIPS

1. Technical Specifications, Connections, and Chassis Overview

Index of this chapter:

1.1 Introduction
1.2 General
1.3 Specifications

Note:

- Specifications are indicative (subject to change).

1.1 Introduction

In this Service Manual you will find all necessary information to perform the Board Level Repair (= board swap) scenario on LCD panels. These LCD repair manuals are created per brand, and they will contain all necessary information for the different panels used in Philips flat LCD TVs.

1.2 General

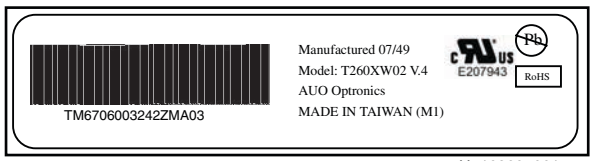

H_16900_001.eps
260607

Figure 1-1 AUO board labelling (example)

1.3 Specifications

Below find attached the data sheets of the different LCD panels. Click on the “model number” to open.

- Model T260XW02V4
- Model T296XW01V0
- Model T296XW01V3
- Model T315XW01V5
- Model T370XW01V1
- Model T420HW01V2
- Model T420XW01V8

2. Safety Instructions, Warnings, and Notes

Index of this chapter:

2.1 General
2.2 Safety Precautions
2.3 Servicing Precautions

2.1 General

Notes:

- Only authorised persons should perform servicing of this module.
- When using/handling this unit, pay special attention to the LCD Module: it should not be enforced into any other way then next rules, warnings, and/or cautions.
- **"Warning"** indicates a hazard that may lead to death or injury if the warning is ignored and the product is handled incorrectly.
- **"Caution"** indicates a hazard that can lead to injury or damage to property if the caution is ignored and the product is handled incorrectly.

2.2 Safety Precautions

2.2.1 Warning

- Do not supply a voltage higher than specified to this product. This may damage the product or can create hazardous situations.
- Do not use this product in locations where the humidity is extremely high, where it may be splashed with water, or where flammable materials surround it.
- Do not install or use the product in a location that does no satisfy specified environmental conditions. This may damage the product or can create hazardous situations.
- If a foreign substance (such as water, metal, or liquid) gets inside the product, immediately turn “OFF” the power. Continuing to use the product may cause electric shock or can create hazardous situations.
- If the product emits smoke and abnormal smell, or makes an abnormal sound, immediately turn “OFF” the power. Continuing to use the product may cause electric shock or can create hazardous situations.
- Do not (dis)connect the connector while power to the product is “ON”. It takes some time for the voltage to drop to a sufficiently low level after the power has been turned “OFF”. Confirm that the voltage has dropped to a safe level before (dis)connecting the connector.
- Do not pull out or insert the power cable from/to an outlet with wet hands. It may cause electric shock.
- If the power cable is damaged, or if the connector is loose, do not use the product, otherwise, this can lead to hazardous situations or may cause electric shock.
- The LCD Backlight Inverter unit uses a high voltage for the lamps. Keep the cautions concerning electric shock and do not touch the device circuitry handling the inverter unit. And because the capacitors of the device circuitry may remain charged at the moment of Power “OFF”, standing for 1 minute is required in order to discharge the device circuitry.

2.2.2 Caution

- Do not place this product in a location that is subject to heavy vibration, or an unstable surface such as an inclined surface. The product may fall off or fall over, causing injuries.
- Before disconnecting cable from the product, be sure to turn off the power. Be sure to hold the connector when disconnecting cables. Pulling a cable with excessive force may cause the core of the cable to be exposed or break the cable, and this can lead to fire or electric shock.
- This product contains glass. If shock, vibration, heat or distortion is applied to the product, the glass may be broken.
- If glass surface of the display breaks or is scratched, do not touched the broken pieces or the scratched with bare hands. You may be injured.
- LCD Module requires to be handled with special care. LCD Module is not to be touched with metal or hard materials. Must not be stressed by heat or mechanical impact.
- There are some particular components on the rear panel of this product. Skin contact with these components may cause an electric shock. So, handle with care.
- While moving the product, be sure to turn off the power, disconnect all cables and watch your step. Dropping the product may cause injuries from electric shock. So, while moving the product handle with care.
- When cleaning the panel is necessary, wipe it with a soft and moistened cloth a neural detergent. Caution on connector area. Do not use chemicals such as thinner or benzene.
- LCD Module emits heat from the Lamp, Backlight lamp, and component parts. Therefore, the environmental temperature must not exceed 50 deg. C. LCD Module Backlight Inverter system is driven by high voltage, so it must avoid conductive materials.
- If repairing components with a lead line, high voltage or high temperature components must be put out from a lead line and fix.
- Do not place an object on the surface of the display. The glass may break or be scratched.
- This product may be damaged if it is subject to excessive stresses (such as excessive voltage, current, or temperature). The absolute maximum ratings specify the limits of these stresses.
- Do not cover or wrap with any covering materials while power is applied to the product.
- This product is made from various materials such as glass, metal, and plastic. When discarding it, be sure to contact a purchase place.
- If a discrepancy occurs due to any arbitrary modification or disassembly, supplier is not responsible for function, quality or other items.
- Within the warranty period, general faults may be charged for depending on responsibility for the faults. You handle with care

2.3 Servicing Precautions

A colour TFT LCD Module can easily be damaged by both electrical and mechanical stresses. Users therefore, are requested to follow the “Servicing precautions of colour TFT LCD Module” on the following.

2.3.1 System Assembler

- **Follow the power sequence:** An abnormal power sequence may cause critical malfunction or electrical damage.
- **Prevent physical stress.**
- **Prevent overheat:**
  - High temperatures on the surface of the screen may cause poor quality. Please use the LCD Module on the specified temperatures.
  - Low temperatures (under 10 deg. C) makes the LCD Module respond slowly, make the Backlight worse operated, and will shorten very much the lifetime accordingly.
- **Keep LCD Module dust-free**: The LCD Module is sensitive against dust; it can cause visual or functional problems.

- **Do not touch TCP area:** Do not touch TCP area at any case. It can cause Driver IC cracks, film cracks, etc. The TCP is the weakest point of the LCD Module.
- **Do not pull Backlight wire:** Please do not pull the Backlight wire, as it can cause the wire to become disconnected or damaged.
- **Check the connections of the Inverter & Backlight connectors:** Incomplete connection can cause burnt in Backlight connectors or damage the inverter.
- **Handle with care:**
  – Please do not drop, bend, or hit the LCD Module.
  – Physical stress can cause defects as broken panels.
- **Keep mounting screw length and motor driver's torque:** Strong motor driver's torque can make a mechanical defect on LCD Module. Please keep within the specifications.
- **Do not operate for a long time under the same pattern:** Operating the LCD Module for a long time with the same video pattern can cause image persistence and can eventually damage it.
- **Defective panels must also be handled with care:**
  – To prevent making other defects, please handle the defective LCD Module as a good one.
  – Defective LCD Modules must be repaired.
- **Do not stack LCD Modules:** The LCD Module consists of fragile components such as TCPs or Glasses. Stacking the LCD Modules can cause undesired defects.
- **Do not provide strong pressure at connecting:** Strong pressure can transfer the force to the TCP, which is the weakest part of the LCD Module. It eventually can make the TCP crack or lead to other unexpected defects.
- **Let the Backlight Wire at the backside of the LCD Module:** If let the Backlight wire in front of the LCD Module, the Backlight connector can hurt the surface of the polariser.
- **Never (dis)connect at power "ON":** The LCD Module consists of CMOS components, which are known as weak components against EOS. It can damage the product.
- **Electro-static discharge can make damage:**
  – Semi-assembled product should be handled with wrist strap.
  – Earth human body when handle the LCD Module.
  – Please do not touch the interface connector pin.

2.3.2 System Assembler/End User

- **Keep clean the surface:**
  – Please wear rubber gloves when you touch the surface of the LCD Module screen.
  – Please use soft and anti-static material with n-Hexane as cleaner.
- **Be careful not to make polariser scratch:**
  – Surface of polariser is soft, so it's easily scratched.
  – Please do not touch, press or rub on polariser surface with materials over HB hardness.
- **Be careful with swift temperature and humidity changes:** Swift temperature and or humidity change can make dew condensation or ice, which can cause non-conformance such as malfunctioning.
- **Keep out of water:**
  – Water on in the LCD Module can cause electrical short or corrosion.
  – Please wipe out or dry water carefully.
- **Keep the LCD Module free from corrosive gasses:** Corrosive gas can chemically damage the polariser and the circuitry parts and eventually will cause defects.
- **Keep the suitable temperature and humidity:** High temperatures and high humidity will shorten the lifetime

3. Directions for Use

Not applicable.

4. Mechanical Instructions

Index of this chapter:

4.1 General
4.2 Model T260XW02V4
4.3 Model T296XW01V0 and T296XW01V3
4.4 Model T315XW01V5
4.5 Model T370XW01V1
4.6 Model T420HW01V2
4.7 Model T420XW01V8

4.1 General

4.1.1 Warnings

- Figures can deviate due to the different module executions.
- During repair, place the set face down on a soft surface (e.g. on foam bars as mentioned in next paragraph), in order to prevent damaging the display.
  Note: With some chassis, it is possible to measure and replace the boards while the TV is still on its stand.
- All ICs and many other semiconductors are susceptible to electrostatic discharges (ESD ⚠). Careless handling during repair can reduce life drastically. Make sure that, during repair, you are connected with the same potential as the mass of the set by a wristband with resistance. Keep components and tools also at this same potential.

H_16920_001.eps
060407

Figure 4-1 ESD wristband

- Be careful during measurements in the high voltage section. Never pull plugs out under operation conditions, just to prevent danger caused by electrical sparks.
- Never replace modules or other components while the unit is switched “on”.
- Connectors “to” and “from” the Inverter Boards must be thoroughly connected to avoid any electrical sparks during operation.

4.1.2 Foam Bars

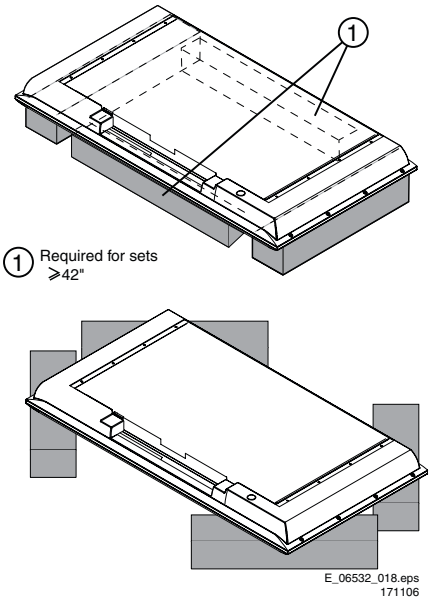

Figure 4-2 Foam bars

The foam bars (order code 3122 785 90580 for two pieces) can be used for all types and sizes of flat displays. See figure “Foam bars” for details. Displays with a size of 42” and larger, require **four** foam bars [1]. Ensure that the foam bars are always supporting the cabinet and **never** only the display.
Caution: Failure to follow these guidelines can seriously damage the display!
By laying the TV face down on the (ESD protective) foam bars, a stable situation is created to perform measurements and alignments. By placing a mirror under the display, you can monitor the screen.

4.1.3 Torque Values

Table 4-1 Recommended Torque Values

Screw Type (cross head)	Recommended Torque Value
M2	2.0 kg*F ± 0.1 kg*F
M2.5	3.0 kg*F ± 0.5 kg*F
M2.6	3.0 kg*F ± 0.5 kg*F
M3	6.0 kg*F ± 0.5 kg*F

4.2 Model T260XW02V4

4.2.1 Control Board

Disassembly

1. Place the panel face down on the foam bars, and locate the Control board.

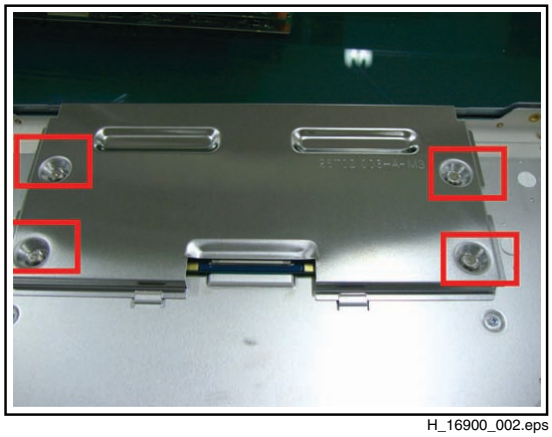

H_16900_002.eps
110707

Figure 4-3 Control board location

2. Remove the four screws of the metal cover: start with the right-down one, then the left-up, one, then the right-up one and finally the left-down one.

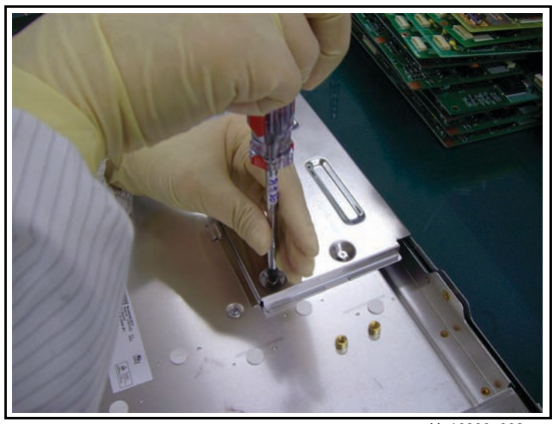

H_16900_003.eps
110707

Figure 4-4 Cover screws removal

3. Lift the cover from the Control board.

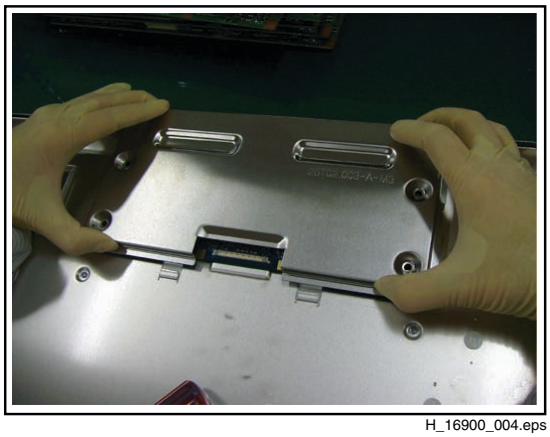

H_16900_004.eps
110707

Figure 4-5 Lift cover

4. Remove the fixation screw of the Control board.

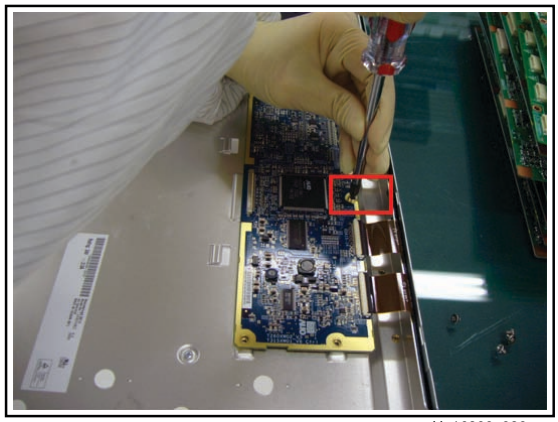

H_16900_026.eps
110707

Figure 4-6 Fixation screw removal

5. Carefully disconnect the flat cable/FPCs from their connectors.

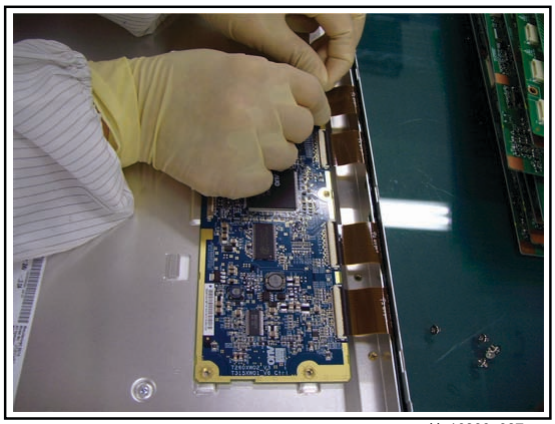

H_16900_027.eps
110707

Figure 4-7 Unplug FPCs

6. You can now remove the Control Board.

Reassembly

To reassemble, perform all processes in reverse order.

Important: Be sure to insert the FPCs correctly: the white line must be invisible when inserted correctly (see figure below).

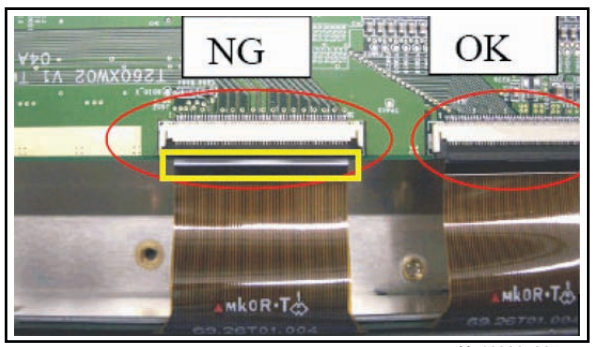

H_16900_007.eps
110707

Figure 4-8 Correct FPC insertion

4.2.2 Inverter Board

Disassembly

1. Place the panel face down on the foam bars, and locate the Inverter board.
2. Remove the cover screws, and remove the cover.

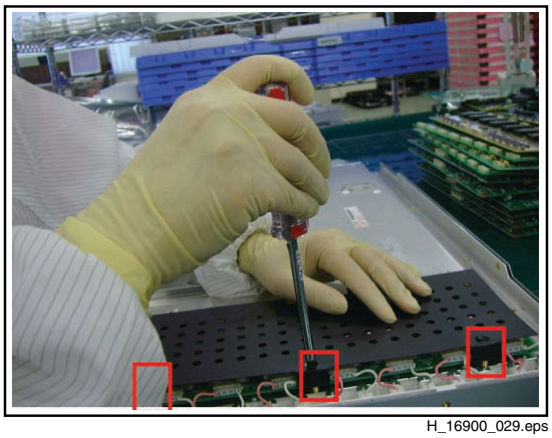

H_16900_029.eps
110707

Figure 4-9 Remove Inverter cover

3. Unplug the lamp connectors on the inverter. Start at the top, and be careful not to pull and drag the wires. The use of a pair of pliers can be helpful.

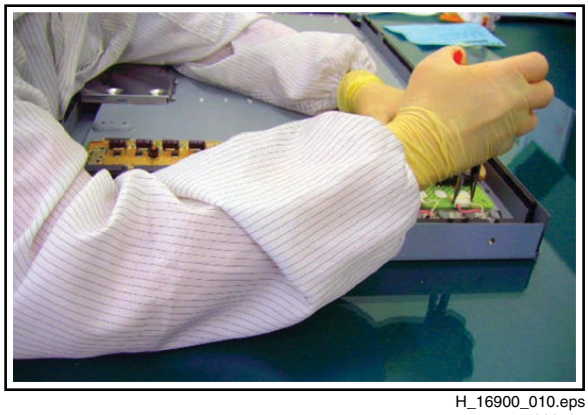

H_16900_010.eps
110707

Figure 4-10 Remove Inverter connectors

4. Remove the Inverter board as shown in figure below.

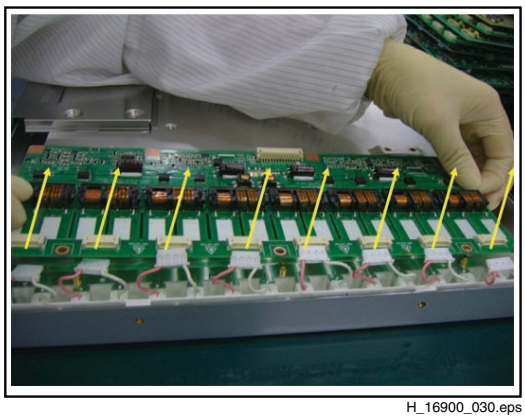

H_16900_030.eps
110707

Figure 4-11 Remove Inverter board

Reassembly

To reassemble, perform all processes in reverse order.

4.3 Model T296XW01V0 and T296XW01V3

4.3.1 Control Board

Disassembly

1. Place the panel face down on the foam bars, and locate the Control board.

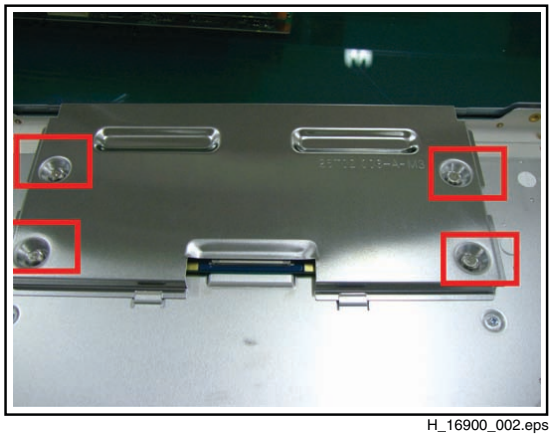

H_16900_002.eps
110707

Figure 4-12 Control board location

2. Remove the four screws of the metal cover: start with the right-down one, then the left-up, one, then the right-up one and finally the left-down one.

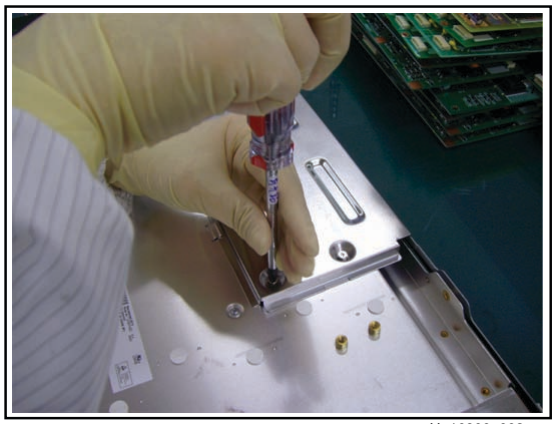

H_16900_003.eps
110707

Figure 4-13 Cover screws removal

3. Lift the cover from the Control board.

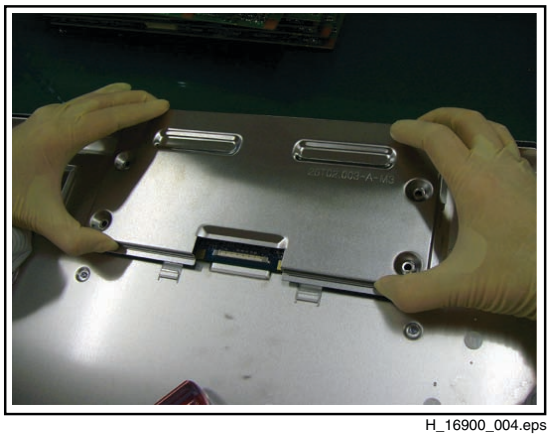

H_16900_004.eps
110707

Figure 4-14 Lift cover

4. Carefully disconnect the flat cable/FPCs from their connectors.

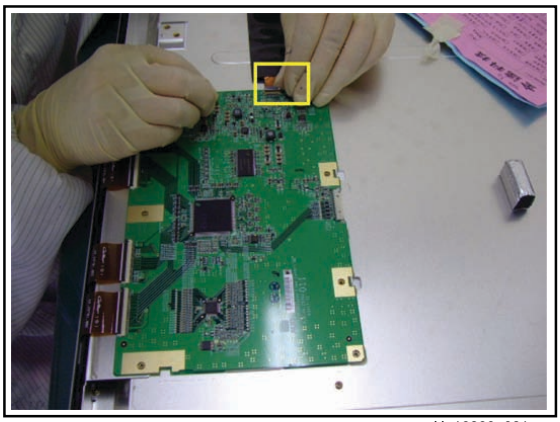

H_16900_021.eps
110707

Figure 4-15 Unplug flat cable

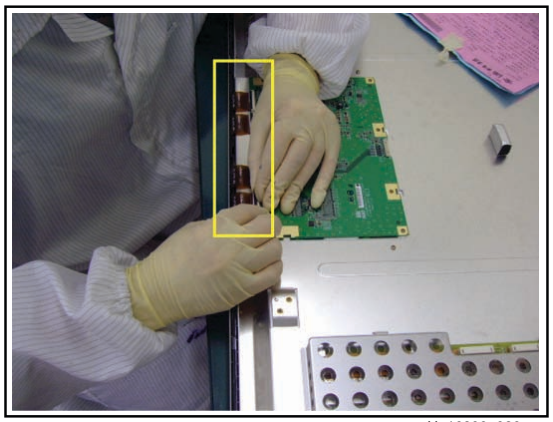

H_16900_020.eps
110707

Figure 4-16 Unplug FPCs

5. You can now remove the Control Board.

Reassembly

To reassemble, perform all processes in reverse order.

Important: Be sure to insert the FPCs correctly: the white line must be invisible when inserted correctly (see figure below).

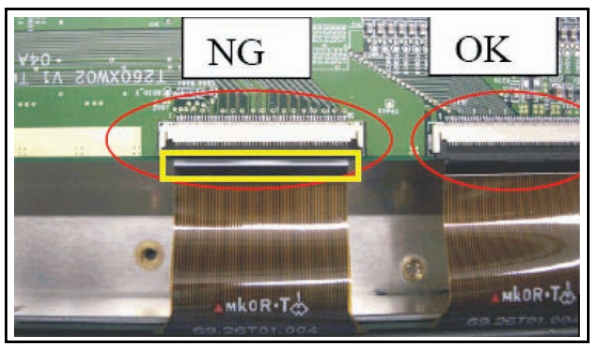

H_16900_007.eps
110707

Figure 4-17 Correct FPC insertion

4.3.2 Inverter Board

Disassembly

1. Place the panel face down on the foam bars, and locate the Inverter board.
2. Remove the cover screws, and remove the cover.

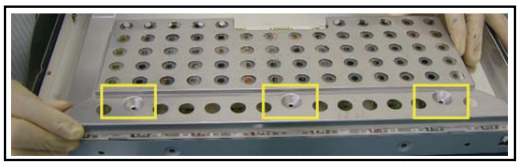

H_16900_024.eps
110707

Figure 4-18 Inverter cover screw locations

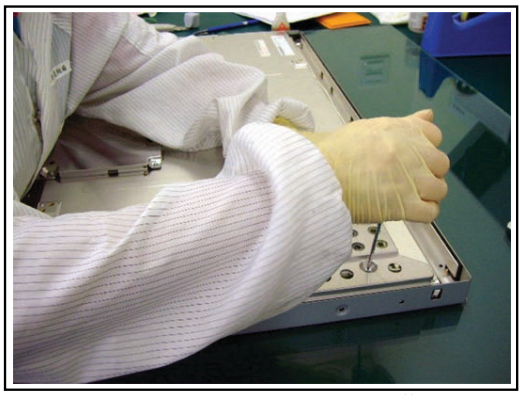

H_16900_023.eps
110707

Figure 4-19 Remove Inverter cover

3. Unplug the lamp connectors on the inverter. Start at the top, and be careful not to pull and drag the wires. The use of a pair of pliers can be helpful.

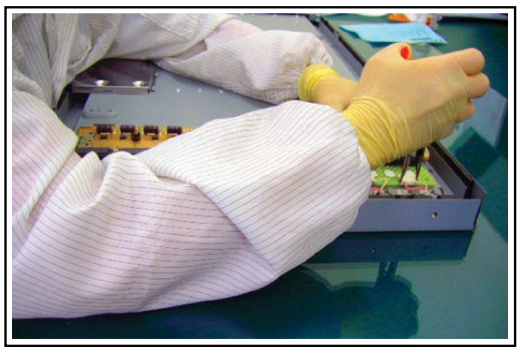

H_16900_010.eps
110707

Figure 4-20 Remove Inverter connectors

4. Unplug the supply connector on the end of the inverter and remove the Inverter board.

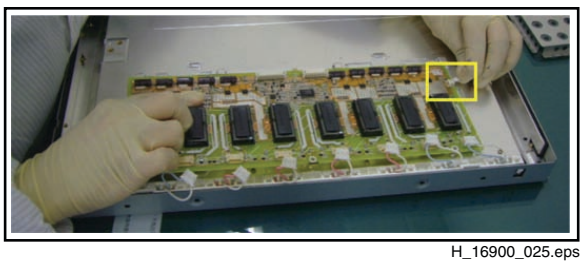

H_16900_025.eps
110707

Figure 4-21 Remove supply connector

Reassembly

To reassemble, perform all processes in reverse order.

4.4 Model T315XW01V5

4.4.1 Control Board

Disassembly

1. Place the panel face down on the foam bars, and locate the Control board.

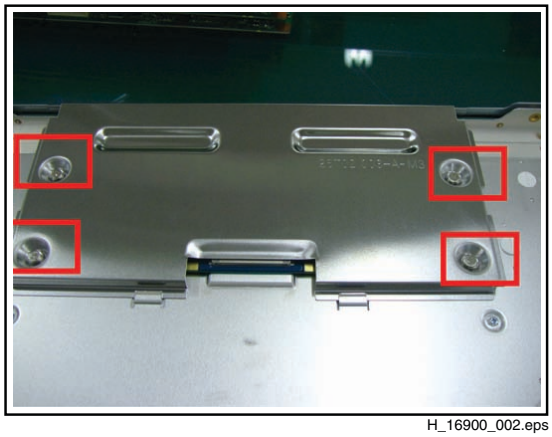

H_16900_002.eps
110707

Figure 4-22 Control board location

2. Remove the four screws of the metal cover: start with the right-down one, then the left-up, one, then the right-up one and finally the left-down one.

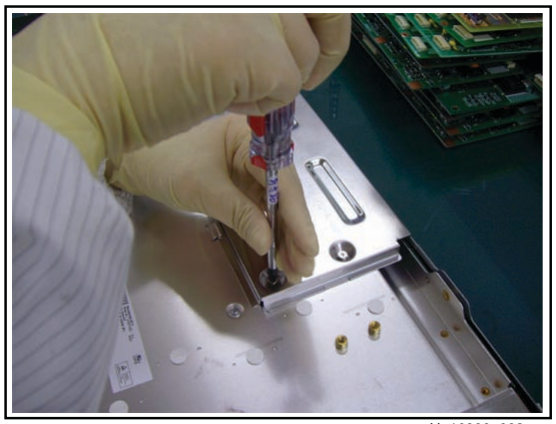

H_16900_003.eps
110707

Figure 4-23 Cover screws removal

3. Lift the cover from the Control board.

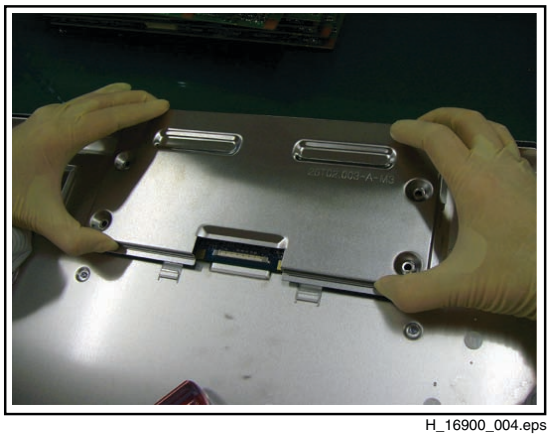

H_16900_004.eps
110707

Figure 4-24 Lift cover

4. Remove the fixation screw of the Control board.

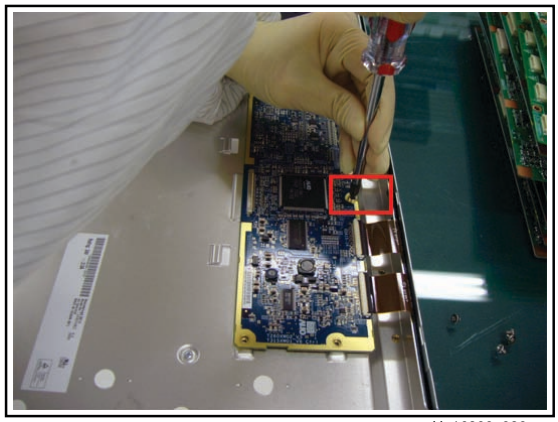

H_16900_026.eps
110707

Figure 4-25 Fixation screw removal

5. Carefully disconnect the flat cable/FPCs from their connectors.

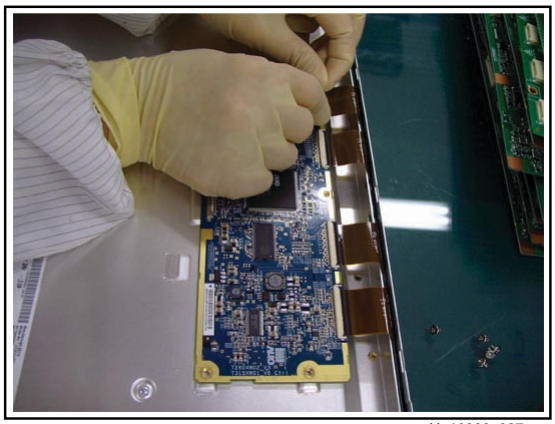

H_16900_027.eps
110707

Figure 4-26 Unplug FPCs

6. You can now remove the Control Board.

Reassembly

To reassemble, perform all processes in reverse order.

Important: Be sure to insert the FPCs correctly: the white line must be invisible when inserted correctly (see figure below).

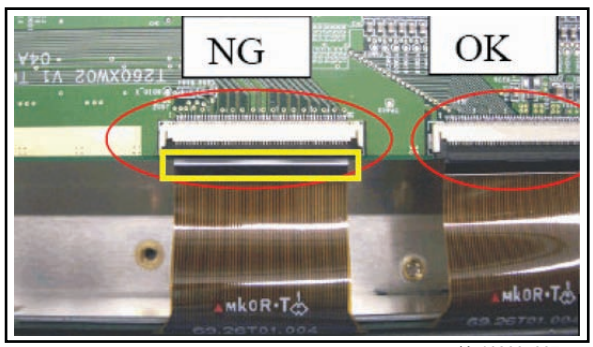

H_16900_007.eps
110707

Figure 4-27 Correct FPC insertion

4.4.2 Inverter Board

Disassembly

1. Place the panel face down on the foam bars, and locate the Inverter board.
2. Remove the cover screws, and remove the cover.

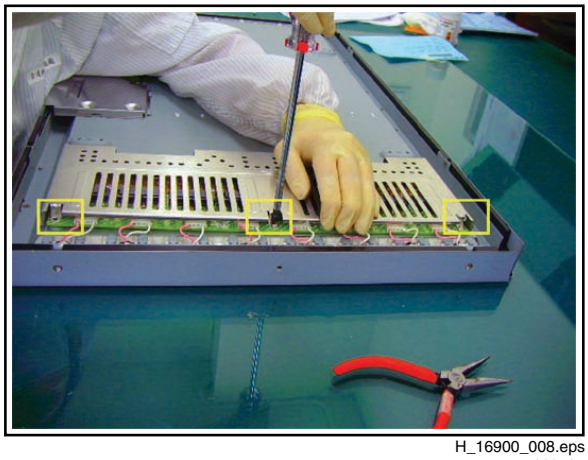

H_16900_008.eps
110707

Figure 4-28 Remove Inverter cover

3. Unplug the lamp connectors on the inverter. Start at the top, and be careful not to pull and drag the wires. The use of a pair of pliers can be helpful.

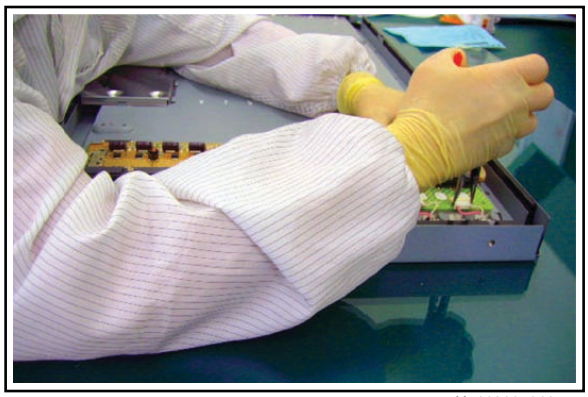

H_16900_010.eps
110707

Figure 4-29 Remove Inverter connectors

4. Remove the Inverter board as shown in figure below.

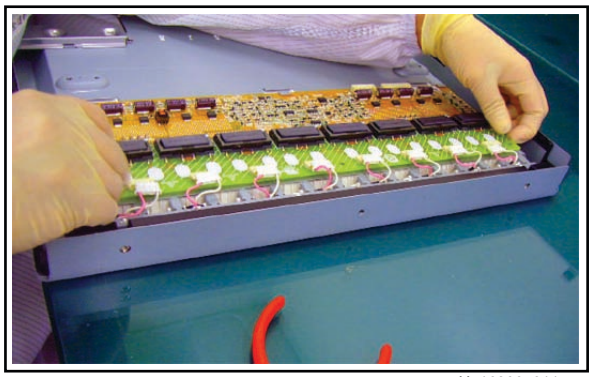

H_16900_011.eps
110707

Figure 4-30 Remove Inverter board

Reassembly

To reassemble, perform all processes in reverse order.

4.5 Model T370XW01V1

4.5.1 Control Board

Disassembly

1. Place the panel face down on the foam bars, and locate the Control board.

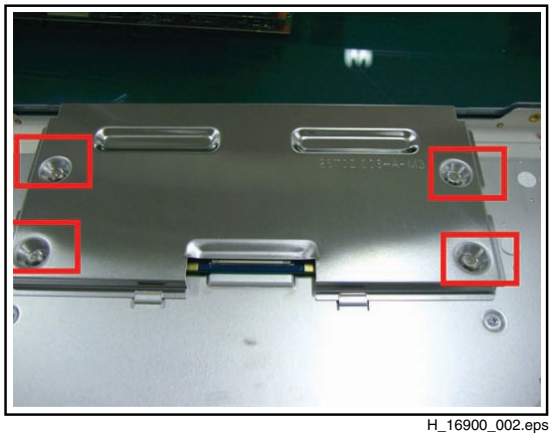

H_16900_002.eps
110707

Figure 4-31 Control board location

2. Remove the four screws of the metal cover: start with the right-down one, then the left-up, one, then the right-up one and finally the left-down one.

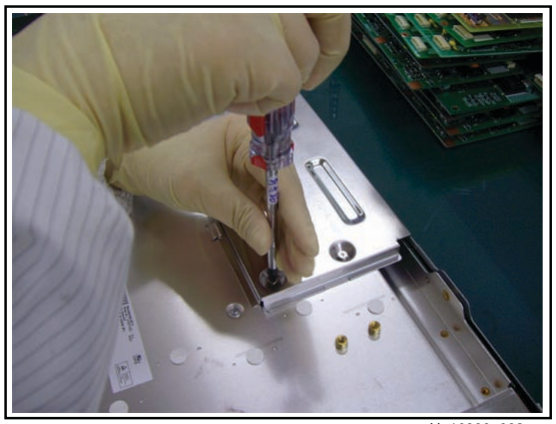

H_16900_003.eps
110707

Figure 4-32 Cover screws removal

3. Lift the cover from the Control board.

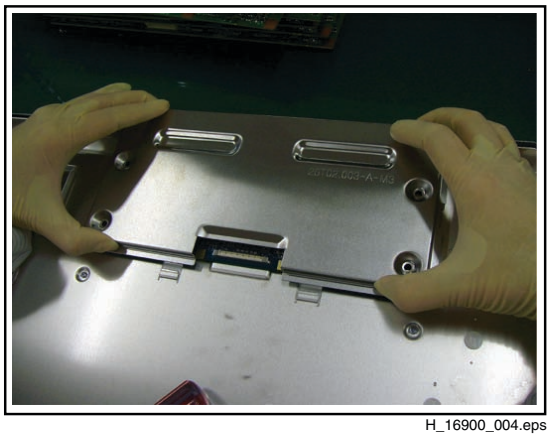

H_16900_004.eps
110707

Figure 4-33 Lift cover

4. Remove the fixation screw of the Control board.

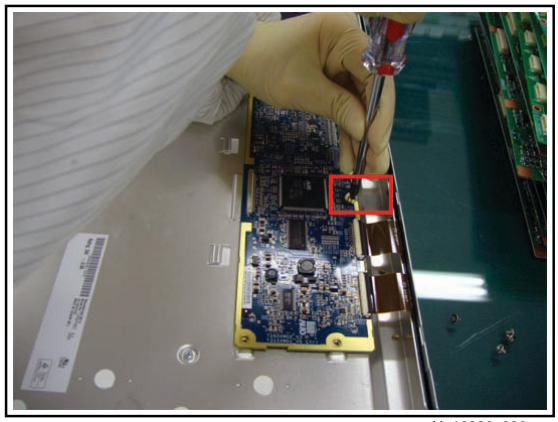

H_16900_026.eps
110707

Figure 4-34 Fixation screw removal

5. Carefully disconnect the flat cable/FPCs from their connectors.

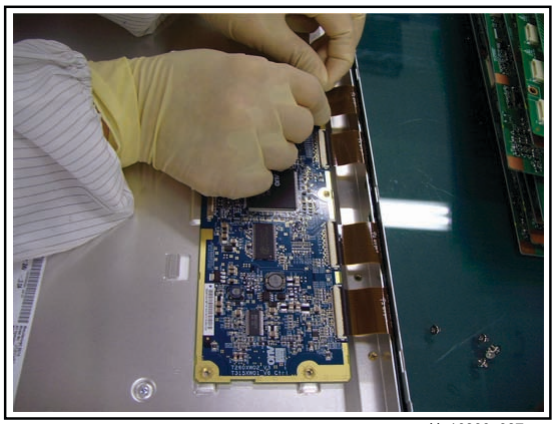

H_16900_027.eps
110707

Figure 4-35 Unplug FPCs

6. You can now remove the Control Board.

Reassembly

To reassemble, perform all processes in reverse order.

Important: Be sure to insert the FPCs correctly: the white line must be invisible when inserted correctly (see figure below).

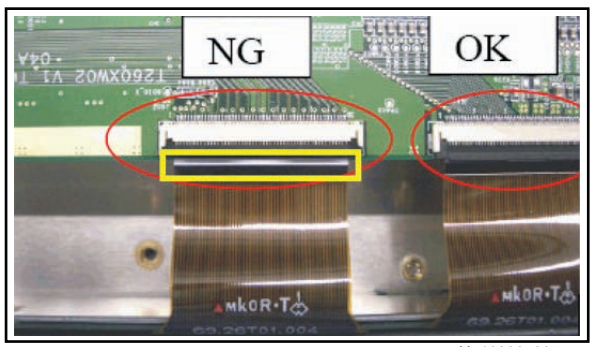

H_16900_007.eps
110707

Figure 4-36 Correct FPC insertion

4.5.2 Inverter Board

Disassembly

1. Place the panel face down on the foam bars, and locate the Inverter board.
2. Remove the cover screws, and remove the cover.

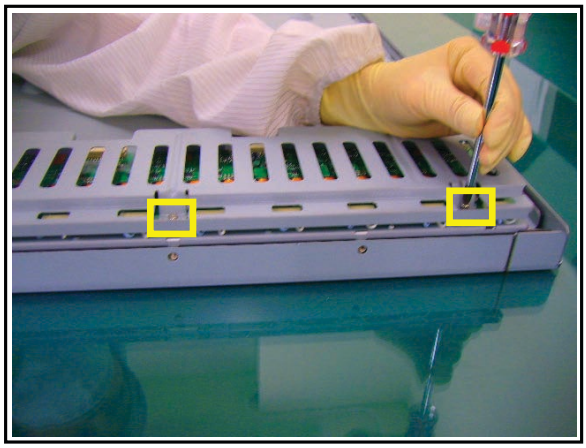

H_16900_031.eps
250707

Figure 4-37 Remove Inverter cover screws

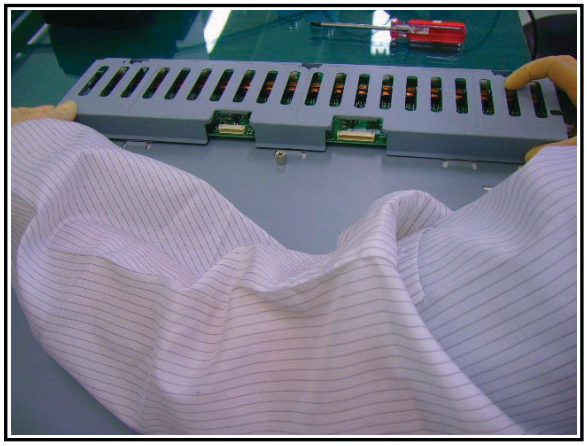

H_16900_032.eps
250707

Figure 4-38 Remove Inverter cover

3. Unplug the lamp connectors on the inverter. Start at the top, and be careful not to pull and drag the wires. The use of a pair of pliers can be helpful.

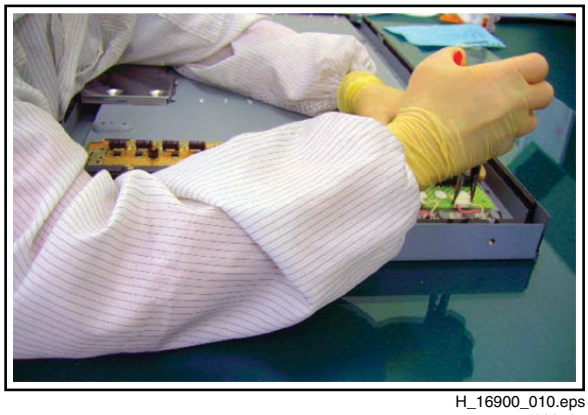

H_16900_010.eps
110707

Figure 4-39 Remove Inverter connectors

4. Remove the Inverter board as shown in figure below.

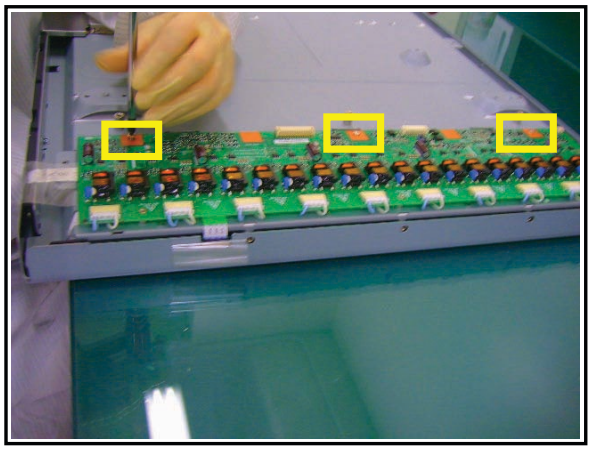

H_16900_033.eps
250707

Figure 4-40 Remove Inverter board

5. Unplug connector CN2 on the Inverter board.

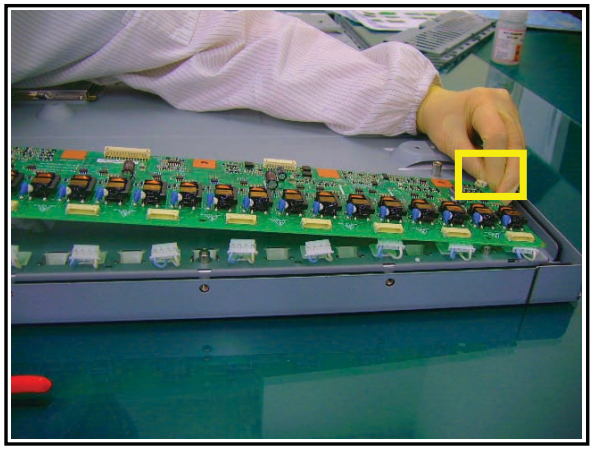

H_16900_034.eps
250707

Figure 4-41 Remove connector CN2

Reassembly

To reassemble, perform all processes in reverse order.

4.6 Model T420HW01V2

4.6.1 Control Board

Disassembly

1. Place the panel face down on the foam bars, and locate the Control board.

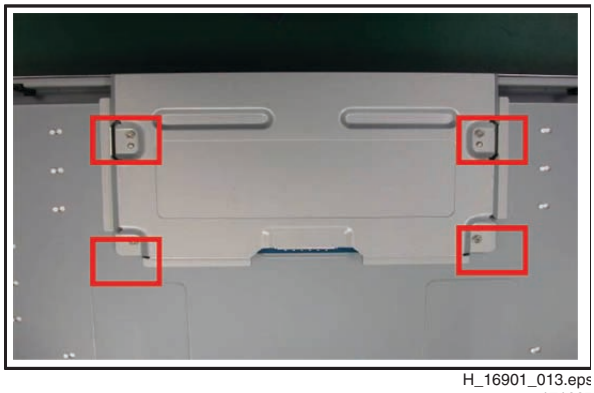

H_16901_013.eps
171007

Figure 4-42 Control board location

2. Remove the four screws of the metal cover: start with the right-down one, then the left-up, one, then the right-up one and finally the left-down one.

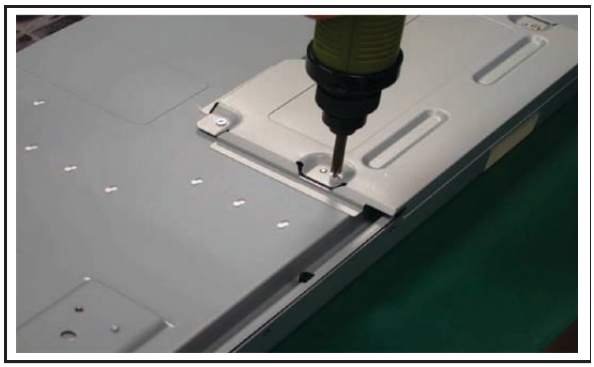

H_16901_014.eps
171007

Figure 4-43 Cover screws removal

3. Lift the cover from the Control board.

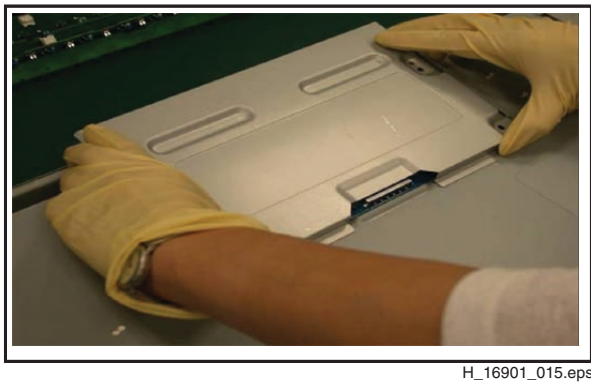

H_16901_015.eps
171007

Figure 4-44 Lift cover

4. Carefully disconnect the flat cable/FPCs from their connectors.

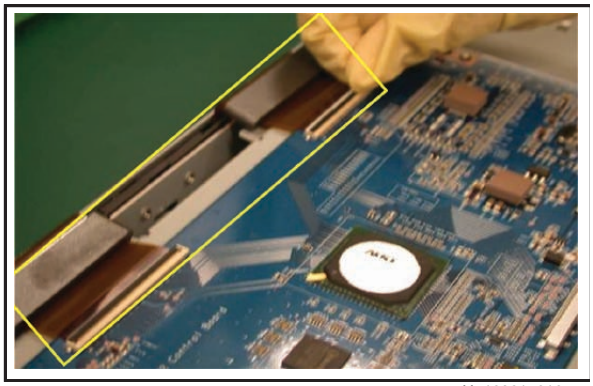

H_16901_016.eps
171007

Figure 4-45 Unplug FPCs

5. You can now remove the Control Board.

Reassembly

To reassemble, perform all processes in reverse order.

Important: Be sure to insert the FPCs correctly: the white line must be invisible when inserted correctly (see figure below).

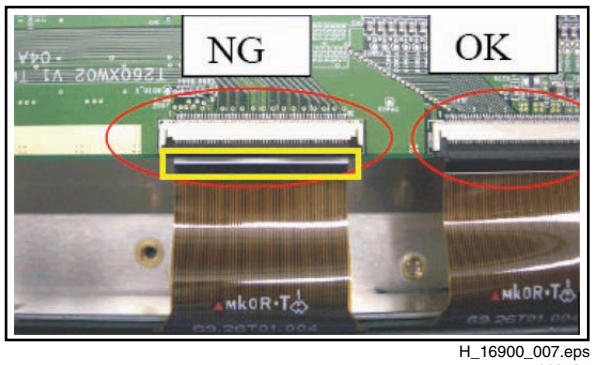

H_16900_007.eps
110707

Figure 4-46 Correct FPC insertion

4.6.2 Inverter Board(s)

Disassembly Master Inverter

1. Place the panel face down on the foam bars, and locate the Inverter board.
2. Remove the cover screws, and remove the cover.

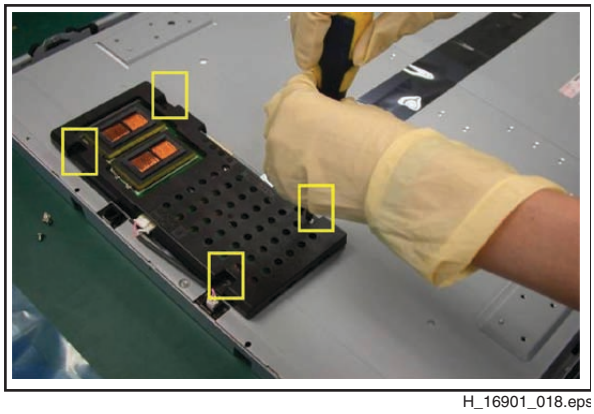

H_16901_018.eps
171007

Figure 4-47 Remove Inverter cover screws

3. Unplug the lamp connector on the inverter. Be careful not to pull and drag the wires. The use of a pair of pliers can be helpful.

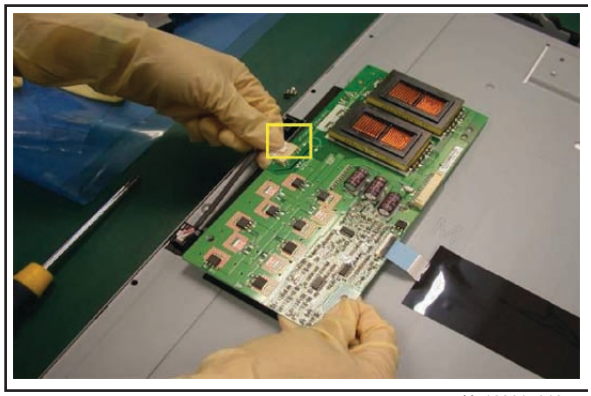

H_16901_019.eps
171007

Figure 4-48 Remove Inverter connectors

4. Unplug connector on the Inverter board (see figure below), and remove the inverter panel.

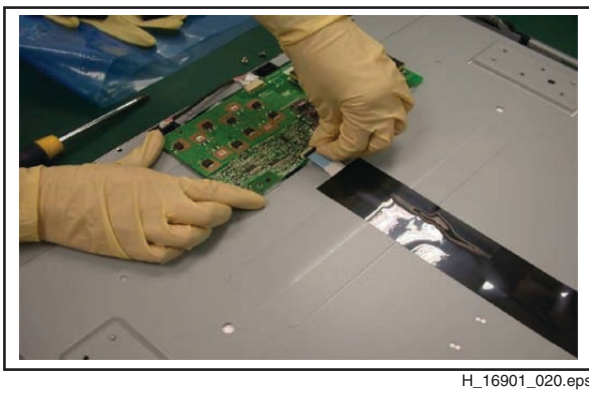

H_16901_020.eps
171007

Figure 4-49 Remove connector

Reassembly Master Inverter

To reassemble, perform all processes in reverse order.

Disassembly Slave Inverter

1. Place the panel face down on the foam bars, and locate the Inverter board.
2. Remove the cover screws, and remove the cover.

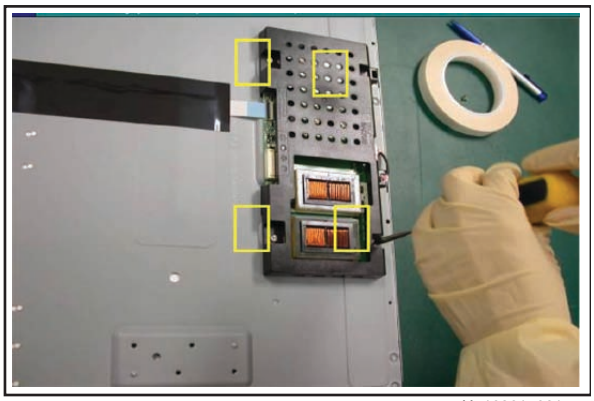

H_16901_021.eps
171007

Figure 4-50 Remove Inverter cover screws

3. Unplug the lamp connector on the inverter. Be careful not to pull and drag the wires. The use of a pair of pliers can be helpful.

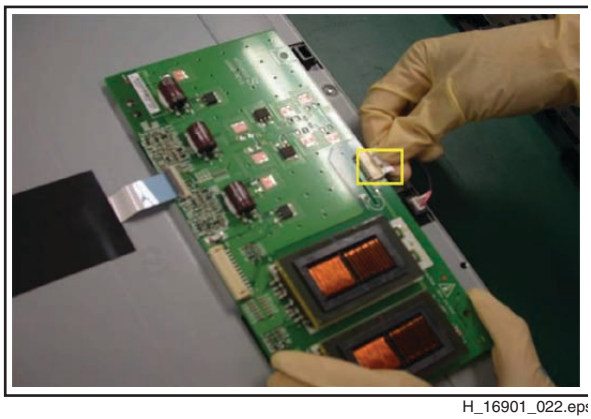

H_16901_022.eps
171007

Figure 4-51 Remove Inverter connectors

4. Unplug connector on the Inverter board (see figure below), and remove the inverter panel.

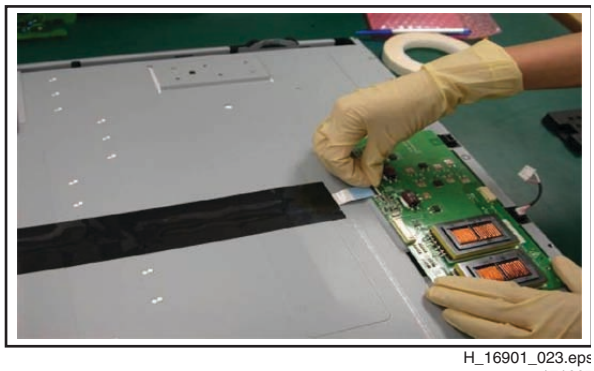

H_16901_023.eps
171007

Figure 4-52 Remove connector

Reassembly Slave Inverter

To reassemble, perform all processes in reverse order.

4.7 Model T420XW01V8

4.7.1 Control Board

Disassembly

1. Place the panel face down on the foam bars, and locate the Control board.

H_16901_001.eps
171007

Figure 4-53 Control board location

2. Remove the four screws of the metal cover: start with the right-down one, then the left-up, one, then the right-up one and finally the left-down one.

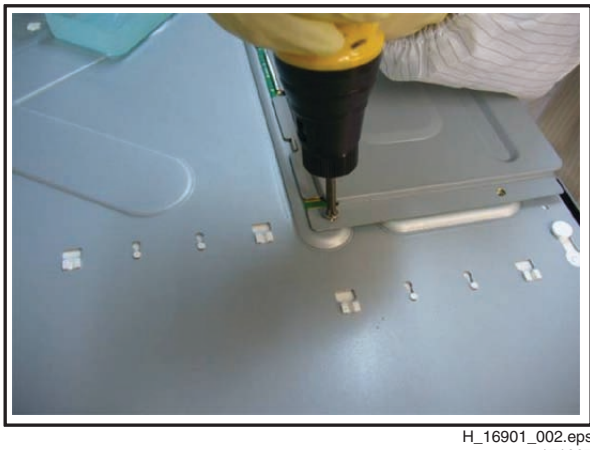

H_16901_002.eps
171007

Figure 4-54 Cover screws removal

3. Lift the cover from the Control board.

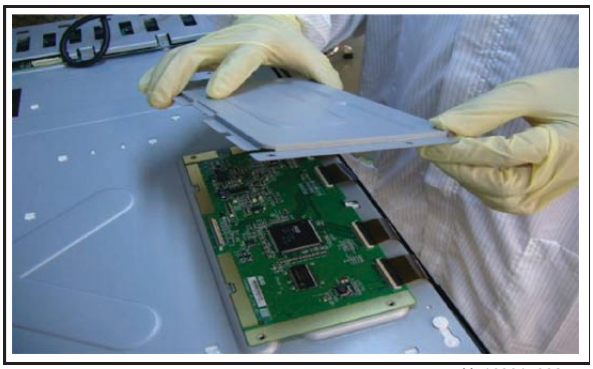

H_16901_003.eps
171007

Figure 4-55 Lift cover

4. Carefully disconnect the flat cable/FPCs from their connectors.

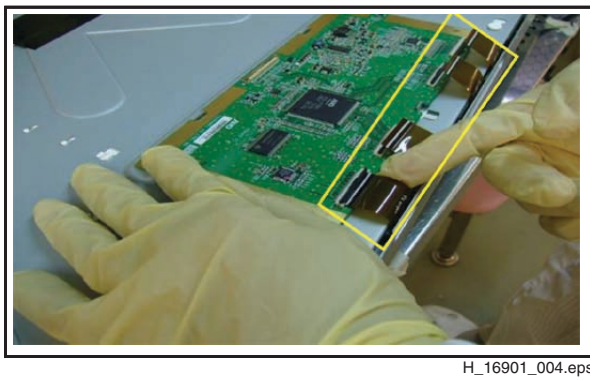

H_16901_004.eps
171007

Figure 4-56 Unplug FPCs

5. You can now remove the Control Board.

Reassembly

To reassemble, perform all processes in reverse order.

Important: Be sure to insert the FPCs correctly: the white line must be invisible when inserted correctly (see figure below).

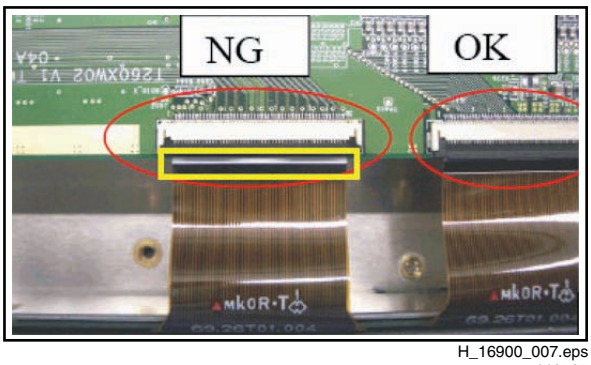

H_16900_007.eps
110707

Figure 4-57 Correct FPC insertion

4.7.2 Inverter Board(s)

Disassembly Master Inverter

1. Place the panel face down on the foam bars, and locate the Inverter board.
2. Remove the cover screws, and remove the cover.

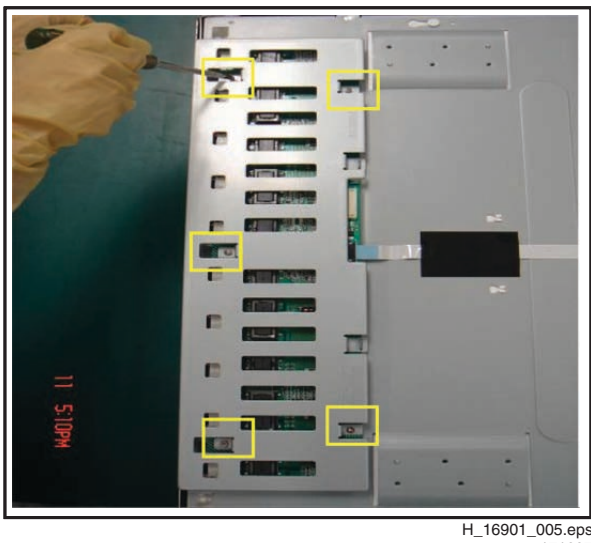

H_16901_005.eps
171007

Figure 4-58 Remove Inverter cover screws

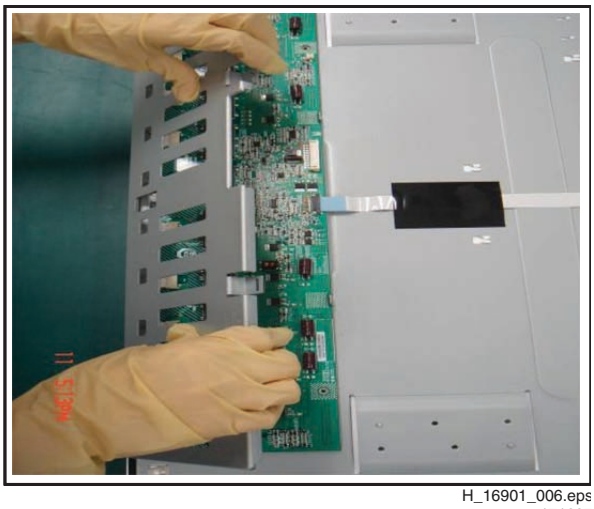

H_16901_006.eps
171007

Figure 4-59 Remove Inverter cover

3. Unplug the lamp connectors on the inverter. Start at the top, and be careful not to pull and drag the wires. The use of a pair of pliers can be helpful.

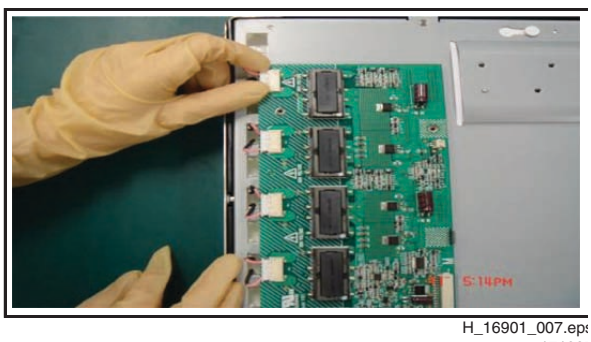

H_16901_007.eps
171007

Figure 4-60 Remove Inverter connectors

4. Unplug connector on the Inverter board (see figure below) and remove the inverter panel.

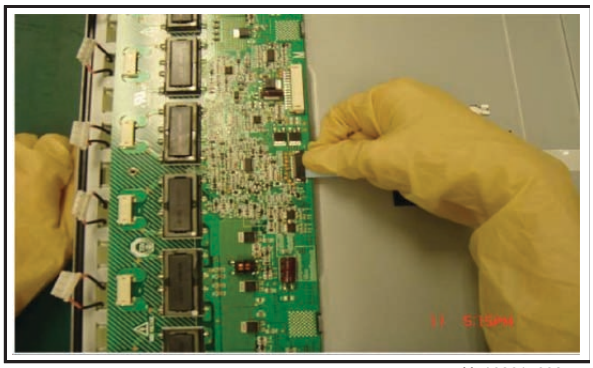

H_16901_008.eps
171007

Figure 4-61 Remove connector

Reassembly Master Inverter
To reassemble, perform all processes in reverse order.

Disassembly Slave Inverter

1. Place the panel face down on the foam bars, and locate the Inverter board.
2. Remove the cover screws, and remove the cover.

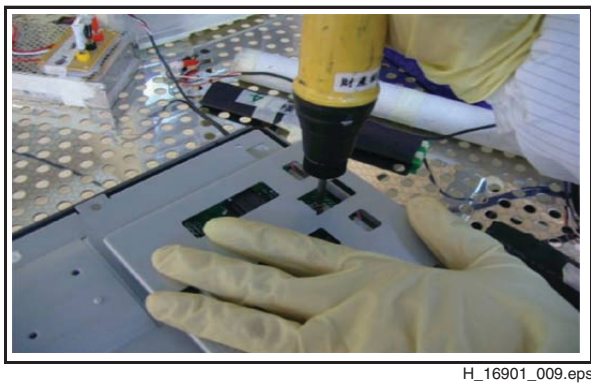

H_16901_009.eps
171007

Figure 4-62 Remove Inverter cover screws

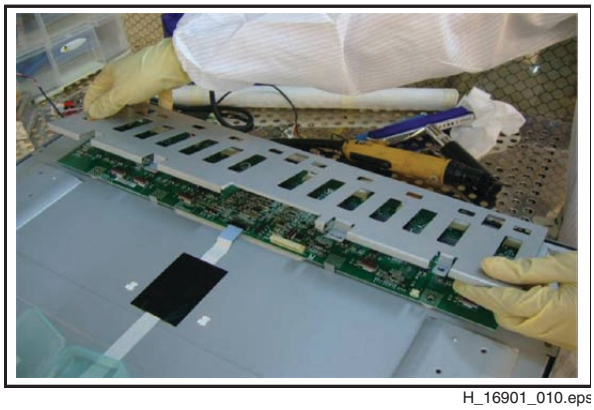

H_16901_010.eps
171007

Figure 4-63 Remove Inverter cover

3. Unplug the lamp connectors on the inverter. Start at the top, and be careful not to pull and drag the wires. The use of a pair of pliers can be helpful.

H_16901_011.eps
171007

Figure 4-64 Remove Inverter connectors

4. Unplug connector on the Inverter board (see figure below), and remove the inverter panel.

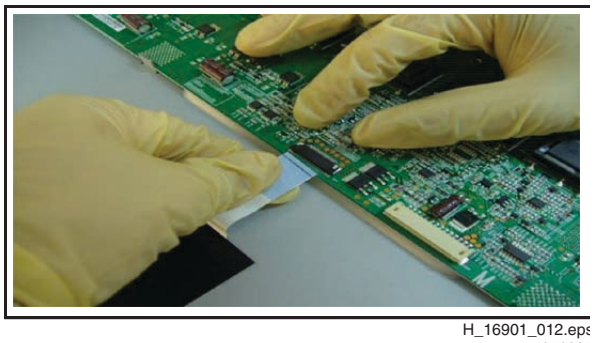

H_16901_012.eps
171007

Figure 4-65 Remove connector

Reassembly Slave Inverter

To reassemble, perform all processes in reverse order.

5. Service Modes, Error Codes, and Fault Finding

Index of this chapter:

5.1 Service Modes
5.2 Error Codes
5.3 Fault Finding

5.1 Service Modes

Not applicable.

5.2 Error Codes

Not applicable.

5.3 Fault Finding

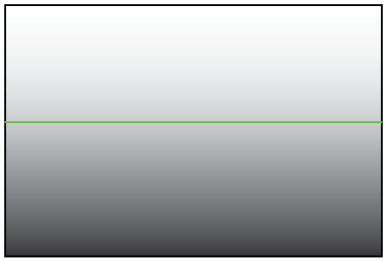	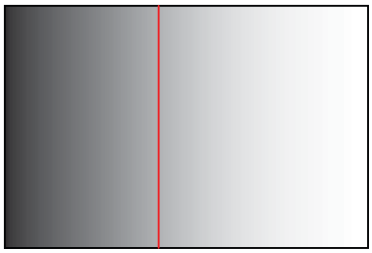
H-LI NE	V- LI NE
	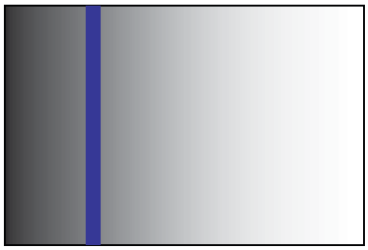
H-BLOCK	V- BL OCK (less than half frame)
Mura	Br ight point
Dark point	Spacer broken

H_16901_024.eps
261007

Figure 5-1 Symptom/Cure overview: exchange the control board in case of these symptoms

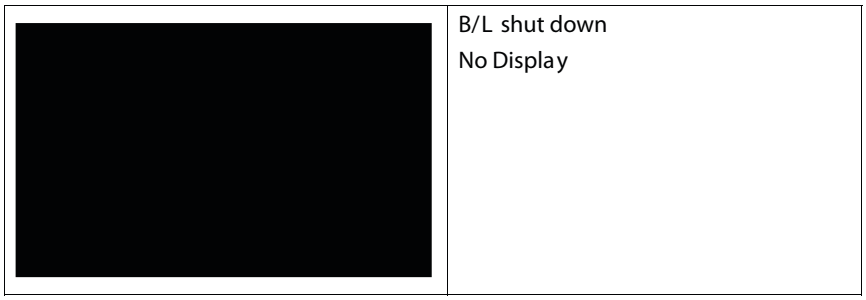

H_16901_025.eps
261007

Figure 5-2 Symptom/Cure overview: replace the inverter in case of this symptom

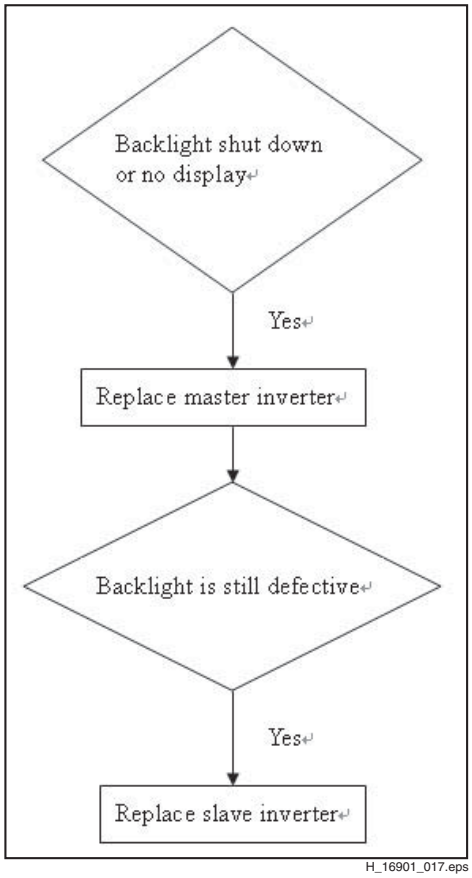

H_16901_017.eps
171007

Figure 5-3 Fault Finding in the inverter parts

6. Block Diagrams, Test Point Overviews, and Waveforms

Not applicable.

7. Circuit Diagrams and PWB Layouts

Not applicable

8. Alignments

Not applicable.

9. Circuit Descriptions, Abbreviation List, and IC Data Sheets

9.1 Circuit Descriptions

Not applicable

9.2 Abbreviation List

AUO	Acer Unipack Optronics (supplier)
CCFL	Cold Cathode Fluorescent Lamp
CMO	Chi Mei Optoelectronics (supplier)
COF	Chip On Flex / Foil / Film
CPT	Chunghwa Picture Tubes (supplier)
DC	Direct Current
FET	Field Effect Transistor
FFC	Flat Foil Cable
FPC	Flexible Printed Circuit
IC	Integrated Circuit
LCD	Liquid Crystal Display
LCM	Liquid Crystal Module
LED	Light Emitting Diode
LPL	LG Philips LCD (supplier)
PCB	Printed Circuit Board (same as PWB)
PSU	Power Supply Unit
PWB	Printed Wiring Board (same as PCB)
RGB	Red, Green, Blue colour space
TCP	Tape Carrier Package

9.3 IC Data Sheets

Not applicable

10. Spare Parts List

Please refer to the Philips Service website, for an actual overview (monthly updated).

11. Revision List

Manual xxxx xxx xxxx.0

- First release.

Manual xxxx xxx xxxx.1

- Info on 42” models added.

Service
Service
Service

CMO (CHI MEI OPT.) LCD 2k7

V315B1-L05
V320B1-L05
V470H1-L03

Service Manual

Contents **Page**

1. Technical Specifications, Connections, and Chassis Overview 2
2. Safety Instructions, Warnings, and Notes 3
3. Directions for Use 4
4. Mechanical Instructions 5
5. Service Modes, Error Codes, and Fault Finding 10
6. Block Diagrams, Test Point Overviews, and Waveforms 11
7. Circuit Diagrams and PWB Layouts 11
8. Alignments 11
9. Circuit Descriptions, Abbreviation List, and IC Data Sheets 11
10. Spare Parts List 11
11. Revision List 11

©Copyright 2007 Philips Consumer Electronics B.V. Eindhoven, The Netherlands.
All rights reserved. No part of this publication may be reproduced, stored in a retrieval system or transmitted, in any form or by any means, electronic, mechanical, photocopying, or otherwise without the prior permission of Philips.

Published by MW 0770 BU CD Customer Service Printed in the Netherlands Subject to modification EN 3122 785 16921

PHILIPS

1. Technical Specifications, Connections, and Chassis Overview

Index of this chapter:

1.1 Introduction
1.2 General
1.3 Specifications

Note:

- Specifications are indicative (subject to change).

1.1 Introduction

In this Service Manual you will find all necessary information to perform the Board Level Repair (= board swap) scenario on LCD panels. The LCD repair manuals are created per brand, and they will contain all necessary information for the different panels used in Philips flat LCD TVs.

1.2 General

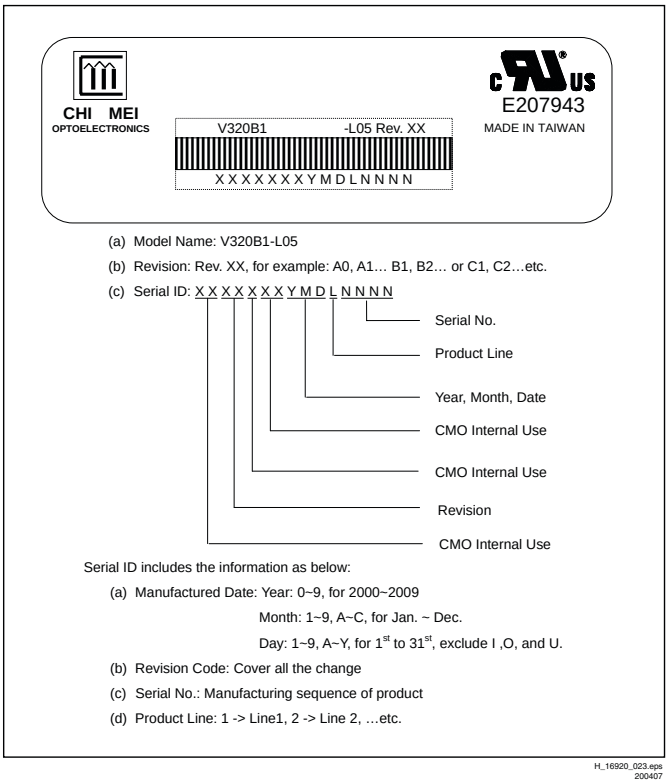

Figure 1-1 CMO module label

1.3 Specifications

Below find attached the data sheets of the different LCD panels. Click on the “model number” to open.

- Model V315B1-L05
- Model V320B1-L05
- Model V470H1-L03

2. Safety Instructions, Warnings, and Notes

Index of this chapter:

2.1 General
2.2 Safety Precautions
2.3 Servicing Precautions

2.1 General

Notes:

- Only authorised persons should perform servicing of this module.
- When using/handling this unit, pay special attention to the LCD Module: it should not be enforced into any other way then next rules, warnings, and/or cautions.
- **"Warning"** indicates a hazard that may lead to death or injury if the warning is ignored and the product is handled incorrectly.
- **"Caution"** indicates a hazard that can lead to injury or damage to property if the caution is ignored and the product is handled incorrectly.

2.2 Safety Precautions

2.2.1 Warning

- Do not supply a voltage higher than specified to this product. This may damage the product or can create hazardous situations.
- Do not use this product in locations where the humidity is extremely high, where it may be splashed with water, or where flammable materials surround it.
- Do not install or use the product in a location that does no satisfy specified environmental conditions. This may damage the product or can create hazardous situations.
- If a foreign substance (such as water, metal, or liquid) gets inside the product, immediately turn “OFF” the power. Continuing to use the product may cause electric shock or can create hazardous situations.
- If the product emits smoke and abnormal smell, or makes an abnormal sound, immediately turn “OFF” the power. Continuing to use the product may cause electric shock or can create hazardous situations.
- Do not (dis)connect the connector while power to the product is “ON”. It takes some time for the voltage to drop to a sufficiently low level after the power has been turned “OFF”. Confirm that the voltage has dropped to a safe level before (dis)connecting the connector.
- Do not pull out or insert the power cable from/to an outlet with wet hands. It may cause electric shock.
- If the power cable is damaged, or if the connector is loose, do not use the product, otherwise, this can lead to hazardous situations or may cause electric shock.
- The LCD Backlight Inverter unit uses a high voltage for the lamps. Keep the cautions concerning electric shock and do not touch the device circuitry handling the inverter unit. And because the capacitors of the device circuitry may remain charged at the moment of Power “OFF”, standing for 1 minute is required in order to discharge the device circuitry.

2.2.2 Caution

- Do not place this product in a location that is subject to heavy vibration, or an unstable surface such as an inclined surface. The product may fall off or fall over, causing injuries.
- Before disconnecting cable from the product, be sure to turn off the power. Be sure to hold the connector when disconnecting cables. Pulling a cable with excessive force may cause the core of the cable to be exposed or break the cable, and this can lead to fire or electric shock.
- This product contains glass. If shock, vibration, heat or distortion is applied to the product, the glass may be broken.
- If glass surface of the display breaks or is scratched, do not touched the broken pieces or the scratched with bare hands. You may be injured.
- LCD Module requires to be handled with special care. LCD Module is not to be touched with metal or hard materials. Must not be stressed by heat or mechanical impact.
- There are some particular components on the rear panel of this product. Skin contact with these components may cause an electric shock. So, handle with care.
- While moving the product, be sure to turn off the power, disconnect all cables and watch your step. Dropping the product may cause injuries from electric shock. So, while moving the product handle with care.
- When cleaning the panel is necessary, wipe it with a soft and moistened cloth a neural detergent. Caution on connector area. Do not use chemicals such as thinner or benzene.
- LCD Module emits heat from the Lamp, Backlight lamp, and component parts. Therefore, the environmental temperature must not exceed 50 deg. C. LCD Module Backlight Inverter system is driven by high voltage, so it must avoid conductive materials.
- If repairing components with a lead line, high voltage or high temperature components must be put out from a lead line and fix.
- Do not place an object on the surface of the display. The glass may break or be scratched.
- This product may be damaged if it is subject to excessive stresses (such as excessive voltage, current, or temperature). The absolute maximum ratings specify the limits of these stresses.
- Do not cover or wrap with any covering materials while power is applied to the product.
- This product is made from various materials such as glass, metal, and plastic. When discarding it, be sure to contact a purchase place.
- If a discrepancy occurs due to any arbitrary modification or disassembly, supplier is not responsible for function, quality or other items.
- Within the warranty period, general faults may be charged for depending on responsibility for the faults. You handle with care

2.3 Servicing Precautions

A colour TFT LCD Module can easily be damaged by both electrical and mechanical stresses. Users therefore, are requested to follow the “Servicing precautions of colour TFT LCD Module” on the following.

2.3.1 System Assembler

- **Follow the power sequence:** An abnormal power sequence may cause critical malfunction or electrical damage.
- **Prevent physical stress.**
- **Prevent overheat:**
  - High temperatures on the surface of the screen may cause poor quality. Please use the LCD Module on the specified temperatures.
  - Low temperatures (under 10 deg. C) makes the LCD Module respond slowly, make the Backlight worse operated, and will shorten very much the lifetime accordingly.
- **Keep LCD Module dust-free**: The LCD Module is sensitive against dust; it can cause visual or functional problems.

- **Do not touch TCP area:** Do not touch TCP area at any case. It can cause Driver IC cracks, film cracks, etc. The TCP is the weakest point of the LCD Module.
- **Do not pull Backlight wire:** Please do not pull the Backlight wire, as it can cause the wire to become disconnected or damaged.
- **Check the connections of the Inverter & Backlight connectors:** Incomplete connection can cause burnt in Backlight connectors or damage the inverter.
- **Handle with care:**
  – Please do not drop, bend, or hit the LCD Module.
  – Physical stress can cause defects as broken panels.
- **Keep mounting screw length and motor driver's torque:** Strong motor driver's torque can make a mechanical defect on LCD Module. Please keep within the specifications.
- **Do not operate for a long time under the same pattern:** Operating the LCD Module for a long time with the same video pattern can cause image persistence and can eventually damage it.
- **Defective panels must also be handled with care:**
  – To prevent making other defects, please handle the defective LCD Module as a good one.
  – Defective LCD Modules must be repaired.
- **Do not stack LCD Modules:** The LCD Module consists of fragile components such as TCPs or Glasses. Stacking the LCD Modules can cause undesired defects.
- **Do not provide strong pressure at connecting:** Strong pressure can transfer the force to the TCP, which is the weakest part of the LCD Module. It eventually can make the TCP crack or lead to other unexpected defects.
- **Let the Backlight Wire at the backside of the LCD Module:** If let the Backlight wire in front of the LCD Module, the Backlight connector can hurt the surface of the polariser.
- **Never (dis)connect at power "ON":** The LCD Module consists of CMOS components, which are known as weak components against EOS. It can damage the product.
- **Electro-static discharge can make damage:**
  – Semi-assembled product should be handled with wrist strap.
  – Earth human body when handle the LCD Module.
  – Please do not touch the interface connector pin.

2.3.2 System Assembler/End User

- **Keep clean the surface:**
  – Please wear rubber gloves when you touch the surface of the LCD Module screen.
  – Please use soft and anti-static material with n-Hexane as cleaner.
- **Be careful not to make polariser scratch:**
  – Surface of polariser is soft, so it's easily scratched.
  – Please do not touch, press or rub on polariser surface with materials over HB hardness.
- **Be careful with swift temperature and humidity changes:** Swift temperature and or humidity change can make dew condensation or ice, which can cause non-conformance such as malfunctioning.
- **Keep out of water:**
  – Water on in the LCD Module can cause electrical short or corrosion.
  – Please wipe out or dry water carefully.
- **Keep the LCD Module free from corrosive gasses:** Corrosive gas can chemically damage the polariser and the circuitry parts and eventually will cause defects.
- **Keep the suitable temperature and humidity:** High temperatures and high humidity will shorten the lifetime

3. Directions for Use

Not applicable.

4. Mechanical Instructions

Index of this chapter:

4.1 General
4.2 Models V315B1-L05 and V320B1-L05
4.2.1 Control Board
4.2.2 Inverter Board
4.3 Model V470H1-L03
4.3.1 Control Board
4.3.2 Inverter Board

4.1 General

4.1.1 Warnings

- Figures can deviate due to the different module executions.
- During repair, place the set face down on a soft surface (e.g. on foam bars as mentioned in next paragraph), in order to prevent damaging the display.
  Note: With some chassis, it is possible to measure and replace the boards while the TV is still on its stand.
- All ICs and many other semiconductors are susceptible to electrostatic discharges (ESD ⚠). Careless handling during repair can reduce life drastically. Make sure that, during repair, you are connected with the same potential as the mass of the set by a wristband with resistance. Keep components and tools also at this same potential.

H_16920_001.eps
060407

Figure 4-1 ESD wristband

- Be careful during measurements in the high voltage section. Never pull plugs out under operation conditions, just to prevent danger caused by electrical sparks.
- Never replace modules or other components while the unit is switched “on”.
- Connectors “to” and “from” the Inverter Boards must be thoroughly connected to avoid any electrical sparks during operation.

4.1.2 Foam Bars

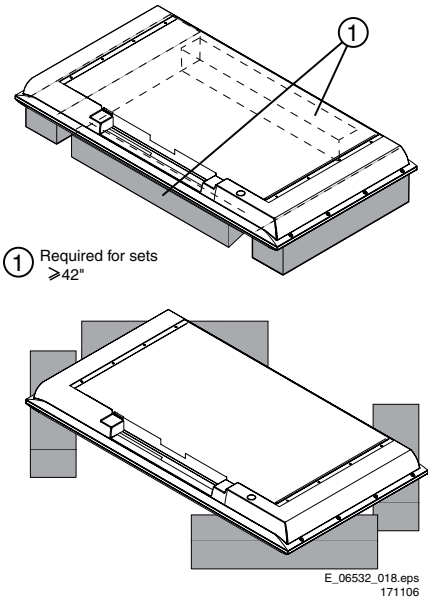

Figure 4-2 Foam bars

The foam bars (order code 3122 785 90580 for two pieces) can be used for all types and sizes of flat displays. See figure “Foam bars” for details. Displays with a size of 42” and larger, require **four** foam bars [1]. Ensure that the foam bars are always supporting the cabinet and **never** only the display.
Caution: Failure to follow these guidelines can seriously damage the display!
By laying the TV face down on the (ESD protective) foam bars, a stable situation is created to perform measurements and alignments. By placing a mirror under the display, you can monitor the screen.

4.1.3 Torque Values

Table 4-1 Recommended Torque Values

Screw Type (cross head)	Recommended Torque Value
M2	2.0 kg*F ± 0.1 kg*F
M2.5	3.0 kg*F ± 0.5 kg*F
M2.6	3.0 kg*F ± 0.5 kg*F
M3	6.0 kg*F ± 0.5 kg*F

4.2 Models V315B1-L05 and V320B1-L05

4.2.1 Control Board

Disassembly

1. Place the panel on the foam bars, and remove the screws of the metal cover (the number of screws depends on the model).

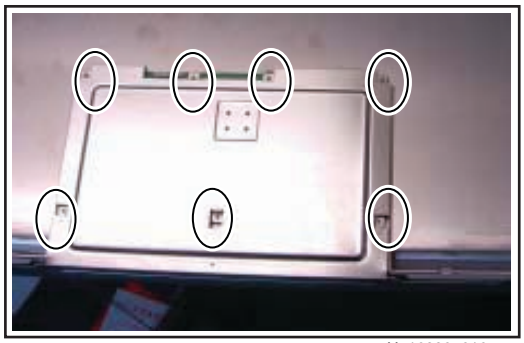

H_16920_016.eps
110407

Figure 4-3 Cover screws

2. Remove the cover in the direction as shown. Be sure not to damage the FFCs.

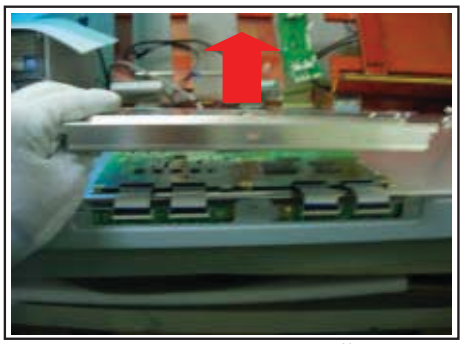

H_16920_017.eps
110407

Figure 4-4 Remove cover

3. Release the four FFCs from their connectors, use tweezers if possible.

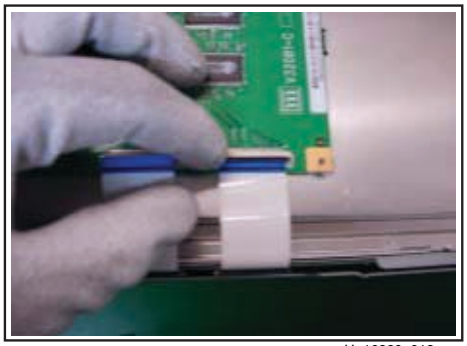

H_16920_018.eps
110407

Figure 4-5 Release FFCs

4. You can now remove the Control Board.

Reassembly

1. Place the panel on the foam bars, and place the Control Board on the panel via the alignment pins.

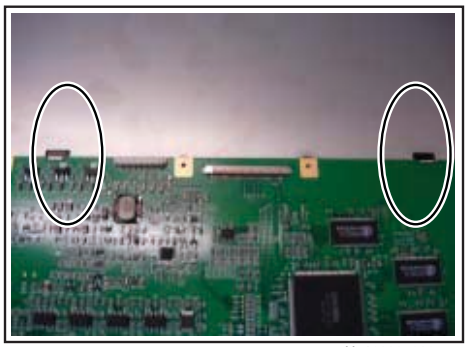

H_16920_020.eps
110407

Figure 4-6 Alignment pins

2. Insert and lock the FFCs into their connectors.

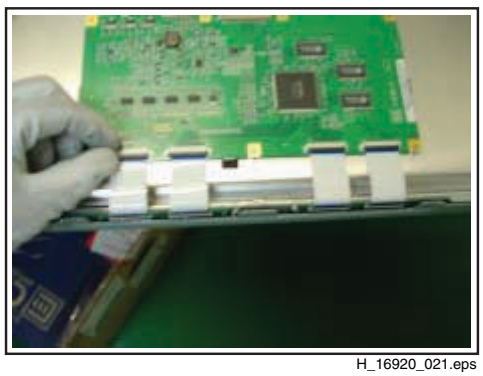

H_16920_021.eps
110407

Figure 4-7 FFC insertion

3. Place the metal cover in the direction shown.

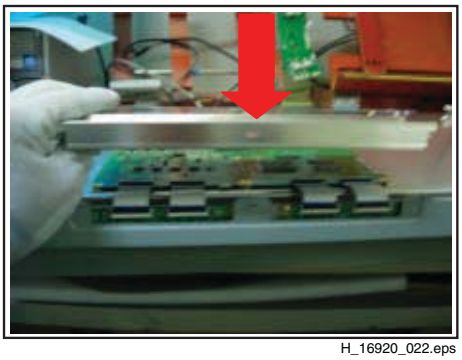

H_16920_022.eps
110407

Figure 4-8 Cover placement

4. Secure the cover screws (refer to earlier figure “Cover screws”).

4.2.2 Inverter Board

Disassembly

1. Place the panel on the foam bars.
2. Remove the connectors attached to the inverter. Start at the top, and be careful not to pull and drag the wires.

H_16920_002.eps
060407

Figure 4-9 Remove connectors

3. Withdraw the grounding wire from the inverter. Be careful not to pull and drag the wire.

H_16920_006.eps
060407

Figure 4-10 Release grounding wire

4. Remove the five fixation screws as indicated.

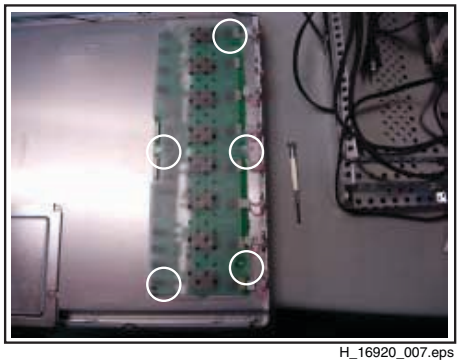

H_16920_007.eps
060407

Figure 4-11 Remove fixation screws

5. Remove the Inverter Board.

Reassembly

1. Place the panel on the foam bars, and place the Inverter Board on the panel via the alignment pins.

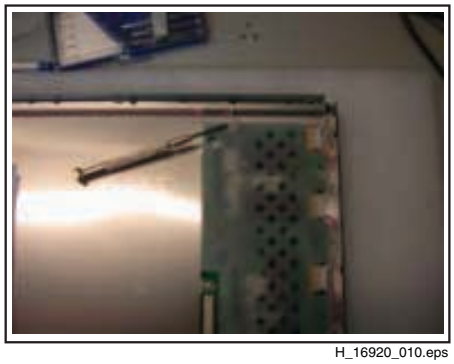

H_16920_010.eps
060407

Figure 4-12 Alignment pins

2. Insert the connectors. Be sure to place the round spot upwards. **Important:** Connectors should be well connected, to avoid electrical sparks!

H_16920_011.eps
060407

Figure 4-13 FFC insertion

3. Place the grounding wire to the Inverter Board. Check if placed correctly.

H_16920_012.eps
060407

Figure 4-14 Grounding wire placement

4. Assembly completed. Check lamp functioning.

4.3 Model V470H1-L03

4.3.1 Control Board

Disassembly

1. Place the panel on the foam bars, and remove the screws of the metal cover (the number of screws depends on the model).

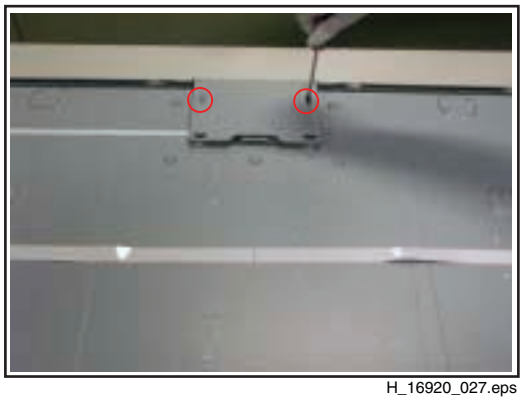

H_16920_027.eps
101007

Figure 4-15 Cover screws

2. Remove the cover in the direction as shown. Be sure not to damage the FFCs.

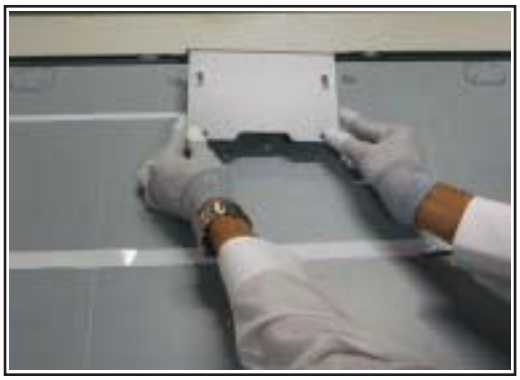

H_16920_028.eps
101007

Figure 4-16 Remove cover

3. Release the four FFCs from their connectors, use tweezers if possible.

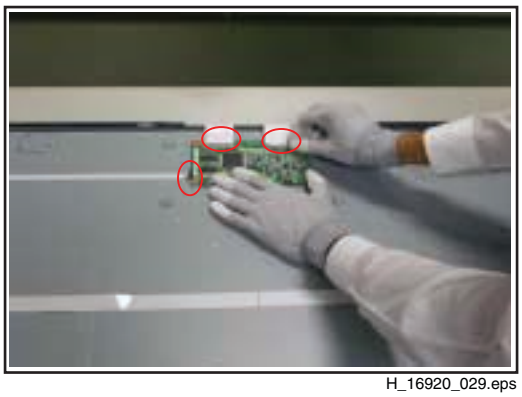

H_16920_029.eps
101007

Figure 4-17 Release FFCs

4. You can now remove the Control Board.

Reassembly

1. Place the panel on the foam bars, and place the Control Board on the panel via the alignment pins.
2. Insert and lock the FFCs into their connectors.

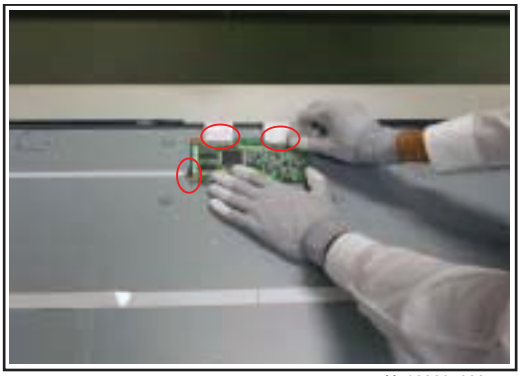

H_16920_029.eps
101007

Figure 4-18 FFC insertion

3. Place the metal cover in the direction shown.

H_16920_028.eps
101007

Figure 4-19 Place cover

4. Secure the cover screws.

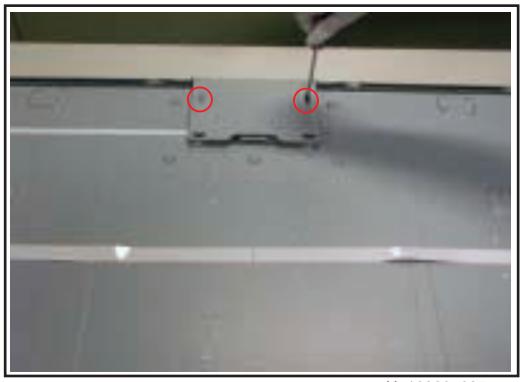

H_16920_027.eps
101007

Figure 4-20 Cover screws

4.3.2 Inverter Board

Disassembly

1. Place the panel on the foam bars, and remove the screws of the inverter cover (the number of screws depends on the model).
2. Remove the inverter cover in the direction as shown.

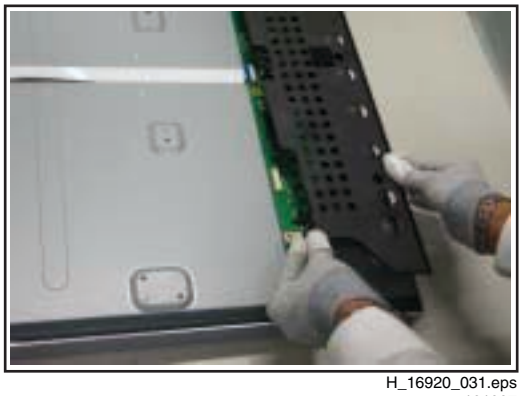

H_16920_031.eps
101007

Figure 4-21 Remove connectors

3. Remove the connectors attached to the inverter. Start at the top, and be careful not to pull and drag the wires. Use tweezers if necessary.

H_16920_032.eps
101007

Figure 4-22 Remove connectors

4. Release the FFC from its connector.

H_16920_033.eps
101007

Figure 4-23 Remove FFC

5. Remove the Inverter Board.

Reassembly

1. Place the panel on the foam bars, and place the Inverter Board on the panel via the alignment pins.
2. Insert and lock the FFC into its connector.

H_16920_033.eps
101007

Figure 4-24 FFC insertion

3. Insert the lamp connectors. Be sure to place the round spot upwards. **Important:** Connectors should be well connected, to avoid electrical sparks!

H_16920_032.eps
101007

Figure 4-25 Insert lamp connectors

4. Place the inverter cover and secure the cover screws.

H_16920_031.eps
101007

Figure 4-26 Place cover

5. Assembly completed. Check lamp functioning.

5. Service Modes, Error Codes, and Fault Finding

Index of this chapter:

5.1 Models: 32-inch and 47-inch

5.1 Models: 32-inch and 47-inch

5.1.1 Fault Finding

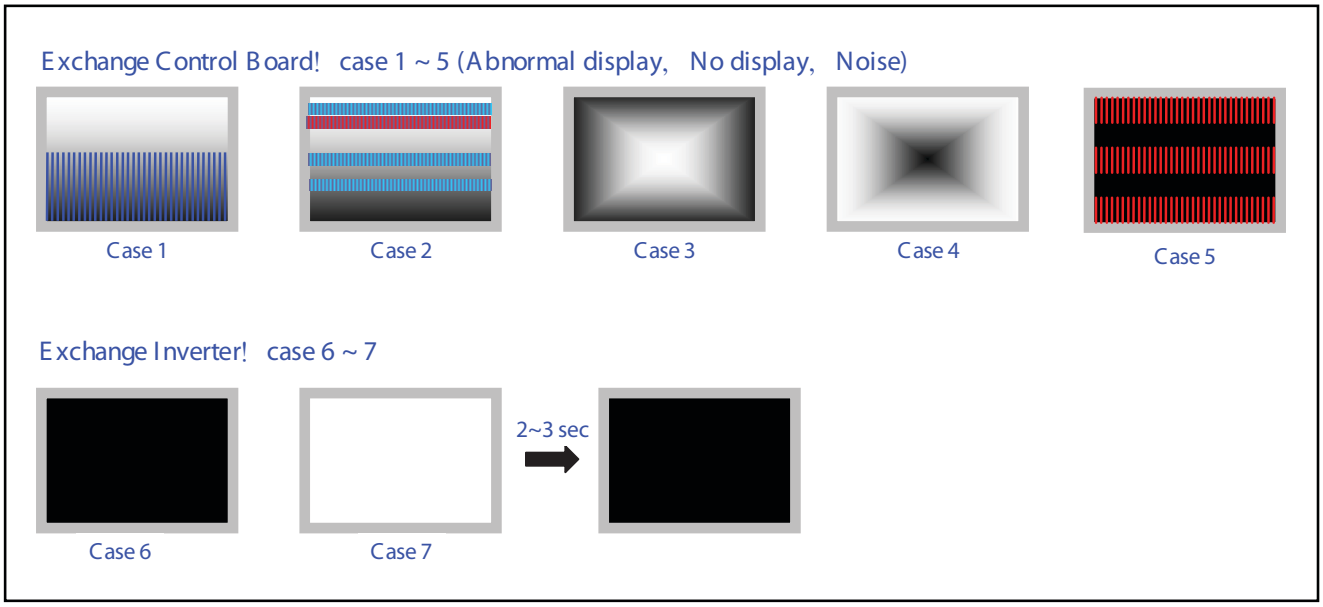

H_16920_024.eps
010507

Figure 5-1 Symptom overview

Table 5-1 Inverter Interface Impedance (CN-1)

Pin No.	Symbol	Impedance
11	ADIM	172 kohm ± 10%
12	BLON	67 kohm ± 10%
13	PDIM	51 kohm ± 10%

6. Block Diagrams, Test Point Overviews, and Waveforms

Not applicable.

7. Circuit Diagrams and PWB Layouts

Not applicable

8. Alignments

Not applicable.

9. Circuit Descriptions, Abbreviation List, and IC Data Sheets

9.1 Circuit Descriptions

Not applicable

9.2 Abbreviation List

AUO	Acer Unipack Optronics (supplier)
CCFL	Cold Cathode Fluorescent Lamp
CMO	Chi Mei Optoelectronics (supplier)
COF	Chip On Flex / Foil / Film
CPT	Chunghwa Picture Tubes (supplier)
DC	Direct Current
FET	Field Effect Transistor
FFC	Flat Foil Cable
FPC	Flexible Printed Circuit
IC	Integrated Circuit
LCD	Liquid Crystal Display
LCM	Liquid Crystal Module
LED	Light Emitting Diode
LPL	LG Philips LCD (supplier)
PCB	Printed Circuit Board (same as PWB)
PSU	Power Supply Unit
PWB	Printed Wiring Board (same as PCB)
RGB	Red, Green, Blue colour space
TCP	Tape Carrier Package

9.3 IC Data Sheets

Not applicable

10. Spare Parts List

Please refer to the Philips Service website, for an actual overview (monthly updated).

11. Revision List

Manual xxxx xxx xxxx.0

- First release.

Manual xxxx xxx xxxx.1

- Model V470H1-L03 added.

CPT (CHUNGHWA) LCD 2k7

CLAA320WB02P

Service
Service
Service

Service Manual

Contents **Page**

1. Technical Specifications, Connections, and Chassis Overview 2
2. Safety Instructions, Warnings, and Notes 3
3. Directions for Use 4
4. Mechanical Instructions 5
5. Service Modes, Error Codes, and Fault Finding 8
6. Block Diagrams, Test Point Overviews, and Waveforms 9
7. Circuit Diagrams and PWB Layouts 9
8. Alignments 9
9. Circuit Descriptions, Abbreviation List, and IC Data Sheets 9
10. Spare Parts List 9
11. Revision List 9

©Copyright 2007 Philips Consumer Electronics B.V. Eindhoven, The Netherlands.
All rights reserved. No part of this publication may be reproduced, stored in a retrieval system or transmitted, in any form or by any means, electronic, mechanical, photocopying, or otherwise without the prior permission of Philips.

Published by MW 0767 BU CD Customer Service Printed in the Netherlands Subject to modification EN 3122 785 16910

PHILIPS

1. Technical Specifications, Connections, and Chassis Overview

Index of this chapter:

1.1 Introduction
1.2 Specifications

Note:

- Specifications are indicative (subject to change).

1.1 Introduction

In this Service Manual you will find all necessary information to perform the Board Level Repair (= board swap) scenario on LCD panels. These LCD repair manuals are created per brand, and they will contain all necessary information for the different panels used in Philips flat LCD TVs.

1.2 Specifications

Below find attached the data sheets of the different LCD panels. Click on the “model number” to open.

- Model CLAA320WB02P

2. Safety Instructions, Warnings, and Notes

Index of this chapter:

2.1 General
2.2 Safety Precautions
2.3 Servicing Precautions

2.1 General

Notes:

- Only authorised persons should perform servicing of this module.
- When using/handling this unit, pay special attention to the LCD Module: it should not be enforced into any other way then next rules, warnings, and/or cautions.
- **"Warning"** indicates a hazard that may lead to death or injury if the warning is ignored and the product is handled incorrectly.
- **"Caution"** indicates a hazard that can lead to injury or damage to property if the caution is ignored and the product is handled incorrectly.

2.2 Safety Precautions

2.2.1 Warning

- Do not supply a voltage higher than specified to this product. This may damage the product or can create hazardous situations.
- Do not use this product in locations where the humidity is extremely high, where it may be splashed with water, or where flammable materials surround it.
- Do not install or use the product in a location that does no satisfy specified environmental conditions. This may damage the product or can create hazardous situations.
- If a foreign substance (such as water, metal, or liquid) gets inside the product, immediately turn “OFF” the power. Continuing to use the product may cause electric shock or can create hazardous situations.
- If the product emits smoke and abnormal smell, or makes an abnormal sound, immediately turn “OFF” the power. Continuing to use the product may cause electric shock or can create hazardous situations.
- Do not (dis)connect the connector while power to the product is “ON”. It takes some time for the voltage to drop to a sufficiently low level after the power has been turned “OFF”. Confirm that the voltage has dropped to a safe level before (dis)connecting the connector.
- Do not pull out or insert the power cable from/to an outlet with wet hands. It may cause electric shock.
- If the power cable is damaged, or if the connector is loose, do not use the product, otherwise, this can lead to hazardous situations or may cause electric shock.
- The LCD Backlight Inverter unit uses a high voltage for the lamps. Keep the cautions concerning electric shock and do not touch the device circuitry handling the inverter unit. And because the capacitors of the device circuitry may remain charged at the moment of Power “OFF”, standing for 1 minute is required in order to discharge the device circuitry.

2.2.2 Caution

- Do not place this product in a location that is subject to heavy vibration, or an unstable surface such as an inclined surface. The product may fall off or fall over, causing injuries.
- Before disconnecting cable from the product, be sure to turn off the power. Be sure to hold the connector when disconnecting cables. Pulling a cable with excessive force may cause the core of the cable to be exposed or break the cable, and this can lead to fire or electric shock.
- This product contains glass. If shock, vibration, heat or distortion is applied to the product, the glass may be broken.
- If glass surface of the display breaks or is scratched, do not touched the broken pieces or the scratched with bare hands. You may be injured.
- LCD Module requires to be handled with special care. LCD Module is not to be touched with metal or hard materials. Must not be stressed by heat or mechanical impact.
- There are some particular components on the rear panel of this product. Skin contact with these components may cause an electric shock. So, handle with care.
- While moving the product, be sure to turn off the power, disconnect all cables and watch your step. Dropping the product may cause injuries from electric shock. So, while moving the product handle with care.
- When cleaning the panel is necessary, wipe it with a soft and moistened cloth a neural detergent. Caution on connector area. Do not use chemicals such as thinner or benzene.
- LCD Module emits heat from the Lamp, Backlight lamp, and component parts. Therefore, the environmental temperature must not exceed 50 deg. C. LCD Module Backlight Inverter system is driven by high voltage, so it must avoid conductive materials.
- If repairing components with a lead line, high voltage or high temperature components must be put out from a lead line and fix.
- Do not place an object on the surface of the display. The glass may break or be scratched.
- This product may be damaged if it is subject to excessive stresses (such as excessive voltage, current, or temperature). The absolute maximum ratings specify the limits of these stresses.
- Do not cover or wrap with any covering materials while power is applied to the product.
- This product is made from various materials such as glass, metal, and plastic. When discarding it, be sure to contact a purchase place.
- If a discrepancy occurs due to any arbitrary modification or disassembly, supplier is not responsible for function, quality or other items.
- Within the warranty period, general faults may be charged for depending on responsibility for the faults. You handle with care

2.3 Servicing Precautions

A colour TFT LCD Module can easily be damaged by both electrical and mechanical stresses. Users therefore, are requested to follow the “Servicing precautions of colour TFT LCD Module” on the following.

2.3.1 System Assembler

- **Follow the power sequence:** An abnormal power sequence may cause critical malfunction or electrical damage.
- **Prevent physical stress.**
- **Prevent overheat:**
  - High temperatures on the surface of the screen may cause poor quality. Please use the LCD Module on the specified temperatures.
  - Low temperatures (under 10 deg. C) makes the LCD Module respond slowly, make the Backlight worse operated, and will shorten very much the lifetime accordingly.
- **Keep LCD Module dust-free**: The LCD Module is sensitive against dust; it can cause visual or functional problems.

- **Do not touch TCP area:** Do not touch TCP area at any case. It can cause Driver IC cracks, film cracks, etc. The TCP is the weakest point of the LCD Module.
- **Do not pull Backlight wire:** Please do not pull the Backlight wire, as it can cause the wire to become disconnected or damaged.
- **Check the connections of the Inverter & Backlight connectors:** Incomplete connection can cause burnt in Backlight connectors or damage the inverter.
- **Handle with care:**
  – Please do not drop, bend, or hit the LCD Module.
  – Physical stress can cause defects as broken panels.
- **Keep mounting screw length and motor driver's torque:** Strong motor driver's torque can make a mechanical defect on LCD Module. Please keep within the specifications.
- **Do not operate for a long time under the same pattern:** Operating the LCD Module for a long time with the same video pattern can cause image persistence and can eventually damage it.
- **Defective panels must also be handled with care:**
  – To prevent making other defects, please handle the defective LCD Module as a good one.
  – Defective LCD Modules must be repaired.
- **Do not stack LCD Modules:** The LCD Module consists of fragile components such as TCPs or Glasses. Stacking the LCD Modules can cause undesired defects.
- **Do not provide strong pressure at connecting:** Strong pressure can transfer the force to the TCP, which is the weakest part of the LCD Module. It eventually can make the TCP crack or lead to other unexpected defects.
- **Let the Backlight Wire at the backside of the LCD Module:** If let the Backlight wire in front of the LCD Module, the Backlight connector can hurt the surface of the polariser.
- **Never (dis)connect at power "ON":** The LCD Module consists of CMOS components, which are known as weak components against EOS. It can damage the product.
- **Electro-static discharge can make damage:**
  – Semi-assembled product should be handled with wrist strap.
  – Earth human body when handle the LCD Module.
  – Please do not touch the interface connector pin.

2.3.2 System Assembler/End User

- **Keep clean the surface:**
  – Please wear rubber gloves when you touch the surface of the LCD Module screen.
  – Please use soft and anti-static material with n-Hexane as cleaner.
- **Be careful not to make polariser scratch:**
  – Surface of polariser is soft, so it's easily scratched.
  – Please do not touch, press or rub on polariser surface with materials over HB hardness.
- **Be careful with swift temperature and humidity changes:** Swift temperature and or humidity change can make dew condensation or ice, which can cause non-conformance such as malfunctioning.
- **Keep out of water:**
  – Water on in the LCD Module can cause electrical short or corrosion.
  – Please wipe out or dry water carefully.
- **Keep the LCD Module free from corrosive gasses:** Corrosive gas can chemically damage the polariser and the circuitry parts and eventually will cause defects.
- **Keep the suitable temperature and humidity:** High temperatures and high humidity will shorten the lifetime

3. Directions for Use

Not applicable.

4. Mechanical Instructions

Index of this chapter:

4.1 General
4.2 Model CLAA320WB02P

4.1 General

4.1.1 Warnings

- Figures can deviate due to the different module executions.
- During repair, place the set face down on a soft surface (e.g. on foam bars as mentioned in next paragraph), in order to prevent damaging the display.
  Note: With some chassis, it is possible to measure and replace the boards while the TV is still on its stand.
- All ICs and many other semiconductors are susceptible to electrostatic discharges (ESD ⚠). Careless handling during repair can reduce life drastically. Make sure that, during repair, you are connected with the same potential as the mass of the set by a wristband with resistance. Keep components and tools also at this same potential.

H_16920_001.eps
060407

Figure 4-1 ESD wristband

- Be careful during measurements in the high voltage section. Never pull plugs out under operation conditions, just to prevent danger caused by electrical sparks.
- Never replace modules or other components while the unit is switched “on”.
- Connectors “to” and “from” the Inverter Boards must be thoroughly connected to avoid any electrical sparks during operation.

4.1.2 Foam Bars

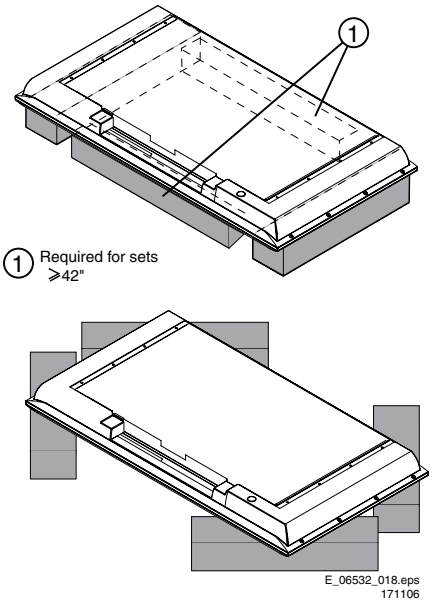

Figure 4-2 Foam bars

The foam bars (order code 3122 785 90580 for two pieces) can be used for all types and sizes of flat displays. See figure “Foam bars” for details. Displays with a size of 42” and larger, require **four** foam bars [1]. Ensure that the foam bars are always supporting the cabinet and **never** only the display.
Caution: Failure to follow these guidelines can seriously damage the display!
By laying the TV face down on the (ESD protective) foam bars, a stable situation is created to perform measurements and alignments. By placing a mirror under the display, you can monitor the screen.

4.1.3 Torque Values

Table 4-1 Recommended Torque Values

Screw Type (cross head)	Recommended Torque Value
M2	2.0 kg*F ± 0.1 kg*F
M2.5	3.0 kg*F ± 0.5 kg*F
M2.6	3.0 kg*F ± 0.5 kg*F
M3	6.0 kg*F ± 0.5 kg*F

4.2 Model CLAA320WB02P

4.2.1 Control Board

Disassembly

1. Place the panel face down on the foam bars, and locate the Control board.

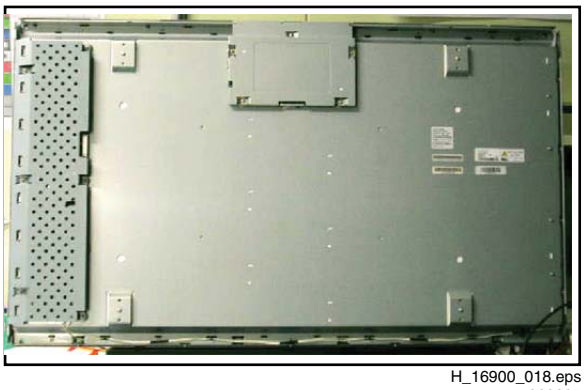

H_16900_018.eps
260607

Figure 4-3 Control board location

2. Remove the four screws of the metal cover: start with the right-down one, then the left-up, one, then the right-up one and finally the left-down one and lift the cover from the Control board.

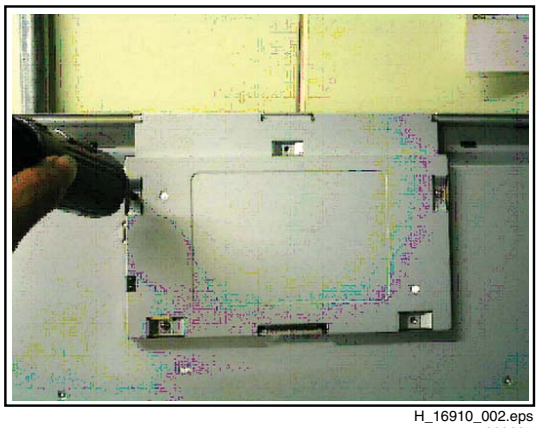

H_16910_002.eps
260607

Figure 4-4 Cover screws removal

3. Carefully disconnect the flat cable/FPCs from their connectors.

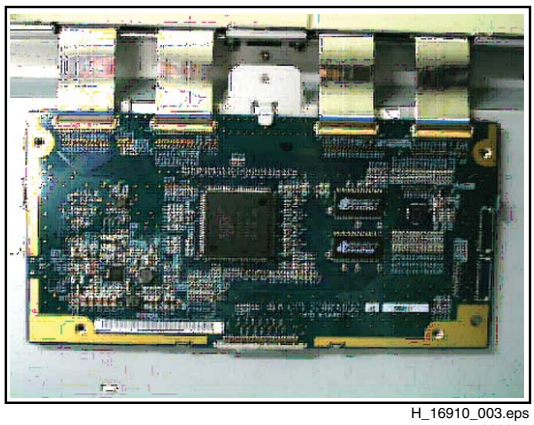

H_16910_003.eps
260607

Figure 4-5 Unplug FPCs

4. You can now remove the Control Board.

Reassembly

To reassemble, perform all processes in reverse order.

Important: Be sure to insert the FPCs correctly: the white line must be invisible when inserted correctly (see figure below).

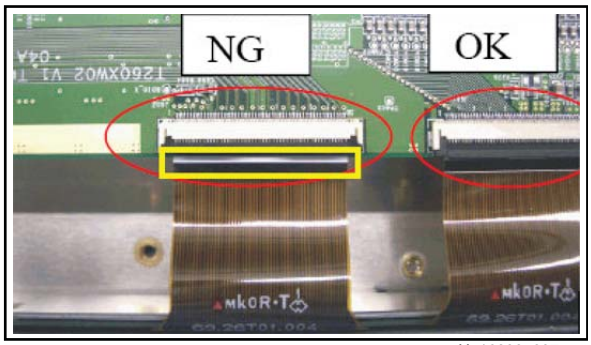

H_16900_007.eps
110707

Figure 4-6 Correct FPC insertion

4.2.2 Inverter Board

Disassembly

1. Place the panel face down on the foam bars, and locate the Inverter board.
2. Remove the cover screws.

H_16910_004.eps
270607

Figure 4-7 Remove Inverter cover

H_16910_005.eps
270607

Figure 4-8 Remove Inverter cover screws

3. Unplug the lamp connectors on the inverter. Start at the top, and be careful not to pull and drag the wires. The use of a pair of pliers can be helpful.

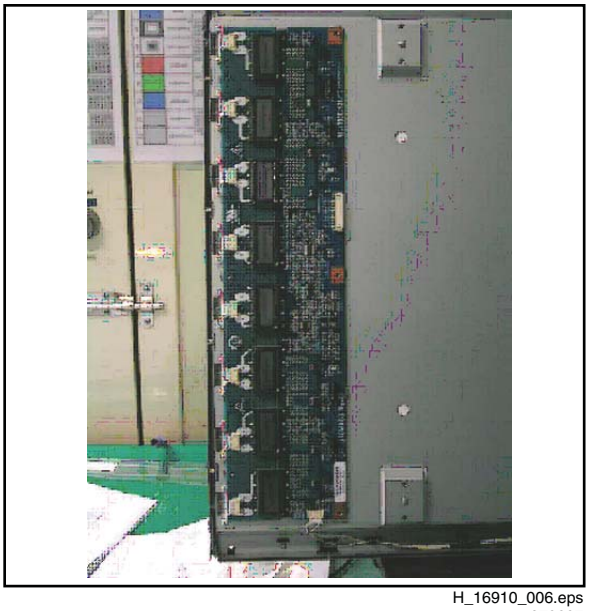

H_16910_006.eps
270607

Figure 4-9 Remove Inverter connectors

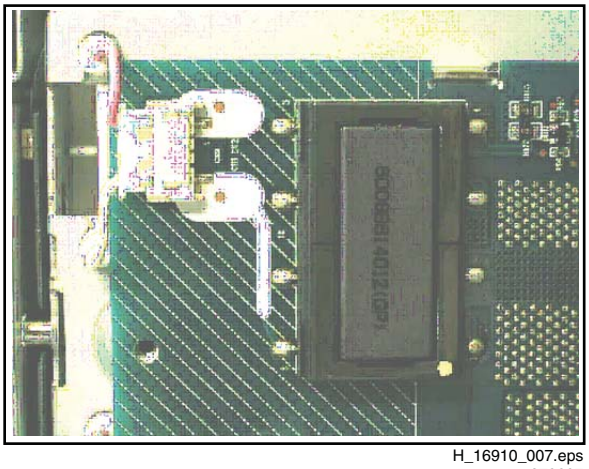

H_16910_007.eps
270607

Figure 4-10 Remove Inverter board

4. You can now remove the Inverter board.

Reassembly
To reassemble, perform all processes in reverse order.

5. Service Modes, Error Codes, and Fault Finding

Index of this chapter:

5.1 Service Modes
5.2 Error Codes
5.3 Fault Finding

5.1 Service Modes

Not applicable.

5.2 Error Codes

Not applicable.

5.3 Fault Finding

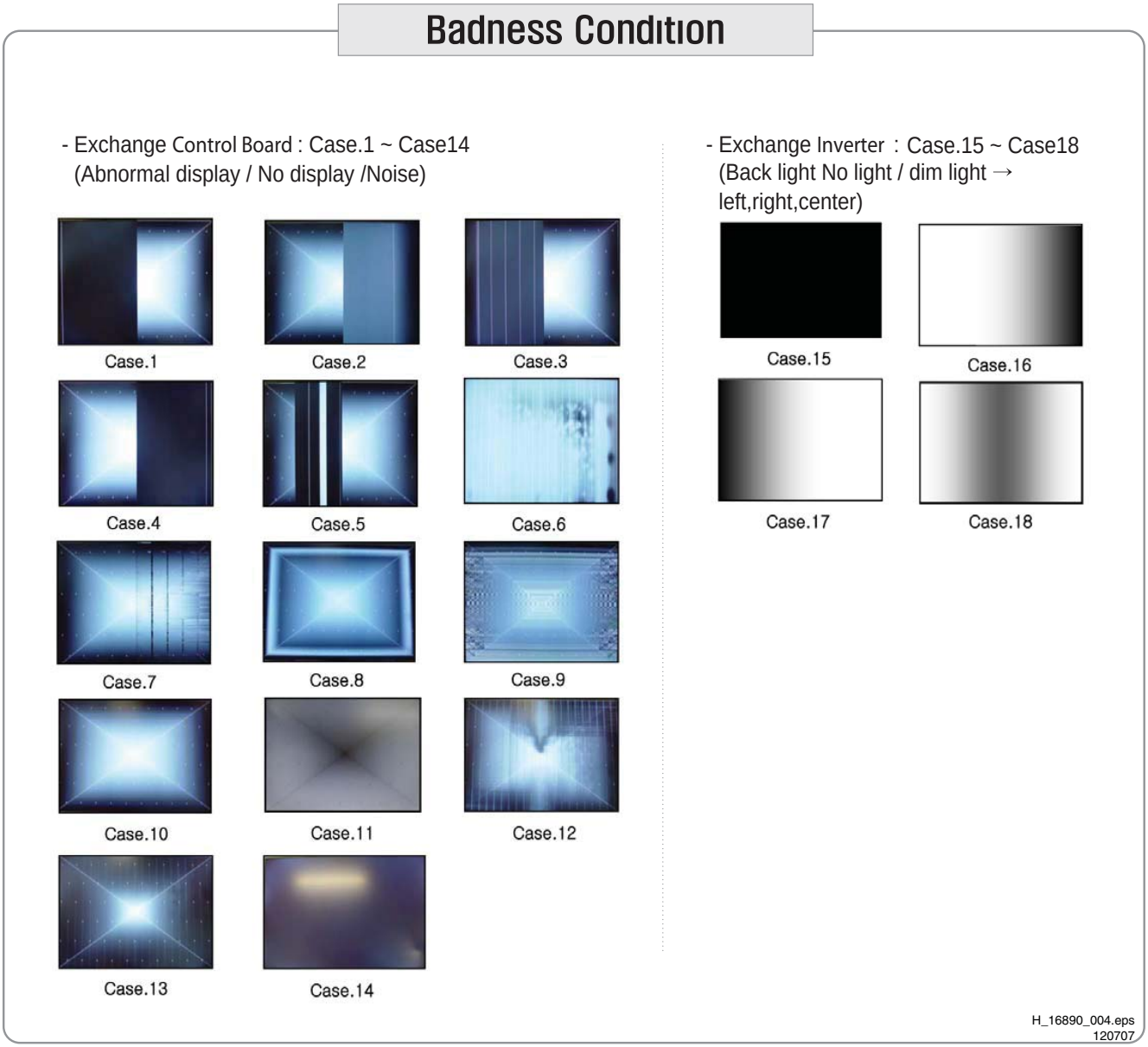

Figure 5-1 Symptom/Cure overview

6. Block Diagrams, Test Point Overviews, and Waveforms

Not applicable.

7. Circuit Diagrams and PWB Layouts

Not applicable

8. Alignments

Not applicable.

9. Circuit Descriptions, Abbreviation List, and IC Data Sheets

9.1 Circuit Descriptions

Not applicable

9.2 Abbreviation List

AUO	Acer Unipack Optronics (supplier)
CCFL	Cold Cathode Fluorescent Lamp
CMO	Chi Mei Optoelectronics (supplier)
CPT	Chunghwa Picture Tubes (supplier)
COF	Chip On Flex / Foil / Film
CPT	Chunghwa Picture Tubes (supplier)
DC	Direct Current
FET	Field Effect Transistor
FFC	Flat Foil Cable
FPC	Flexible Printed Circuit
IC	Integrated Circuit
LCD	Liquid Crystal Display
LCM	Liquid Crystal Module
LED	Light Emitting Diode
LPL	LG Philips LCD (supplier)
PCB	Printed Circuit Board (same as PWB)
PSU	Power Supply Unit
PWB	Printed Wiring Board (same as PCB)
RGB	Red, Green, Blue colour space
TCP	Tape Carrier Package

9.3 IC Data Sheets

Not applicable

10. Spare Parts List

Please refer to the Philips Service website, for an actual overview (monthly updated).

11. Revision List

Manual xxxx xxx xxxx.0

- First release.

Service
Service
Service

LPL (LG Philips) LCD 2k7

LC260WX2
LC320W01
LC320WX2
LC420WU2
LC420WX2, LC420WX3, LC420WX5
LC470WU1, LC470WU4

Service Manual

Contents **Page**

1. Technical Specifications, Connections, and Chassis Overview 2
2. Safety Instructions, Warnings, and Notes 3
3. Directions for Use 4
4. Mechanical Instructions 5
5. Service Modes, Error Codes, and Fault Finding 31
6. Block Diagrams, Test Point Overviews, and Waveforms 32
7. Circuit Diagrams and PWB Layouts 32
8. Alignments 32
9. Circuit Descriptions, Abbreviation List, and IC Data Sheets 32
10. Spare Parts List 32
11. Revision List 32

©Copyright 2007 Philips Consumer Electronics B.V. Eindhoven, The Netherlands.
All rights reserved. No part of this publication may be reproduced, stored in a retrieval system or transmitted, in any form or by any means, electronic, mechanical, photocopying, or otherwise without the prior permission of Philips.

Published by MW 0767 BG CD Customer Service Printed in the Netherlands Subject to modification EN 3122 785 16890

PHILIPS

1. Technical Specifications, Connections, and Chassis Overview

Index of this chapter:

1.1 Introduction
1.2 General
1.3 Specifications

Note:

- Specifications are indicative (subject to change).

1.1 Introduction

In this Service Manual you will find all necessary information to perform the Board Level Repair (= board swap) scenario on LCD panels. These LCD repair manuals are created per brand, and they will contain all necessary information for the different panels used in Philips flat LCD TVs.

1.2 General

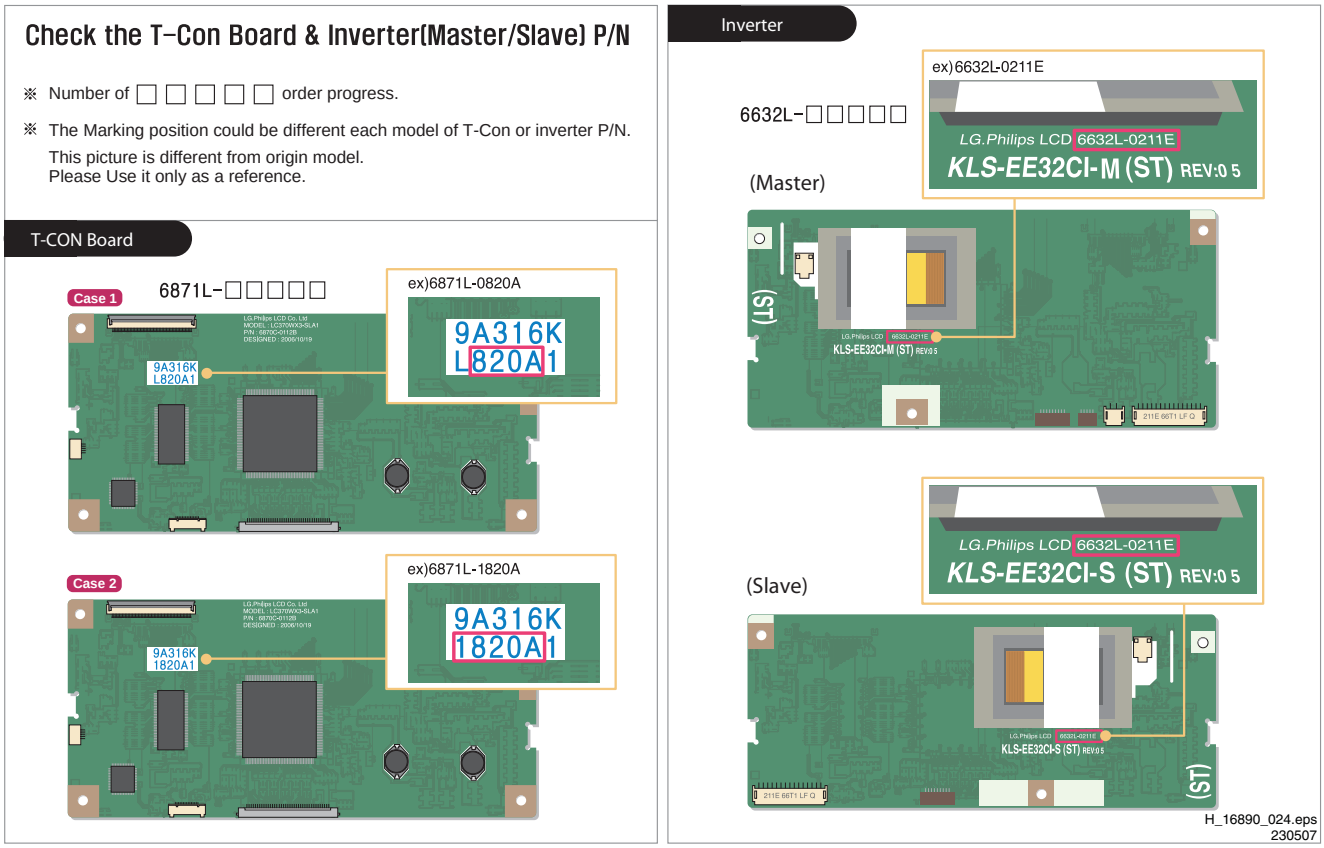

Figure 1-1 LPL board labelling

1.3 Specifications

Below find attached the data sheets of the different LCD panels. Click on the “model number” to open.

- Model LC260WX2
- Model LC320W01
- Model LC320WX2
- Model LC420WU2
- Model LC420WX2
- Model LC420WX3
- Model LC420WX5
- Model LC470WU1
- Model LC470WU4

2. Safety Instructions, Warnings, and Notes

Index of this chapter:

2.1 General
2.2 Safety Precautions
2.3 Servicing Precautions

2.1 General

Notes:

- Only authorised persons should perform servicing of this module.
- When using/handling this unit, pay special attention to the LCD Module: it should not be enforced into any other way then next rules, warnings, and/or cautions.
- **"Warning"** indicates a hazard that may lead to death or injury if the warning is ignored and the product is handled incorrectly.
- **"Caution"** indicates a hazard that can lead to injury or damage to property if the caution is ignored and the product is handled incorrectly.

2.2 Safety Precautions

2.2.1 Warning

- Do not supply a voltage higher than specified to this product. This may damage the product or can create hazardous situations.
- Do not use this product in locations where the humidity is extremely high, where it may be splashed with water, or where flammable materials surround it.
- Do not install or use the product in a location that does no satisfy specified environmental conditions. This may damage the product or can create hazardous situations.
- If a foreign substance (such as water, metal, or liquid) gets inside the product, immediately turn “OFF” the power. Continuing to use the product may cause electric shock or can create hazardous situations.
- If the product emits smoke and abnormal smell, or makes an abnormal sound, immediately turn “OFF” the power. Continuing to use the product may cause electric shock or can create hazardous situations.
- Do not (dis)connect the connector while power to the product is “ON”. It takes some time for the voltage to drop to a sufficiently low level after the power has been turned “OFF”. Confirm that the voltage has dropped to a safe level before (dis)connecting the connector.
- Do not pull out or insert the power cable from/to an outlet with wet hands. It may cause electric shock.
- If the power cable is damaged, or if the connector is loose, do not use the product, otherwise, this can lead to hazardous situations or may cause electric shock.
- The LCD Backlight Inverter unit uses a high voltage for the lamps. Keep the cautions concerning electric shock and do not touch the device circuitry handling the inverter unit. And because the capacitors of the device circuitry may remain charged at the moment of Power “OFF”, standing for 1 minute is required in order to discharge the device circuitry.

2.2.2 Caution

- Do not place this product in a location that is subject to heavy vibration, or an unstable surface such as an inclined surface. The product may fall off or fall over, causing injuries.
- Before disconnecting cable from the product, be sure to turn off the power. Be sure to hold the connector when disconnecting cables. Pulling a cable with excessive force may cause the core of the cable to be exposed or break the cable, and this can lead to fire or electric shock.
- This product contains glass. If shock, vibration, heat or distortion is applied to the product, the glass may be broken.
- If glass surface of the display breaks or is scratched, do not touched the broken pieces or the scratched with bare hands. You may be injured.
- LCD Module requires to be handled with special care. LCD Module is not to be touched with metal or hard materials. Must not be stressed by heat or mechanical impact.
- There are some particular components on the rear panel of this product. Skin contact with these components may cause an electric shock. So, handle with care.
- While moving the product, be sure to turn off the power, disconnect all cables and watch your step. Dropping the product may cause injuries from electric shock. So, while moving the product handle with care.
- When cleaning the panel is necessary, wipe it with a soft and moistened cloth a neural detergent. Caution on connector area. Do not use chemicals such as thinner or benzene.
- LCD Module emits heat from the Lamp, Backlight lamp, and component parts. Therefore, the environmental temperature must not exceed 50 deg. C. LCD Module Backlight Inverter system is driven by high voltage, so it must avoid conductive materials.
- If repairing components with a lead line, high voltage or high temperature components must be put out from a lead line and fix.
- Do not place an object on the surface of the display. The glass may break or be scratched.
- This product may be damaged if it is subject to excessive stresses (such as excessive voltage, current, or temperature). The absolute maximum ratings specify the limits of these stresses.
- Do not cover or wrap with any covering materials while power is applied to the product.
- This product is made from various materials such as glass, metal, and plastic. When discarding it, be sure to contact a purchase place.
- If a discrepancy occurs due to any arbitrary modification or disassembly, supplier is not responsible for function, quality or other items.
- Within the warranty period, general faults may be charged for depending on responsibility for the faults. You handle with care

2.3 Servicing Precautions

A colour TFT LCD Module can easily be damaged by both electrical and mechanical stresses. Users therefore, are requested to follow the “Servicing precautions of colour TFT LCD Module” on the following.

2.3.1 System Assembler

- **Follow the power sequence:** An abnormal power sequence may cause critical malfunction or electrical damage.
- **Prevent physical stress.**
- **Prevent overheat:**
  - High temperatures on the surface of the screen may cause poor quality. Please use the LCD Module on the specified temperatures.
  - Low temperatures (under 10 deg. C) makes the LCD Module respond slowly, make the Backlight worse operated, and will shorten very much the lifetime accordingly.
- **Keep LCD Module dust-free**: The LCD Module is sensitive against dust; it can cause visual or functional problems.

- **Do not touch TCP area:** Do not touch TCP area at any case. It can cause Driver IC cracks, film cracks, etc. The TCP is the weakest point of the LCD Module.
- **Do not pull Backlight wire:** Please do not pull the Backlight wire, as it can cause the wire to become disconnected or damaged.
- **Check the connections of the Inverter & Backlight connectors:** Incomplete connection can cause burnt in Backlight connectors or damage the inverter.
- **Handle with care:**
  – Please do not drop, bend, or hit the LCD Module.
  – Physical stress can cause defects as broken panels.
- **Keep mounting screw length and motor driver's torque:** Strong motor driver's torque can make a mechanical defect on LCD Module. Please keep within the specifications.
- **Do not operate for a long time under the same pattern:** Operating the LCD Module for a long time with the same video pattern can cause image persistence and can eventually damage it.
- **Defective panels must also be handled with care:**
  – To prevent making other defects, please handle the defective LCD Module as a good one.
  – Defective LCD Modules must be repaired.
- **Do not stack LCD Modules:** The LCD Module consists of fragile components such as TCPs or Glasses. Stacking the LCD Modules can cause undesired defects.
- **Do not provide strong pressure at connecting:** Strong pressure can transfer the force to the TCP, which is the weakest part of the LCD Module. It eventually can make the TCP crack or lead to other unexpected defects.
- **Let the Backlight Wire at the backside of the LCD Module:** If let the Backlight wire in front of the LCD Module, the Backlight connector can hurt the surface of the polariser.
- **Never (dis)connect at power "ON":** The LCD Module consists of CMOS components, which are known as weak components against EOS. It can damage the product.
- **Electrostatic discharge can make damage:**
  – Semi-assembled product should be handled with wrist strap.
  – Earth human body when handle the LCD Module.
  – Please do not touch the interface connector pin.

2.3.2 System Assembler/End User

- **Keep clean the surface:**
  – Please wear rubber gloves when you touch the surface of the LCD Module screen.
  – Please use soft and anti-static material with n-Hexane as cleaner.
- **Be careful not to make polariser scratch:**
  – Surface of polariser is soft, so it's easily scratched.
  – Please do not touch, press or rub on polariser surface with materials over HB hardness.
- **Be careful with swift temperature and humidity changes:** Swift temperature and or humidity change can make dew condensation or ice, which can cause non-conformance such as malfunctioning.
- **Keep out of water:**
  – Water on in the LCD Module can cause electrical short or corrosion.
  – Please wipe out or dry water carefully.
- **Keep the LCD Module free from corrosive gasses:** Corrosive gas can chemically damage the polariser and the circuitry parts and eventually will cause defects.
- **Keep the suitable temperature and humidity:** High temperatures and high humidity will shorten the lifetime

3. Directions for Use

Not applicable.

4. Mechanical Instructions

Index of this chapter:

4.1 General
4.2 Model LC260WX2
4.3 Model LC320W01
4.4 Model LC320WX2
4.5 Model LC420WU2
4.6 Model LC420WX2
4.7 Model LC420WX3
4.8 Model LC420WX5
4.9 Model LC470WU1
4.10 Model LC470WU4

4.1 General

4.1.1 Warnings

- Figures can deviate due to the different module executions.
- During repair, place the set face down on a soft surface (e.g. on foam bars as mentioned in next paragraph), in order to prevent damaging the display.
  Note: With some chassis, it is possible to measure and replace the boards while the TV is still on its stand.
- All ICs and many other semiconductors are susceptible to electrostatic discharges (ESD ⚠). Careless handling during repair can reduce life drastically. Make sure that, during repair, you are connected with the same potential as the mass of the set by a wristband with resistance. Keep components and tools also at this same potential.

H_16920_001.eps
060407

Figure 4-1 ESD wristband

- Be careful during measurements in the high voltage section. Never pull plugs out under operation conditions, just to prevent danger caused by electrical sparks.
- Never replace modules or other components while the unit is switched “on”.
- Connectors “to” and “from” the Inverter Boards must be thoroughly connected to avoid any electrical sparks during operation.

4.1.2 Foam Bars

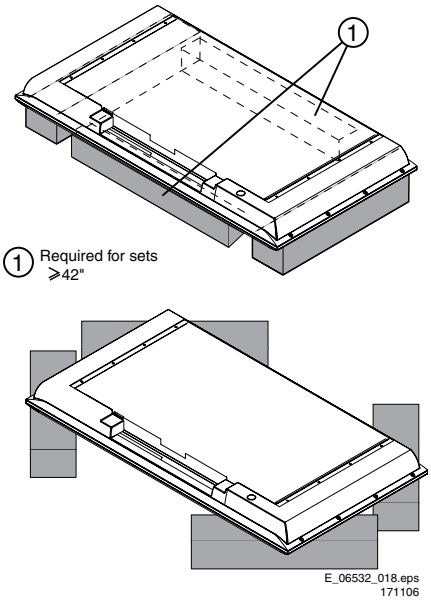

Figure 4-2 Foam bars

The foam bars (order code 3122 785 90580 for two pieces) can be used for all types and sizes of flat displays. See figure “Foam bars” for details. Displays with a size of 42” and larger, require **four** foam bars [1]. Ensure that the foam bars are always supporting the cabinet and **never** only the display.
Caution: Failure to follow these guidelines can seriously damage the display!
By laying the TV face down on the (ESD protective) foam bars, a stable situation is created to perform measurements and alignments. By placing a mirror under the display, you can monitor the screen.

4.1.3 Torque Values

Table 4-1 Recommended Torque Values

Screw Type (cross head)	Recommended Torque Value
M2	2.0 kg*F ± 0.1 kg*F
M2.5	3.0 kg*F ± 0.5 kg*F
M2.6	3.0 kg*F ± 0.5 kg*F
M3	6.0 kg*F ± 0.5 kg*F

4.2 Model LC260WX2

4.2.1 Control Board (T-CON Board)

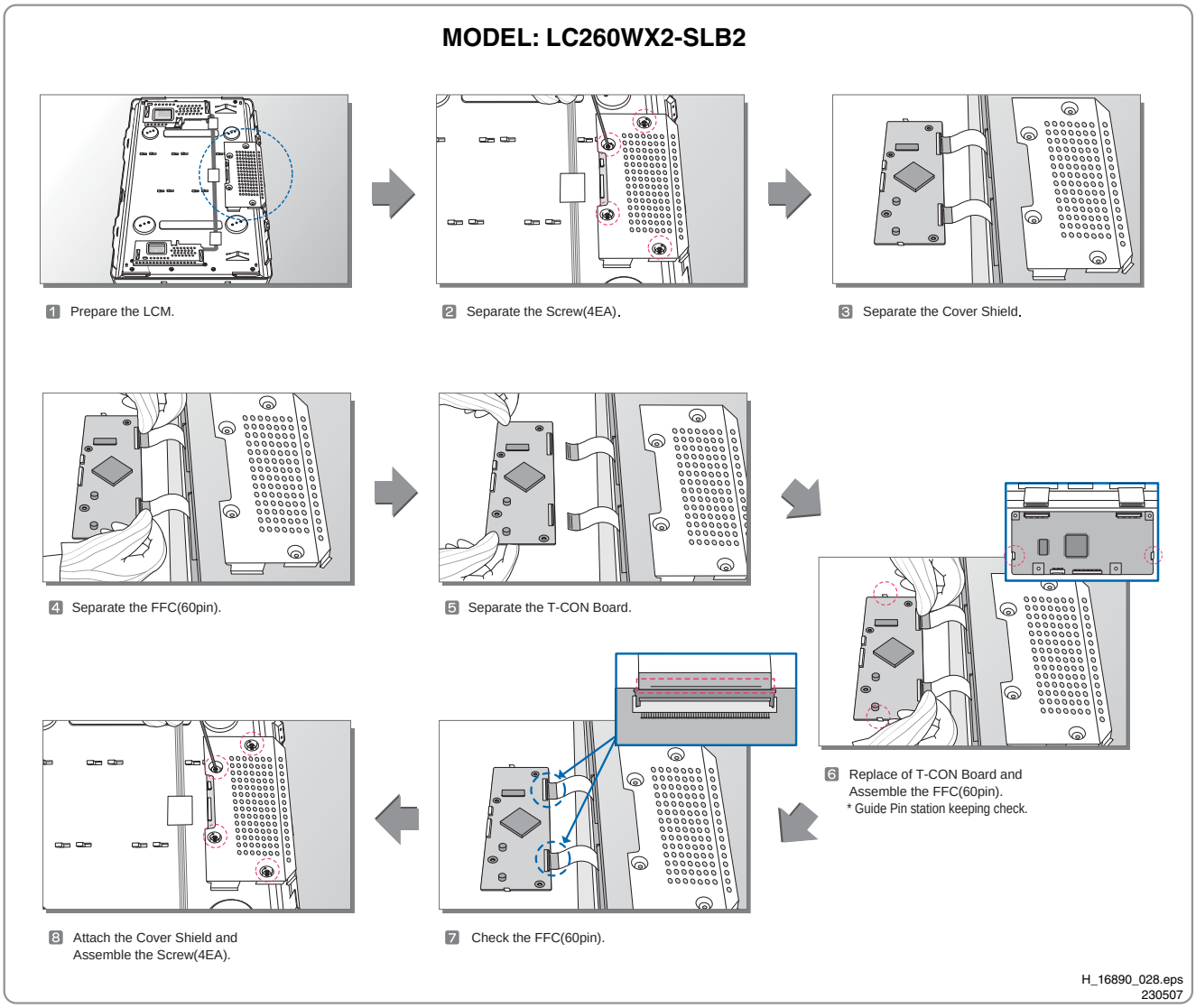

Figure 4-3 Replacement instructions T-CON board

4.2.2 Inverter (Master) Board

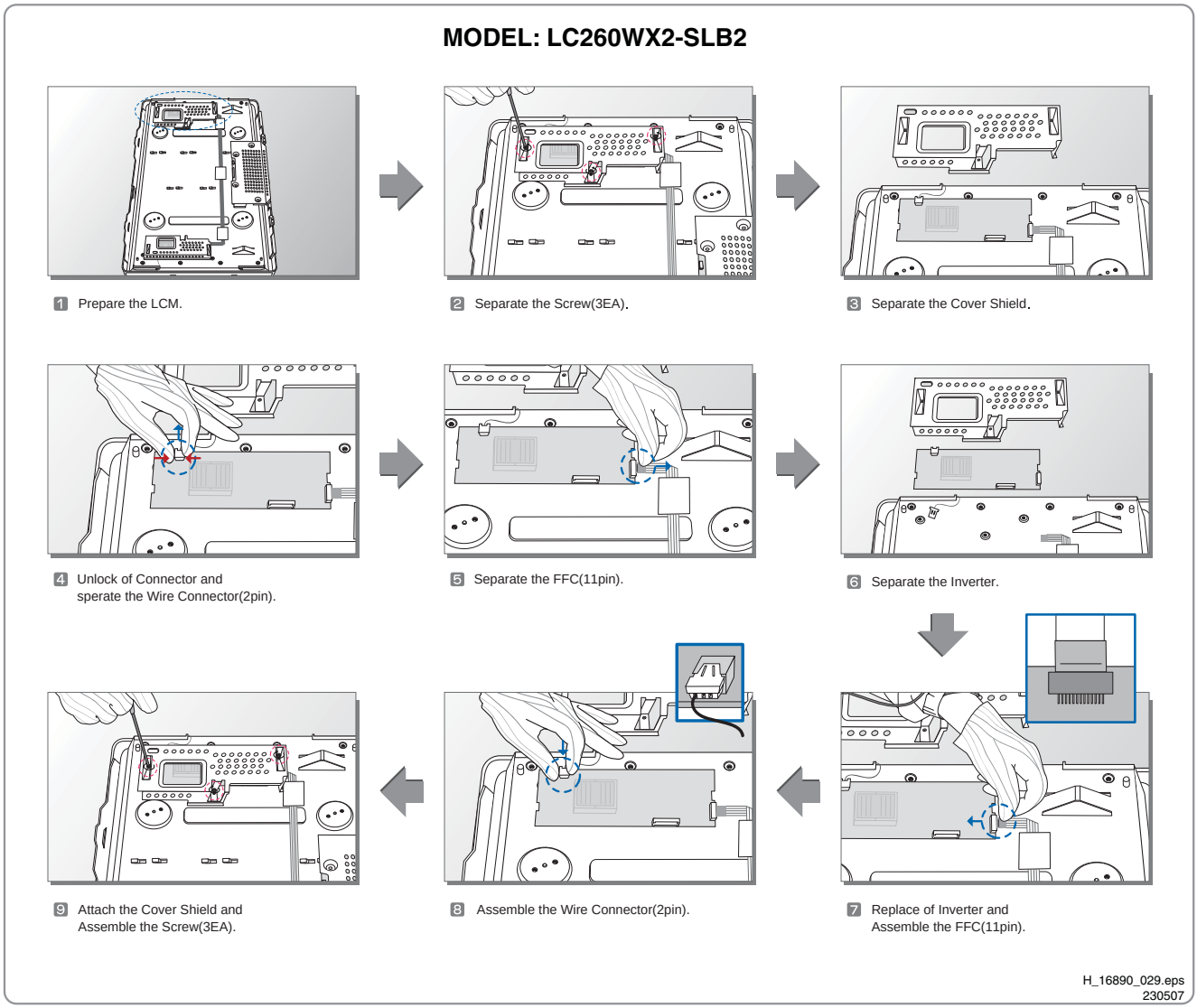

Figure 4-4 Replacement instructions Inverter (master) board

4.2.3 Inverter (Slave) Board

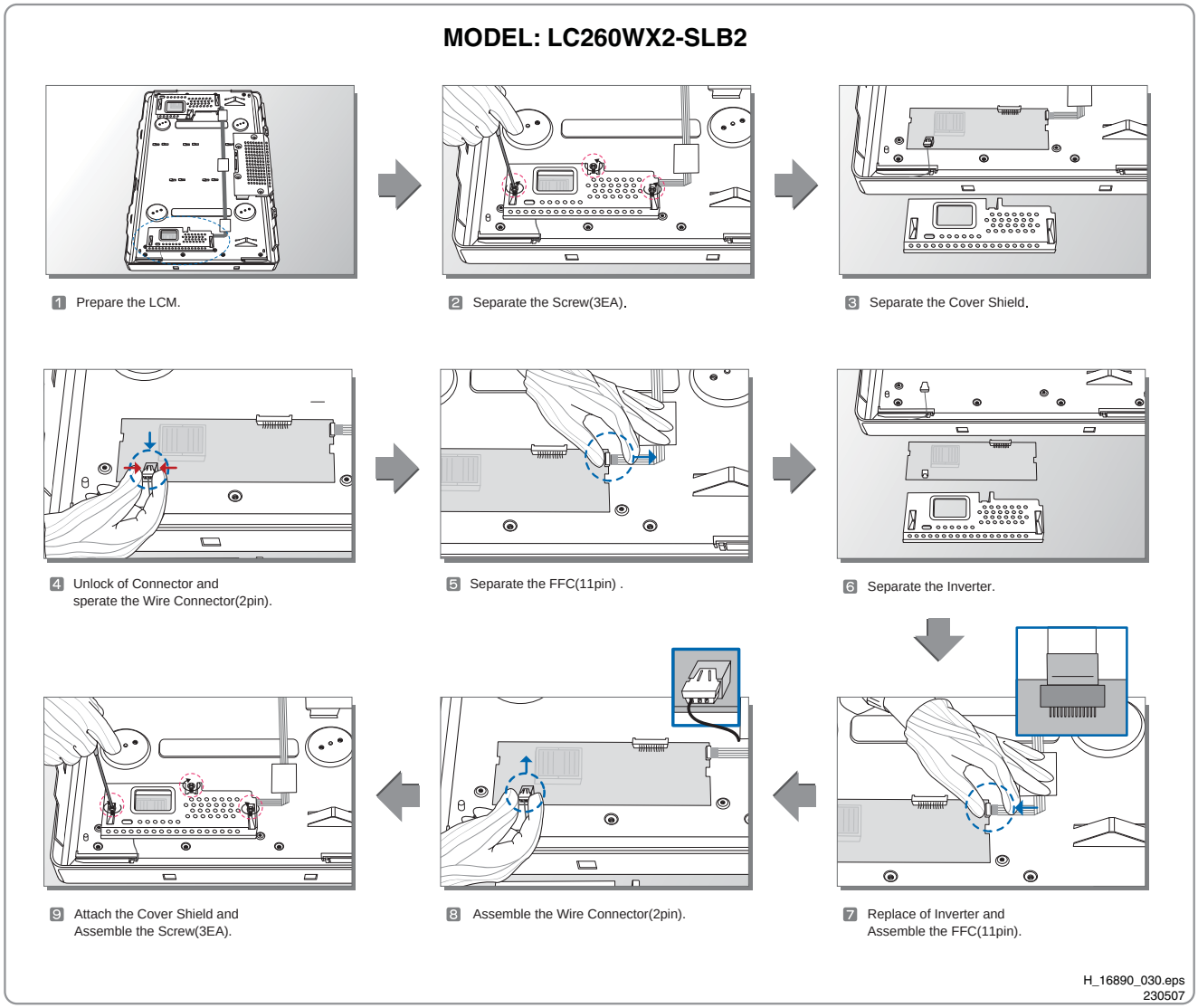

Figure 4-5 Replacement instructions Inverter (slave) board

4.3 Model LC320W01

4.3.1 Control Board (T-CON Board)

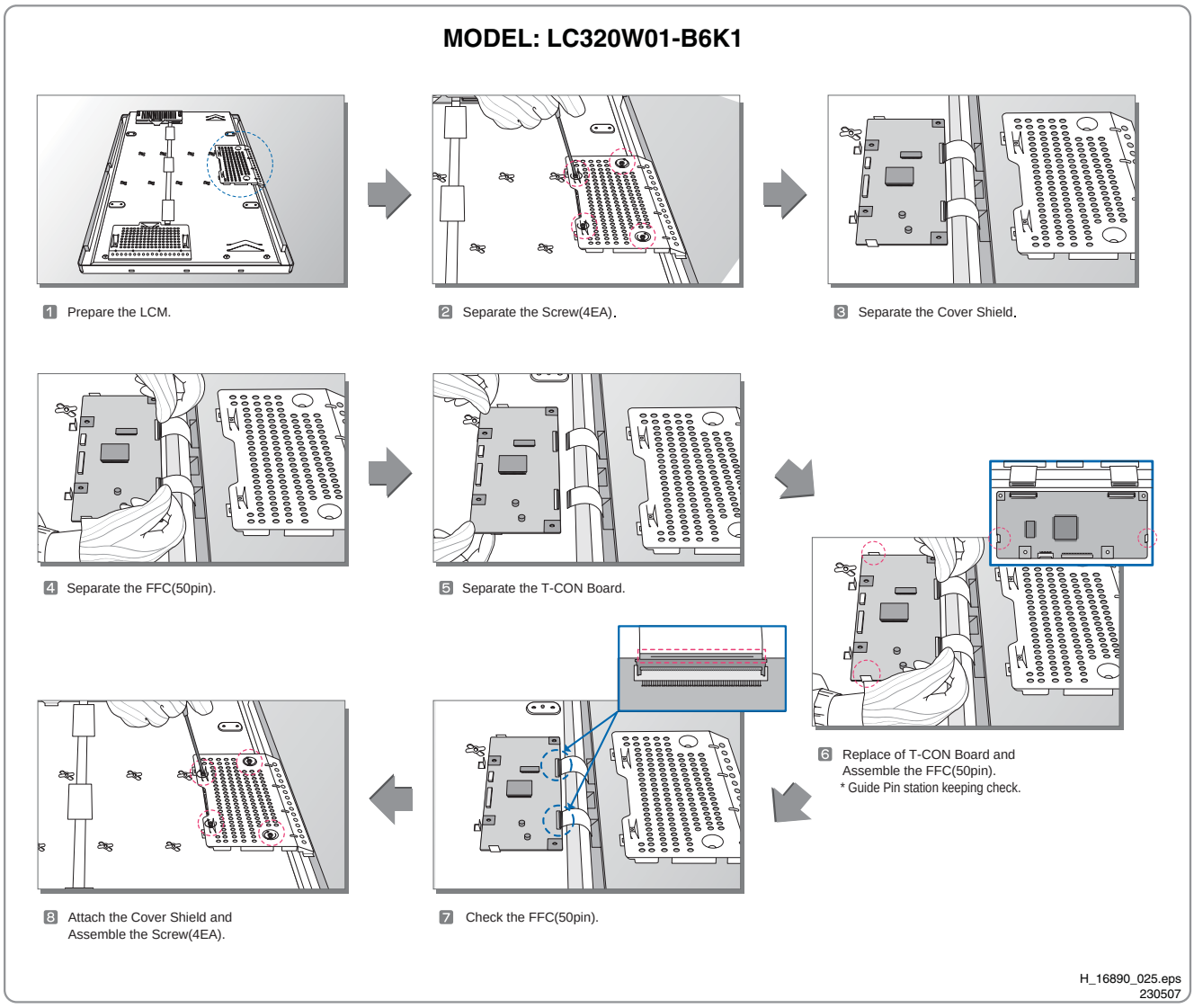

Figure 4-6 Replacement instructions T-CON board

4.3.2 Inverter (Master) Board

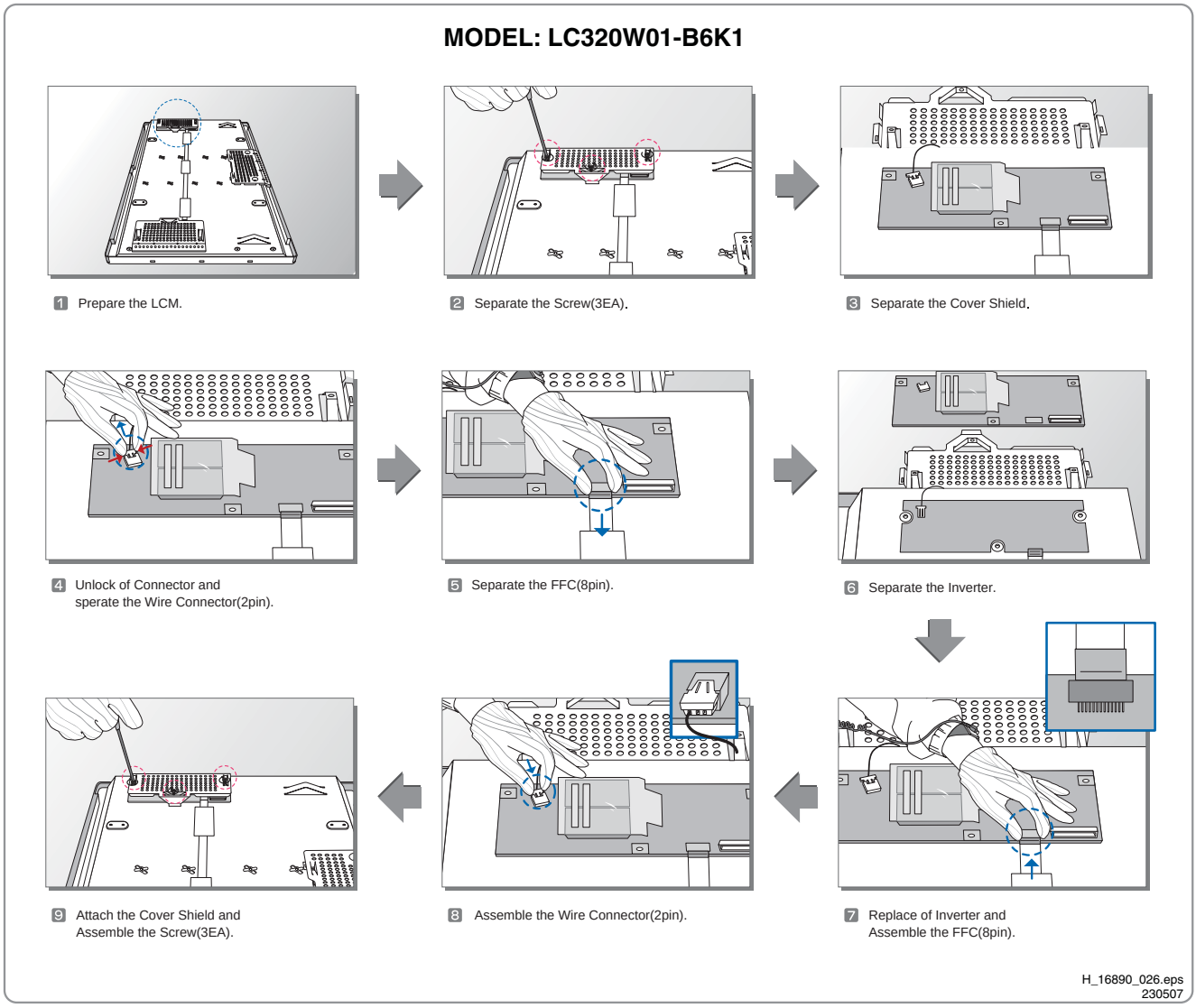

Figure 4-7 Replacement instructions Inverter (master) board

4.3.3 Inverter (Slave) Board

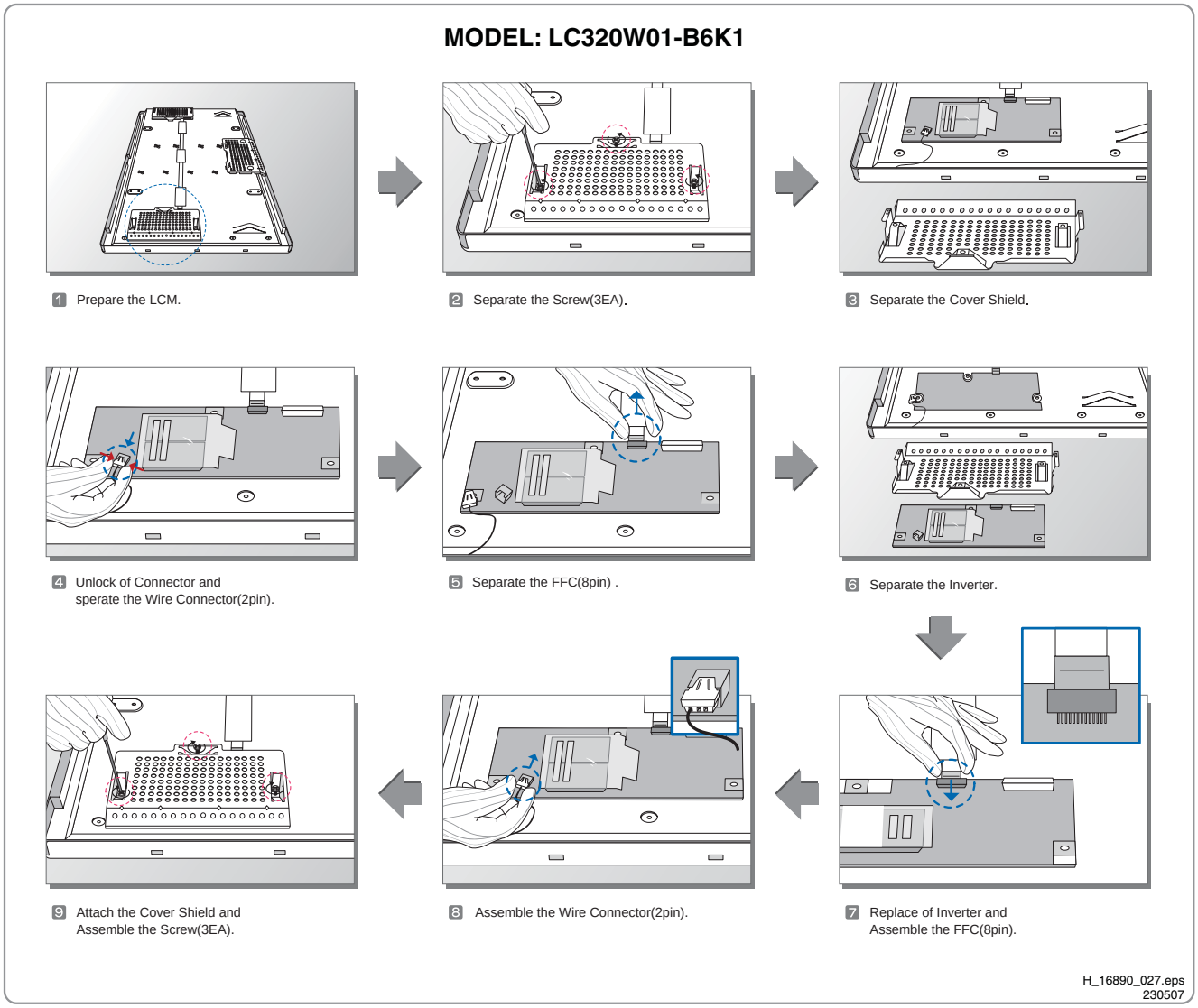

Figure 4-8 Replacement instructions Inverter (slave) board

4.4 Model LC320WX2

4.4.1 Control Board (T-CON Board)

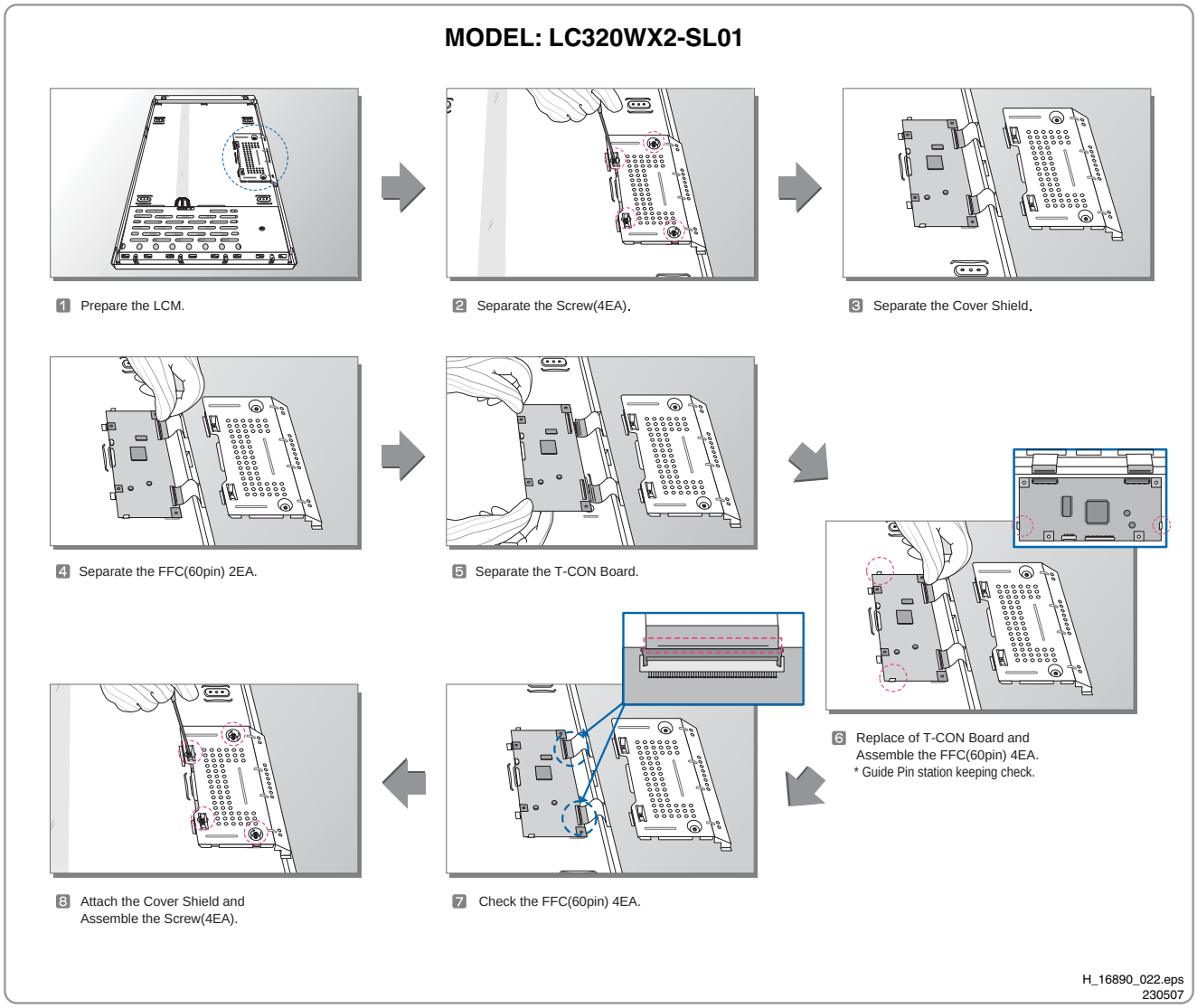

Figure 4-9 Replacement instructions T-CON board

4.4.2 Inverter Board

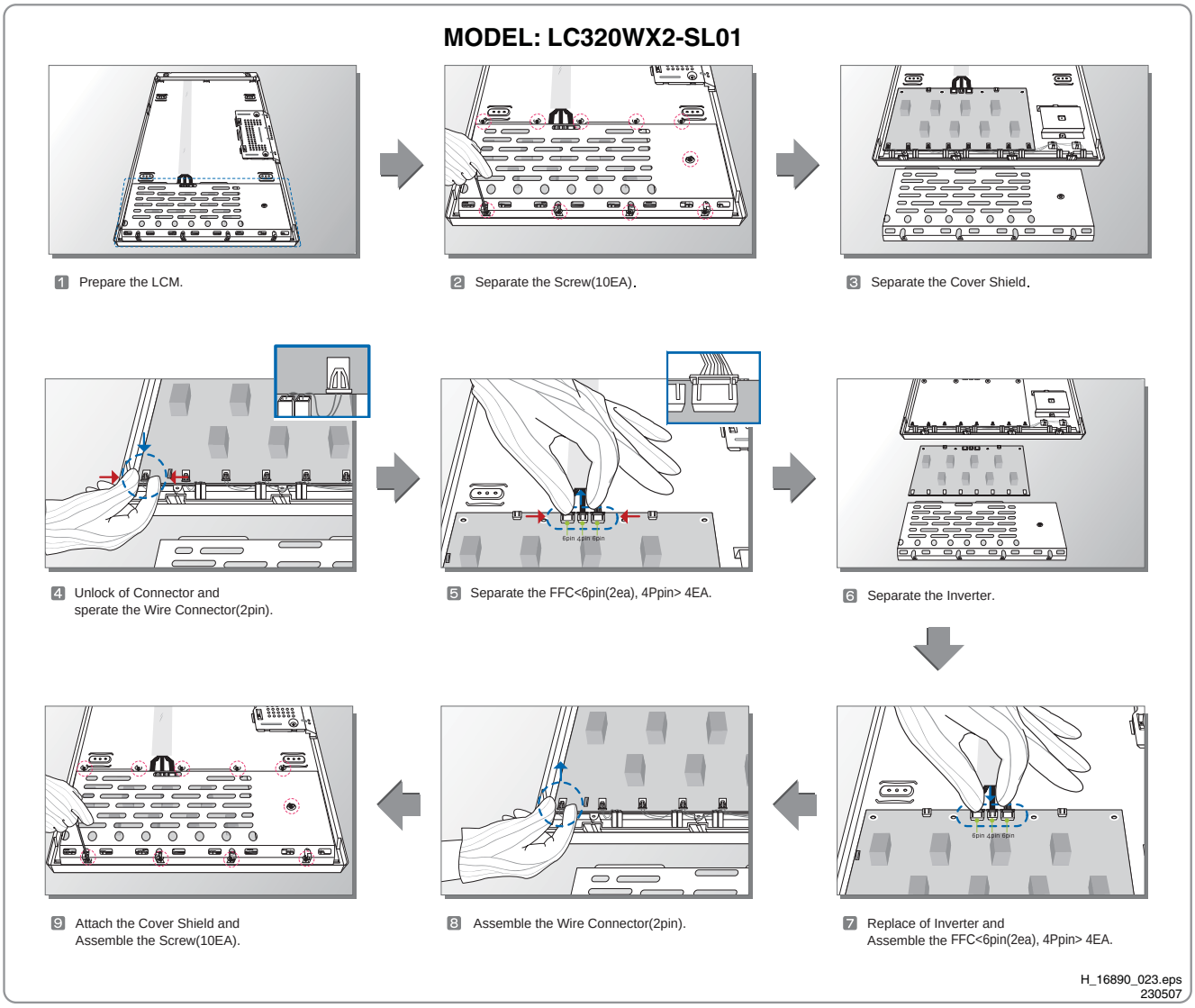

Figure 4-10 Replacement instructions Inverter board

4.5 Model LC420WU2

4.5.1 Control Board (T-CON Board)

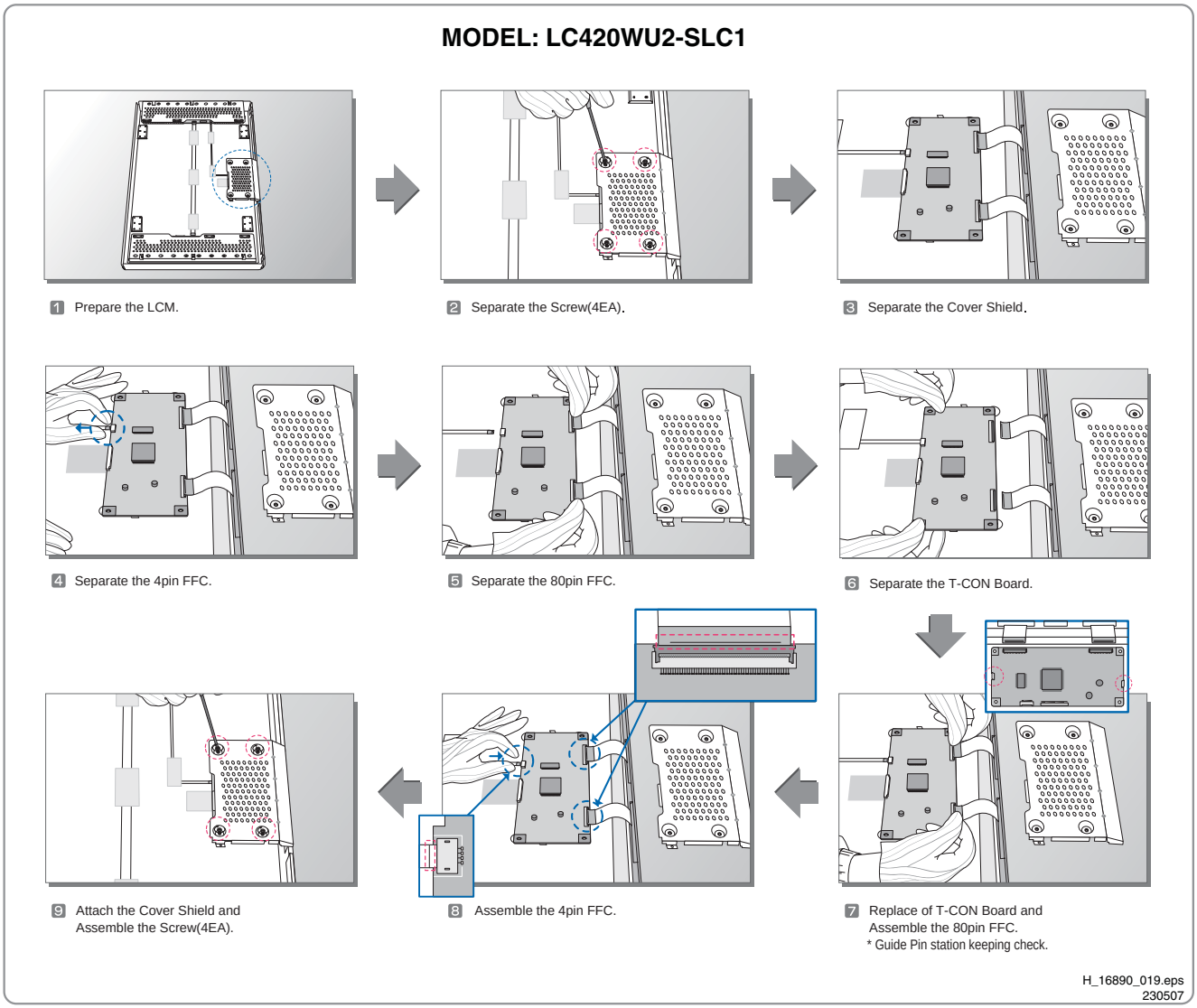

Figure 4-11 Replacement instructions T-CON board

4.5.2 Inverter (Master) Board

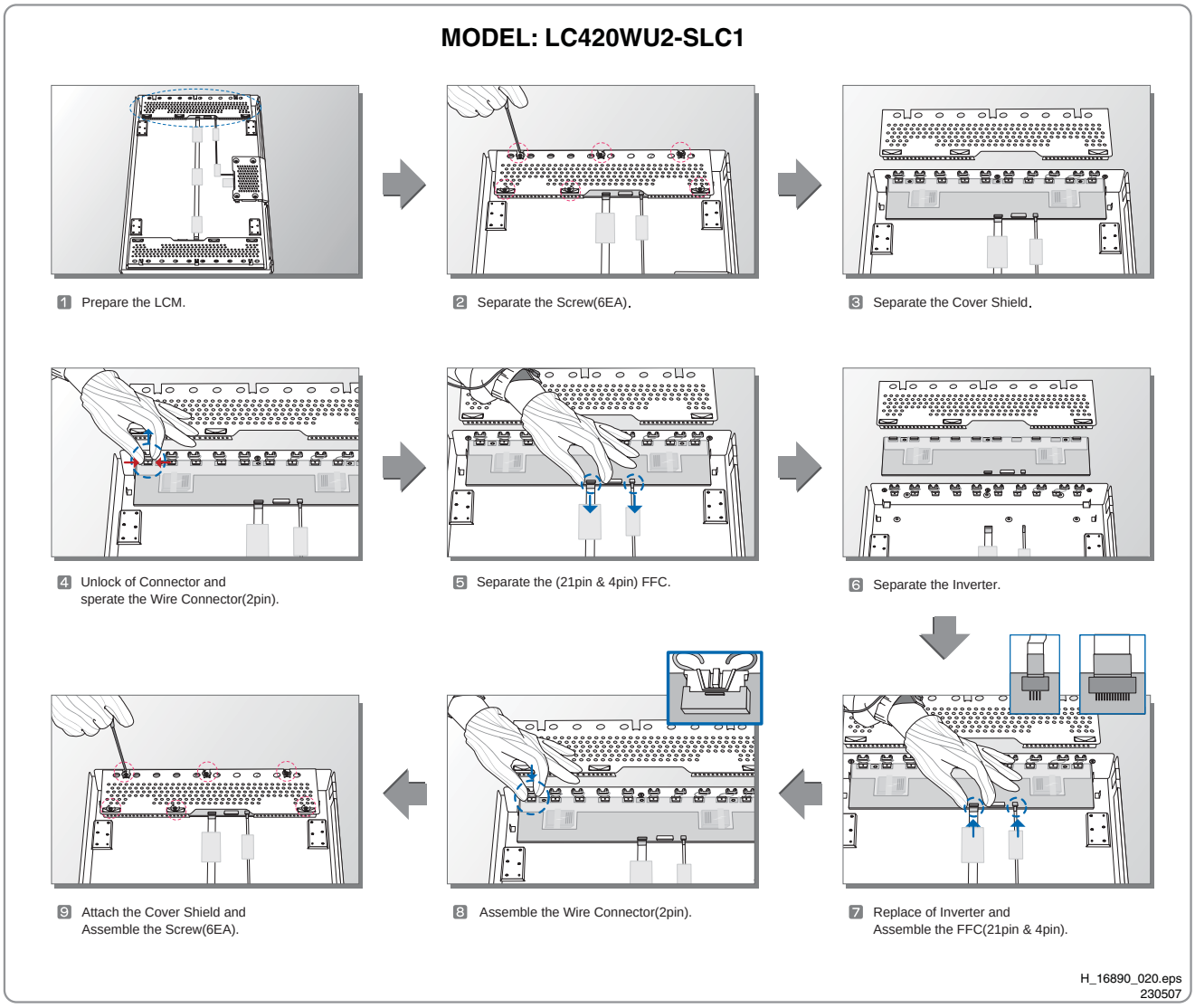

Figure 4-12 Replacement instructions Inverter (master) board

4.5.3 Inverter (Slave) Board

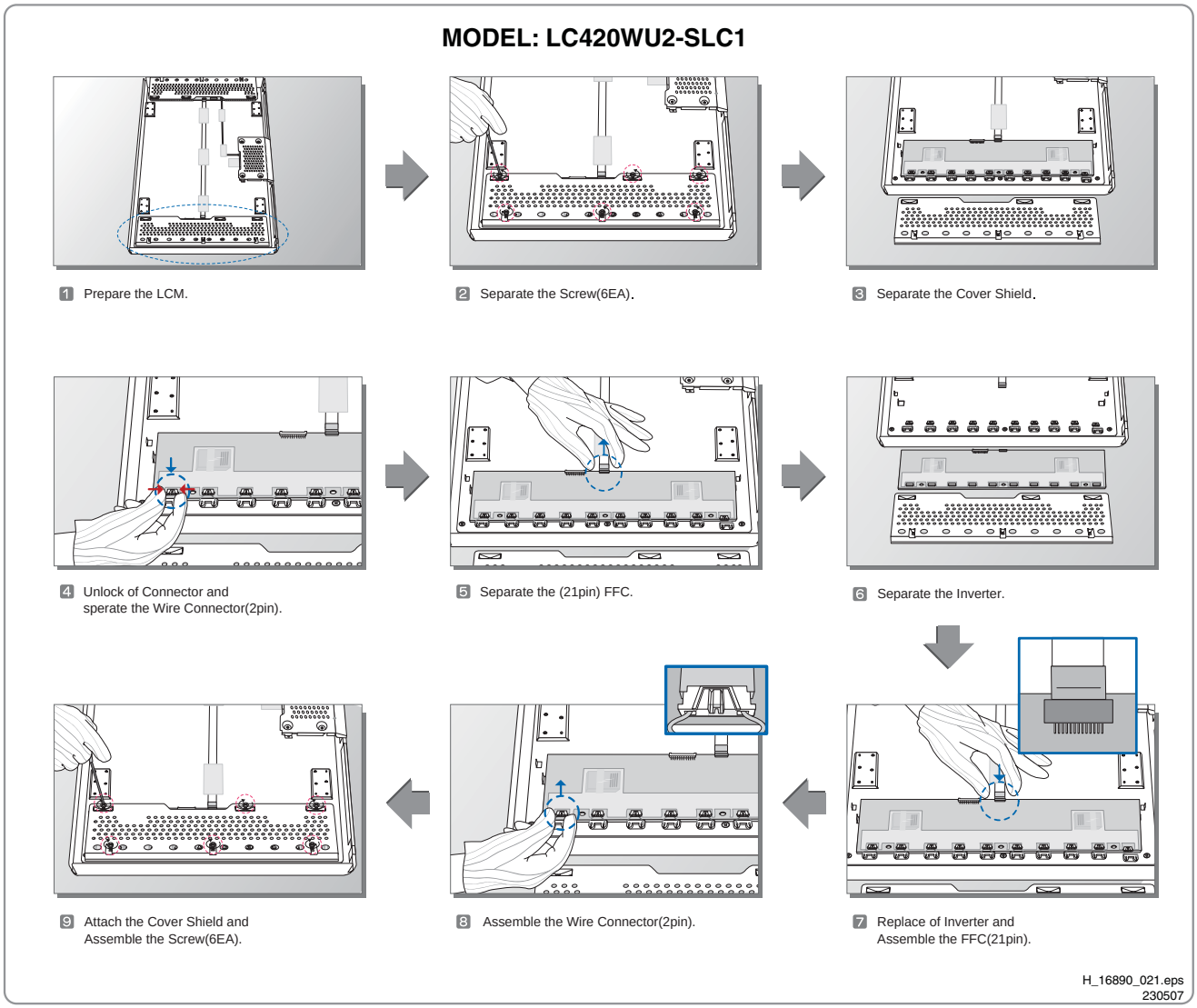

Figure 4-13 Replacement instructions Inverter (slave) board

4.6 Model LC420WX2

4.6.1 Control Board (T-CON Board)

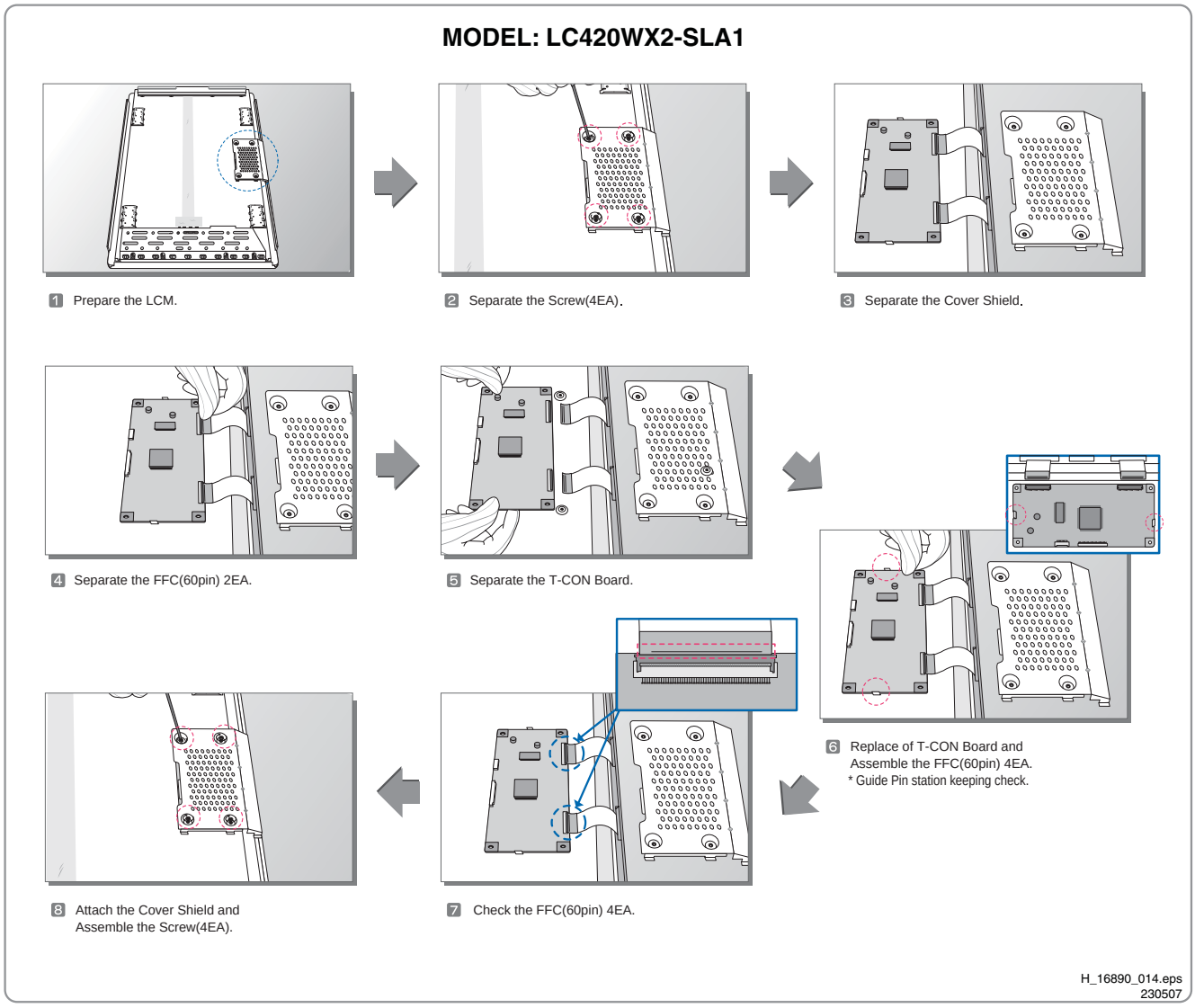

Figure 4-14 Replacement instructions T-CON board

4.6.2 Inverter Board

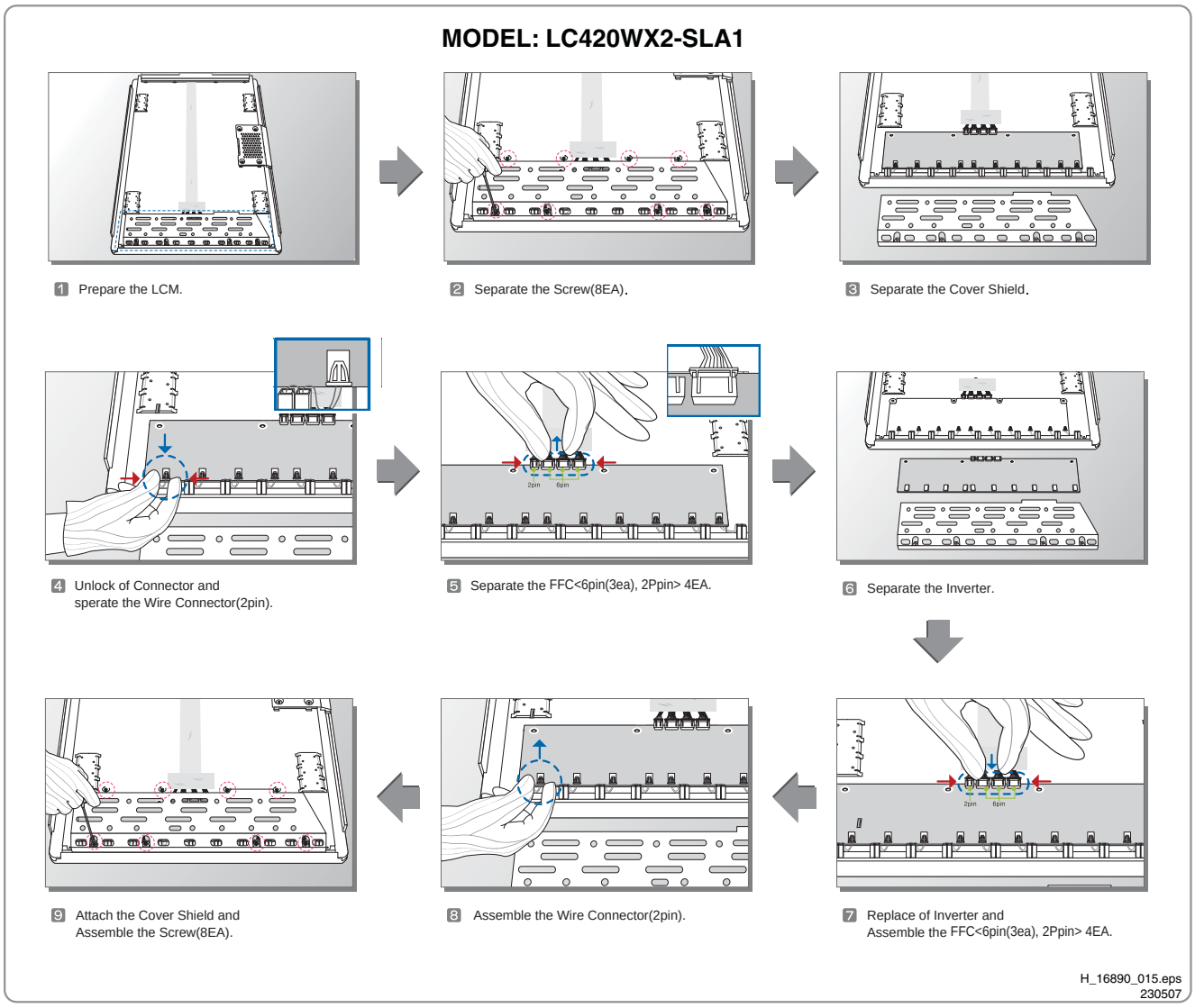

Figure 4-15 Replacement instructions Inverter board

4.7 Model LC420WX3

4.7.1 Control Board (T-CON Board)

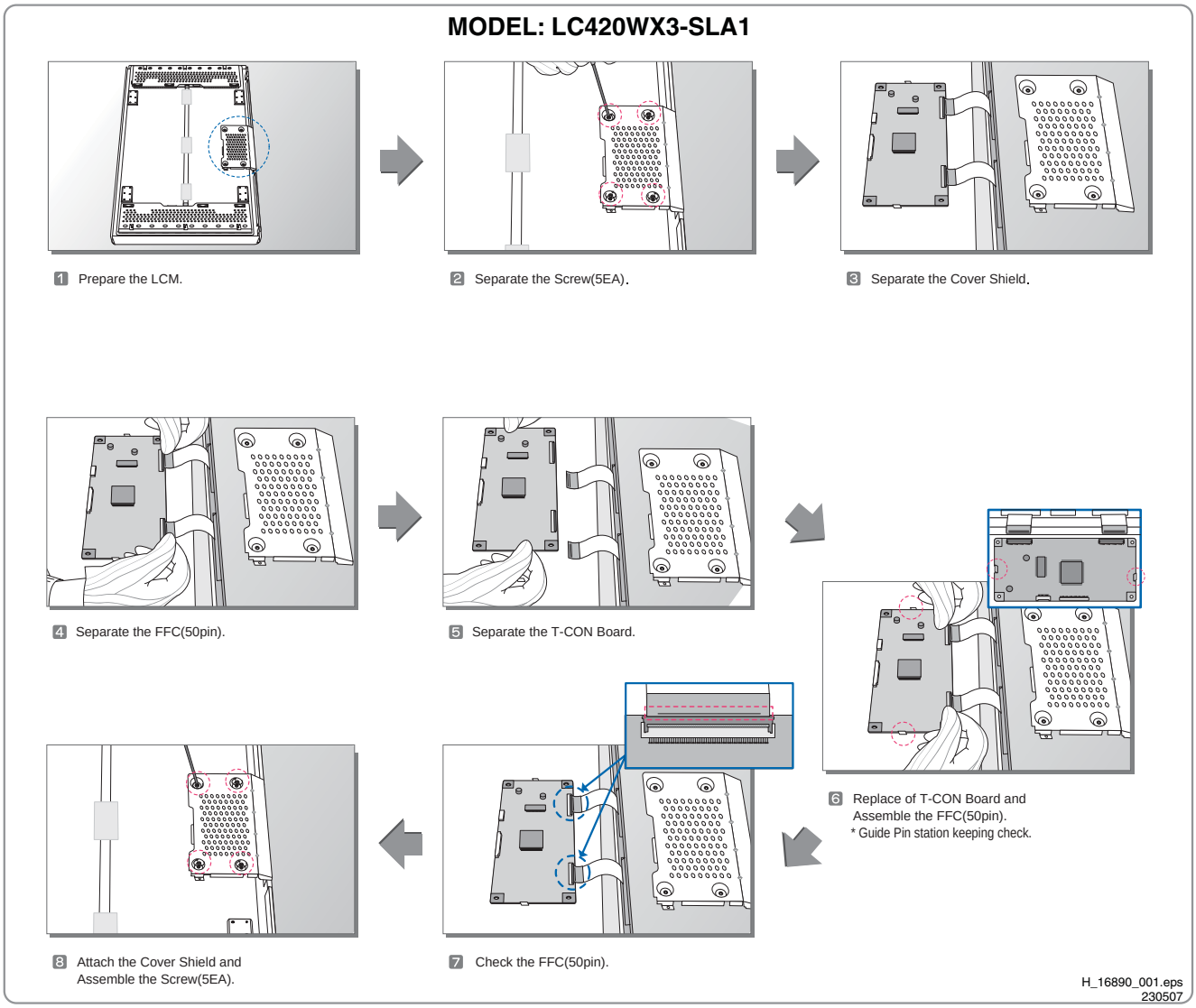

Figure 4-16 Replacement instructions T-CON board

4.7.2 Inverter (Master) Board

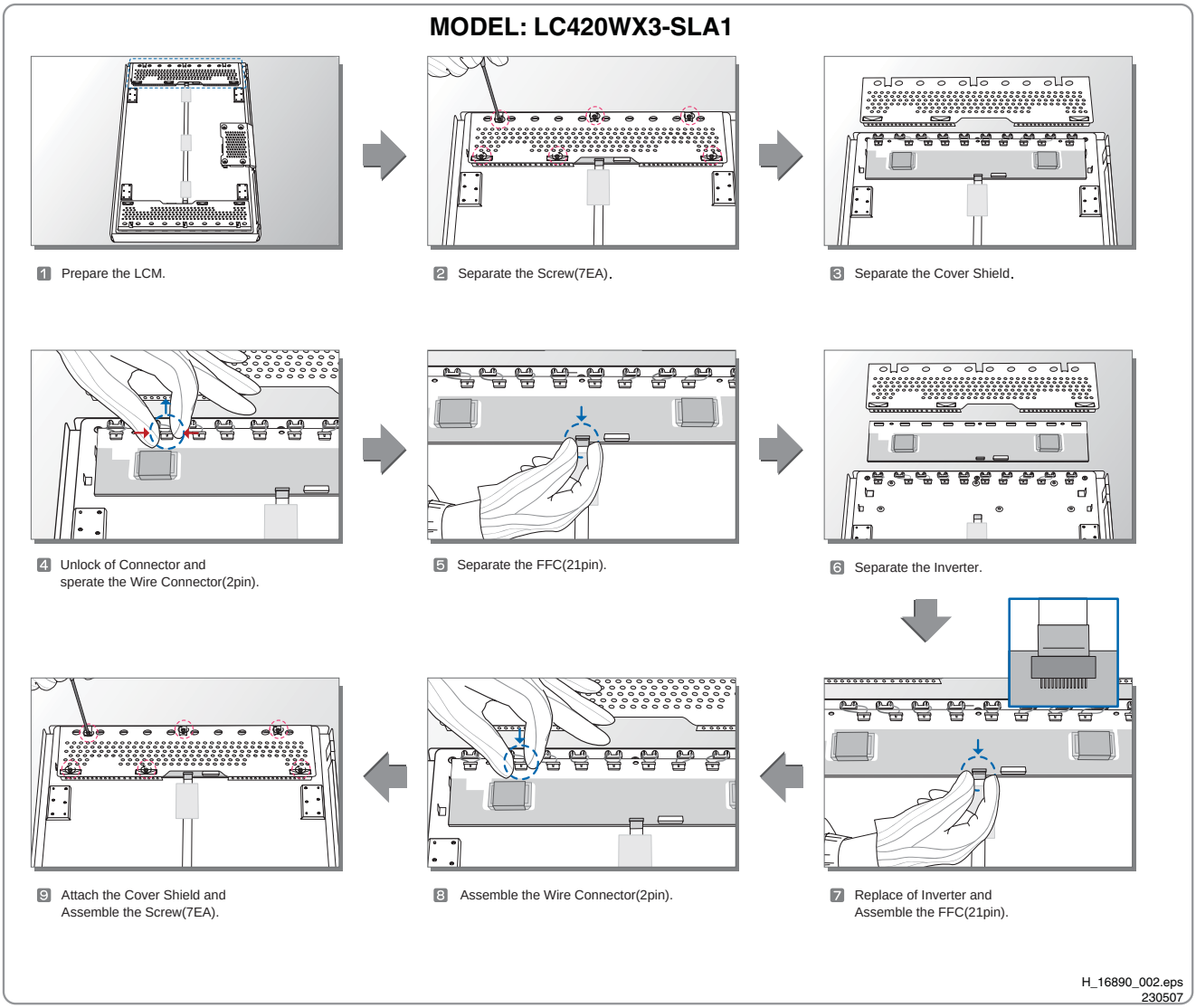

Figure 4-17 Replacement instructions Inverter (master) board

4.7.3 Inverter (Slave) Board

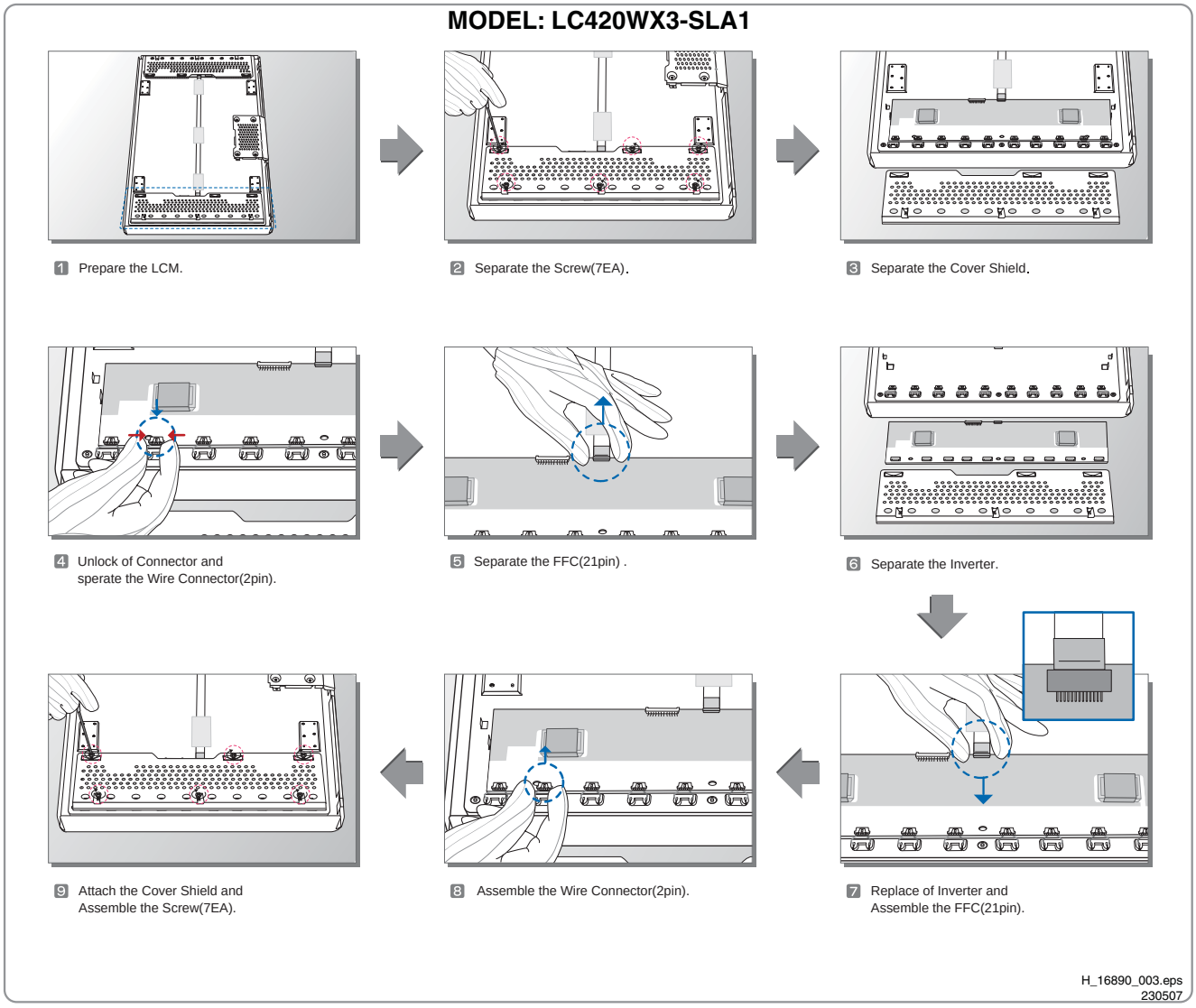

Figure 4-18 Replacement instructions Inverter (slave) board

4.8 Model LC420WX5

4.8.1 Control Board (T-CON Board)

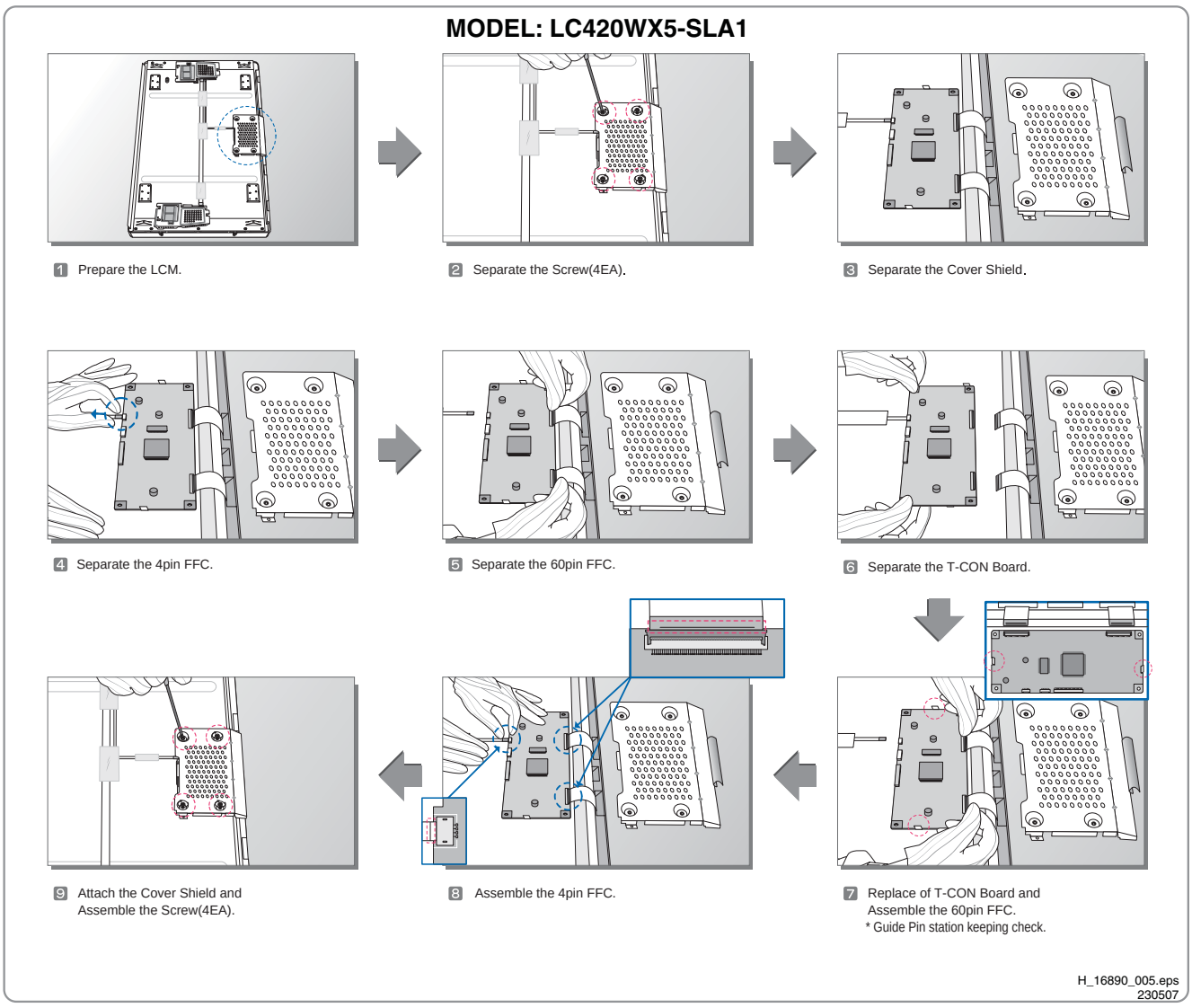

Figure 4-19 Replacement instructions T-CON board

4.8.2 Inverter (Master) Board

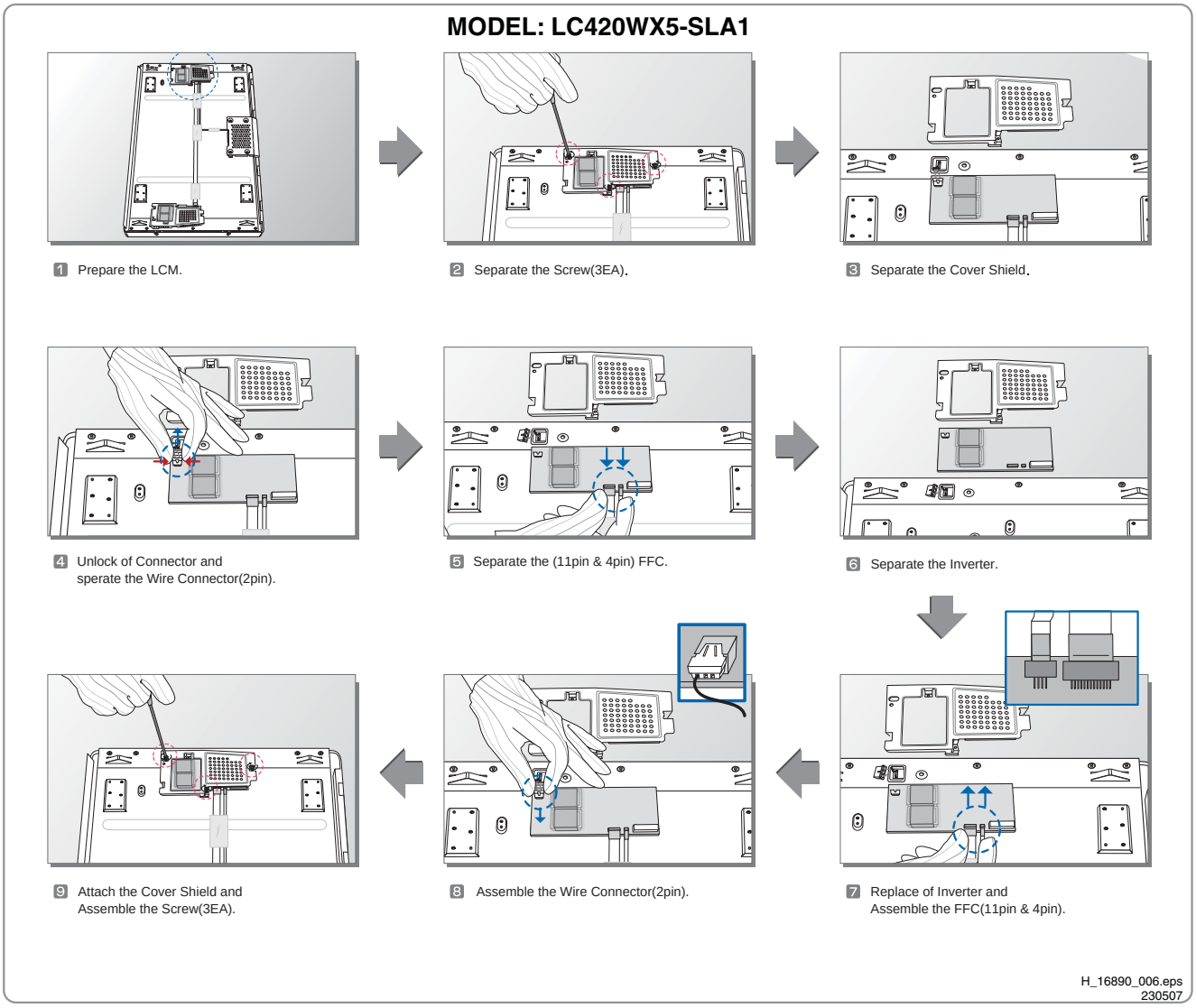

Figure 4-20 Replacement instructions Inverter (master) board

4.8.3 Inverter (Slave) Board

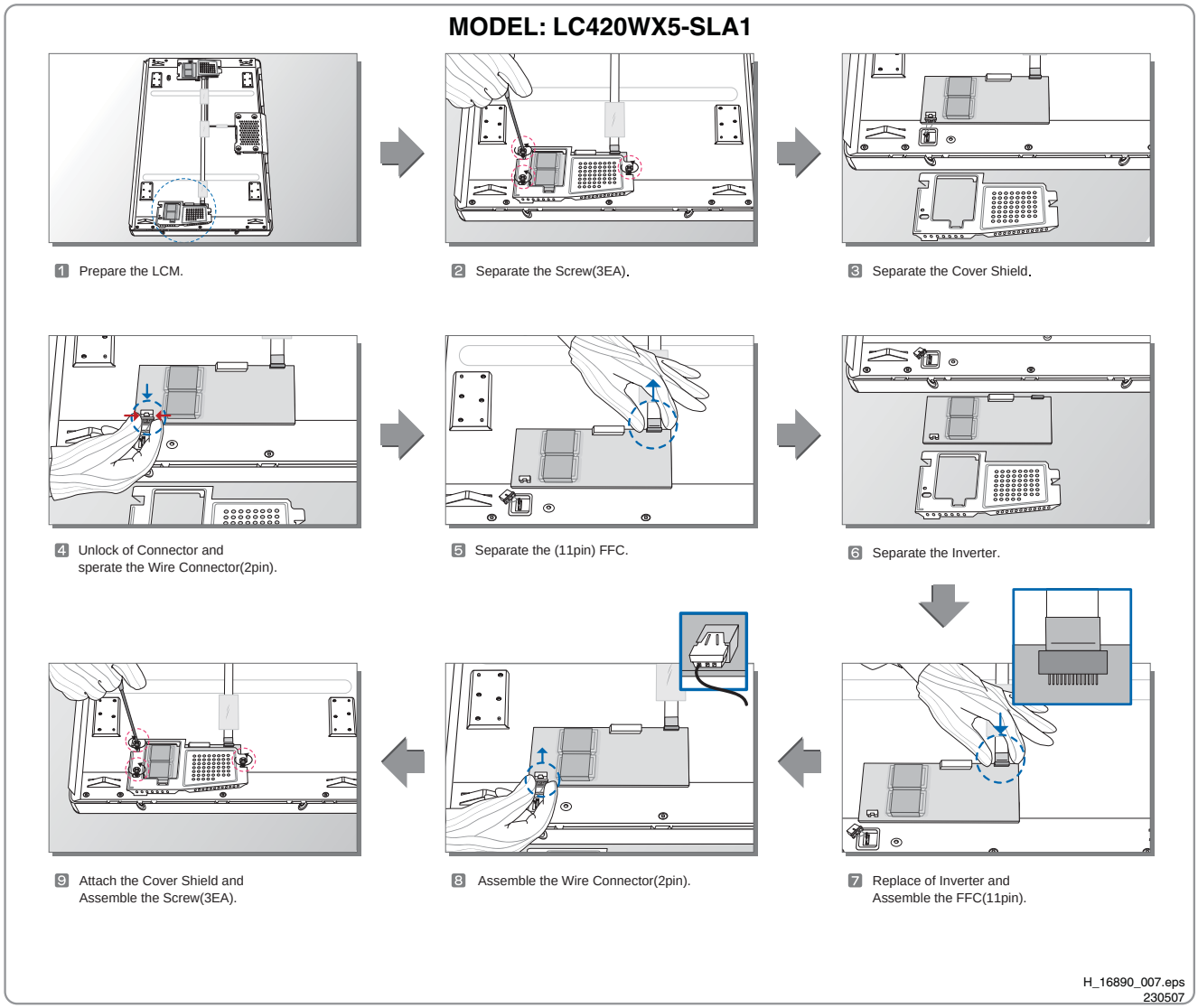

Figure 4-21 Replacement instructions Inverter (slave) board

4.9 Model LC470WU1

4.9.1 Control Board (T-CON Board)

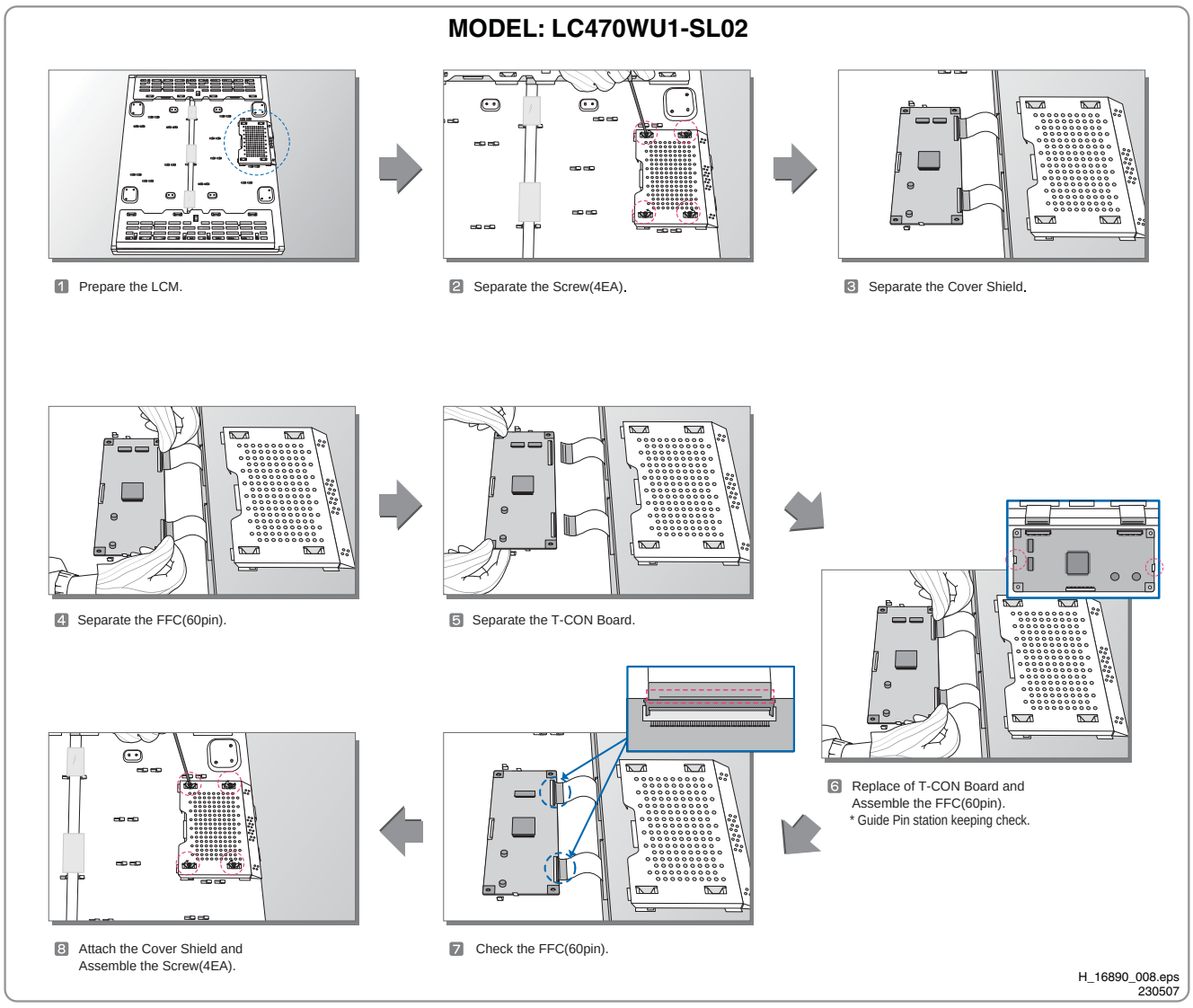

Figure 4-22 Replacement instructions T-CON board

4.9.2 Inverter (Master) Board

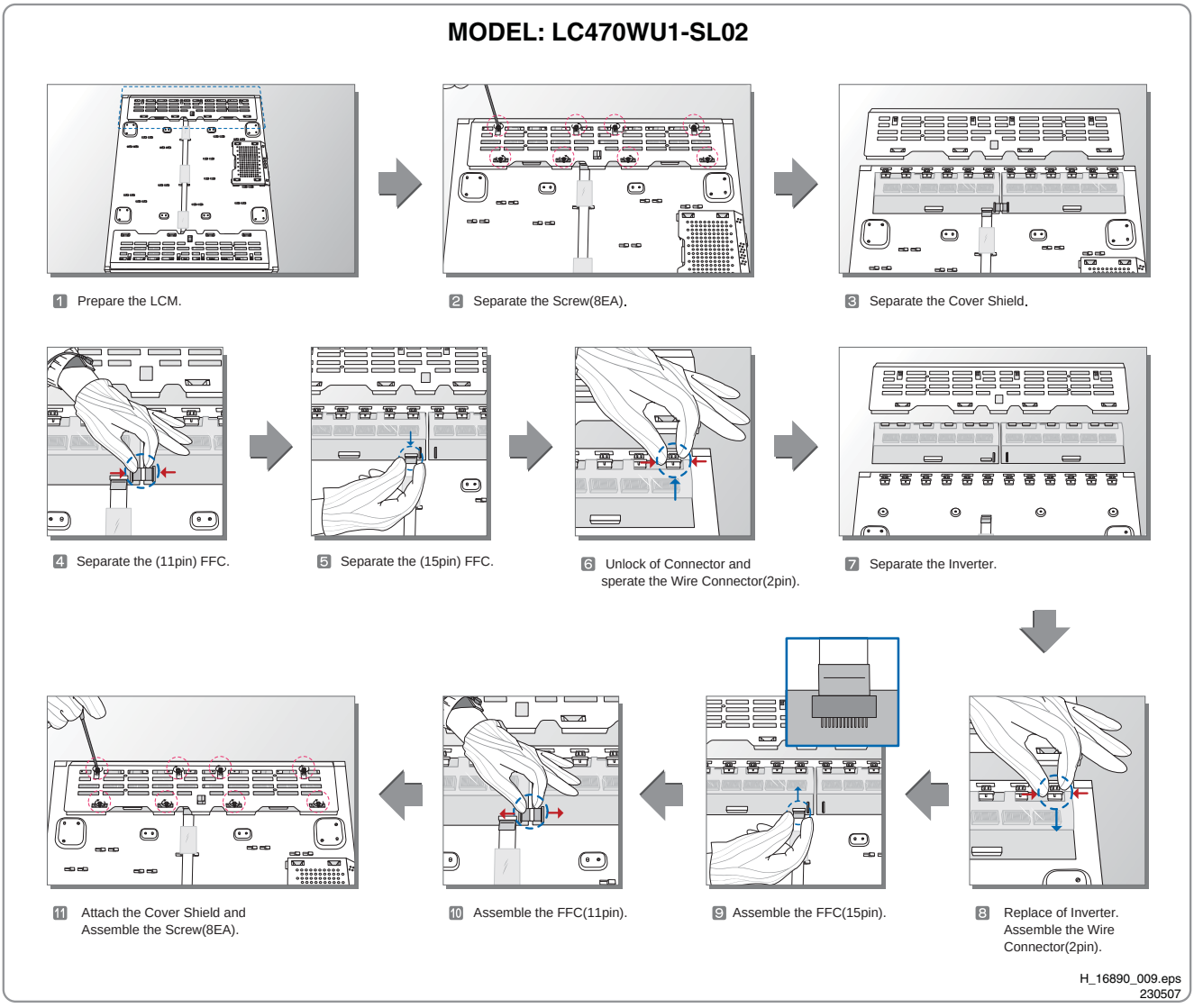

Figure 4-23 Replacement instructions Inverter (master) board

4.9.3 Inverter (Slave) Board

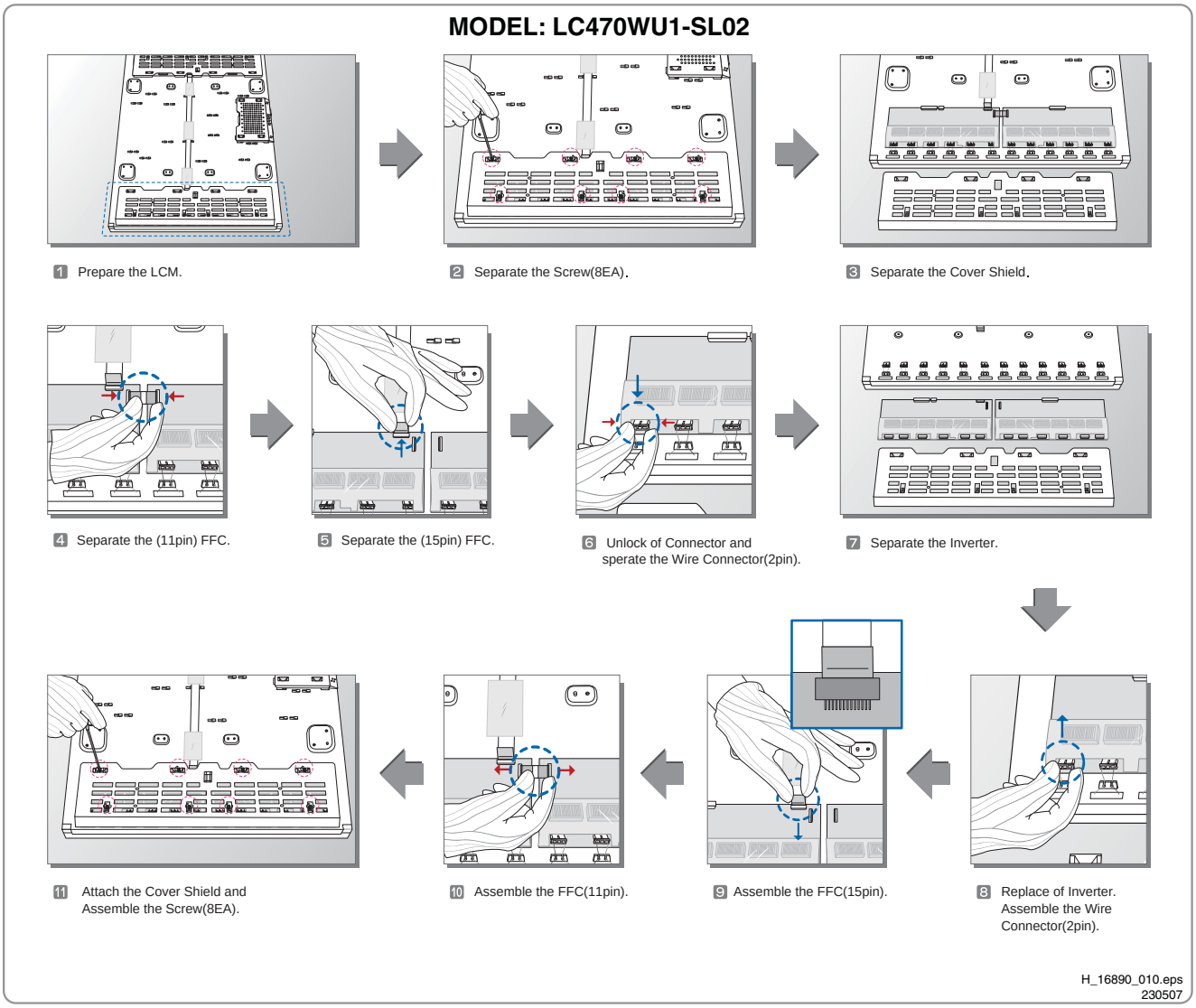

Figure 4-24 Replacement instructions Inverter (slave) board

4.10 Model LC470WU4

4.10.1 Control Board (T-CON Board)

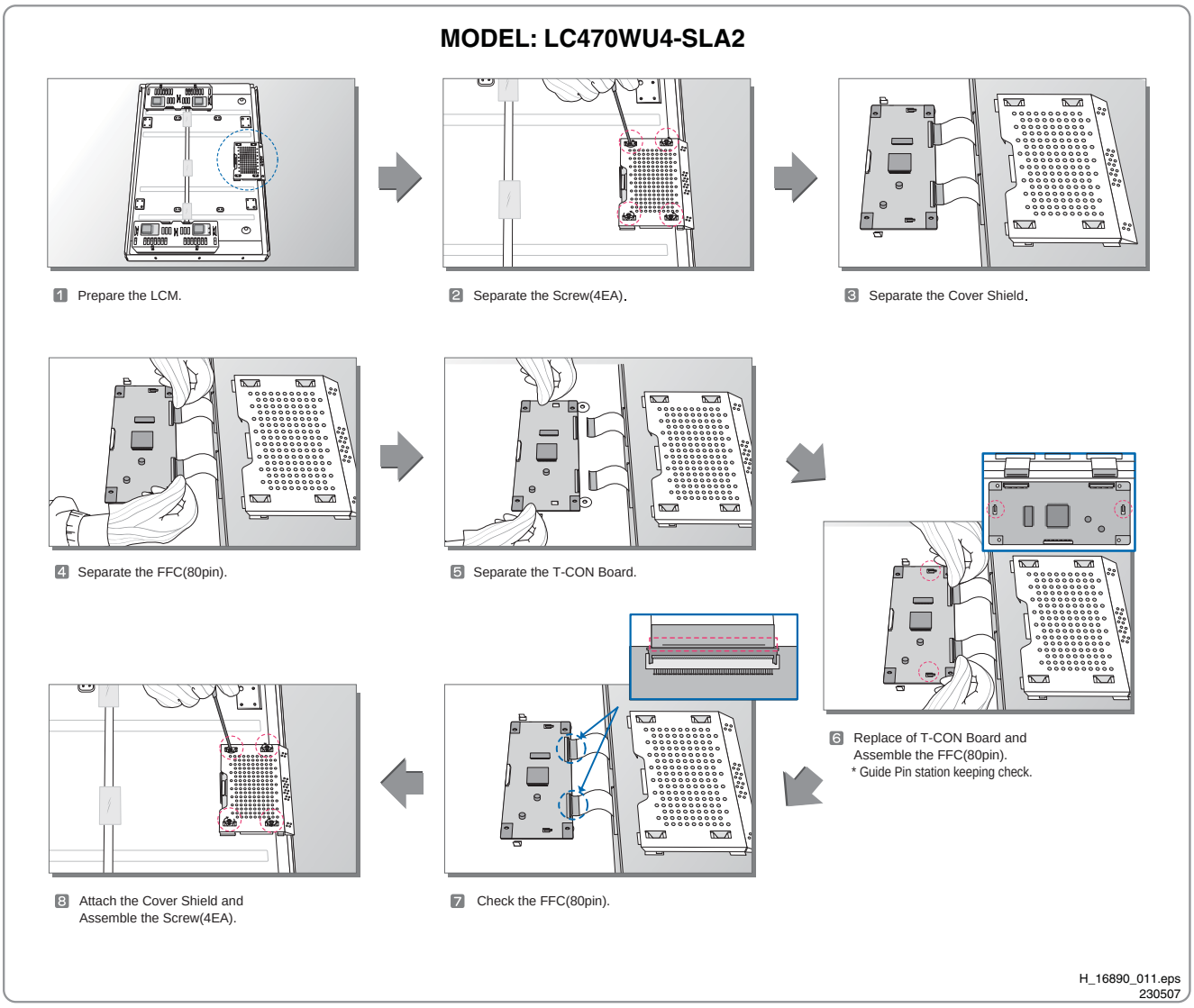

Figure 4-25 Replacement instructions T-CON board

4.10.2 Inverter (Master) Board

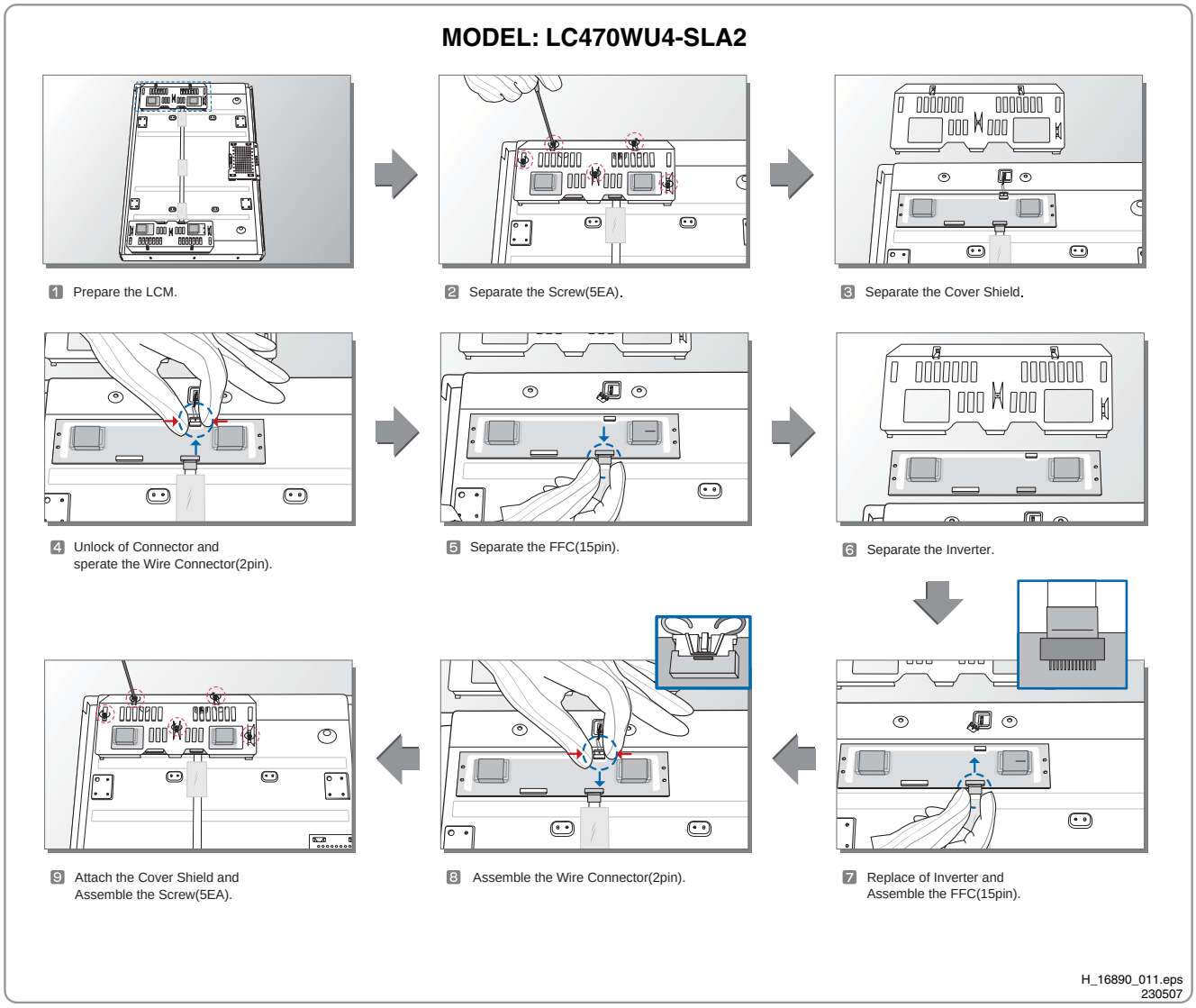

Figure 4-26 Replacement instructions Inverter (master) board

4.10.3 Inverter (Slave) Board

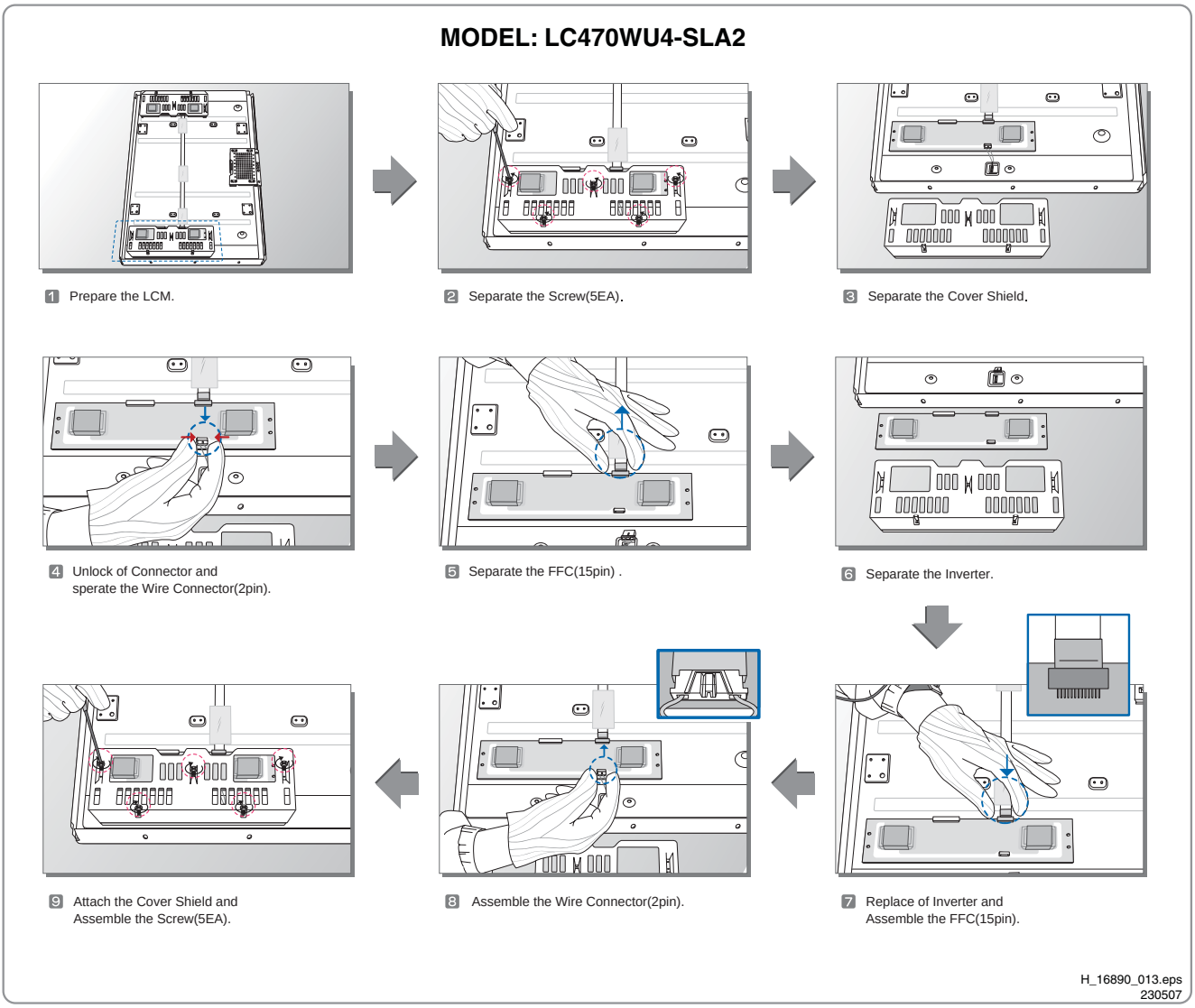

Figure 4-27 Replacement instructions Inverter (slave) board

5. Service Modes, Error Codes, and Fault Finding

Index of this chapter:

5.1 Service Modes
5.2 Error Codes
5.3 Fault Finding

5.1 Service Modes

Not applicable.

5.2 Error Codes

Not applicable.

5.3 Fault Finding

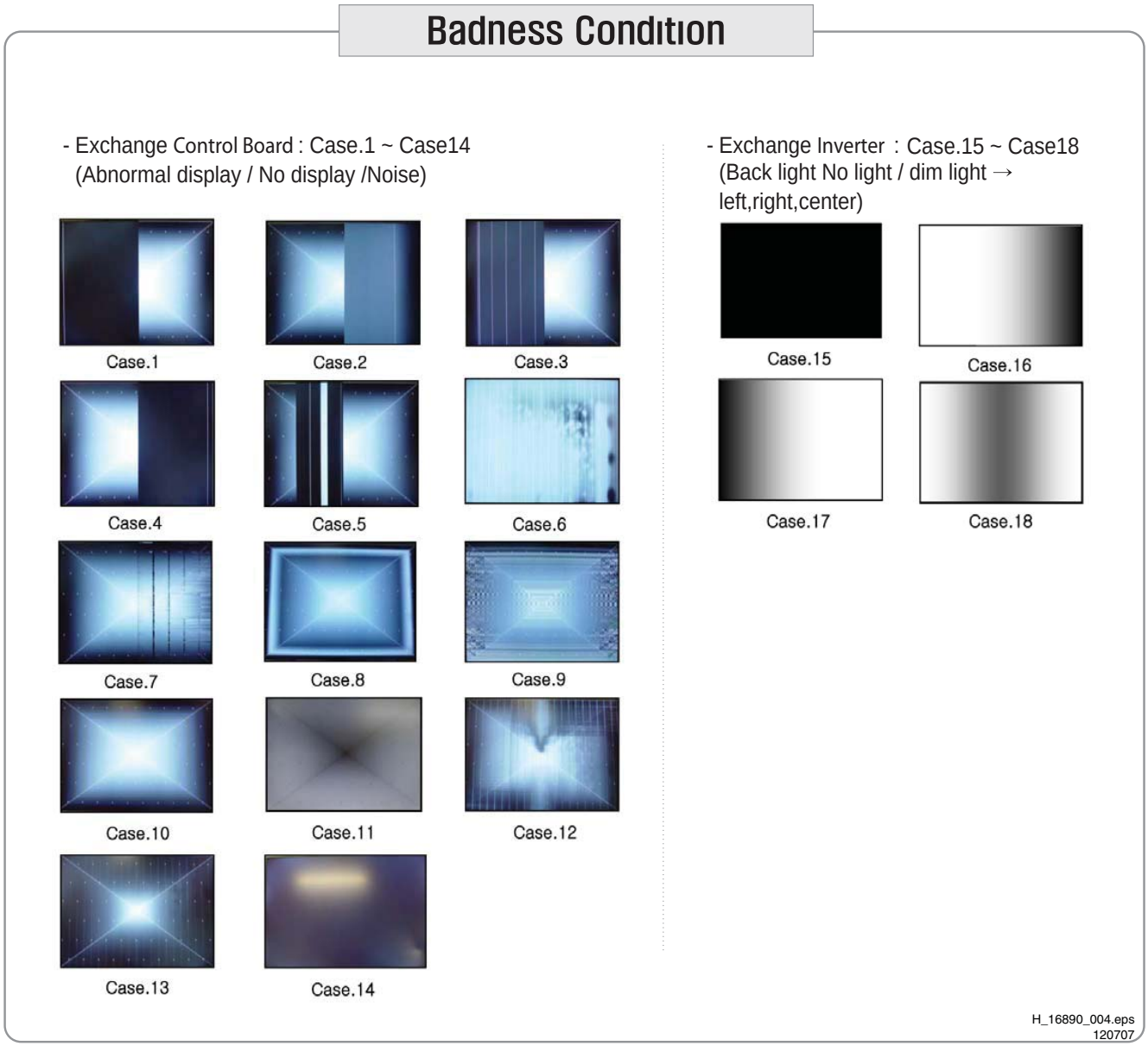

Figure 5-1 Symptom/Cure overview

6. Block Diagrams, Test Point Overviews, and Waveforms

Not applicable.

7. Circuit Diagrams and PWB Layouts

Not applicable

8. Alignments

Not applicable.

9. Circuit Descriptions, Abbreviation List, and IC Data Sheets

9.1 Circuit Descriptions

Not applicable

9.2 Abbreviation List

AUO	Acer Unipack Optronics (supplier)
CCFL	Cold Cathode Fluorescent Lamp
CMO	Chi Mei Optronics (supplier)
COF	Chip On Flex / Foil / Film
CPT	Chunghwa Picture Tubes (supplier)
DC	Direct Current
FET	Field Effect Transistor
FFC	Flat Foil Cable
FPC	Flexible Printed Circuit
IC	Integrated Circuit
LCD	Liquid Crystal Display
LCM	Liquid Crystal Module
LED	Light Emitting Diode
LPL	LG Philips LCD (supplier)
PCB	Printed Circuit Board (same as PWB)
PSU	Power Supply Unit
PWB	Printed Wiring Board (same as PCB)
RGB	Red, Green, Blue colour space
TCP	Tape Carrier Package

9.3 IC Data Sheets

Not applicable

10. Spare Parts List

Please refer to the Philips Service website, for an actual overview (monthly updated).

11. Revision List

Manual xxxx xxx xxxx.0

- First release.

Service Database - LPL LCD Panels * October 2007 *

Owners: M. Werff / R. Tromp

Source	LSDB	LSDB	Supplier	SPA2	Supplier	SPA2	Supplier	SPA2	BG Service	Supplier	BG Service	BG Service	BG Service	PIXEL spec								Diversity			
GDC	LCD Component 12NC	LCD Name	Inverter Master Name	Inverter Master 12NC	Inverter Slave Name	Inverter Slave 12NC	Control Board Name	Control Board 12NC	CR date or entered on Spare parts list in SAP/SAP2	EOL per	Compatible alternative	Successor 12NC	Instruction note	Max. amount of bright dots	Max. amount of tiny bright dots (50%-75%)	Max. amount of dark dots	Max. amount of tiny (50%)dark dots	Total half + full blank dots	Condition: Allowed amount of adjacent dark dots	Condition: Minimum distance between dark dots	Comments	Size	Inverters belong to LCD-assy?	Lamps	V-input invertor
	9322 197 15682	LC130V01-A2							14-Aug-03	Feb '04	no alternative			0		2			0	20mm					
	9322 196 31682	LC150X01-A3K2							21-Jul-03	Mar '04	no alternative			0		2			0	20mm					
	8238 277 17371	LC150X02-A4																							
	9322 207 48682	LC150X02-A4							30-Jan-04	April '05	QD15XL16 REV 02	9322 226 55682		see comment		2			0	20mm					
	9322 223 03682	LC150X02-TL01							4-Apr-05		LC150X02-A4	9322 207 48682		see comment		2			0	20mm	15PF7846/12				
	9322 187 14682	LC151X01-C3P1							15-Apr-03	Mar '04	no alternative			0		2			0	20mm					
	9322 209 63682	LC171W03-A4K1							not in SAP		A4K5, C4	9322 211 49682		0		2			0	20mm					
	9322 196 32682	LC171W03-A4K3							6-Jun-03	1-Feb-06	A4K5, C4	9322 211 49682		0		2			0	20mm		17.0"	No	6 CCFL	n.a.
	9322 211 49682	LC171W03-A4K5							18-Feb-05	Mid 2005	LC171W03-C4	9322 221 75682		0		2			0	20mm					
	9322 211 48682	LC171W03-A4KC							11-May-04	Dec'05	no alternative			0		2			0	20mm		17.0"	No	6 CCFL	n.a.
	9322 215 49682	LC171W03-A4KD							not in SAP	Dec'05	no alternative			0		2			0	20mm					
	9322 215 41682	LC171W03-A4KG							not in SAP		no alternative			0		2			0	20mm					
	9322 221 75682	LC171W03-C4							15-Nov-04	Jan '06	no alternative			0		2			0	20mm	15 x 9	17.0"	No	6 CCFL	n.a.
	9322 187 15682	LM171W01-B3							27-Feb-03	Nov '04	no alternative			0		2			0	20mm	LPL notified too late, exchange scenario since Jan '04				
	9965 100 05238	LC190WX1-TLA1	-	-	-	-	-	-														19.0"	No	4 CCFL	n.a.
	9322 254 21682	LC190WX1-TLA1	-	-	-	-	-	-														19.0"	No	4 CCFL	n.a.
	9322 222 90682	LC200WX1-SL01	6632L-0142A		-	-	6871L-0681A		11-Jul-05	Dec '06	no alternative			0		2			0	20mm					
	9322 243 90682	LC200WX1-SLB1	6632L-0299A		-	-	6871L-0822A		not in SAP					0		2			0	20mm					
	9322 197 44682	LC201V02-A3K1							not in SAP		LC201V02-A3N4	9322 211 51682		0		2			0	20mm					
	9322 211 50682	LC201V02-A3K5							not in SAP		no alternative			0		2			0	20mm					
	9322 215 50682	LC201V02-A3K6							27-Sep-04		no alternative			0		2			0	20mm	from fd				
	9322 215 40682	LC201V02-A3K9							9-Aug-04		no alternative			0		2			0	20mm					
	9322 220 99682	LC201V02-A3KB							17-Jun-05	Juli 2006	LC201V02-SDB1	9322 242 65682		0		2			0	20mm					
	9322 211 51682	LC201V02-A3N4							24-Jul-03		A3K1	9322 197 44682		0		2			0	20mm					
	9322 216 39682	LC201V02-A3N8							25-Nov-04	Mid 2005	LC201V02-A3K1 LC201V02-A3K2 LC201V02-A3K5			0		2			0	20mm					
	9322 231 65682	LC201V02-SD02							not in SAP					0		2			0	20mm					
	9322 242 65682	LC201V02-SDB1							26-Jun-06					0		2			0	20mm					
	9322 256 02682	LC201V02-SDC1									LC201V02-A3K1 LC201V02-A3K5											20.1"	No	4 CCFL	n.a.
	9322 258 05682	LC201V02-SDD1																							
	8238 277 14561	LC230W01-A2K4	6632L-0030A		-	-			27-Apr-04	End 2005				0		2			0	20mm		23.0"	Yes	12 CCFL	24V DC
	9322 206 94682	LC230W01-A2K5	6632L-0030A		-	-			not in SAP	Mid 2005	LC230W01-A2K4			0		2			0	20mm		23.0"	Yes	12 CCFL	24V DC
	9322 194 30682	LC230W01-A2K7	6632L-0030B		-	-			20-May-03	Feb '04	LC230W01-A2K8	9322 209 84682		0		2			0	20mm		23.0"	Yes	12 CCFL	24V DC
	9322 209 84682	LC230W01-A2K8	6632L-0030B		-	-			15-Apr-04	Mid 2005	no alternative			0		2			0	20mm		23.0"	Yes	12 CCFL	24V DC
	9322 218 03682	LC230W01-A2KE	6632L-0183A		-	-			12-Jan-05	End 2005				0		2			0	20mm		23.0"	Yes	12 CCFL	24V DC
	9322 213 52682	LC230W01-A2NB	6632L-0030B		-	-			28-Mar-05	End 2005	no alternative			0		3			0	20mm	from fd	23.0"	Yes	12 CCFL	24V DC
	9322 205 71682	LC260W01-A5K1	6632L-0050B		-	-	6871L-0505A		not in SAP	Mid 2005				0		3			0	20mm		26.0"	Yes	14 CCFL	24V DC
	9322 211 03682	LC260W01-A5K4	6632L-0053E		-	-	6871L-0505A		17-Jun-04	Mid 2005	LC260W01-A5K6	9322 212 69682		0		3			0	20mm		26.0"	Yes	14 CCFL	24V DC
	9322 212 69682	LC260W01-A5K6	6632L-0050E		-	-	6871L-0505A		1-Jun-04	Dec '05	LC260W01-A5KA	9322 222 27682		0		3			0	20mm	15 x 9	26.0"	Yes	14 CCFL	24V DC
	9322 220 65682	LC260W01-A5K8	6632L-0050E		-	-	6871L-0505A		13-Dec-04	Dec '05				0		3			0	20mm	15 x 9	26.0"	Yes	14 CCFL	24V DC
	9322 222 27682	LC260W01-A5KA	6632L-0186A		-	-	6871L-0505A		24-Jan-05	Jan '06	no alternative			0		3			0	20mm	15 x 9	26.0"	Yes	14 CCFL	24V DC
	9322 221 01682	LC260WX2-SL01	6632L-0117H	9965 100 05769	6632L-0118H	9965 100 05777	6871L-0672B	9965 100 05785	11-Mar-05	1-Apr-06	LC260WX2-SLB2	9322 234 13682		0		3			0	20mm	Service need to rework the inverter connector to make SL01 compatible in all chassis, there are two versions of the connector in this model. General service info will be made.	26.0"	Yes	18 EEFL	2x 24V DC
	8204 000 79621	LC260WX2-SLB2	6632L-0223G	9965 100 05771	6632L-0224G	9965 100 05779	6871L-0867A	9965 100 05787	20-Mar-06	12-Apr-06				0		3			0	20mm		26.0"	Yes	17 EEFL	2x 24V DC
	8238 277 17391	LC260WX2-SLB2																				26.0"	Yes	17 EEFL	2x 24V DC
	9322 234 13682	LC260WX2-SLB2	6632L-0223G	9965 100 05771	6632L-0224G	9965 100 05779	6871L-0867A	9965 100 05787	12-Apr-06					0		3			0	20mm		26.0"	Yes	17 EEFL	2x 24V DC
	9322 194 18682	LC300W01-A3M2	6633L-0004A		-	-			not in SAP					2		5			5	15mm		30.0"	No	16 CCFL	n.a.
	9322 198 00682	LC300W01-A3P7	6633L-0004B		-	-			16-Feb-04	May '04	LC300W01-C5			2		5			5	15mm		30.0"	No	16 CCFL	n.a.
	9322 199 94682	LC300W01-A5	6632L-0032B		-	-	6871L-0514A		27-May-03	Feb '04	LC300W01-C5			2		5			5	15mm		30.0"	No	16 CCFL	n.a.
	9322 206 53682	LC300W01-C5	6632L-0035A		-	-	6871L-0540A		26-Feb-04		no alternative			2		5			5	15mm	see note	30.0"	No	16 CCFL	n.a.
	8238 277 17361	LC320W01-A6K1	6632L-0189A	9965 100 08448	6632L-0190A	9965 100 08454	6871L-0673A	9965 100 05789	15-Apr-05		LC320W01-A6K1	9322 217 44682		0		3			0	20mm		31.5"	Yes	20 EEFL	24V DC
	9322 217 44682	LC320W01-A6K1	6632L-0189A	9965 100 08448	6632L-0190A	9965 100 08454	6871L-0673A	9965 100 05789	29-Sep-04	Mid 2005	LC320W01-SL01 LC320W01-SL06	9322 229 23682 9322 230 03682	3122 785 01000	0		3			0	20mm	Service need to rework the inverter connector to make SL01 compatible in all chassis, there are two versions of the connector in this model.	31.5"	Yes	20 EEFL	24V DC
	8238 277 18481	LC320W01-SL01	6632L-0211A	9965 100 05772	6632L-0212A	9965 100 05780	6871L-0796A	9965 100 05788	17-Aug-05					0		3			0	20mm		31.5"	Yes	18 EEFL	24V DC
	8238 277 20861	LC320W01-SL01	6632L-0211A	9965 100 05772	6632L-0212A	9965 100 05780	6871L-0796A	9965 100 05788	24-Jul-06					0		3			0	20mm		31.5"	Yes	18 EEFL	24V DC
	9322 229 23682	LC320W01-SL01	6632L-0211A	9965 100 05772	6632L-0212A	9965 100 05780	6871L-0796A	9965 100 05788	15-Aug-05	April '06	LC320W01-SL06	9322 230 03682	3122 785 01000	0		3			0	20mm	12 pin inverter connector	31.5"	Yes	18 EEFL	24V DC
	8204 000 79101	LC320W01-SL02	6632L-0209A	9965 100 06813	6632L-0210A	9965 100 06823	6871L-0796A	9965 100 05788	not in SAP		LC320W01-SL02	9322 231 56682		0		3			0	20mm		31.5"	Yes	18 EEFL	24V DC
	9322 231 56682	LC320W01-SL02	6632L-0209A	9965 100 06813	6632L-0210A	9965 100 06823	6871L-0796A	9965 100 05788	17-Mar-06	1-Mar-06				0		3			0	20mm		31.5"	Yes	18 EEFL	24V DC
	9322 230 03682	LC320W01-SL06	6632L-0272A	9965 100 05766	6632L-0273A	9965 100 05774	6871L-0796A	9965 100 05788	25-Nov-05					0		3			0	20mm	14 pin inverter connector for PWM backlicht				
	8204 001 50961	LC320WX1-SLB1	6632L-0324A	9965 100 08041	6632L-0325A	9965 100 08043	6871L-0990A	9965 100 08044	not in SAP													31.5"	Yes	14 EEFL	24V DC
	9322 253 93682	LC320WX1-SLB1	6632L-0324A	9965 100 08041	6632L-0325A	9965 100 08043	6871L-0990A	9965 100 08044														31.5"	Yes	14 EEFL	24V DC
	8204 000 78151	LC320WX2-SL01	-	-	-	-	6871L-0800A		23-Jan-06	7-Apr-06	LC320WX2-SL01	9322 241 46682		0		3			0	20mm		31.5"	Yes	? HCFL	295V DC
	9322 241 46682	LC320WX2-SL01	-	-	-	-	6871L-0800A		7-Apr-06	June '07	no alternative			0		3			0	20mm		31.5"	Yes	? HCFL	295V DC
	8204 001 51341	LC320WX5-SLB1	6632L-0446A		-	-	6871L-1141A		5-Apr-07													31.5"	Yes	14 EEFL	24V DC
	9322 254 56682	LC320WX5-SLB1	6632L-0446A		-	-	6871L-1141A		not in SAP													31.5"	Yes	14 EEFL	24V DC
	8204 001 51841	LC320WX5-SLB2	6632L-0421A	9965 100 08358	-	-	6871L-1242A	9965 100 08364	not in SAP													31.5"	Yes	14 EEFL	24V DC
	9322 256 41682	LC320WX5-SLB2	6632L-0421A	9965 100 08358	-	-	6871L-1242A	9965 100 08364														31.5"	Yes	14 EEFL	24V DC
	9322 258 34682	LC320WXN-SAB1																				31.5"	Yes	12 EEFL	24V DC
	9322 206 52682	LC370W01-A5	6632L-0191A	9965 100 06814	6632L-0192A	9965 100 06824	6871L-0547A		27-Apr-04		LC370WX1-SL02	9322 231 55682		0		6			0	20mm		37.0"	Yes	16 CCFL	24V DC
	9322 216 64682	LC370W01-A5K1	6632L-0191A	9965 100 06814	6632L-0192A	9965 100 06824	6871L-0586A		26-Oct-04		LC370WX1-SL02	9322 231 55682		0		6			0	20mm	from fd	37.0"	Yes	16 CCFL	24V DC
	9322 220 87682	LC370W01-A6	6632L-0191A	9965 100 06814	6632L-0192A	9965 100 06824	6871L-0662A	9965 100 06915	26-Mar-05	Oct '05	LC370WX1-SL02	9322 231 55682		0		6			0	20mm	from fd	37.0"	Yes	16 CCFL	24V DC
	8204 001 51561	LC370WU1-SL02	6632L-0239A	9965 100 09693	6632L-0240A	9965 100 09694	6871L-1185A	9965 100 09695	not in SAP																
	9965 100 02596	LC370WU1-SL02	6632L-0239A	9965 100 09693	6632L-0240A	9965 100 09694	6871L-1185A	9965 100 09695																	
	8204 001 51391	LC370WU2-SLA1	6632L-0402A		6632L-0403A		6871L-1044A		not in SAP		LC370WU2-SLA1	9322 255 82682										37.0"	Yes	? CCFL	24V DC
	9322 255 82682	LC370WU2-SLA1	6632L-0402A		6632L-0403A		6871L-1044A															37.0"	Yes	? CCFL	24V DC
	8204 001 51711	LC370WU3-SLE1	6632L-0464A	9965 100 08359	-	-	6871L-1280A	9965 100 08365			LC370WU3-SLE1	9322 256 61682										37.0"	Yes	? EEFL	24V DC
	9322 256 61682	LC370WU3-SLE1	6632L-0464A	9965 100 08359	-	-	6871L-1280A	9965 100 08365														37.0"	Yes	? EEFL	24V DC
	8204 000 79161	LC370WX1-SL02	6632L-0199D	9965 100 06815	6632L-0200D	9965 100 06825	6871L-0801A	9965 100 05786	not in SAP		LC370WX1-SL02	9322 231 55682		0		6			0	20mm		37.0"	Yes	20 EEFL	24V DC
	9322 231 55682	LC370WX1-SL02	6632L-0199D	9965 100 06815	6632L-0200D	9965 100 06825	6871L-0801A	9965 100 05786	11-Nov-05	April '06				0		6			0	20mm	28/10 UFD	37.0"	Yes	20 EEFL	24V DC
	9322 233 19682	LC370WX1-SL04	6632L-0282A	9965 100 05770	6632L-0283A	9965 100 05778	6871L-0801A	9965 100 05786	7-Apr-06		LC370WX1-SLB1	9322 246 96682		0		6			0	20mm	The LC370WX1- SL04 is not backwards compatible with the LC370WX1-SL02 (used in 37PF7321D/37). The software and the inverter cable needs to be changed. The inverter pinning for the SL02 is 12 pins and for the SL04 it is 14 pins. 10/11 MFD	37.0"	Yes	20 EEFL	24V DC

	9322 246 96682	LC370WX1-SLB1	6632L-0330A	9965 100 06816	6632L-0331A	9965 100 06826	6871L-0896A	9965 100 06916	19-Jan-07	aug. '07													37.0"	Yes	20 EEFL	24V DC
	9322 253 94682	LC370WX4-SLB1	6632L-0456A	9965 100 08042	-	-	6871L-1219A	9965 100 08045															37.0"	Yes	16 EEFL	24V DC
	9322 254 20682	LC370WX5-SLB1																					37.0"	No	18 EEFL	n.a.
	9322 258 35682	LC370WXE-SAA1																					37.0"	No	18 EEFL	n.a.
	9322 206 51682	LC420W02-A4	6632L-0039A	9965 100 08449	6632L-0039B	9965 100 08455	6871L-0532A	9965 100 08460	26-Feb-04	March-'06	LC420W02-A6	9322 226 39682		0	1	6			0	10mm	entered 290905 Not in LSDB	42.0"	Yes	20 CCFL	24V DC
	9322 211 11682	LC420W02-A4K3	6632L-0051A	9965 100 06817	6632L-0051B	9965 100 06910	6871L-0532B	9965 100 06917	12-May-04	1-Jan-06	LC420W02-A6	9322 226 39682		0	1	6			0	10mm	entered 290905	42.0"	Yes	20 CCFL	24V DC
	9322 226 39682	LC420W02-A6	6632L-0051A	9965 100 06817	6632L-0051B	9965 100 06910	6871L-0595A	9965 100 06918	2-Sep-05	1-Mar-06	LC420W02-SLB1	9322 234 12682	3122 785 00940	0	1	6			0	10mm	entered 290905	42.0"			
	8238 277 18421	LC420W02-B6	6632L-0051A	9965 100 06817	6632L-0051B	9965 100 06910	6871L-0594A		28-Jun-05																	
	8238 277 20851	LC420W02-SLA1	6632L-0153C	9965 100 08450	6632L-0154C	9965 100 08456	6871L-0780C	9965 100 08461	24-Jul-06																	
	8204 000 79841	LC420W02-SLB1	6632L-0153C	9965 100 08450	6632L-0154C	9965 100 08456	6871L-0780C	9965 100 08461	not in SAP		LC420W02-SLB1	9322 234 12682								10mm		42.0"	Yes	20 CCFL	24V DC
	9322 234 12682	LC420W02-SLB1	6632L-0153C	9965 100 08450	6632L-0154C	9965 100 08456	6871L-0780C	9965 100 08461	24-Mar-06	6-Nov-06	no alternative			0	1	6			0	10mm	The LC420W02-SLB1 is not backwards compatible with the LC420W02-A6 (used in 42PF7421D/37). The software and the inverter cable needs to be changed. The inverter pinning for the A6 is 12 pins and for the SLB1 it is 14 pins.	42.0"	Yes	20 CCFL	24V DC
	8204 000 78581	LC420WU1-SL01	6632L-0213A	9965 100 08451	6632L-0214A	9965 100 08457	6871L-0729B	9965 100 08462	not in SAP	1-Sep-05	LC420WU1-SL01	9322 228 99682		0	1	6		7	1	10mm		42.0"	Yes	22 CCFL	24V DC
	9322 228 99682	LC420WU1-SL01	6632L-0213A	9965 100 08451	6632L-0214A	9965 100 08457	6871L-0729B	9965 100 08462	1-Sep-05	6-Nov-06	no alternative			0	1	6		7	1	10mm	HD panels entered 5-10-28	42.0"	Yes	22 CCFL	24V DC
	8204 001 50951	LC420WU1-SLA1	6632L-0213A	-	6632L-0214A	-	6871L-0789A	-	not in SAP											10mm					
	8204 001 50441	LC420WU2-SLA1	6632L-0348A	9965 100 05767	6632L-0349A	9965 100 05775	6871L-0959A	9965 100 05783	6-Oct-06	7-Oct-06	LC420WU2-SLA1	9322 246 84682		0	1	6			0	10mm		42.0"	Yes	20 CCFL	24V DC
	9322 246 84682	LC420WU2-SLA1	6632L-0348A	9965 100 05767	6632L-0349A	9965 100 05775	6871L-0959A	9965 100 05783	7-Oct-06		LC420WU2-SLB1	9322 251 68682		0	1	6			0	10mm		42.0"	Yes	20 CCFL	24V DC
	9322 252 09682	LC420WU2-SLA2	6632L-0348B	9965 100 06818	6632L-0349B	9965 100 06911	6871L-0959A	9965 100 05783	April '07		LC420WU2-SLA1	9322 246 84682										42.0"	Yes	20 CCFL	24V DC
	9322 251 68682	LC420WU2-SLB1	6632L-0381A	9965 100 08452	6632L-0382A	9965 100 08458	6871L-1088A	9965 100 08463	6-Apr-07		no alternative														
	8204 001 51191	LC420WU4-SLA1	-	-	-	-	-	-	not in SAP		no alternative														
	8204 001 51361	LC420WU4-SLB1	6632L-0454A	9965 100 08360	6632L-0455A	9965 100 08362	6871L-1254A	9965 100 08366	not in SAP		LC420WU4-SLB1	9322 255 58682										42.0"	Yes	? CCFL	24V DC
	9322 255 58682	LC420WU4-SLB1	6632L-0454A	9965 100 08360	6632L-0455A	9965 100 08362	6871L-1254A	9965 100 08366			no alternative											42.0"	Yes	? CCFL	24V DC
	8204 001 50921	LC420WU5-SLA1	6632L-0470A	9965 100 07721	6632L-0471A	9965 100 07722	6871L-1246A	9965 100 08367	not in SAP		LC420WU5-SLA1	9322 255 96682		0	1	6			0	10mm		42.0"	Yes	? EEFL	24V DC
	9322 255 96682	LC420WU5-SLA1	6632L-0470A	9965 100 07721	6632L-0471A	9965 100 07722	6871L-1246A	9965 100 08367			no alternative											42.0"	Yes	? EEFL	24V DC
	8204 001 51701	LC420WU5-SLB1	6632L-0470A	9965 100 07721	6632L-0471A	9965 100 07722	6871L-1259A	9965 100 07723			LC420WU5-SLB1	9322 256 62682										42.0"	Yes	? EEFL	24V DC
	9322 256 62682	LC420WU5-SLB1	6632L-0470A	9965 100 07721	6632L-0471A	9965 100 07722	6871L-1259A	9965 100 07723			no alternative											42.0"	Yes	? EEFL	24V DC
	9322 258 39682	LC420WUE-SAA1																					42.0"	No	18 EEFL	n.a.
	8204 001 52321	LC420WUF-SAA1																					42.0"	No	18 EEFL	n.a.
	9322 258 45682	LC420WUF-SAA1																					42.0"	No	18 EEFL	n.a.
	8204 000 79241	LC420WX2-SLA1	-	-	-	-	6871L-0828A	9965 100 07324	29-Mar-06	1-Apr-06	LC420WX2-SLA1	9322 240 80682		0	1	6			0	10mm	compatible with A6 -but C.Ratio= 800:1. 10/11 UFD	42.0"	No	? HCFL	n.a.
	9322 240 80682	LC420WX2-SLA1	-	-	-	-	6871L-0828A	9965 100 07324	5-Apr-06		no alternative			0	1	6			0	10mm		42.0"	No	? HCFL	n.a.
	8204 001 50431	LC420WX3-SLA1	6632L-0330A	9965 100 06816	6632L-0331A	9965 100 06826	6871L-0920A	9965 100 08464	6-Oct-06		LC420WX3-SLA1	9322 246 97682		0	1	6			0	10mm		42.0"	Yes	20 CCFL	24V DC
	8238 277 21011	LC420WX3-SLA1	6632L-0330A	9965 100 06816	6632L-0331A	9965 100 06826	6871L-0920A	9965 100 08464			LC420WX3-SLA1	9322 246 97682										42.0"	Yes	20 CCFL	24V DC
	9322 246 97682	LC420WX3-SLA1	6632L-0330A	9965 100 06816	6632L-0331A	9965 100 06826	6871L-0920A	9965 100 08464	18-Oct-06	April '07	LC420WX5-SLD1	9322 249 09682		0	1	6			0	10mm		42.0"	Yes	20 CCFL	24V DC
	8204 001 51001	LC420WX5-SLD1	6632L-0371D	9965 100 06819	6632L-0372D	9965 100 06912	6871L-2978A	9965 100 06919	not in SAP		LC420WX5-SLD1	9322 249 09682		0	1	6			0	10mm		42.0"	Yes	18 CCFL	24V DC
	9322 249 09682	LC420WX5-SLD1	6632L-0371D	9965 100 06819	6632L-0372D	9965 100 06912	6871L-2978A	9965 100 06919	27-Feb-07					0	1	6			0	10mm		42.0"	Yes	18 CCFL	24V DC
	9322 253 95682	LC420WX7-SLB1	6632L-0448C		6632L-0449C		6871L-1150A				no alternative												42.0"	Yes	18 EEFL	24V DC
	9322 254 17682	LC420WX8-SLB1	-	-	-	-	6871L-1190B				no alternative			0	10 (<50%)	7	5 D<1.0mm			15mm	New pixel spec. "A" rating.	42.0"	No	18 EEFL	n.a.
	9322 258 36682	LC420WXE-SAA1																					42.0"	No	18 EEFL	n.a.
	8204 001 50421	LC470WU1-SLC2	6632L-0359B	9965 100 06863	6632L-0360B	9965 100 06938	6871L-0863C	9965 100 06920	not in SAP	30-Nov-06	LC470WU1-SLC2	9322 248 50682										47.0"	Yes	24 CCFL	24V DC
	9322 248 50682	LC470WU1-SLC2	6632L-0359B	9965 100 06863	6632L-0360B	9965 100 06938	6871L-0863C	9965 100 06920	30-Nov-06		no alternative											47.0"	Yes	24 CCFL	24V DC
	8204 001 51131	LC470WU2-SLA1	6632L-0404A	9965 100 06821	6632L-0405A	9965 100 06913	6871L-1198A	9965 100 06921	5-Apr-07		LC470WU2-SLA1	9322 255 57682										47.0"	Yes	? CCFL	24V DC
	9322 255 57682	LC470WU2-SLA1	6632L-0404A	9965 100 06821	6632L-0405A	9965 100 06913	6871L-1198A	9965 100 06921			no alternative											47.0"	Yes	? CCFL	24V DC
	8204 001 51351	LC470WU2-SLB1	6632L-0404B	9965 100 08361	6632L-0405B	9965 100 08363	6871L-1198C	9965 100 08368	not in SAP		LC470WU2-SLB1	9322 256 66682										47.0"	Yes	? CCFL	24V DC
	9322 256 66682	LC470WU2-SLB1	6632L-0404B	9965 100 08361	6632L-0405B	9965 100 08363	6871L-1198C	9965 100 08368			no alternative											47.0"	Yes	? CCFL	24V DC
	8204 001 51121	LC470WU4-SLA2	6632L-0392B	9965 100 06822	6632L-0393B	9965 100 06914	6871L-1023A	9965 100 06922	19-Feb-07		LC470WU4-SLA2	9322 250 20682										47.0"	Yes	23 CCFL	24V DC
	9322 250 20682	LC470WU4-SLA2	6632L-0392B	9965 100 06822	6632L-0393B	9965 100 06914	6871L-1023A	9965 100 06922	1-Mar-07		no alternative											47.0"	Yes	23 CCFL	24V DC
	8204 001 50931	LC470WU6-SLA1							not in SAP		no alternative															
	9322 258 37682	LC470WUE-SAA1																					47.0"	No	22 CCFL	n.a.
	8204 001 52311	LC470WUF-SAA1																					47.0"	No	22 CCFL	n.a.
	9322 258 38682	LC470WUF-SAA1																					47.0"	No	22 CCFL	n.a.
	9322 253 31682	LC470WX1-SLA2	6632L-0424C	9965 100 08453	6632L-0425C	9965 100 08459	6871L-1116B	9965 100 08465	not in SAP		LC470WX1-SLA1														